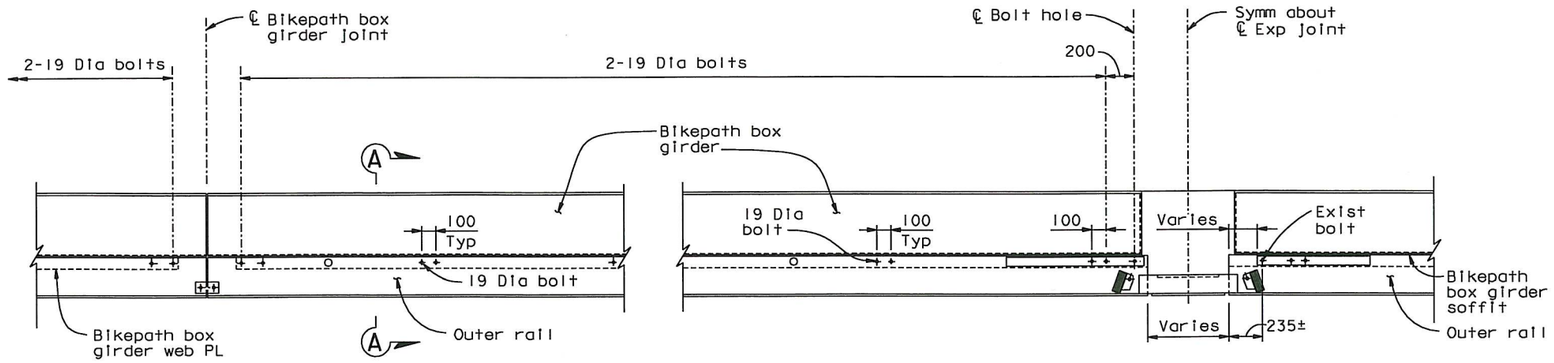

TYPICAL RAIL

AT EXPANSION JOINT

OUTER RAIL ELEVATION

1:20

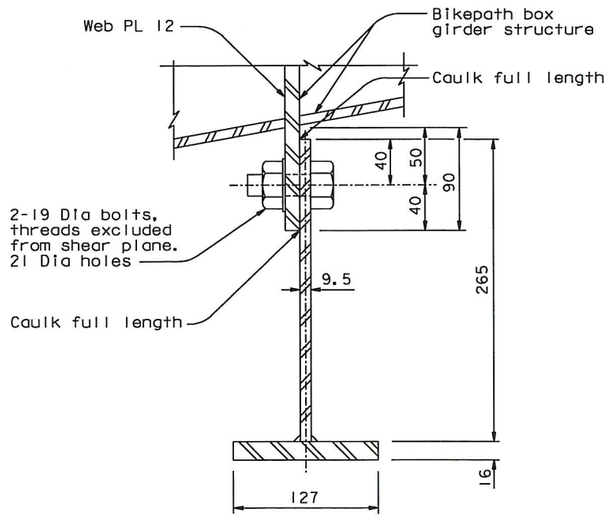

SECTION A-A

OUTER RAIL DETAILS

1:2.5

ADDITIONAL BOLT INSTALLATION PROCEDURE:

1. Install additional 19 Dia bolt 100 mm from existing 19 Dia bolt.
2. Caulk outer rail to Web PL 12 at top and bottom.

NOTES:

1. Bolts
   a) All bolts to be ASTM grade A325, unless noted otherwise.
   b) Fabricator is to supply a nut and one hardened washer with each bolt unless noted otherwise.
   c) All bolts, nuts, & washers are to be galvanized.
   d) All 19 Dia bolts shall be imperial (3/4 inch) size.
2. Caulk shall be non-silicone type sealing compound conforming to the requirements in Federal Specification TT-S-230, Type II.
3. Contractor shall field verify all dimensions.

100% PS&E

CONTRACT CHANGE ORDER NO. 178
SHEET 3 OF 6

REQUESTS FOR INFORMATION NOT ADDRESSED IN THIS CCO REMAIN IN FORCE

ALL DIMENSIONS ARE IN MILLIMETERS UNLESS OTHERWISE SHOWN

DIST.	COUNTY	ROUTE	KILOMETER POST TOTAL PROJECT	SHEET NO.	TOTAL SHEETS
04	SF, Ala	80	13.9/14.3, 0.0/2.7	1164S2	1204

REGISTERED ENGINEER - CIVIL
Tien Hung Ho, No. C 43990, Exp. 06/30/11, CIVIL
REGISTERED PROFESSIONAL ENGINEER — STATE OF CALIFORNIA
03-28-11
PLANS APPROVAL DATE

The State of California or its officers or agents shall not be responsible for the accuracy or completeness of electronic copies of this plan sheet.

T.Y. LIN / MOFFATT & NICHOL
TWO HARRISON STREET
SAN FRANCISCO, CA 94105

Caltrans now has a web site! To get to the web site, go to: http://www.dot.ca.gov

MARK	DATE	REVISIONS	BY	CH'D	CCO#
0	03/28/11	SKYWAY BIKEPATH TRAVELER COMPLETION WORK	TH	JD	178

	BY	CHECKED
DESIGN	T. Ho	J. Duxbury
DETAILS	T. Ho	J. Duxbury
QUANTITIES	T. Ho	J. Duxbury

W. Long, Y. Liu
DESIGN OVERSIGHT
SIGN OFF DATE 03/28/11

PREPARED FOR THE STATE OF CALIFORNIA DEPARTMENT OF TRANSPORTATION

R. Manzanarez
PROJECT ENGINEER

BRIDGE NO. 34-0006L/R
KILOMETER POST 13.9/14.3, 0.0/2.7

SAN FRANCISCO OAKLAND BAY BRIDGE
EAST SPAN SEISMIC SAFETY PROJECT

SKYWAY CLEANUP ITEMS

ADDITIONAL BOLT INSTALLATION

Rev. Date: 5-18-98

ORIGINAL SCALE IN MILLIMETERS FOR REDUCED PLANS 0 10 20 30 40 50 60 70 80 90 100

CU 04
EA 0120F1

DISREGARD PRINTS BEARING EARLIER REVISION DATES →

REVISION DATES (PRELIMINARY STAGE ONLY): 03/28/11

SHEET 747S2 OF

FILE => I:\bb\04-012001\sas\contract plans and cco\cco\cco#178\1-original 03-28-11\dgn\aktpd09_2.dgn

USERNAME => DWinrow

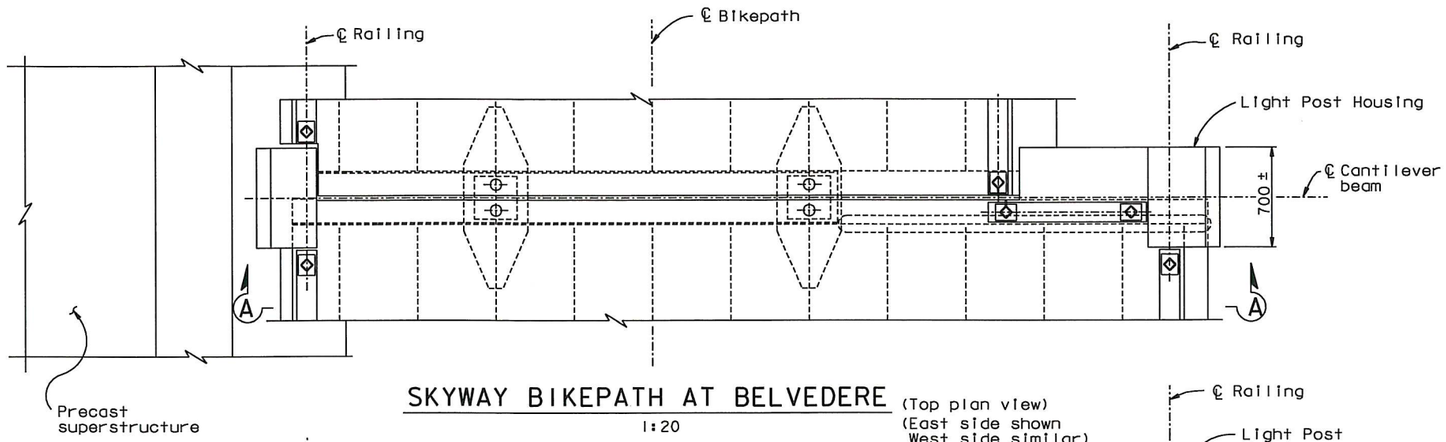

SKYWAY BIKEPATH AT BELVEDERE

(Top plan view)
(East side shown
West side similar)

1:20

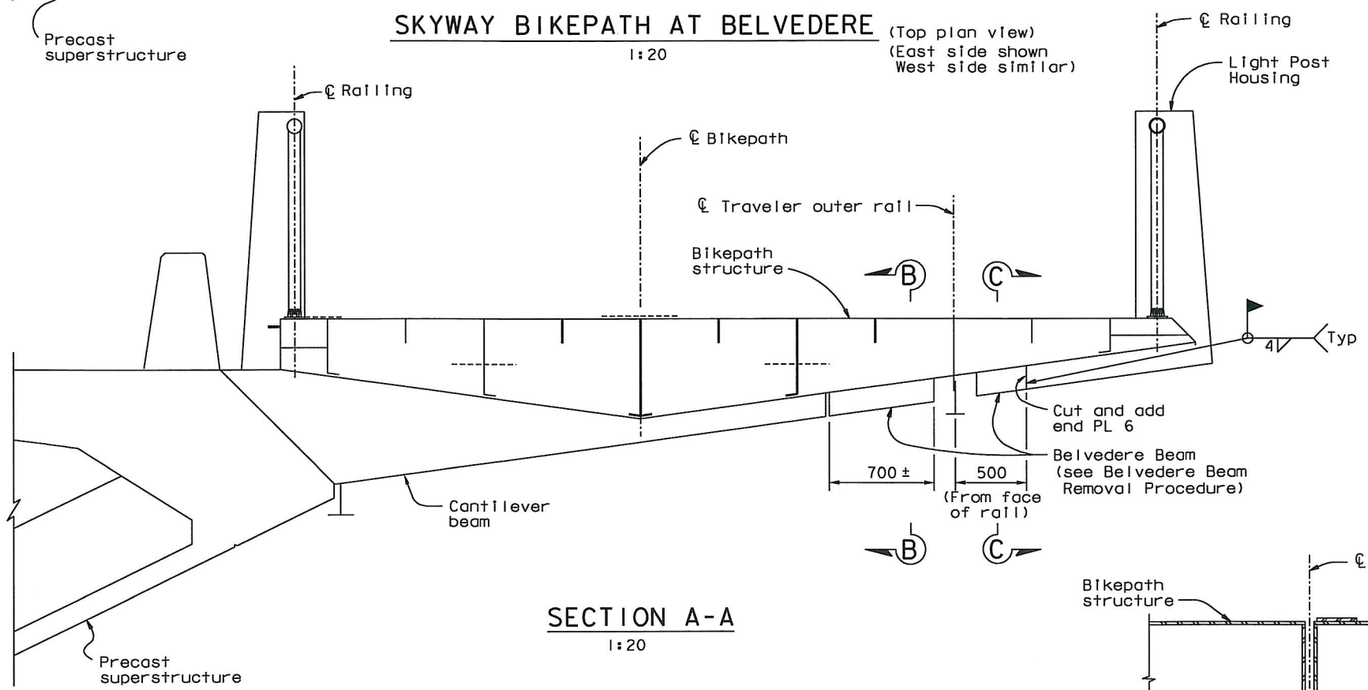

SECTION A-A

1:20

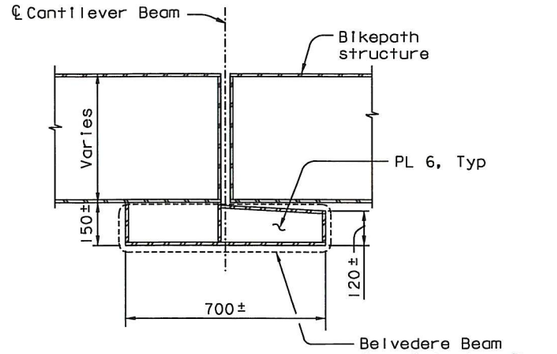

SECTION B-B

1:10

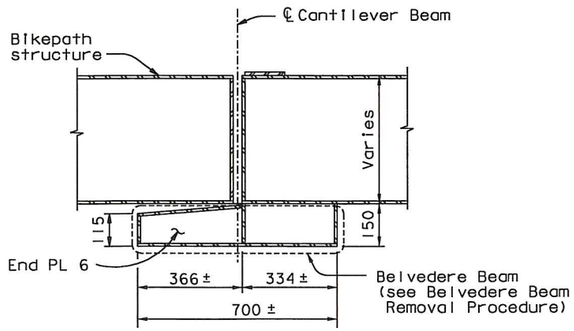

SECTION C-C

1:10

BELVEDERE BEAM REMOVAL PROCEDURE:

1. Install protective cover on traveler rail.
2. Remove portions of Belvedere Beam. Cut line shall be 10 mm away from the permanent structure or as otherwise approved by the Engineer.
3. Removal of steel shall not damage the remainder of the steel structure materials.
4. Steel surface shall be ground flush and damaged areas shall be repaired in accordance with the requirements of ANSI/AASHTO/AWS D1.5.
5. Cover opening in Belvedere Beam with an end PL 6. The edges of beam shall be squared, plumb and ground smooth prior to welding end PL.
6. Areas with damaged paint or with no paint shall be cleaned and painted.

NOTES:

1. 2 existing Belvedere Beams shall be removed at Pier 4E, 6E, 8E, 10E and 12E.
2. Contractor shall field verify all dimensions.

100 % PS&E

DIST.	COUNTY	ROUTE	KILOMETER POST TOTAL PROJECT	SHEET NO.	TOTAL SHEETS
04	SF, Ala	80	13.9/14.3, 0.0/2.7	11643	1204

REGISTERED ENGINEER - CIVIL
Tien Hung Ho
No. C 43990
Exp. 06/30/11
CIVIL
REGISTERED PROFESSIONAL ENGINEER
STATE OF CALIFORNIA

03-28-11
PLANS APPROVAL DATE

The State of California or its officers or agents shall not be responsible for the accuracy or completeness of electronic copies of this plan sheet.

T.Y. LIN / MOFFATT & NICHOL
TWO HARRISON STREET
SAN FRANCISCO, CA 94105

Caltrans now has a web site! To get to the web site, go to: http://www.dot.ca.gov

CONTRACT CHANGE ORDER NO. 178
SHEET 4 OF 6

REQUESTS FOR INFORMATION NOT ADDRESSED IN THIS CCO REMAIN IN FORCE

ALL DIMENSIONS ARE IN MILLIMETERS UNLESS OTHERWISE SHOWN

W. Long, Y. Liu
DESIGN OVERSIGHT
SIGN OFF DATE 03/28/11

MARK	DATE	REVISIONS	BY	CH'D	CCO#
0	03/28/11	SKYWAY BIKEPATH TRAVELER COMPLETION WORK	TH	JD	178

	BY	CHECKED
DESIGN	T. Ho	J. Duxbury
DETAILS	T. Ho	J. Duxbury
QUANTITIES	T. Ho	J. Duxbury

PREPARED FOR THE STATE OF CALIFORNIA
DEPARTMENT OF TRANSPORTATION

R. Manzanarez
PROJECT ENGINEER

BRIDGE NO. 34-0006L/R
KILOMETER POST 13.9/14.3, 0.0/2.7

SAN FRANCISCO OAKLAND BAY BRIDGE
EAST SPAN SEISMIC SAFETY PROJECT

SKYWAY CLEANUP ITEMS

BELVEDERE BEAM REMOVAL

Rev. Date: 5-18-98

ORIGINAL SCALE IN MILLIMETERS FOR REDUCED PLANS 0 10 20 30 40 50 60 70 80 90 100

CU 04
EA 0120F1

DISREGARD PRINTS BEARING EARLIER REVISION DATES →

REVISION DATES (PRELIMINARY STAGE ONLY): 03/28/11

SHEET 74753 OF

FILE => I:\bb\04-012001\sas\contract plans and cco\cco\cco#178\1-original 03-28-11\dgn\akbwd01a.dgn

USERNAME => DWithrow

DIST.	COUNTY	ROUTE	KILOMETER POST TOTAL PROJECT	SHEET NO.	TOTAL SHEETS
04	SF, Ala	80	13.9/14.3, 0.0/2.7	1164S4	1204

Caltrans Metric

REGISTERED ENGINEER - CIVIL

03-28-11
PLANS APPROVAL DATE

REGISTERED PROFESSIONAL ENGINEER Tien Hung Ho No. C 43990 Exp. 06/30/11 CIVIL STATE OF CALIFORNIA

The State of California or its officers or agents shall not be responsible for the accuracy or completeness of electronic copies of this plan sheet.

T.Y. LIN / MOFFATT & NICHOL
TWO HARRISON STREET
SAN FRANCISCO, CA 94105

Caltrans now has a web site! To get to the web site, go to: http://www.dot.ca.gov

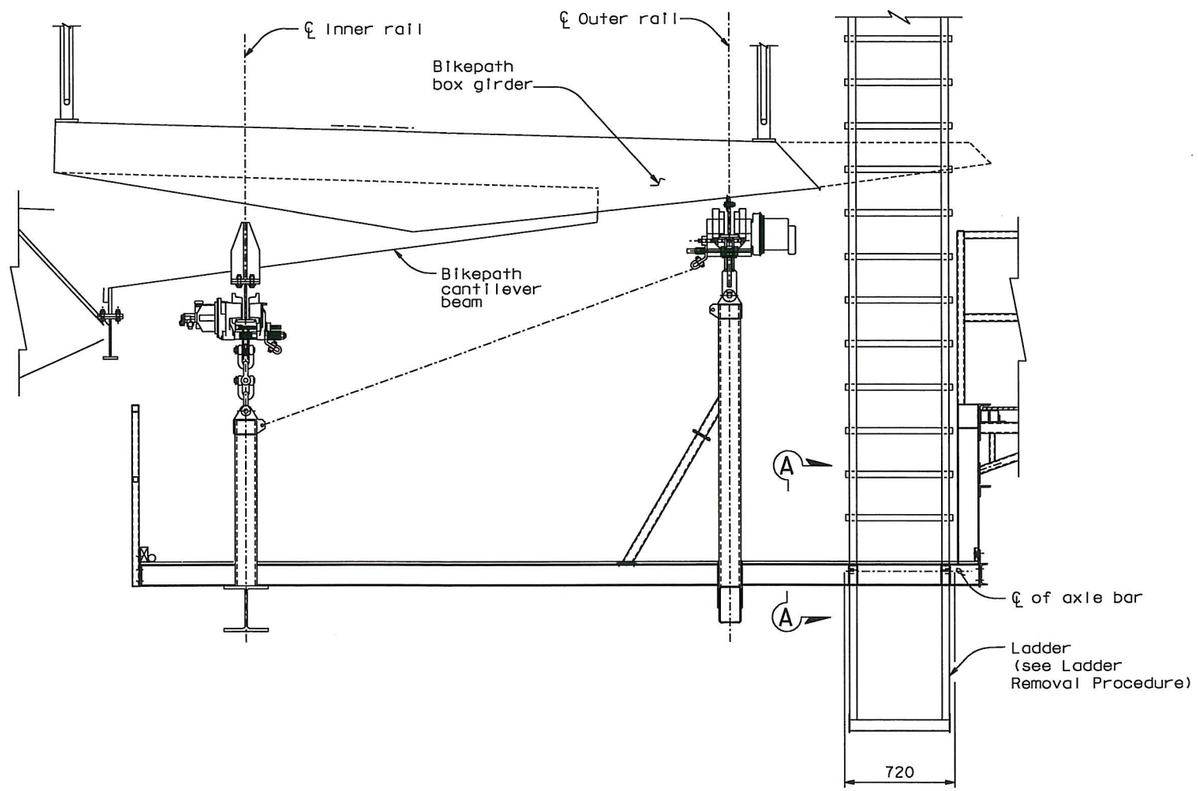

SKYWAY BIKEPATH TRAVELER
1:20

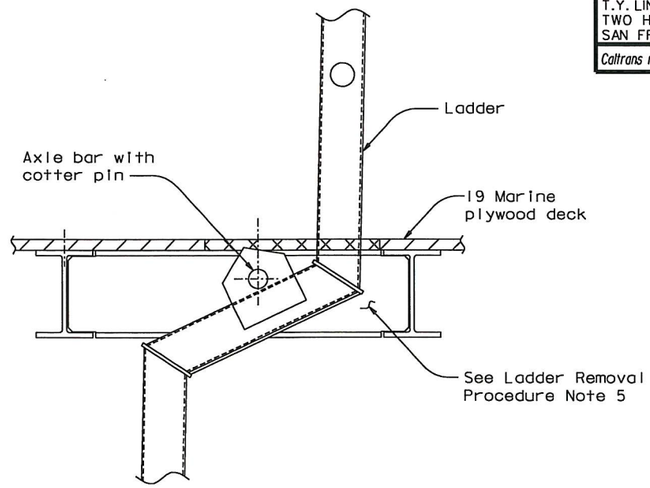

SECTION A-A
1:5

LADDER REMOVAL PROCEDURE:

1. Remove cotter pin and axle bar.
2. Remove existing fold down ladder and all of its attached components.
3. Plywood decking and toeboards shall be replaced in their entirety. Plywood decking shall conform to or exceed the requirements of U.S. Product Standard PS-1-9S for APA Structural 1 AB Marine Grade. Plywood shall be pressure treated. Plywood decking shall be painted on all sides.

   Wooden toeboards shall be pressure treated S4S Douglas Fir. Toeboards shall be painted on all sides.
4. Plywood decking shall be attached using blind rivets. Blind rivets shall be stainless steel, 4.8 mm diameter and shall be installed at 305 mm maximum on center.
5. Areas with damaged paint or with no paint shall be cleaned and painted. Any damage to the galvanized surfaces shall be repaired with zinc rich primer. Galvanized surfaces shall be finish painted.

NOTES:

1. Total Units: 2 Travelers.
2. Contractor shall field verify all dimensions.

100 % PS&E

CONTRACT CHANGE ORDER NO. 178
SHEET 5 OF 6

REQUESTS FOR INFORMATION NOT ADDRESSED IN THIS CCO REMAIN IN FORCE

ALL DIMENSIONS ARE IN MILLIMETERS UNLESS OTHERWISE SHOWN

SAN FRANCISCO OAKLAND BAY BRIDGE
EAST SPAN SEISMIC SAFETY PROJECT

SKYWAY CLEANUP ITEMS

LADDER REMOVAL

W. Long, Y. Liu
DESIGN OVERSIGHT
Wengi Long / Y Liu
SIGN OFF DATE 03/28/11

MARK	DATE	DESCRIPTIONS	BY	CH'D	CCO#
0	03/28/11	SKYWAY BIKEPATH TRAVELER COMPLETION WORK	TH	JD	178

REVISIONS

	BY	CHECKED
DESIGN	T. Ho	J. Duxbury
DETAILS	T. Ho	J. Duxbury
QUANTITIES	T. Ho	J. Duxbury

PREPARED FOR THE STATE OF CALIFORNIA DEPARTMENT OF TRANSPORTATION

R. Manzanarez
PROJECT ENGINEER

BRIDGE NO. 34-0006L/R
KILOMETER POST 13.9/14.3, 0.0/2.7

Rev. Date: 5-18-98

ORIGINAL SCALE IN MILLIMETERS FOR REDUCED PLANS 0 10 20 30 40 50 60 70 80 90 100

CU 04
EA 0120F1

DISREGARD PRINTS BEARING EARLIER REVISION DATES 03/28/11

REVISION DATES (PRELIMINARY STAGE ONLY)

SHEET 747S4 OF

USERNAME => DWinrow

FILE => I:\bb\04-012001\sas\contract plans and cco\cco\cco#178\1-original 03-28-11\dgn\aktpd08_3.dgn

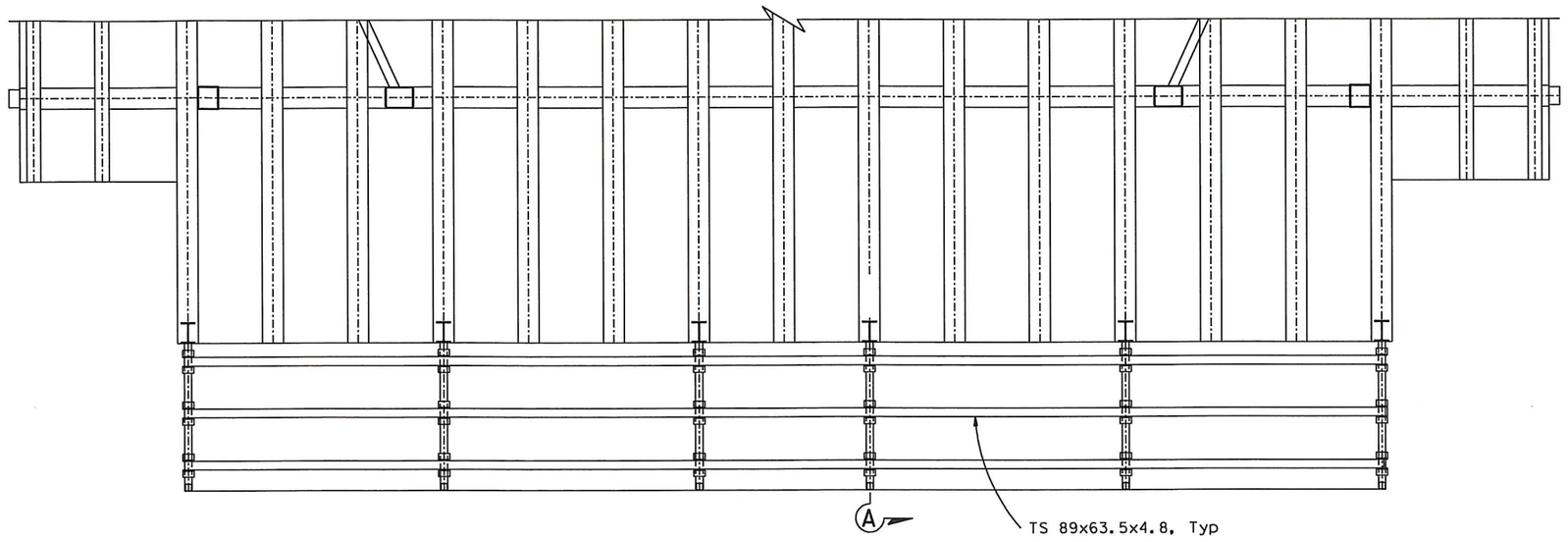

PARTIAL PLAN
1:20

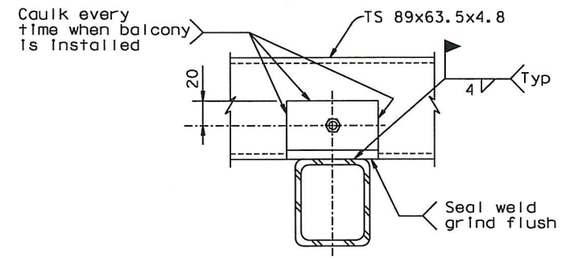

SECTION B-B
1:2.5

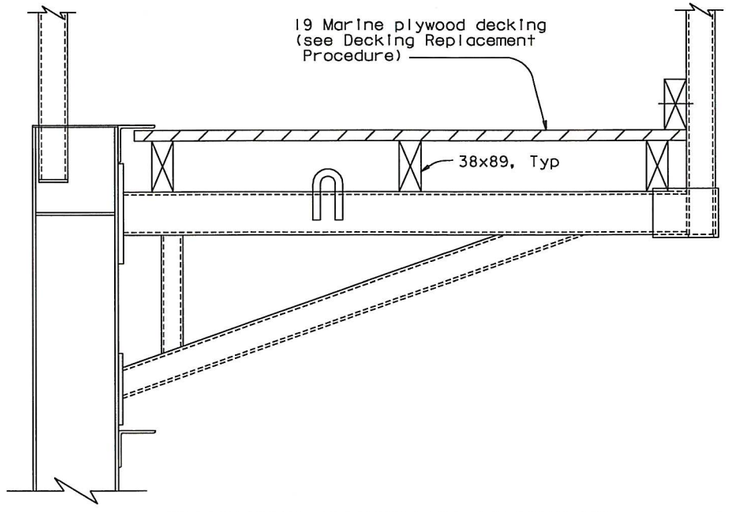

EXISTING BIKEPATH TRAVELER BELVEDERE BALCONY DECKING
1:5

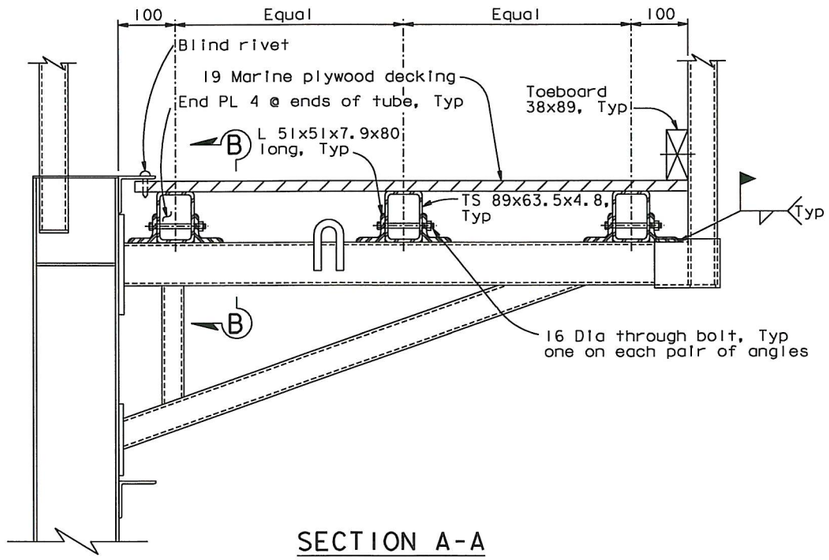

SECTION A-A
NEW BIKEPATH TRAVELER BELVEDERE BALCONY DECKING
1:5

DECKING REPLACEMENT PROCEDURE:

1. Remove Marine plywood and 38x89 lumber.
2. Install structural angles and tubing. Tube sections to be ASTM A500 Grade C or ASTM A300 Grade B with mill certificates satisfying Grade C Fy & Fu, subject to review and approval of the Engineer. Angles to be ASTM A572 Grade 42 or ASTM A709 Grade 345.
3. Bolts
   a) All bolts to be ASTM grade A325, unless noted otherwise
   b) Fabricator is to supply a nut and one hardened washer with each bolt unless noted otherwise.
   c) All bolts, nuts, and washers are to be galvanized.
   d) All 16 Dia bolts shall be imperial (5/8 inch) size.
4. Install new plywood decking and toeboard. Plywood decking shall conform to or exceed the requirements of U.S. Product Standard PS-1-9S for APA Structural I AB Marine Grade. Plywood shall be pressure treated. Plywood decking shall be painted on all sides. Wooden toeboards shall be pressure treated S4S Douglas Fir. Toeboards shall be painted on all sides.
5. Plywood decking shall be attached using blind rivets. Blind rivets shall be stainless steel, 4.8 mm diameter and shall be installed at 305 mm maximum on center.
6. Areas with damaged paint or with no paint shall be cleaned and painted. Any damage to the galvanized surfaces shall be repaired with zinc rich primer. Galvanized surfaces shall be finish painted.

NOTES:

1. Total units: 2 travelers.
2. Contractor shall field verify all dimensions.

100 % PS&E

CONTRACT CHANGE ORDER NO. 178
SHEET 6 OF 6

REQUESTS FOR INFORMATION NOT ADDRESSED IN THIS CCO REMAIN IN FORCE

ALL DIMENSIONS ARE IN MILLIMETERS UNLESS OTHERWISE SHOWN

MARK	DATE	DESCRIPTIONS	BY	CH'D	CCO#
		REVISIONS			
1	03/28/11	SKYWAY BIKEPATH TRAVELER COMPLETION WORK	TH	JD	178

W. Long, Y. Liu
DESIGN OVERSIGHT
SIGN OFF DATE 03/28/11

Rev. Date: 5-18-98

	BY	CHECKED
DESIGN	T. Ho	J. Duxbury
DETAILS	T. Ho	J. Duxbury
QUANTITIES	T. Ho	J. Duxbury

PREPARED FOR THE STATE OF CALIFORNIA DEPARTMENT OF TRANSPORTATION

R. Manzanarez
PROJECT ENGINEER

CU 04
EA 0120F1

BRIDGE NO. 34-0006L/R
KILOMETER POST 13.9/14.3, 0.0/2.7

ORIGINAL SCALE IN MILLIMETERS FOR REDUCED PLANS 0 10 20 30 40 50 60 70 80 90 100

DISREGARD PRINTS BEARING EARLIER REVISION DATES →

REVISION DATES (PRELIMINARY STAGE ONLY): 03/28/11

SHEET 747S5 OF

FILE => I:\bb\04-012001\sas\contract plans and cco\cco\cco#178\1-original 03-28-11\dgn\aktpd06-2.dgn

USERNAME => DWinrow

SAN FRANCISCO OAKLAND BAY BRIDGE
EAST SPAN SEISMIC SAFETY PROJECT

SKYWAY CLEANUP ITEMS
TRAVELER DECKING REPLACEMENT

Caltrans Metric

DIST.	COUNTY	ROUTE	KILOMETER POST TOTAL PROJECT	SHEET NO.	TOTAL SHEETS
04	SF, Ala	80	13.9/14.3, 0.0/2.7	1164S5	1204

REGISTERED ENGINEER - CIVIL
Tien Hung Ho
No. C 43990
Exp. 06/30/11
CIVIL
REGISTERED PROFESSIONAL ENGINEER STATE OF CALIFORNIA

03-28-11
PLANS APPROVAL DATE

The State of California or its officers or agents shall not be responsible for the accuracy or completeness of electronic copies of this plan sheet.

T.Y. LIN / MOFFATT & NICHOL
TWO HARRISON STREET
SAN FRANCISCO, CA 94105

Caltrans now has a web site! To get to the web site, go to: http://www.dot.ca.gov