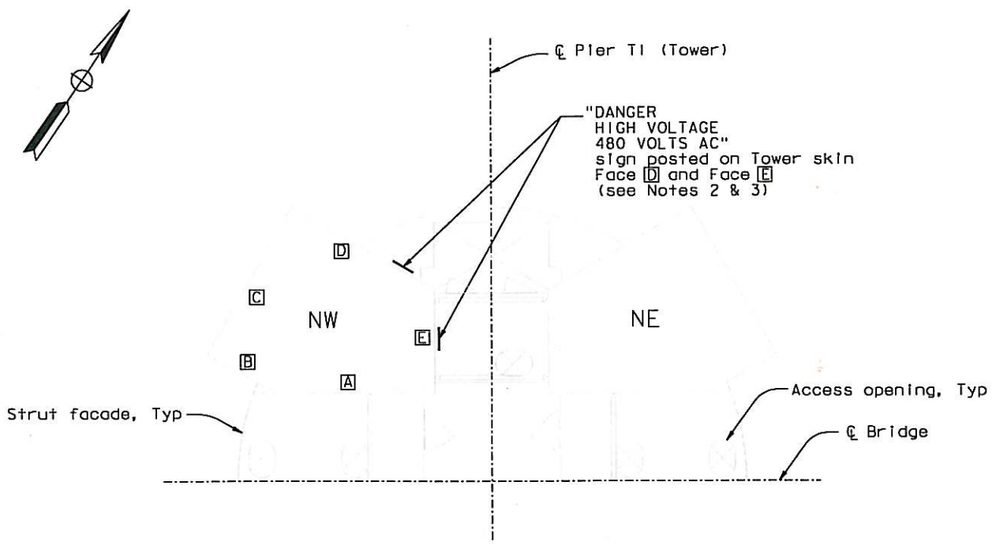

PARTIAL TOWER ACCESS PLAN

1:50

TABLE 1:

Durable signs shall be placed at eye level (1.5 m) above the top of landing/platforms located at the following elevations:

Elev (m)	Landing/Platform
13.000	Elevator maintenance landing
15.000	Tower elevator Stop No. 1
18.000	Tower strut
23.000	Tower strut
28.000	Tower strut
33.000	Tower strut
38.000	Tower strut
43.000	Tower strut
48.000	Tower strut
53.850	Tower elevator Stop No. 2
63.000	Tower strut
77.000	Tower strut
89.850	Tower elevator Stop No. 3
99.000	Tower strut
109.000	Tower strut
119.000	Tower strut
123.000	Tower strut
127.850	Tower elevator Stop No. 4
131.000	Tower strut
135.000	Tower strut
139.000	Tower strut
143.000	Tower strut
156.750	Tower elevator Stop No. 6
Durable signs shall be placed at the following elevations:	
160.600	Tower elevator enclosure parapet wall
161.500	Tower elevator enclosure screen

NOTES:

1. Signs shall be sized 356 wide by 254 high minimum, with lettering not less than one-inch high on a contrasting background.
2. For list of landings/platforms at which signs shall be placed, see Table 1. Additional signs shall be placed as directed by the Engineer.
3. All signs shall be drilled and tapped into the outside faces of the tower skins or parapet walls, except for tower elevator enclosure at Elev 161.500 m where the signs shall be attached to the inside faces the wire mesh.

ELEVATOR DETAIL NO. 3

SCALE: 1:250

ALL DIMENSION ARE IN MILLIMETERS UNLESS OTHERWISE SHOWN

M-35

CONTRACT CHANGE ORDER NO. 17451
SHEET 3 OF 9

REQUESTS FOR INFORMATION NOT ADDRESSED IN THIS CCO REMAIN IN FORCE

MARK	DATE	DESCRIPTIONS	BY	CH'D	CCO#
0	02/08/13	ADDITIONAL MISCELLANEOUS ELEVATOR DETAILS	JB	AE	17451

REVISIONS

DIST	COUNTY	ROUTE	KILOMETER POST TOTAL PROJECT	SHEET No	TOTAL SHEETS
04	SF	80	13.2/13.9	70S1	1204

REGISTERED MECHANICAL ENGINEER

02-08-13
PLANS APPROVAL DATE

REGISTERED PROFESSIONAL ENGINEER A.L. ELY No. 18880 Exp. 6-30-13 MECHANICAL STATE OF CALIFORNIA

T.Y. LIN / MOFFATT & NICHOL
825 BATTERY STREET
SAN FRANCISCO, CA 94111

The State of California or its officers or agents shall not be responsible for the accuracy or completeness of electronic copies of this plan sheet.

Caltrans now has a web site! To get to the web site, go to: http://www.dot.ca.gov

CALCULATED/DESIGNED BY	ES	DATE 5/3/02	REVISED BY	JNB	
CHECKED BY	RB	5/3/02	DATE REVISED	4/21/09	

DESIGN OVERSIGHT: Bob Zandipour

May 12, 2009

SAS STRUCTURE

STATE OF CALIFORNIA - DEPARTMENT OF TRANSPORTATION

Caltrans

FOR REDUCED PLANS ORIGINAL SCALE IS IN MILLIMETERS 0 20 40 60 80

FILE => L:\BB\04-012001\SAS\Contract Plans and CCO\CCO\CCO#17451\3-Update 02-08-13\DGN\40120fub035.dgn
USERNAME => DWinrow

CU 04251 EA 0120F1

LAST REVISION 00-00-00 DATE PLOTTED => 08 FEB 2013 TIME PLOTTED => 15:50:08

DIST.	COUNTY	ROUTE	KILOMETER POST TOTAL PROJECT	SHEET NO.	TOTAL SHEETS
04	SF	80	13.2/13.9	940S2R2	1204

REGISTERED ENGINEER - CIVIL

08-19-11

PLANS APPROVAL DATE

REGISTERED PROFESSIONAL ENGINEER Tien Hung Ho No. C 43990 Exp. 06/30/13 CIVIL STATE OF CALIFORNIA

The State of California or its officers or agents shall not be responsible for the accuracy or completeness of electronic copies of this plan sheet.

T.Y. LIN / MOFFATT & NICHOL
825 BATTERY STREET
SAN FRANCISCO, CA 94111

Caltrans now has a web site! To get to the web site, go to: http://www.dot.ca.gov

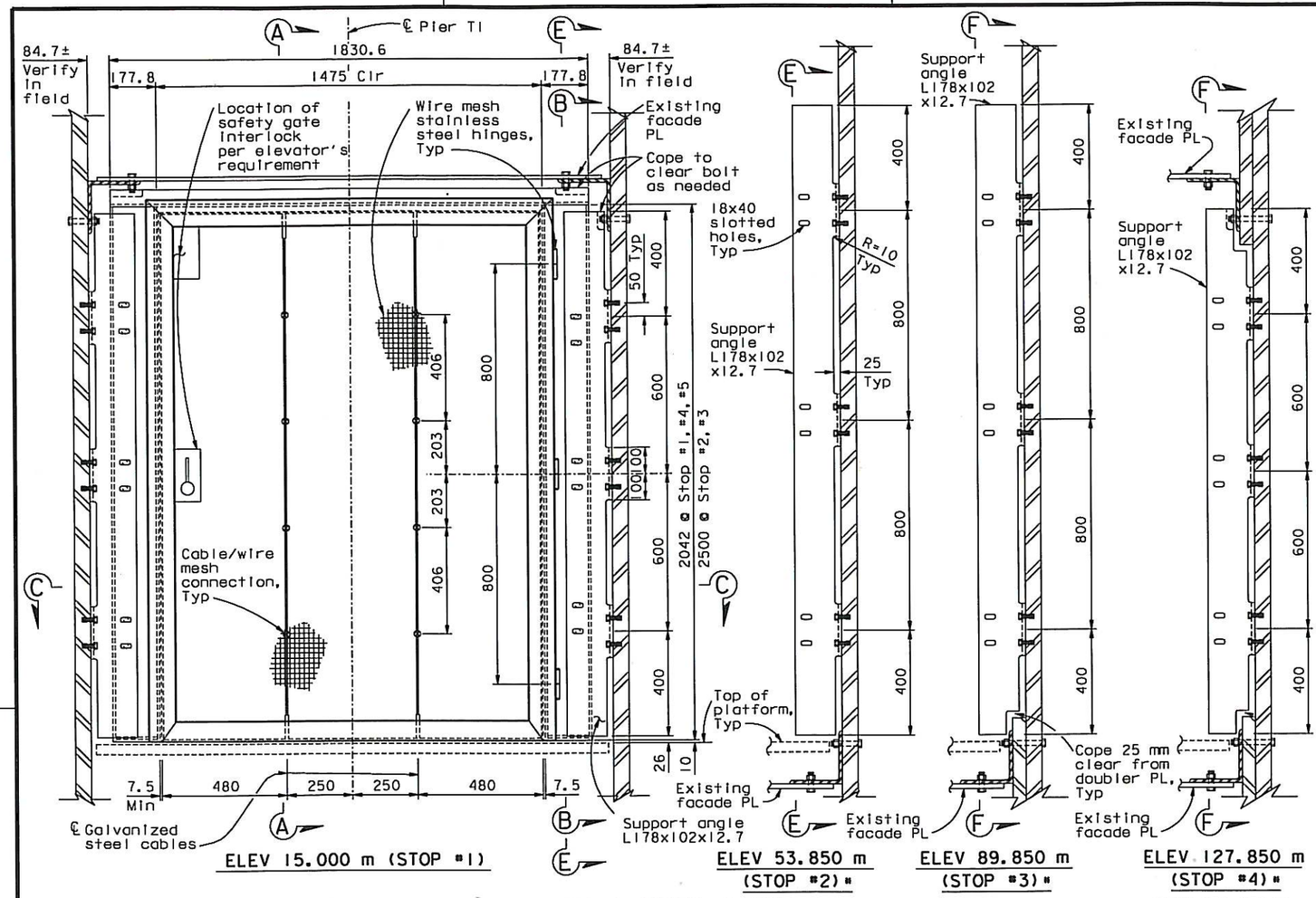

ELEVATOR SAFETY GATE

1:10 (*See Stop #1 for details not shown)
(Looking north towards elevator)

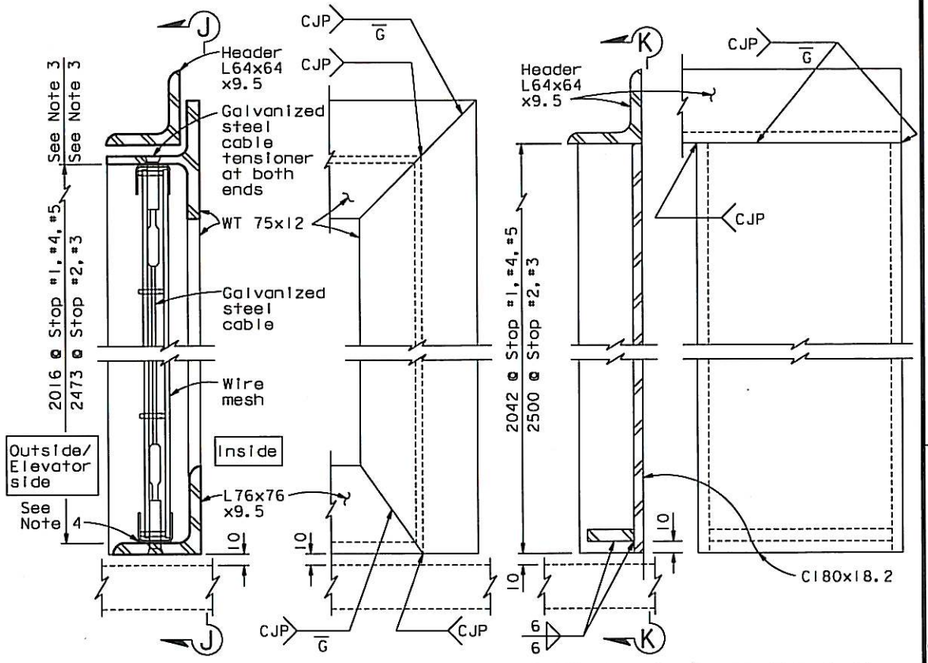

SECTION A-A
1:2.5

VIEW J-J
1:2.5
(Header not shown for clarity)

SECTION B-B
1:2.5

VIEW K-K
1:2.5
(Support angle not shown for clarity)

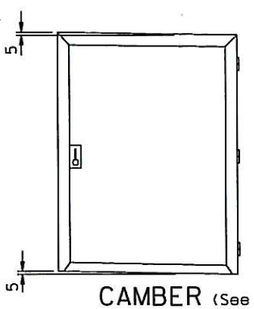

CAMBER (See Note 1)
NTS

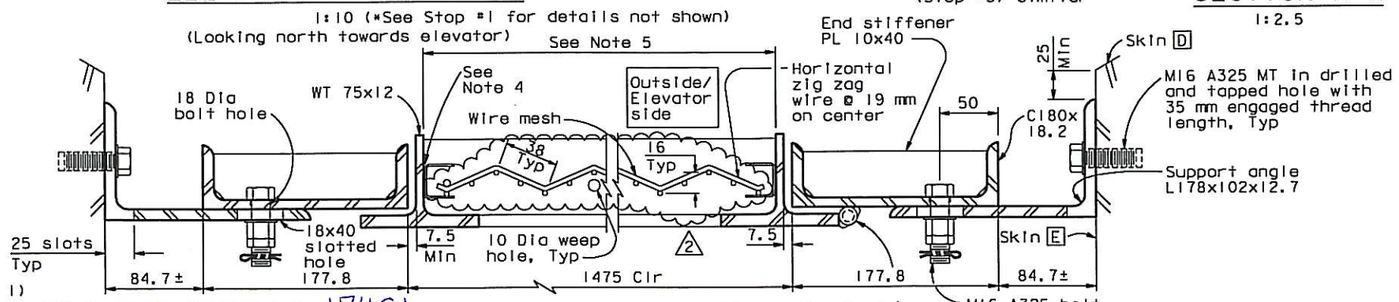

SECTION C-C
1:2.5

NOTES:

1. Provide 5 mm camber to account for self weight deflection of safety gate.
2. For Section E-E & F-F, see "Tower Elevator Enclosure Detail No.4" sheet.
3. Vertical height of steel frames shall be adjusted to receive the horizontal zigzag wires with U-band frame at top and bottom.
4. Welding of wire mesh U-band frame to steel frame shall be in accordance with wire mesh manufacturer' recommendations.
5. Width of steel frames shall be adjusted to receive the wire mesh with U-band frame.

CONTRACT CHANGE ORDER NO. 174S1
SHEET 4 OF 9

REQUESTS FOR INFORMATION NOT ADDRESSED IN THIS CCO REMAIN IN FORCE

MARK	DATE	DESCRIPTIONS	BY	CH'D	CCO#
2	01/15/13	ADDITIONAL MISCELLANEOUS ELEVATOR DETAILS	GM	TH	174S1
1	11/03/11	ELEVATOR DETAILS	GM	TH	85
0	08/19/11	ELEVATOR DETAILS	GM	TH	85

REVISIONS

R. Valizadeh/V. Toan/Y.L./W.L./F.C.
DESIGN OVERSIGHT
SIGN OFF DATE 01/15/13

	BY	CHECKED
DESIGN	G. Mok	T. Ho
DETAILS	G. Mok	T. Ho
QUANTITIES	G. Mok	T. Ho

PREPARED FOR THE STATE OF CALIFORNIA DEPARTMENT OF TRANSPORTATION

R. Manzanarez
PROJECT ENGINEER

ALL DIMENSIONS ARE IN MILLIMETERS UNLESS OTHERWISE SHOWN

BRIDGE NO. 34-0006L/R
KILOMETER POST 13.2/13.9

SAN FRANCISCO OAKLAND BAY BRIDGE
EAST SPAN SEISMIC SAFETY PROJECT
SELF-ANCHORED SUSPENSION BRIDGE
(SUPERSTRUCTURE & TOWER)

TOWER ELEVATOR ENCLOSURE DETAILS NO.2

CU 04
EA 0120F1

DISREGARD PRINTS BEARING EARLIER REVISION DATES 08/19/11

SHEET 523S2R2 OF

Rev. Date: 5-18-98

ORIGINAL SCALE IN MILLIMETERS FOR REDUCED PLANS 0 10 20 30 40 50 60 70 80 90 100

FILE => I:\bb\04-012001\sas\contract plans and cco\cco\cco#174s1\1-original 01-15-13\dgn\akele04.dgn

USERNAME => DWitrow DATE PLOTTED => 15 JAN 2013 TIME PLOTTED => 10:12:15

100% PS&E

DIST.	COUNTY	ROUTE	KILOMETER POST TOTAL PROJECT	SHEET NO.	TOTAL SHEETS
04	SF	80	13.2/13.9	940S3R2	1204

REGISTERED ENGINEER - CIVIL

08-19-11

PLANS APPROVAL DATE

REGISTERED PROFESSIONAL ENGINEER Tien Hung Ho No. C 43990 Exp. 06/30/13 CIVIL STATE OF CALIFORNIA

The State of California or its officers or agents shall not be responsible for the accuracy or completeness of electronic copies of this plan sheet.

T.Y. LIN / MOFFATT & NICHOL
825 BATTERY STREET
SAN FRANCISCO, CA 94111

Caltrans now has a web site! To get to the web site, go to: http://www.dot.ca.gov

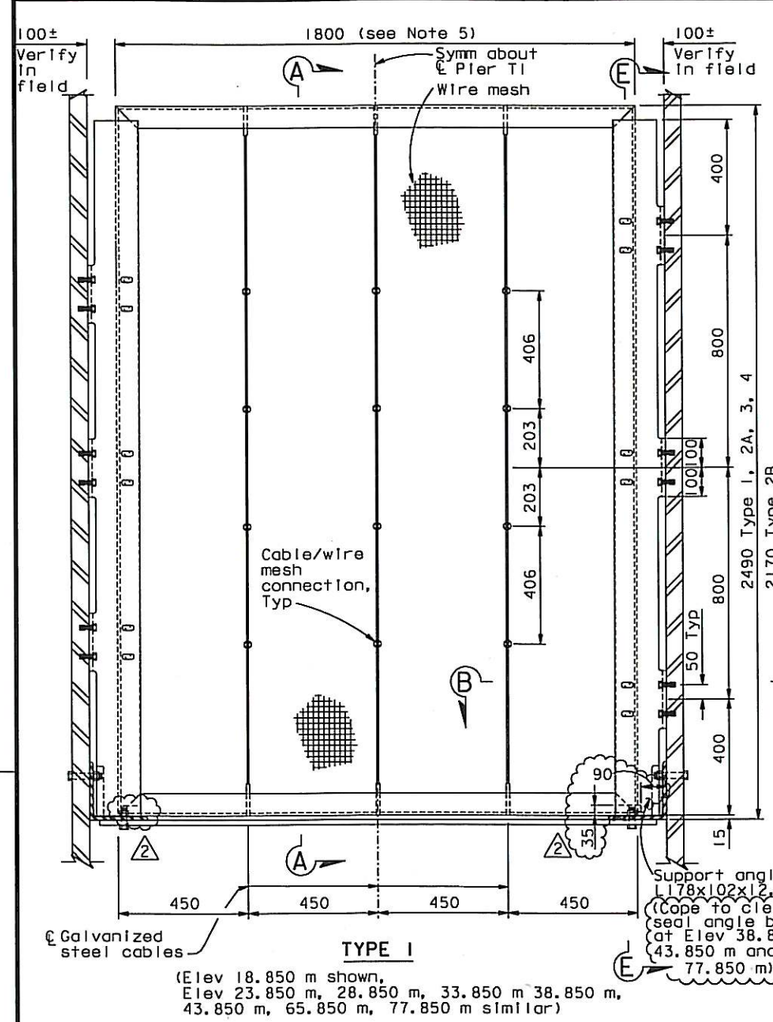

TYPE 1

(Elev 18.850 m shown, Elev 23.850 m, 28.850 m, 33.850 m 38.850 m, 43.850 m, 65.850 m, 77.850 m similar)

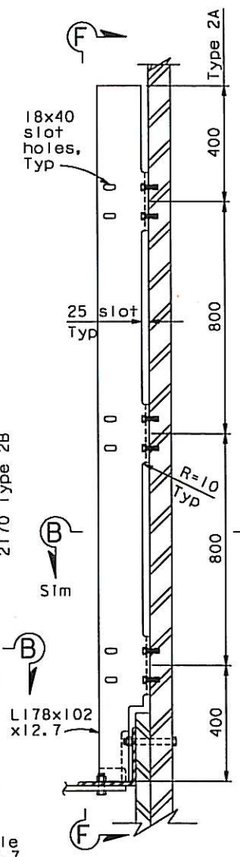

TYPE 2A*

(Elev 99.850 m shown, Elev 109.850 m similar)

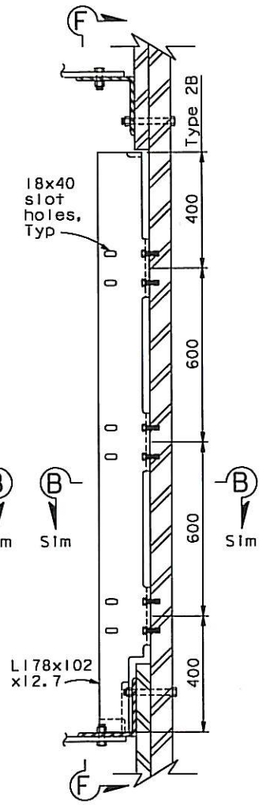

TYPE 2B*

(Elev 119.850 m shown, Elev 123.850 m, 131.850 m, 135.850 m similar)

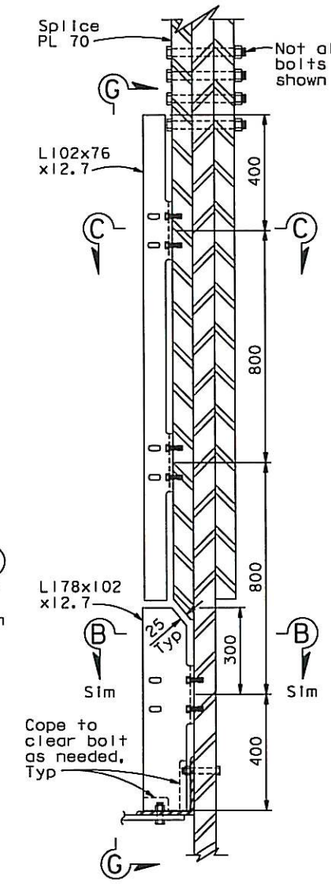

TYPE 3*

(Elev 48.450 m shown)

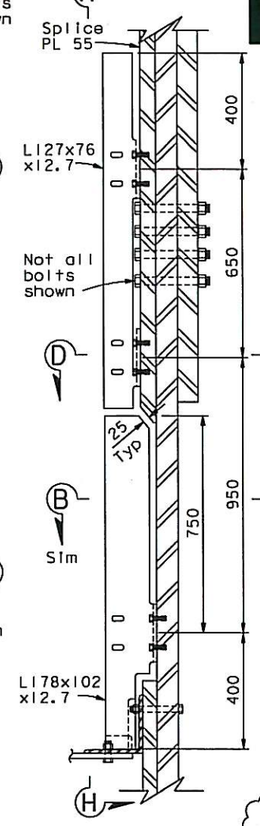

TYPE 4*

(Elev 143.850 m shown)

(*See Type 1 for details not shown)

SAFETY ENCLOSURE DETAILS

1:10

(Looking north towards elevator)

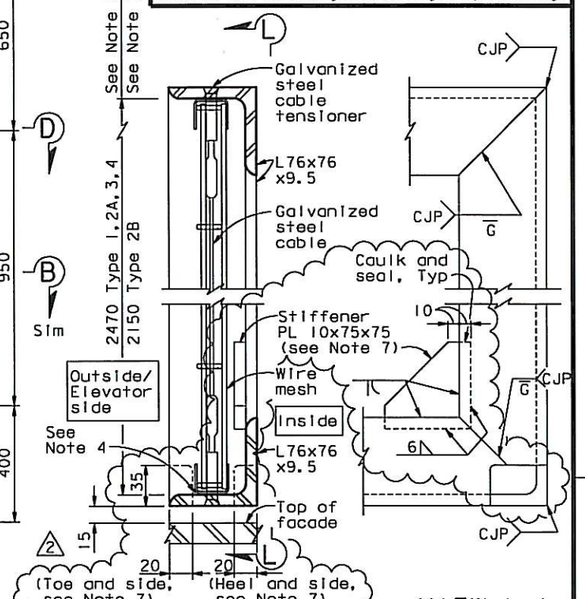

SECTION A-A

1:2.5

VIEW L-L

1:2.5

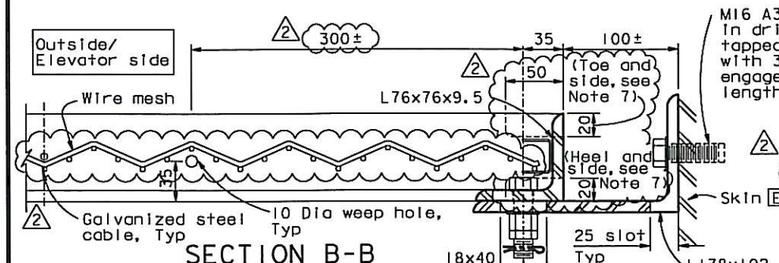

SECTION B-B

1:2.5

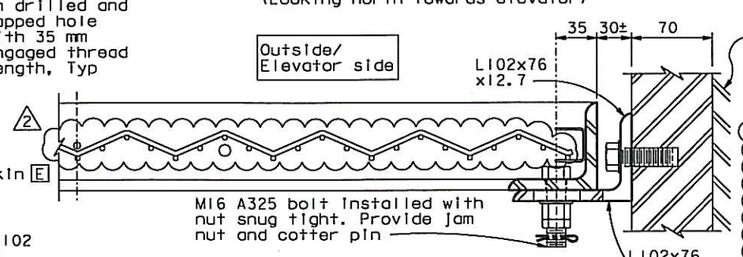

SECTION C-C

1:2.5

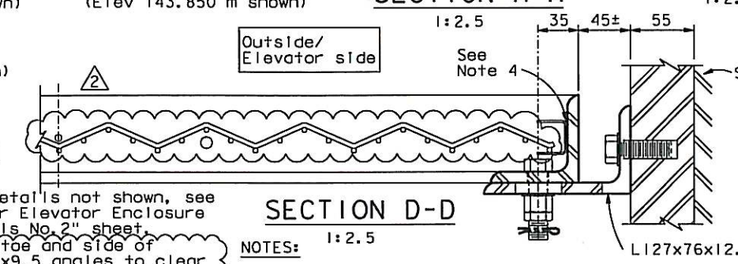

SECTION D-D

1:2.5

6. For details not shown, see "Tower Elevator Enclosure Details No. 2" sheet.
7. Cope toe and side of 76x76x9.5 angles to clear seal angle bolts at Elev 33.850 m, 38.850 m, 43.850 m, 65.850 m and 77.850 m. Cope heel and side of 76x76x9.5 angles to clear seal angle bolts at Elev 38.850 m, 43.850 m and 77.850 m. Stiffener PL shall be added at coped locations. Field verify all dimensions prior to fabrication.

ALL DIMENSIONS ARE IN MILLIMETERS UNLESS OTHERWISE SHOWN

NOTES:

1. For Sections E-E, F-F, G-G, H-H, see "Tower Elevator Enclosure Details No. 4" sheet.
2. Attachment of wire mesh to steel frames shall be per wire mesh manufacturer's requirements.
3. Vertical clear height of steel frames shall be adjusted to receive the wire mesh U-band frame.
4. Welding of wire mesh U-band frame to steel frame shall be in accordance with wire mesh manufacturer's recommendations.
5. Width of steel frames shall be adjusted to receive the wire mesh with U-band frame.

CONTRACT CHANGE ORDER NO. 174 S1
SHEET 5 OF 9

REQUESTS FOR INFORMATION NOT ADDRESSED IN THIS CCO REMAIN IN FORCE

MARK	DATE	DESCRIPTIONS	BY	CH'D	CCO#
2	01/15/13	ADDITIONAL MISCELLANEOUS ELEVATOR DETAILS	GM	TH	174S1
1	11/03/11	ELEVATOR DETAILS	GM	TH	85
0	08/19/11	ELEVATOR DETAILS	GM	TH	85

REVISIONS

R. Valizadeh/V. Toan/Y.L./W.L./F.C.
DESIGN OVERSIGHT
SIGN OFF DATE 01/15/13

	BY	CHECKED
DESIGN	G. Mok	T. Ho
DETAILS	G. Mok	T. Ho
QUANTITIES	G. Mok	T. Ho

PREPARED FOR THE STATE OF CALIFORNIA DEPARTMENT OF TRANSPORTATION

R. Manzanarez
PROJECT ENGINEER

BRIDGE NO. 34-0006L/R
KILOMETER POST 13.2/13.9

SAN FRANCISCO OAKLAND BAY BRIDGE
EAST SPAN SEISMIC SAFETY PROJECT
SELF-ANCHORED SUSPENSION BRIDGE
(SUPERSTRUCTURE & TOWER)

TOWER ELEVATOR ENCLOSURE DETAILS NO. 3

Rev. Date: 5-18-98

ORIGINAL SCALE IN MILLIMETERS FOR REDUCED PLANS 0 10 20 30 40 50 60 70 80 90 100

CU 04
EA 0120F1

DISREGARD PRINTS BEARING EARLIER REVISION DATES 08/19/11

SHEET 523S3R2 OF

FILE => I:\bb\04-012001\sas\contract plans and cco\cco\cco#174s1\1-original 01-15-13\dgn\akele05.dgn

USERNAME => DWinrow DATE PLOTTED => 15 JAN 2013 TIME PLOTTED => 10:13:41

100 % PS&E

ELEVATION (m)	"a" (mm)	ELEVATION (m)	"a" (mm)
18.850	415	99.850	425
23.850	430	109.850	425
28.850	420	119.850	435
33.850	390	123.850	425
38.850	300	131.850	425
43.850	200	135.850	425
65.850	410		
77.850	200		

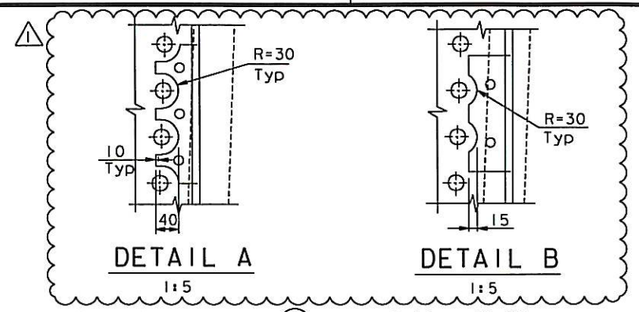

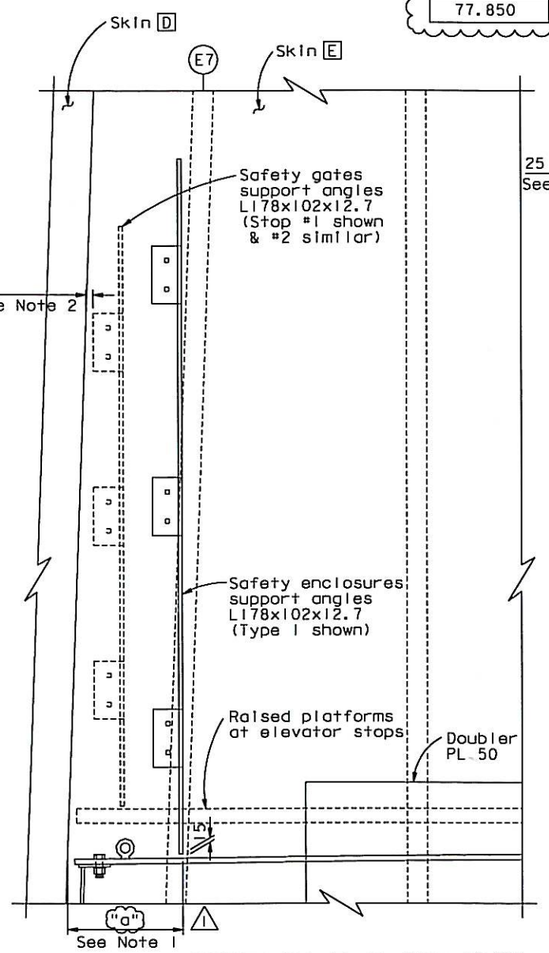

SECTION E-E (Elev 15.000 m thru Elev 77.850 m)
1:10
(North shaft shown, West shaft similar & opposite handed)

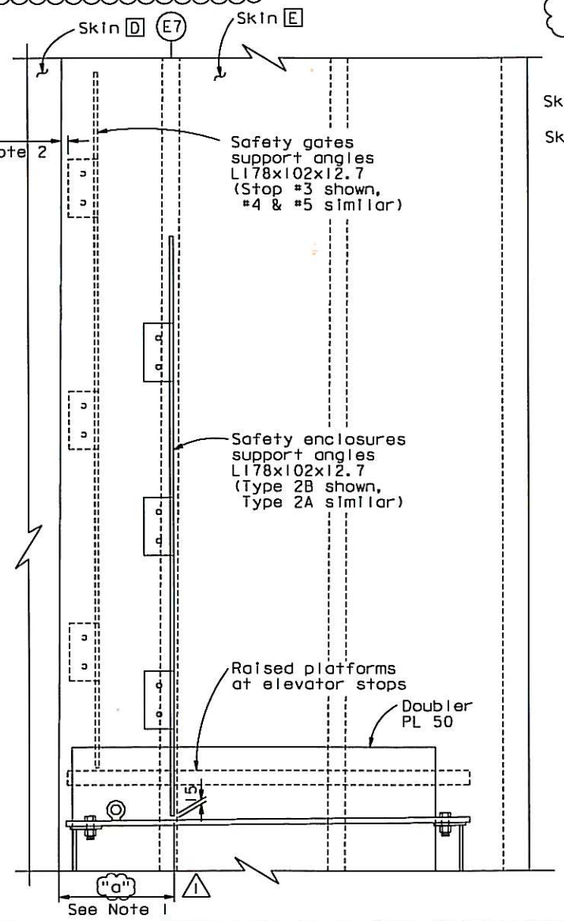

SECTION F-F (Elev 89.850 m thru Elev 139.850 m)
1:10
(North shaft shown, West shaft similar & opposite handed)

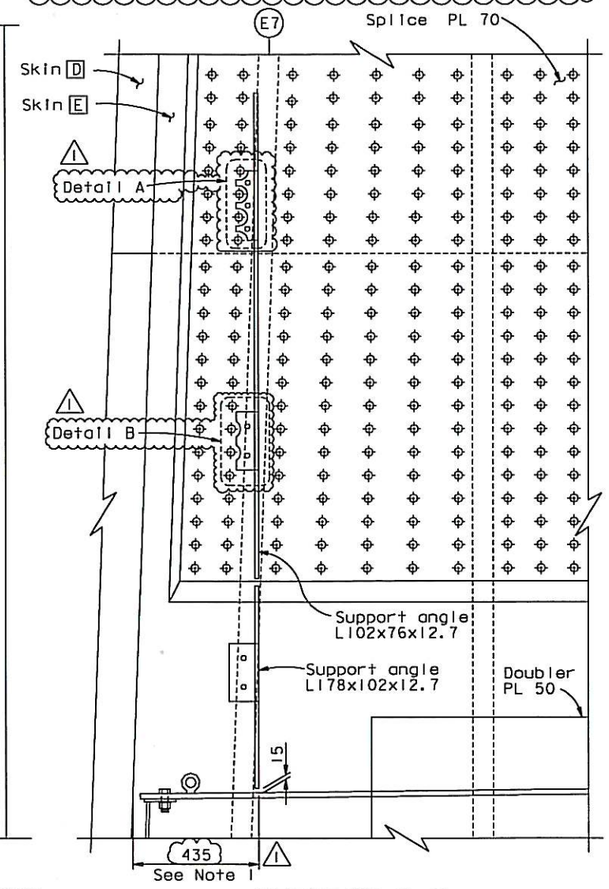

SECTION G-G (Elev 48.450 m)
1:10
(North shaft shown, West shaft similar & opposite handed)

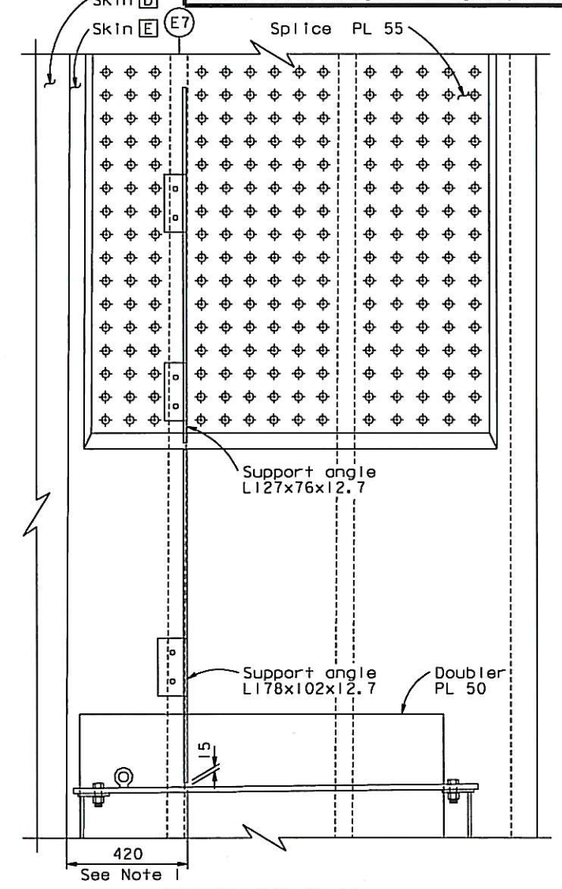

SECTION H-H (Elev 143.850 m)
1:10
(North shaft shown, West shaft similar & opposite handed)

NOTES:

1. Dimension may be adjusted to clear splice bolts, pad eyes and other interferences.
2. Dimension may be increased so that safety gate interlock will not interfere with the elevator.

CONTRACT CHANGE ORDER NO. 174S1
SHEET 6 OF 9

REQUESTS FOR INFORMATION NOT ADDRESSED IN THIS CCO REMAIN IN FORCE

ALL DIMENSIONS ARE IN MILLIMETERS UNLESS OTHERWISE SHOWN

MARK	DATE	DESCRIPTIONS	BY	CH'D	CCO#
1	01/15/13	ADDITIONAL MISCELLANEOUS ELEVATOR DETAILS	GM	TH	174S1
0	08/19/11	ELEVATOR DETAILS	GM	TH	85

REVISIONS

R. Valizadeh/V. Toan/Y. L./W. L./F. C.
DESIGN OVERSIGHT
Roya Valizadeh / Vang A. Toan / Y. Liu
SIGN OFF DATE 01/15/13

Rev. Date: 5-18-98

	BY	CHECKED
DESIGN	G. Mok	T. Ho
DETAILS	G. Mok	T. Ho
QUANTITIES	G. Mok	T. Ho

PREPARED FOR THE STATE OF CALIFORNIA DEPARTMENT OF TRANSPORTATION

R. Manzanarez
PROJECT ENGINEER

BRIDGE NO. 34-0006L/R
KILOMETER POST 13.2/13.9

ORIGINAL SCALE IN MILLIMETERS FOR REDUCED PLANS 0 10 20 30 40 50 60 70 80 90 100

CU 04
EA 0120F1

DISREGARD PRINTS BEARING EARLIER REVISION DATES → 08/19/11

REVISION DATES (PRELIMINARY STAGE ONLY)

SHEET 523S4R1 OF

FILE => I:\bb\04-012001\sas\contract plans and cco\cco\cco#174s1\1-original 01-15-13\dgn\akele06.dgn

Caltrans Metric

DIST.	COUNTY	ROUTE	KILOMETER POST TOTAL PROJECT	SHEET NO.	TOTAL SHEETS
04	SF	80	13.2/13.9	940S4R1	1204

REGISTERED ENGINEER - CIVIL
08-19-11
PLANS APPROVAL DATE

REGISTERED PROFESSIONAL ENGINEER Tien Hung Ho No. C 43990 Exp. 06/30/13 CIVIL STATE OF CALIFORNIA

The State of California or its officers or agents shall not be responsible for the accuracy or completeness of electronic copies of this plan sheet.

T.Y. LIN / MOFFATT & NICHOL
825 BATTERY STREET
SAN FRANCISCO, CA 94111

Caltrans now has a web site! To get to the web site, go to: http://www.dot.ca.gov

SAN FRANCISCO OAKLAND BAY BRIDGE
EAST SPAN SEISMIC SAFETY PROJECT
SELF-ANCHORED SUSPENSION BRIDGE
(SUPERSTRUCTURE & TOWER)

TOWER ELEVATOR ENCLOSURE DETAILS NO. 4

100 % PS&E

USERNAME => DWinrow DATE PLOTTED => 15 JAN 2013 TIME PLOTTED => 10:15:10

DIST.	COUNTY	ROUTE	KILOMETER POST TOTAL PROJECT	SHEET NO.	TOTAL SHEETS
04	SF	80	13.2/13.9	940S4ARI	1204

REGISTERED ENGINEER - CIVIL

09-16-11

PLANS APPROVAL DATE

REGISTERED PROFESSIONAL ENGINEER Tien Hung Ho No. C 43990 Exp. 06/30/13 CIVIL STATE OF CALIFORNIA

The State of California or its officers or agents shall not be responsible for the accuracy or completeness of electronic copies of this plan sheet.

T.Y. LIN / MOFFATT & NICHOL
825 BATTERY STREET
SAN FRANCISCO, CA 94111

Caltrans now has a web site! To get to the web site, go to: http://www.dot.ca.gov

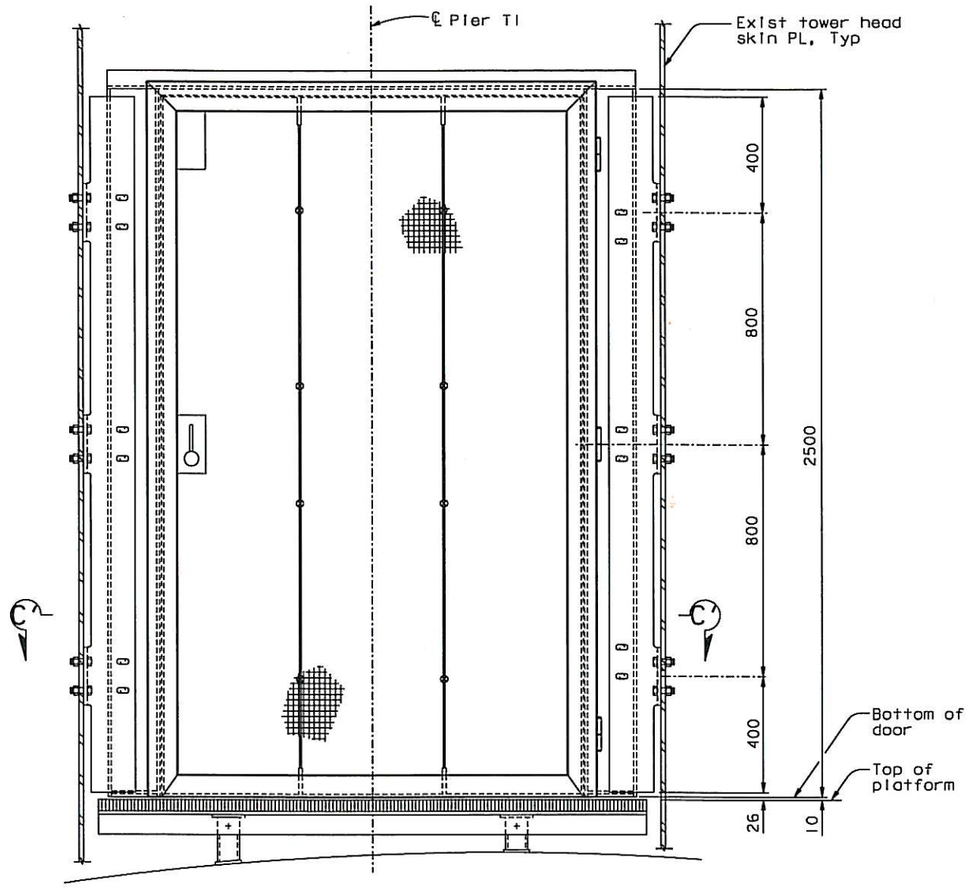

ELEV 156.750 m (STOP #6)

ELEVATOR SAFETY GATE (See Note 1)

1:10

(Looking North towards elevator)

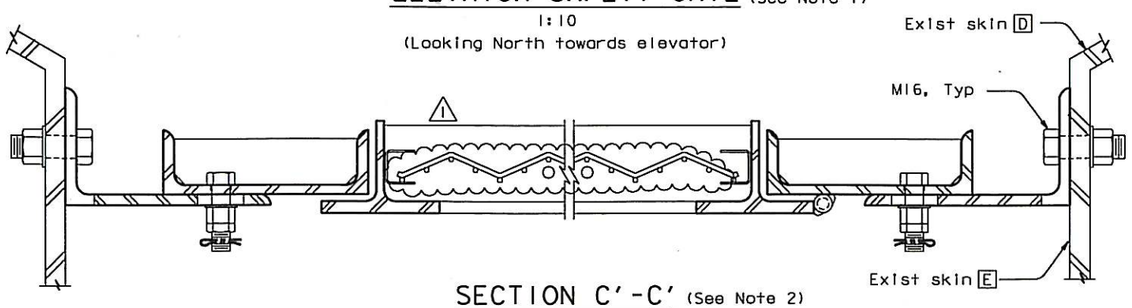

SECTION C'-C' (See Note 2)

1:2.5

NOTES:

1. Stop #6 is similar to Stop #3. For details not shown, see "Tower Elevator Enclosure Details No. 2" sheet.
2. For Details not shown, see Section C-C on "Tower Elevator Enclosure Details No. 2" sheet.

CONTRACT CHANGE ORDER NO. 174S1
SHEET 7 OF 9

REQUESTS FOR INFORMATION NOT ADDRESSED IN THIS CCO REMAIN IN FORCE

ALL DIMENSIONS ARE IN MILLIMETERS UNLESS OTHERWISE SHOWN

R. Vallzadeh/V. Toan/Y.L./W.L./F.C.
DESIGN OVERSIGHT
Ryan Vallzadeh / Vong Toan / Y. Liu
SIGN OFF DATE 01/15/13

MARK	DATE	DESCRIPTIONS	BY	CH'D	CCO#
1	01/15/13	ADDITIONAL MISCELLANEOUS ELEVATOR DETAILS	GM	TH	174S1
0	09/16/11	TOWER SUSPENDER CABLE & ELEVATOR	GM	TH	203S1

REVISIONS

DESIGN	BY G. Mak	CHECKED T. Ho	
DETAILS	BY G. Mak	CHECKED T. Ho	
QUANTITIES	BY G. Mak	CHECKED T. Ho	

PREPARED FOR THE STATE OF CALIFORNIA DEPARTMENT OF TRANSPORTATION

R. Manzanarez
PROJECT ENGINEER

BRIDGE NO. 34-0006L/R
KILOMETER POST 13.2/13.9

SAN FRANCISCO OAKLAND BAY BRIDGE
EAST SPAN SEISMIC SAFETY PROJECT
SELF-ANCHORED SUSPENSION BRIDGE
(SUPERSTRUCTURE & TOWER)

TOWER ELEVATOR ENCLOSURE DETAILS NO. 5

Rev. Date: 5-18-98

ORIGINAL SCALE IN MILLIMETERS FOR REDUCED PLANS 0 10 20 30 40 50 60 70 80 90 100

CU 04
EA 0120F1

DISREGARD PRINTS BEARING EARLIER REVISION DATES → 09/16/11

REVISION DATES (PRELIMINARY STAGE ONLY)

SHEET 623S4ARI OF

FILE => I:\bb\04-012001\sas\contract plans and cco\cco\cco#17461\1-original 01-15-13\dgn\akele07.dgn

100 % PS&E

USERNAME => DWinrow DATE PLOTTED => 15 JAN 2013 TIME PLOTTED => 10:16:31

DIST.	COUNTY	ROUTE	KILOMETER POST TOTAL PROJECT	SHEET NO.	TOTAL SHEETS
04	SF	80	13.2/13.9	94054BR2	1204

REGISTERED ENGINEER - CIVIL

11-04-11

PLANS APPROVAL DATE

REGISTERED PROFESSIONAL ENGINEER Marwan N. Nader No. C 054426 Exp. 12/31/13 CIVIL STATE OF CALIFORNIA

The State of California or its officers or agents shall not be responsible for the accuracy or completeness of electronic copies of this plan sheet.

T.Y. LIN / MOFFATT & NICHOL
825 BATTERY STREET
SAN FRANCISCO, CA 94111

Caltrans now has a web site! To get to the web site, go to: http://www.dot.ca.gov

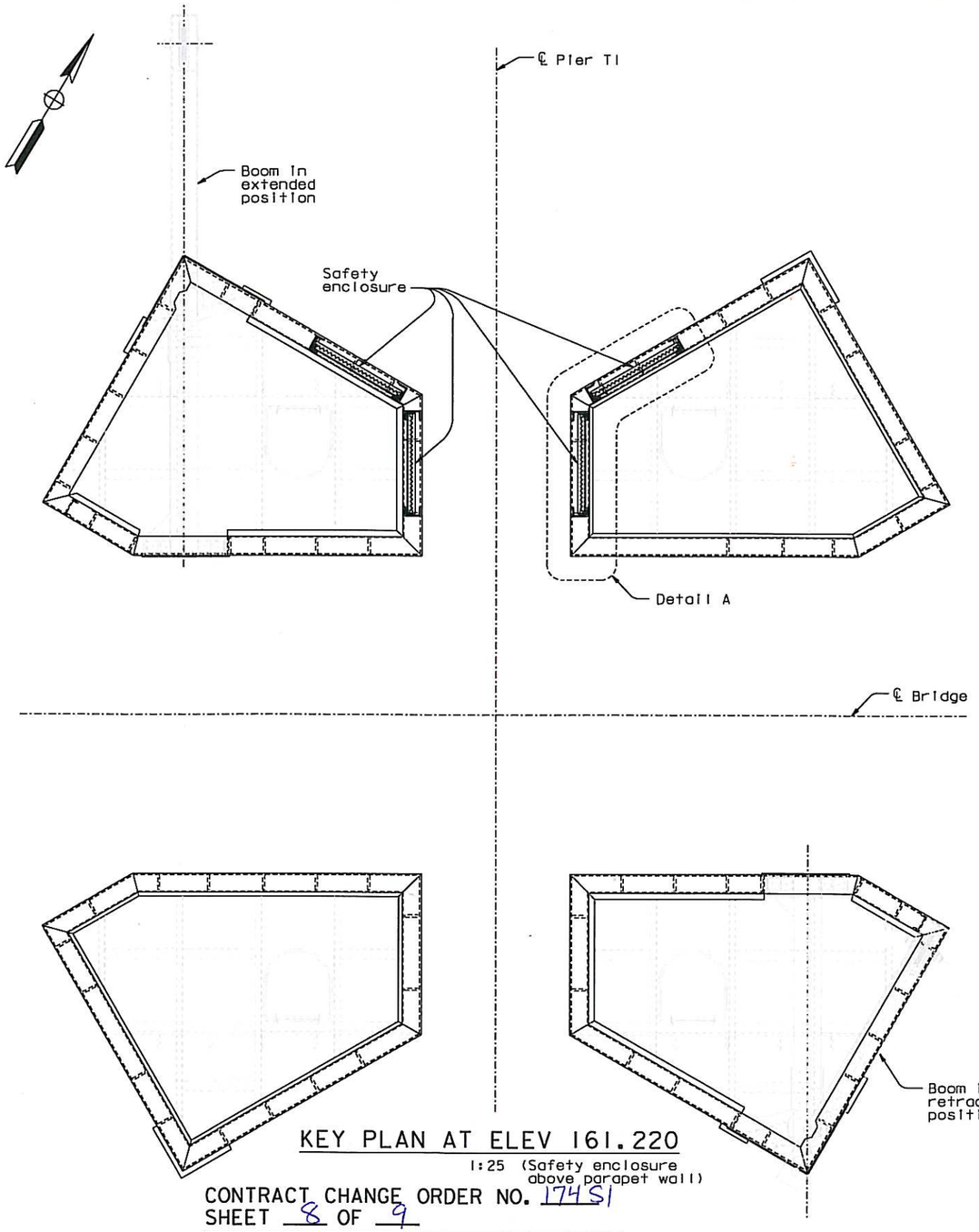

KEY PLAN AT ELEV 161.220

1:25 (Safety enclosure above parapet wall)

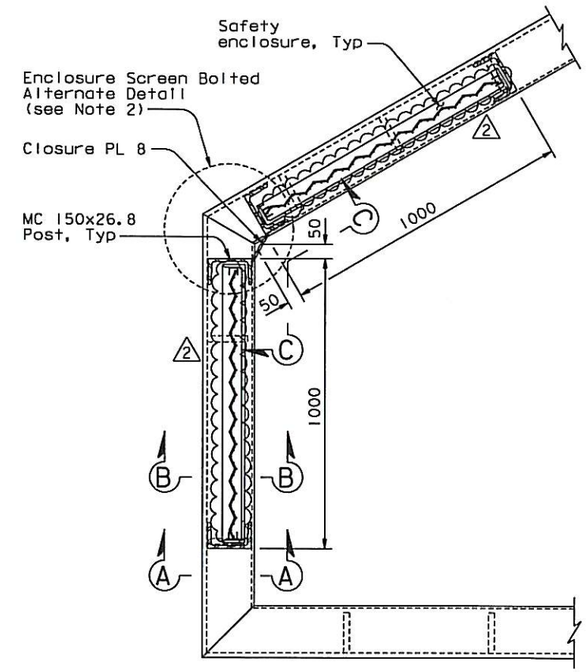

DETAIL A

1:10

NOTES:

1. For Sections A-A, B-B and View C-C, see "Tower Elevator Enclosure Details No.7" sheet.
2. For Enclosure Screen Bolted Alternate Detail, see "Tower Enclosure Details No.7" sheet.

CONTRACT CHANGE ORDER NO. 174S1
SHEET 8 OF 9

REQUESTS FOR INFORMATION NOT ADDRESSED IN THIS CCO REMAIN IN FORCE

MARK	DATE	DESCRIPTIONS	BY	CH'D	CCO#
2	01/15/13	ADDITIONAL MISCELLANEOUS ELEVATOR DETAILS	NV	MN	174S1
1	05/16/12	TOWER ELEVATOR SAFETY ENCLOSURE	NV	MN	203S2
0	11/04/11	TOWER ELEVATOR SAFETY ENCLOSURE	NV	MN	203S2

REVISIONS

R. Valizadeh/V. Toan/Y.L./W.L./F.C.
DESIGN OVERSIGHT
SIGN OFF DATE 01/15/13

Rev. Date: 5-18-98

DESIGN	BY N. Vo	CHECKED M. Nader	
DETAILS	BY N. Vo	CHECKED A. Baumberger	
QUANTITIES	BY N. Vo	CHECKED J. Duxbury	

PREPARED FOR THE STATE OF CALIFORNIA DEPARTMENT OF TRANSPORTATION

ALL DIMENSIONS ARE IN MILLIMETERS UNLESS OTHERWISE SHOWN

R. Manzanarez
PROJECT ENGINEER

BRIDGE NO. 34-0006L/R
KILOMETER POST 13.2/13.9

SAN FRANCISCO OAKLAND BAY BRIDGE
EAST SPAN SEISMIC SAFETY PROJECT
SELF-ANCHORED SUSPENSION BRIDGE
(SUPERSTRUCTURE & TOWER)

TOWER ELEVATOR ENCLOSURE DETAILS NO.6

ORIGINAL SCALE IN MILLIMETERS FOR REDUCED PLANS 0 10 20 30 40 50 60 70 80 90 100

CU 04
EA 0120F1

DISREGARD PRINTS BEARING EARLIER REVISION DATES 11/04/11

REVISION DATES (PRELIMINARY STAGE ONLY)

SHEET 623S4BR2 OF

FILE => I:\bb\04-012001\sas\contract plans and cco\cco\cco#174s1\1-original 01-15-13\dgn\akele12.dgn

100 % PS&E

USERNAME => DWinrow DATE PLOTTED => 15 JAN 2013 TIME PLOTTED => 10:18:49

DIST.	COUNTY	ROUTE	KILOMETER POST TOTAL PROJECT	SHEET NO.	TOTAL SHEETS
04	SF	80	13.2/13.9	340S4CR2	1204

REGISTERED ENGINEER - CIVIL

11-04-11
PLANS APPROVAL DATE

REGISTERED PROFESSIONAL ENGINEER Marwan N. Nader No. C 054426 Exp. 12/31/13 CIVIL STATE OF CALIFORNIA

The State of California or its officers or agents shall not be responsible for the accuracy or completeness of electronic copies of this plan sheet.

T.Y. LIN / MOFFATT & NICHOL
825 BATTERY STREET
SAN FRANCISCO, CA 94111

Caltrans now has a web site! To get to the web site, go to: http://www.dot.ca.gov

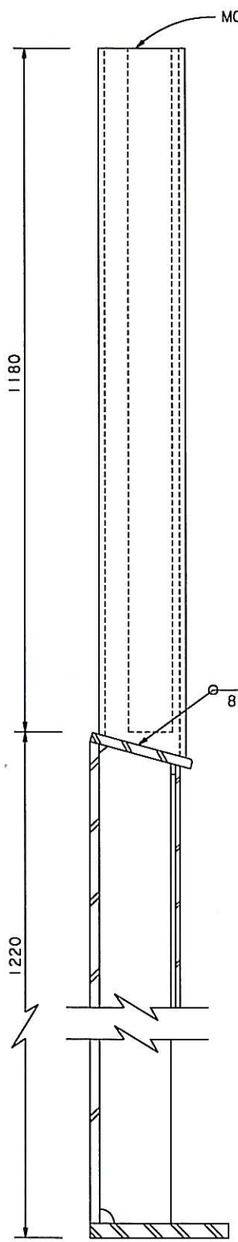

SECTION A-A
1:5

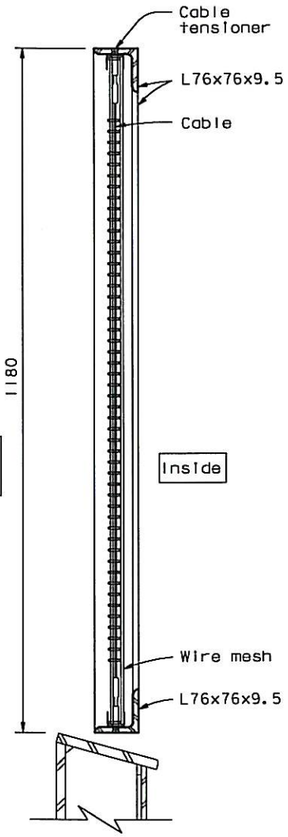

SECTION B-B (See Note 1)
1:5

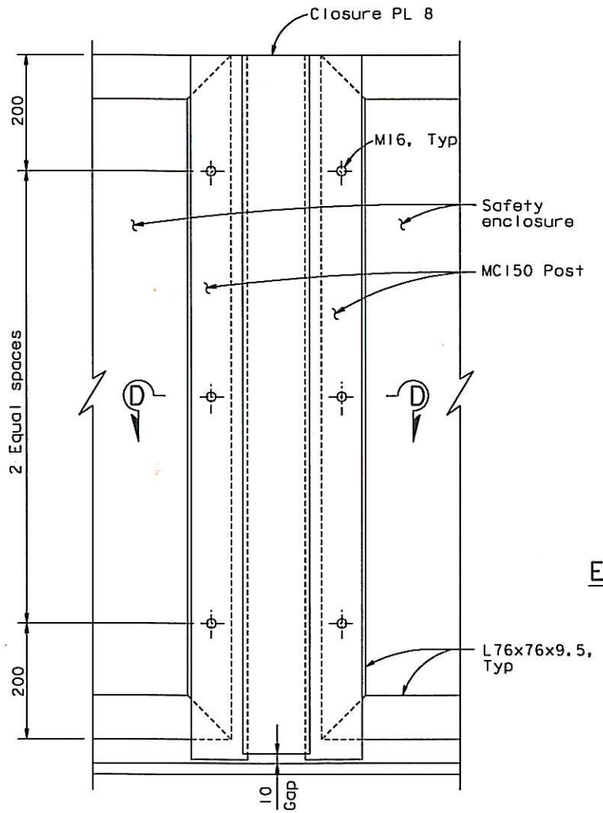

VIEW C-C (Developed)
1:5

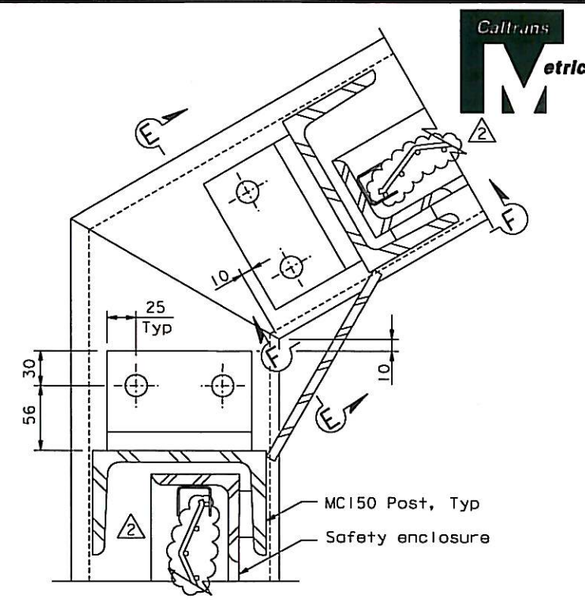

ENCLOSURE SCREEN BOLTED ALTERNATE DETAIL
1:2.5

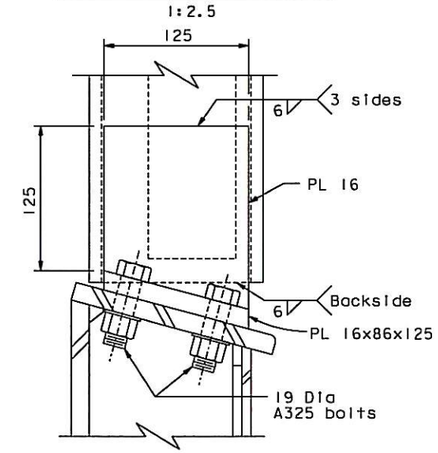

SECTION E-E
1:2.5

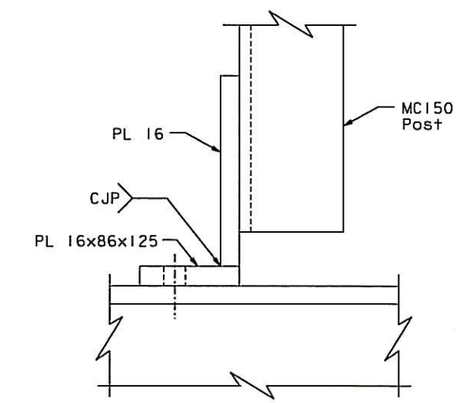

SECTION F-F
1:2.5

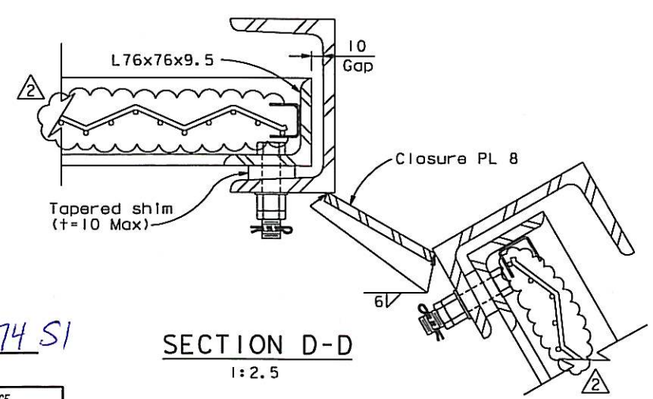

SECTION D-D
1:2.5

NOTES:

1. For enclosure details not shown, see "Tower Elevator Enclosure Details No. 2" sheet.
2. At the Contractor's option, Enclosure Screen Bolted Alternate Detail may be used in lieu of fillet weld.

CONTRACT CHANGE ORDER NO. 174 S1
SHEET 9 OF 9

REQUESTS FOR INFORMATION NOT ADDRESSED IN THIS CCO REMAIN IN FORCE

MARK	DATE	DESCRIPTIONS	BY	CH'D	CCO#
2	01/15/13	ADDITIONAL MISCELLANEOUS ELEVATOR DETAILS	NV	MN	174S1
1	05/16/12	TOWER ELEVATOR EXTENSION	NV	MN	203S2
0	11/04/11	TOWER ELEVATOR EXTENSION	NV	MN	203S2

REVISIONS

R. Valizadeh/V. Toan/Y.L./W.L./F.C.
DESIGN OVERSIGHT
SIGN OFF DATE 01/15/13

Rev. Date: 5-18-98

	BY	CHECKED	
DESIGN	N. Vo	M. Nader	
DETAILS	N. Vo	A. Baumberger	
QUANTITIES	N. Vo	J. Duxbury	

PREPARED FOR THE STATE OF CALIFORNIA DEPARTMENT OF TRANSPORTATION

ALL DIMENSIONS ARE IN MILLIMETERS UNLESS OTHERWISE SHOWN

R. Manzanarez
PROJECT ENGINEER

BRIDGE NO. 34-0006L/R
KILOMETER POST 13.2/13.9

SAN FRANCISCO OAKLAND BAY BRIDGE
EAST SPAN SEISMIC SAFETY PROJECT
SELF-ANCHORED SUSPENSION BRIDGE
(SUPERSTRUCTURE & TOWER)

TOWER ELEVATOR ENCLOSURE DETAILS NO. 7

ORIGINAL SCALE IN MILLIMETERS FOR REDUCED PLANS 0 10 20 30 40 50 60 70 80 90 100

CU 04
EA 0120F1

DISREGARD PRINTS BEARING EARLIER REVISION DATES 11/04/11

REVISION DATES (PRELIMINARY STAGE ONLY)

SHEET 623S4CR2 OF

FILE => I:\bb\04-0120F1\sas\contract plans and cco\cco\cco=174s1\1-original 01-15-13\dgn\akelel3.dgn

100 % PS&E

USERNAME => DWinrow DATE PLOTTED => 15 JAN 2013 TIME PLOTTED => 10:20:43