| DIST. | COUNTY | ROUTE | KILOMETER POST TOTAL PROJECT | SHEET NO. | TOTAL SHEETS |
|---|---|---|---|---|---|
| 04 | SF | 80 | 13.2/13.9 | 940S4CR2 | 1204 |

REGISTERED ENGINEER - CIVIL

11-04-11
PLANS APPROVAL DATE

*The State of California or its officers or agents shall not be responsible for the accuracy or completeness of electronic copies of this plan sheet.*

REGISTERED PROFESSIONAL ENGINEER Marwan N. Nader No. C 054426 Exp. 12/31/13 CIVIL STATE OF CALIFORNIA

T.Y. LIN / MOFFATT & NICHOL
825 BATTERY STREET
SAN FRANCISCO, CA 94111

*Caltrans now has a web site! To get to the web site, go to: http://www.dot.ca.gov*

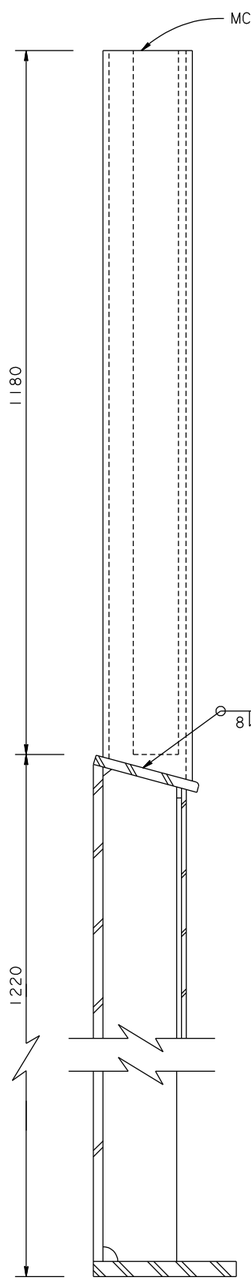


SECTION A-A
1:5

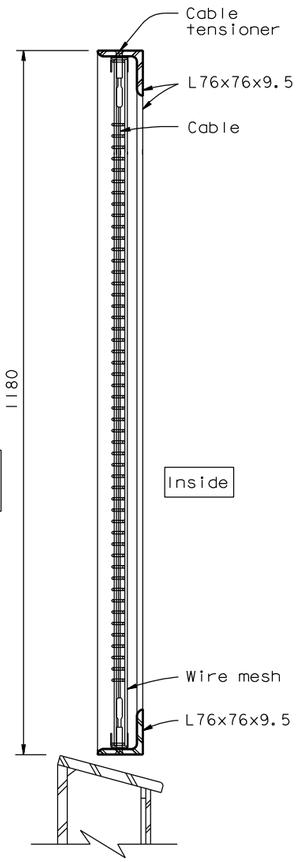


SECTION B-B (See Note 1)
1:5

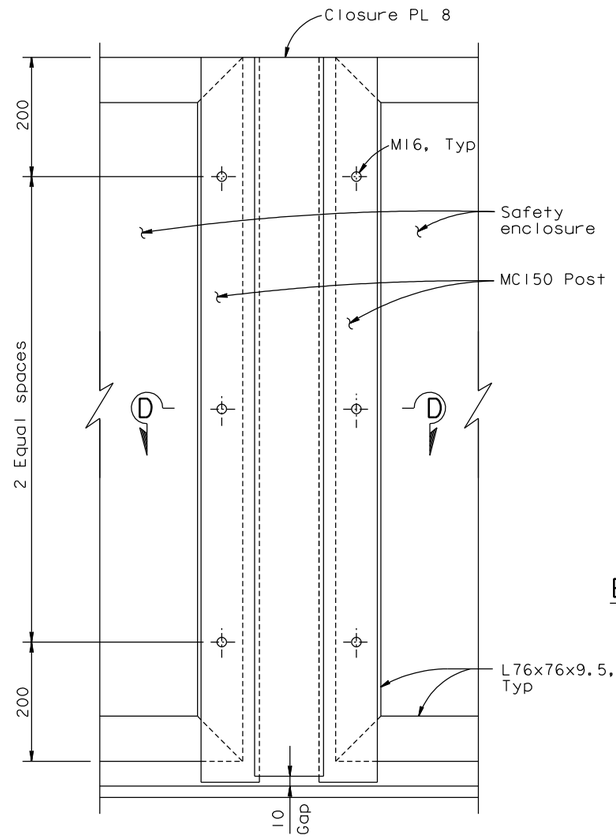


VIEW C-C (Developed)
1:5

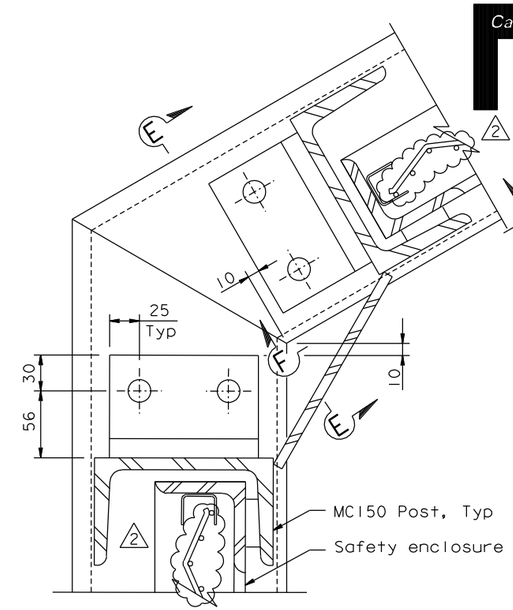


ENCLOSURE SCREEN BOLTED
ALTERNATE DETAIL
1:2.5

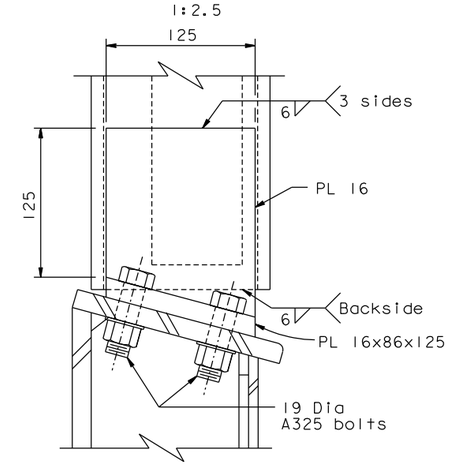


SECTION E-E
1:2.5

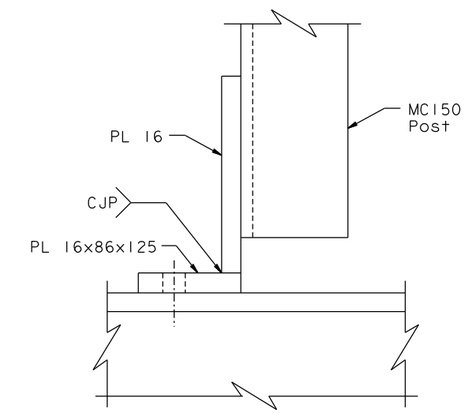


SECTION F-F
1:2.5

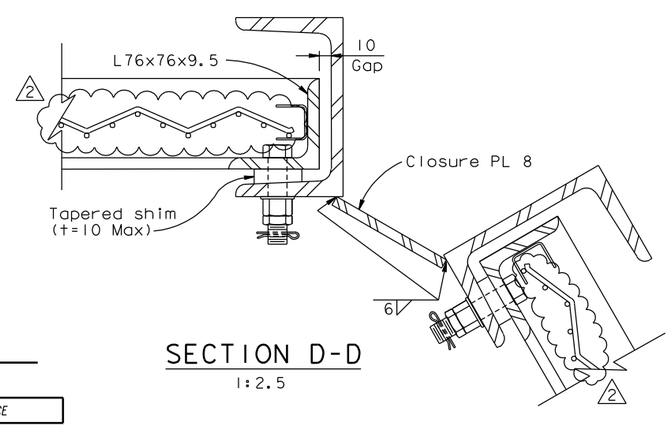


SECTION D-D
1:2.5

NOTES:

1. For enclosure details not shown, see "Tower Elevator Enclosure Details No.2" sheet.
2. At the Contractor's option, Enclosure Screen Bolted Alternate Detail may be used in lieu of fillet weld.

CONTRACT CHANGE ORDER NO. ____
SHEET ____ OF ____

*REQUESTS FOR INFORMATION NOT ADDRESSED IN THIS CCO REMAIN IN FORCE*

| MARK | DATE | DESCRIPTIONS | BY | CH'D | CCO# |
|---|---|---|---|---|---|
| 2 | 01/15/13 | ADDITIONAL MISCELLANEOUS ELEVATOR DETAILS | NV | MN | 174S1 |
| 1 | 05/16/12 | TOWER ELEVATOR EXTENSION | NV | MN | 203S2 |
| 0 | 11/04/11 | TOWER ELEVATOR EXTENSION | NV | MN | 203S2 |

REVISIONS

R. Valizadeh/V. Toan/Y.L./W.L./F.C.
DESIGN OVERSIGHT
SIGN OFF DATE 01/15/13

Rev. Date: 5-18-98

| | | | |
|---|---|---|---|
| DESIGN | BY N. Vo | CHECKED M. Nader | |
| DETAILS | BY N. Vo | CHECKED A. Baumberger | |
| QUANTITIES | BY N. Vo | CHECKED J. Duxbury | |

PREPARED FOR THE STATE OF CALIFORNIA DEPARTMENT OF TRANSPORTATION

ALL DIMENSIONS ARE IN MILLIMETERS UNLESS OTHERWISE SHOWN

R. Manzanarez
PROJECT ENGINEER

BRIDGE NO. 34-0006L/R
KILOMETER POST 13.2/13.9

SAN FRANCISCO OAKLAND BAY BRIDGE
EAST SPAN SEISMIC SAFETY PROJECT
SELF-ANCHORED SUSPENSION BRIDGE
(SUPERSTRUCTURE & TOWER)

# TOWER ELEVATOR ENCLOSURE DETAILS NO. 7

ORIGINAL SCALE IN MILLIMETERS FOR REDUCED PLANS 0 10 20 30 40 50 60 70 80 90 100

CU 04
EA 0120F1

DISREGARD PRINTS BEARING EARLIER REVISION DATES

REVISION DATES (PRELIMINARY STAGE ONLY) 11/04/11

SHEET 623S4CR2 OF

FILE => I:\bb\04-012001\sas\contract plans and cco\cco\cco*174s1\1-original 01-15-13\dgn\akele13.dgn

100% PS&E

USERNAME => DWinrow DATE PLOTTED => 15 JAN 2013 TIME PLOTTED => 10:20:43