DIST.	COUNTY	ROUTE	KILOMETER POST TOTAL PROJECT	SHEET NO.	TOTAL SHEETS
04	SF	80	13.2/13.9	940S4BR2	1204

Caltrans Metric

REGISTERED ENGINEER - CIVIL

11-04-11

PLANS APPROVAL DATE

REGISTERED PROFESSIONAL ENGINEER Marwan N. Nader No. C 054426 Exp. 12/31/13 CIVIL STATE OF CALIFORNIA

The State of California or its officers or agents shall not be responsible for the accuracy or completeness of electronic copies of this plan sheet.

T.Y. LIN / MOFFATT & NICHOL
825 BATTERY STREET
SAN FRANCISCO, CA 94111

Caltrans now has a web site! To get to the web site, go to: http://www.dot.ca.gov

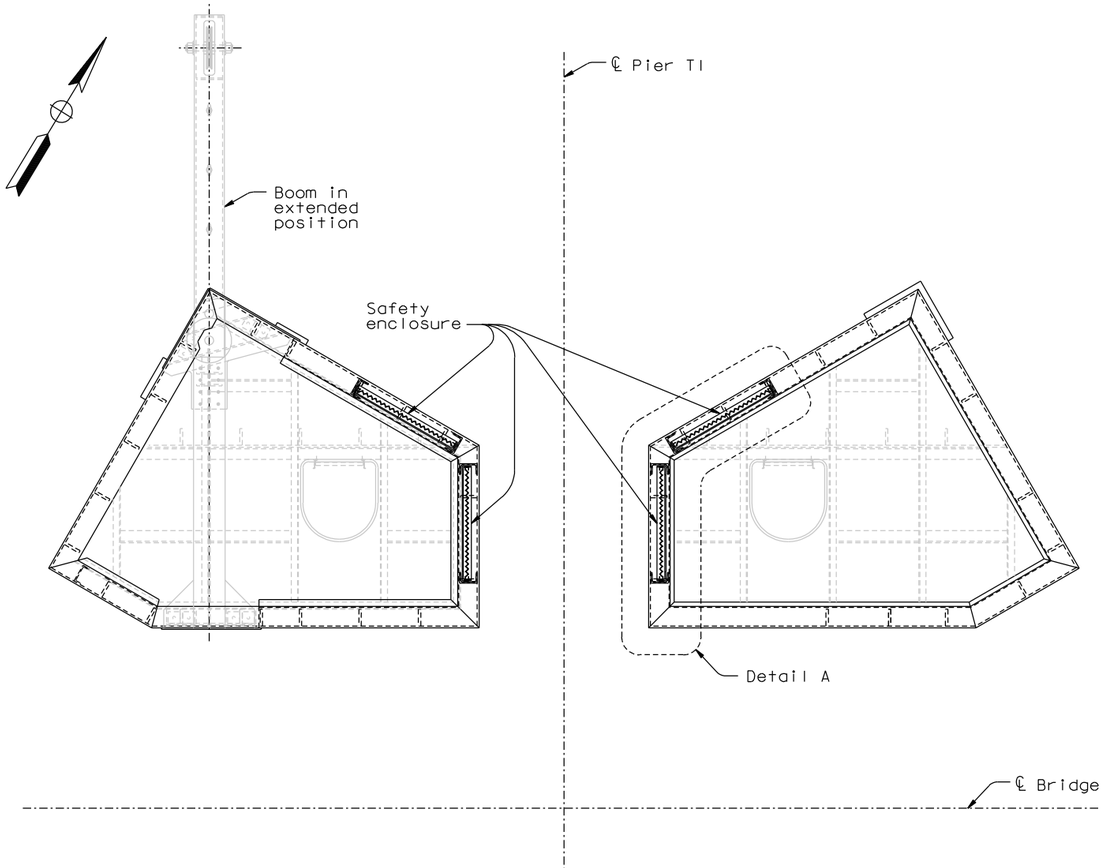

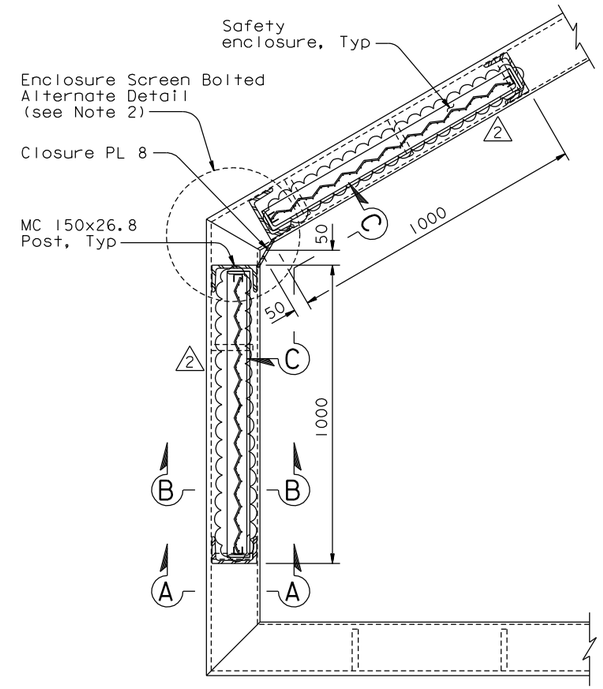

DETAIL A

1:10

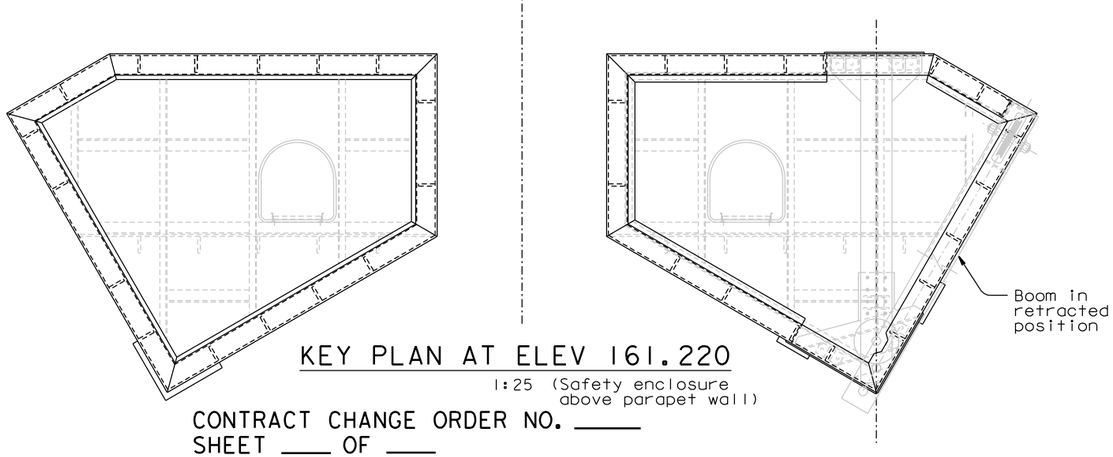

KEY PLAN AT ELEV 161.220

1:25 (Safety enclosure above parapet wall)

CONTRACT CHANGE ORDER NO. ____
SHEET ____ OF ____

REQUESTS FOR INFORMATION NOT ADDRESSED IN THIS CCO REMAIN IN FORCE

NOTES:

1. For Sections A-A, B-B and View C-C, see "Tower Elevator Enclosure Details No.7" sheet.
2. For Enclosure Screen Bolted Alternate Detail, see "Tower Enclosure Details No.7" sheet.

MARK	DATE	DESCRIPTIONS	BY	CH'D	CCO#
2	01/15/13	ADDITIONAL MISCELLANEOUS ELEVATOR DETAILS	NV	MN	174S1
1	05/16/12	TOWER ELEVATOR SAFETY ENCLOSURE	NV	MN	203S2
0	11/04/11	TOWER ELEVATOR SAFETY ENCLOSURE	NV	MN	203S2

REVISIONS

R. Valizadeh/V. Toan/Y.L./W.L./F.C.
DESIGN OVERSIGHT
SIGN OFF DATE 01/19/13

	BY	CHECKED
DESIGN	N. Vo	M. Nader
DETAILS	N. Vo	A. Baumberger
QUANTITIES	N. Vo	J. Duxbury

PREPARED FOR THE STATE OF CALIFORNIA DEPARTMENT OF TRANSPORTATION

ALL DIMENSIONS ARE IN MILLIMETERS UNLESS OTHERWISE SHOWN

R. Manzanarez
PROJECT ENGINEER

BRIDGE NO. 34-0006L/R
KILOMETER POST 13.2/13.9

SAN FRANCISCO OAKLAND BAY BRIDGE
EAST SPAN SEISMIC SAFETY PROJECT
SELF-ANCHORED SUSPENSION BRIDGE
(SUPERSTRUCTURE & TOWER)

TOWER ELEVATOR ENCLOSURE DETAILS NO.6

Rev. Date: 5-18-98

ORIGINAL SCALE IN MILLIMETERS FOR REDUCED PLANS 0 10 20 30 40 50 60 70 80 90 100

CU 04
EA 0120F1

DISREGARD PRINTS BEARING EARLIER REVISION DATES 11/04/11

REVISION DATES (PRELIMINARY STAGE ONLY)

SHEET 623S4BR2 OF

FILE => I:\bb\04-012001\sas\contract plans and cco\cco\cco#174s1\1-original 01-15-13\dgn\akelel2.dgn

100 % PS&E

USERNAME => DWinrow DATE PLOTTED => 15 JAN 2013 TIME PLOTTED => 10:18:49