DIST.	COUNTY	ROUTE	KILOMETER POST TOTAL PROJECT	SHEET NO.	TOTAL SHEETS
04	SF	80	13.2/13.9	940S3R2	1204

REGISTERED ENGINEER - CIVIL

08-19-11
PLANS APPROVAL DATE

The State of California or its officers or agents shall not be responsible for the accuracy or completeness of electronic copies of this plan sheet.

REGISTERED PROFESSIONAL ENGINEER Tien Hung Ho No. C 43990 Exp. 06/30/13 CIVIL STATE OF CALIFORNIA

T.Y. LIN / MOFFATT & NICHOL
825 BATTERY STREET
SAN FRANCISCO, CA 94111

Caltrans now has a web site! To get to the web site, go to: http://www.dot.ca.gov

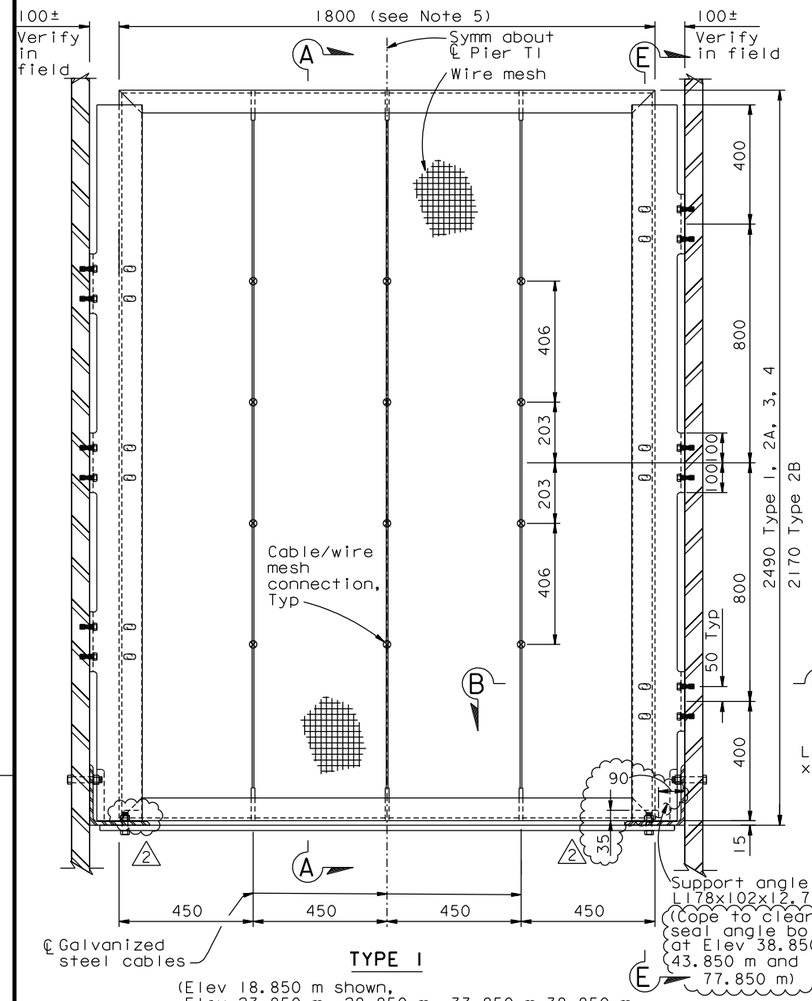

TYPE 1

(Elev 18.850 m shown, Elev 23.850 m, 28.850 m, 33.850 m 38.850 m, 43.850 m, 65.850 m, 77.850 m similar)

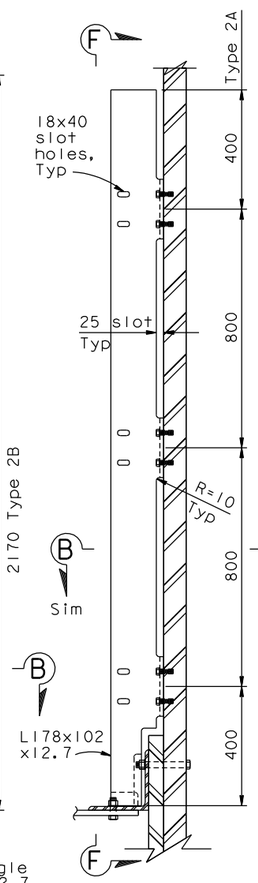

TYPE 2A*

(Elev 99.850 m shown, Elev 109.850 m similar)

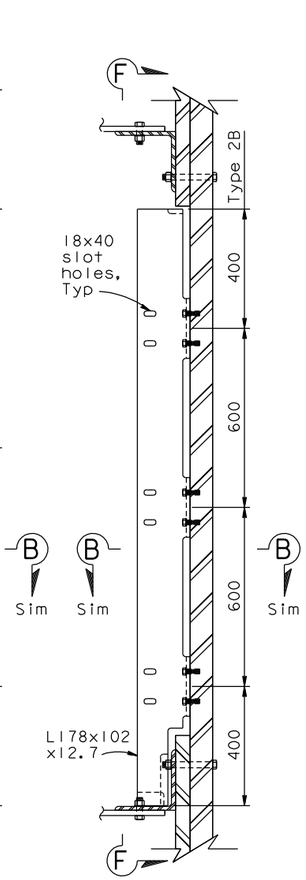

TYPE 2B*

(Elev 119.850 m shown, Elev 123.850 m, 131.850 m, 135.850 m similar)

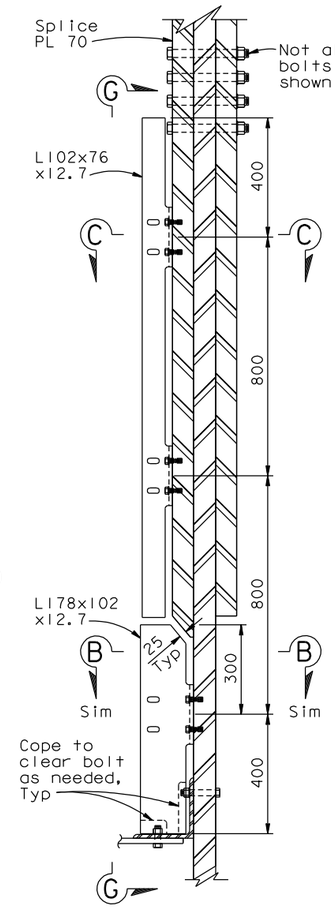

TYPE 3*

(Elev 48.450 m shown)

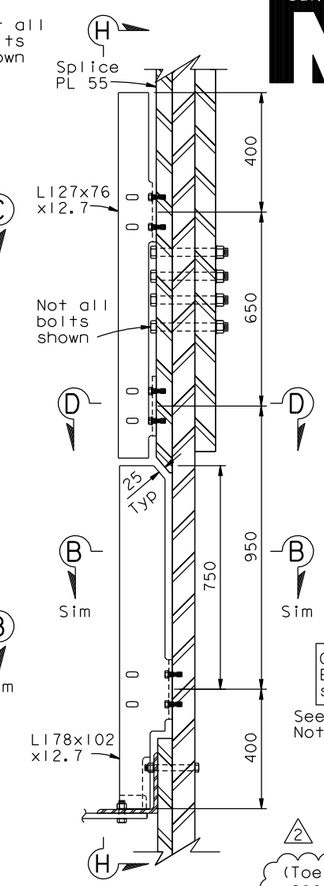

TYPE 4*

(Elev 143.850 m shown)

SAFETY ENCLOSURE DETAILS

1:10

(Looking north towards elevator)

(*See Type 1 for details not shown)

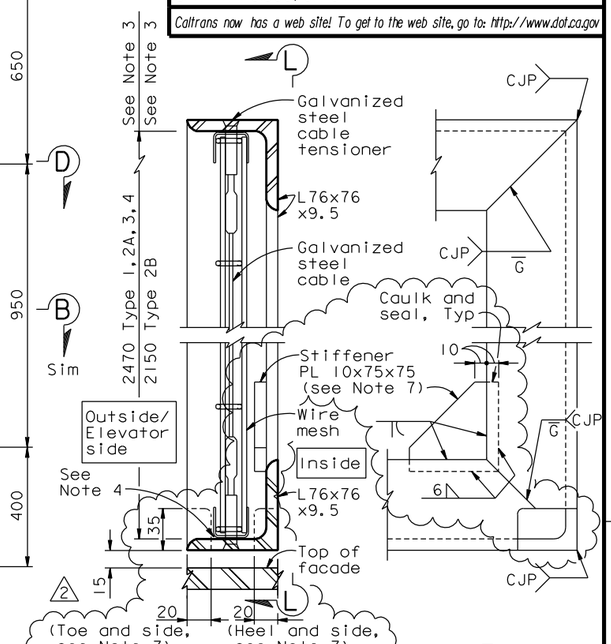

SECTION A-A

1:2.5

VIEW L-L

1:2.5

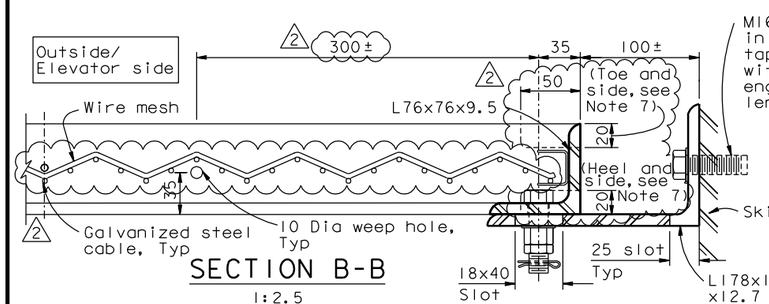

SECTION B-B

1:2.5

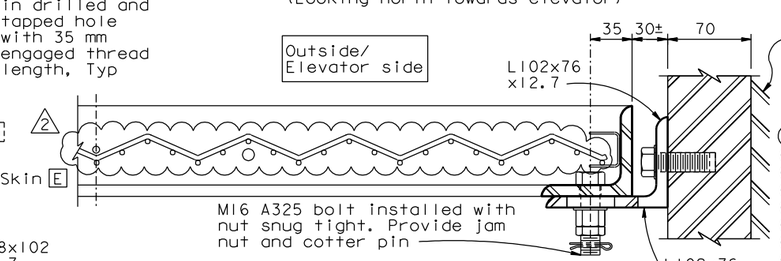

SECTION C-C

1:2.5

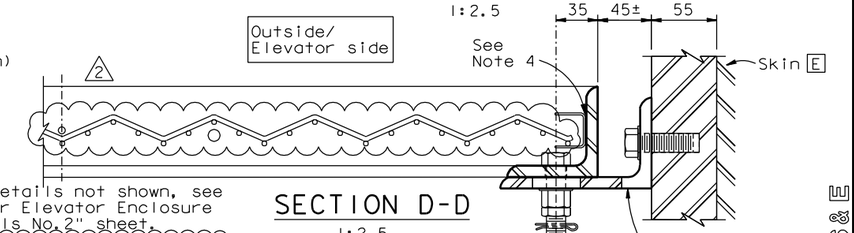

SECTION D-D

1:2.5

6. For details not shown, see "Tower Elevator Enclosure Details No. 2" sheet.
7. Cope toe and side of 76x76x9.5 angles to clear seal angle bolts at Elev 33.850 m, 38.850 m, 43.850 m, 65.850 m and 77.850 m. Cope heel and side of 76x76x9.5 angles to clear seal angle bolts at Elev 38.850 m, 43.850 m and 77.850 m. Stiffener PL shall be added at coped locations. Field verify all dimensions prior to fabrication.

ALL DIMENSIONS ARE IN MILLIMETERS UNLESS OTHERWISE SHOWN

NOTES:

1. For Sections E-E, F-F, G-G, H-H, see "Tower Elevator Enclosure Details No. 4" sheet.
2. Attachment of wire mesh to steel frames shall be per wire mesh manufacturer's requirements.
3. Vertical clear height of steel frames shall be adjusted to receive the wire mesh U-band frame.
4. Welding of wire mesh U-band frame to steel frame shall be in accordance with wire mesh manufacturer's recommendations.
5. Width of steel frames shall be adjusted to receive the wire mesh with U-band frame.

CONTRACT CHANGE ORDER NO. ____
SHEET ____ OF ____

REQUESTS FOR INFORMATION NOT ADDRESSED IN THIS CCO REMAIN IN FORCE

MARK	DATE	DESCRIPTIONS	BY	CH'D	CCO#
2	01/15/13	ADDITIONAL MISCELLANEOUS ELEVATOR DETAILS	GM	TH	174S1
1	11/03/11	ELEVATOR DETAILS	GM	TH	85
0	08/19/11	ELEVATOR DETAILS	GM	TH	85

REVISIONS

R. Valizadeh/V. Toan/Y.L./W.L./F.C.
DESIGN OVERSIGHT
SIGN OFF DATE 01/15/13

	BY	CHECKED
DESIGN	G. Mok	T. Ho
DETAILS	G. Mok	T. Ho
QUANTITIES	G. Mok	T. Ho

PREPARED FOR THE STATE OF CALIFORNIA DEPARTMENT OF TRANSPORTATION

R. Manzanarez
PROJECT ENGINEER

BRIDGE NO. 34-0006L/R
KILOMETER POST 13.2/13.9

SAN FRANCISCO OAKLAND BAY BRIDGE
EAST SPAN SEISMIC SAFETY PROJECT
SELF-ANCHORED SUSPENSION BRIDGE
(SUPERSTRUCTURE & TOWER)

TOWER ELEVATOR ENCLOSURE DETAILS NO. 3

Rev. Date: 5-18-98

ORIGINAL SCALE IN MILLIMETERS FOR REDUCED PLANS 0 10 20 30 40 50 60 70 80 90 100

CU 04
EA 0120F1

DISREGARD PRINTS BEARING EARLIER REVISION DATES 08/19/11

REVISION DATES (PRELIMINARY STAGE ONLY)

SHEET 623S3R2 OF

FILE => I:\bb\04-012001\sas\contract plans and cco\cco\cco*174s1\1-original 01-15-13\dgn\akele05.dgn

100% PS&E

USERNAME => DWinrow DATE PLOTTED => 15 JAN 2013 TIME PLOTTED => 10:13:41