DIST.	COUNTY	ROUTE	KILOMETER POST TOTAL PROJECT	SHEET NO.	TOTAL SHEETS
04	SF	80	13.2/13.9	940S2R2	1204

REGISTERED ENGINEER - CIVIL

08-19-11
PLANS APPROVAL DATE

REGISTERED PROFESSIONAL ENGINEER Tien Hung Ho No. C 43990 Exp. 06/30/13 CIVIL STATE OF CALIFORNIA

The State of California or its officers or agents shall not be responsible for the accuracy or completeness of electronic copies of this plan sheet.

T.Y. LIN / MOFFATT & NICHOL
825 BATTERY STREET
SAN FRANCISCO, CA 94111

Caltrans now has a web site! To get to the web site, go to: http://www.dot.ca.gov

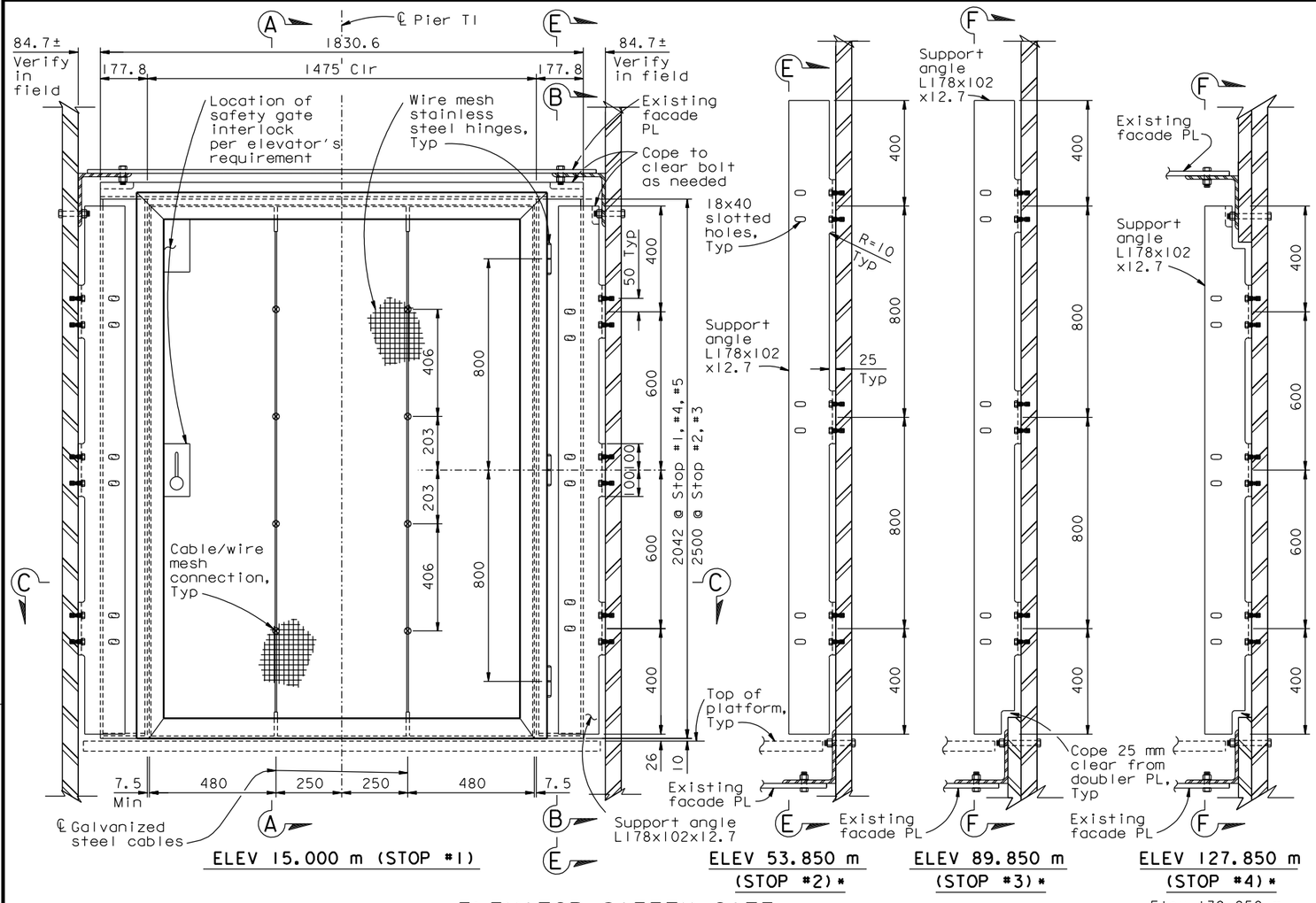

ELEVATOR SAFETY GATE

1:10 (*See Stop #1 for details not shown)
(Looking north towards elevator)

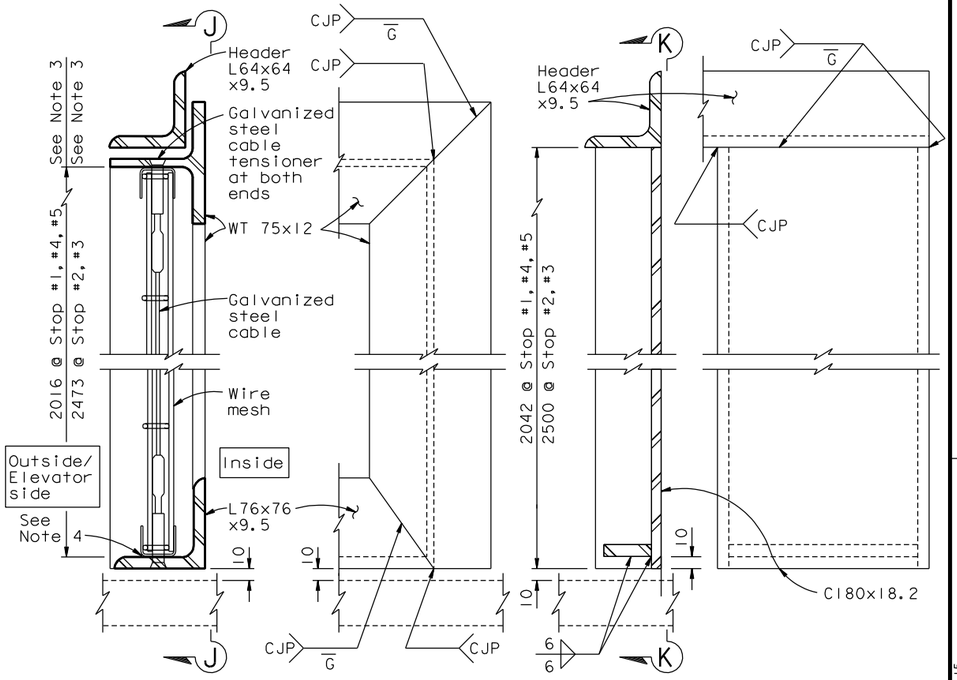

SECTION A-A 1:2.5

VIEW J-J 1:2.5 (Header not shown for clarity)

SECTION B-B 1:2.5

VIEW K-K 1:2.5 (Support angle not shown for clarity)

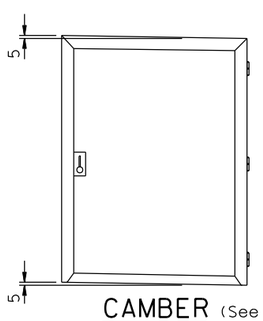

CAMBER (See Note 1)
NTS

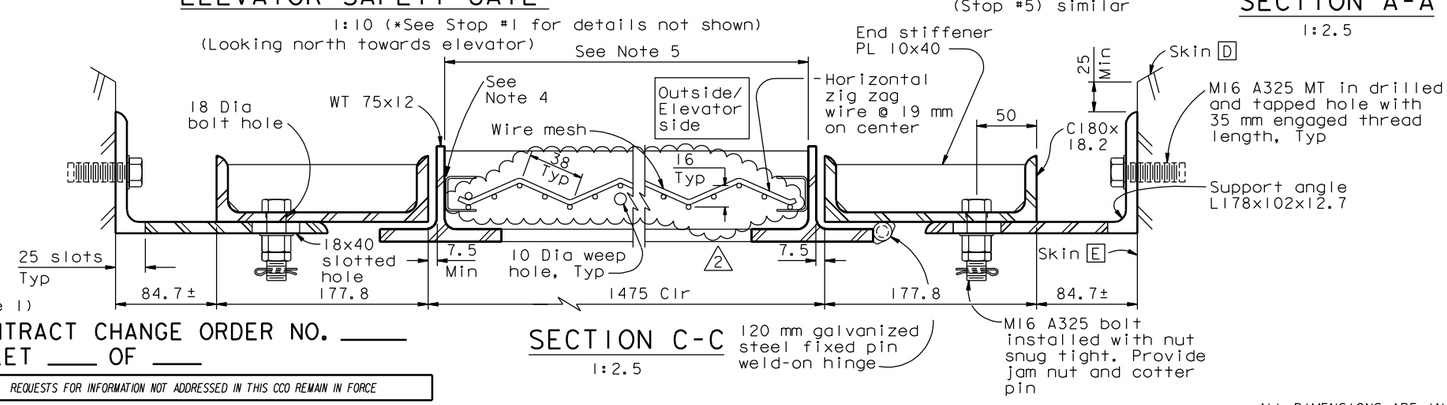

SECTION C-C 1:2.5

NOTES:

1. Provide 5 mm camber to account for self weight deflection of safety gate.
2. For Section E-E & F-F, see "Tower Elevator Enclosure Detail No.4" sheet.
3. Vertical height of steel frames shall be adjusted to receive the horizontal zigzag wires with U-band frame at top and bottom.
4. Welding of wire mesh U-band frame to steel frame shall be in accordance with wire mesh manufacturer's recommendations.
5. Width of steel frames shall be adjusted to receive the wire mesh with U-band frame.

CONTRACT CHANGE ORDER NO. ____
SHEET ___ OF ___

REQUESTS FOR INFORMATION NOT ADDRESSED IN THIS CCO REMAIN IN FORCE

MARK	DATE	DESCRIPTIONS	BY	CH'D	CCO#
2	01/15/13	ADDITIONAL MISCELLANEOUS ELEVATOR DETAILS	GM	TH	174S1
1	11/03/11	ELEVATOR DETAILS	GM	TH	85
0	08/19/11	ELEVATOR DETAILS	GM	TH	85

REVISIONS

R. Valizadeh/V. Toan/Y.L./W.L./F.C.
DESIGN OVERSIGHT
SIGN OFF DATE 01/19/13

	BY	CHECKED
DESIGN	G. Mok	T. Ho
DETAILS	G. Mok	T. Ho
QUANTITIES	G. Mok	T. Ho

PREPARED FOR THE STATE OF CALIFORNIA DEPARTMENT OF TRANSPORTATION

ALL DIMENSIONS ARE IN MILLIMETERS UNLESS OTHERWISE SHOWN

R. Manzanarez
PROJECT ENGINEER

BRIDGE NO. 34-0006L/R
KILOMETER POST 13.2/13.9

SAN FRANCISCO OAKLAND BAY BRIDGE
EAST SPAN SEISMIC SAFETY PROJECT
SELF-ANCHORED SUSPENSION BRIDGE
(SUPERSTRUCTURE & TOWER)

TOWER ELEVATOR ENCLOSURE DETAILS NO.2

Rev. Date: 5-18-98

ORIGINAL SCALE IN MILLIMETERS FOR REDUCED PLANS 0 10 20 30 40 50 60 70 80 90 100

CU 04
EA 0120F1

DISREGARD PRINTS BEARING EARLIER REVISION DATES 08/19/11

REVISION DATES (PRELIMINARY STAGE ONLY)

SHEET 523S2R2 OF

FILE => I:\bb\04-012001\sas\contract plans and cco\cco\cco#174s1\1-original 01-15-13\dgn\akele04.dgn

USERNAME => DWinrow DATE PLOTTED => 15 JAN 2013 TIME PLOTTED => 10:12:15

100 % PS&E