DIST.	COUNTY	ROUTE	KILOMETER POST TOTAL PROJECT	SHEET NO.	TOTAL SHEETS
04	SF	80	13.2/13.9	938S5	1204

Caltrans Metric

REGISTERED ENGINEER - CIVIL

03-25-11
PLANS APPROVAL DATE

REGISTERED PROFESSIONAL ENGINEER Tien Hung Ho No. C 43990 Exp. 06/30/11 CIVIL STATE OF CALIFORNIA

The State of California or its officers or agents shall not be responsible for the accuracy or completeness of electronic copies of this plan sheet.

T.Y. LIN / MOFFATT & NICHOL
825 BATTERY STREET
SAN FRANCISCO, CA 94111

Caltrans now has a web site! To get to the web site, go to: http://www.dot.ca.gov

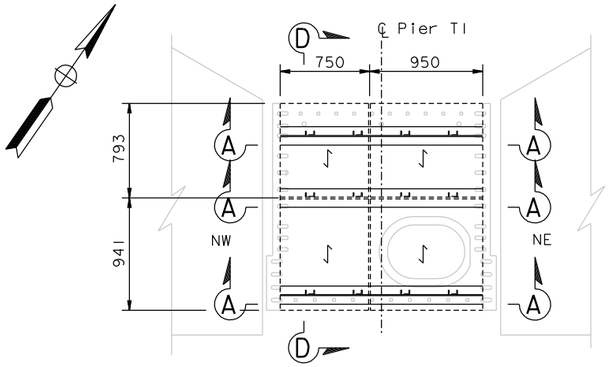

EL 89.85

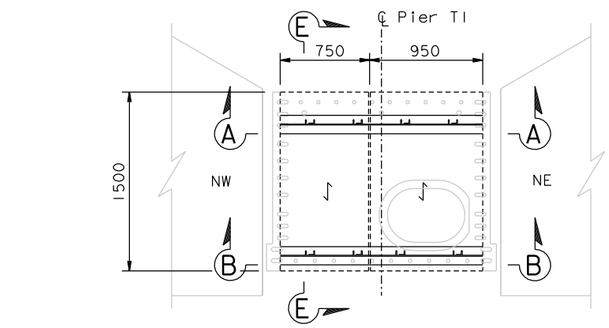

EL 127.85

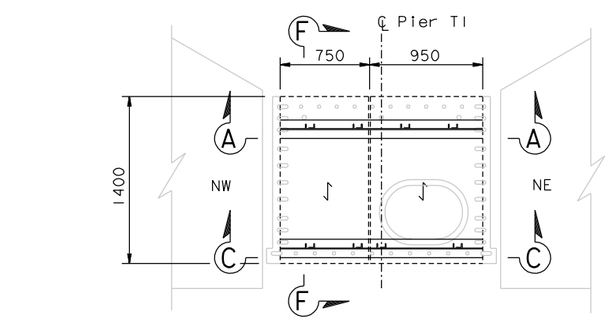

EL 139.85

PLAN AT TOP OF REMOVABLE GRATING
1:25

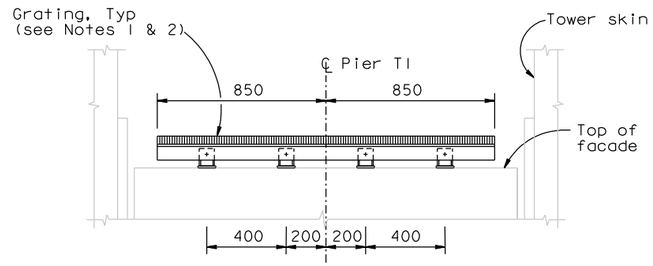

SECTION A-A
1:15

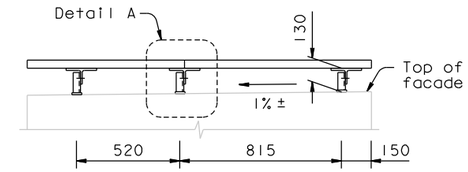

SECTION D-D
1:15

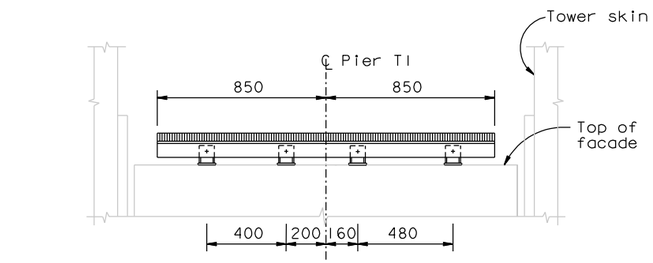

SECTION B-B
1:15

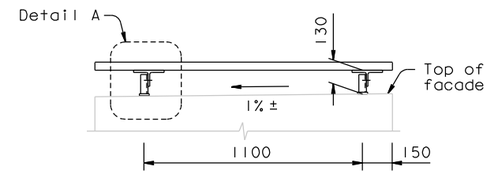

SECTION E-E
1:15

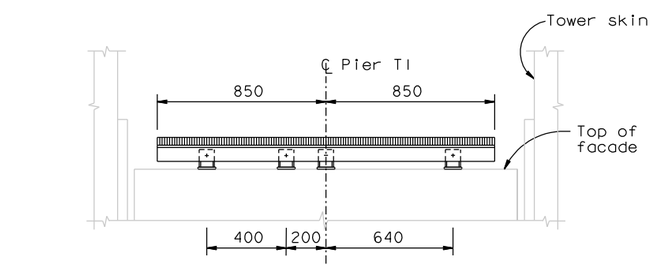

SECTION C-C
1:15

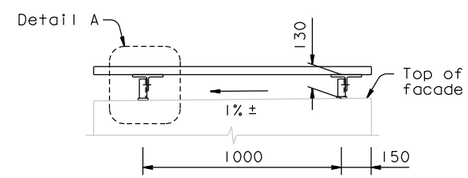

SECTION F-F
1:15

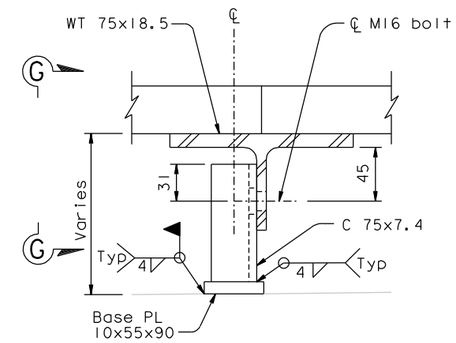

DETAIL A
1:2.5

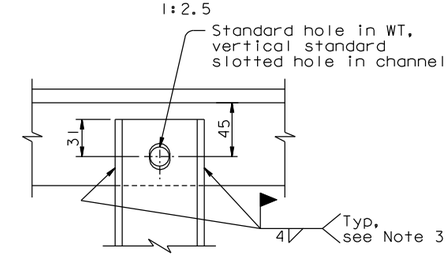

SECTION G-G
1:2.5

LEGEND:

Direction of bearing bars

or Grating edges

NOTES:

1. The Contractor shall provide fiberglass grating with fasteners. The grating shall be rated to support 5 kN/m2 loading with deflection not greater than 1 mm.
2. The top of the grating shall be level.
3. Welding of channel to WT shall be performed after top of WT is level.

CONTRACT CHANGE ORDER NO. _____
SHEET ____ OF ____

REQUESTS FOR INFORMATION NOT ADDRESSED IN THIS CCO REMAIN IN FORCE

ALL DIMENSIONS ARE IN MILLIMETERS UNLESS OTHERWISE SHOWN

R. Valizadeh/V. Toan/Y.L./W.L./F.C.
DESIGN OVERSIGHT
SIGN OFF DATE 03/25/11

MARK	DATE	DESCRIPTIONS	BY	CH'D	CCO#
0	03/25/11	MISCELLANEOUS ELEVATOR DETAILS	TH	NV	174

REVISIONS

DESIGN	BY T. Ho	CHECKED	N. Vo
DETAILS	BY C. Neff	CHECKED	A. Baumberger
QUANTITIES	BY C. Neff	CHECKED	A. Baumberger

PREPARED FOR THE STATE OF CALIFORNIA DEPARTMENT OF TRANSPORTATION

R. Manzanarez
PROJECT ENGINEER

BRIDGE NO. 34-0006L/R
KILOMETER POST 13.2/13.9

SAN FRANCISCO OAKLAND BAY BRIDGE
EAST SPAN SEISMIC SAFETY PROJECT
SELF-ANCHORED SUSPENSION BRIDGE
(SUPERSTRUCTURE & TOWER)

TOWER ACCESS DETAILS NO. 27

Rev. Date: 5-18-98

ORIGINAL SCALE IN MILLIMETERS FOR REDUCED PLANS 0 10 20 30 40 50 60 70 80 90 100

CU 04
EA 0120F1

DISREGARD PRINTS BEARING EARLIER REVISION DATES

REVISION DATES (PRELIMINARY STAGE ONLY) 03/25/11

SHEET 521S5 OF

FILE => I:\bb\04-01200I\sas\contract plans and cco\cco\cco#174\2-revision 03-25-11\dgn\akacc22e.dgn

100 % PS&E

DATE PLOTTED => 25 MAR 2011 TIME PLOTTED => 12:10:26

USERNAME => PTom