| DIST. | COUNTY | ROUTE | KILOMETER POST TOTAL PROJECT | SHEET NO. | TOTAL SHEETS |
|---|---|---|---|---|---|
| 04 | SF | 80 | 13.2/13.9 | 939R3 | 1204 |

George Baker
REGISTERED ENGINEER - CIVIL
12-6-04
PLANS APPROVAL DATE

REGISTERED PROFESSIONAL ENGINEER George S. Baker No. C 57112 Exp. 12/31/05 CIVIL STATE OF CALIFORNIA

*The State of California or its officers or agents shall not be responsible for the accuracy or completeness of electronic copies of this plan sheet.*

T.Y. LIN / MOFFATT & NICHOL
825 BATTERY STREET
SAN FRANCISCO, CA 94111

*Caltrans now has a web site! To get to the web site, go to: http://www.dot.ca.gov*

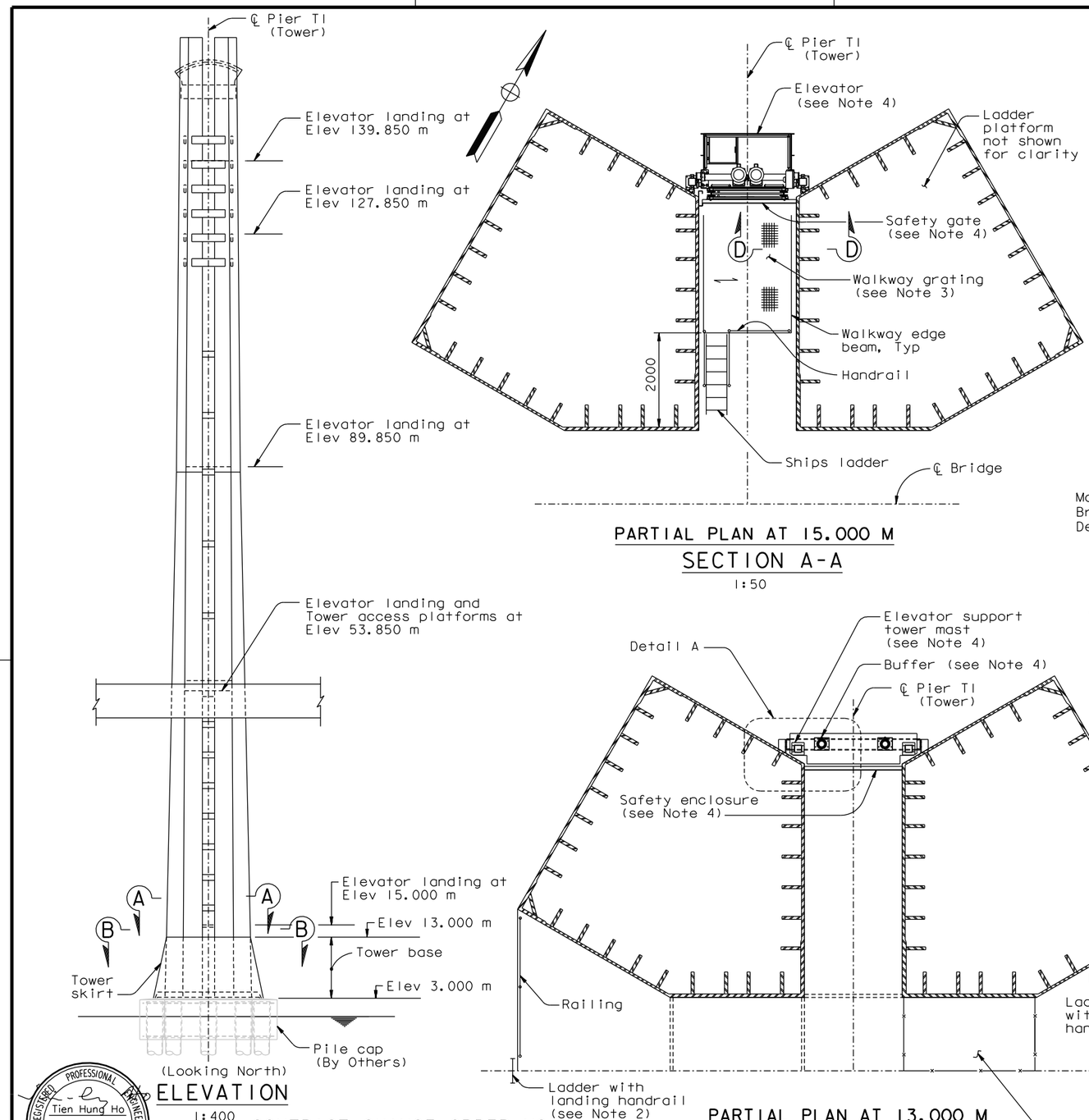


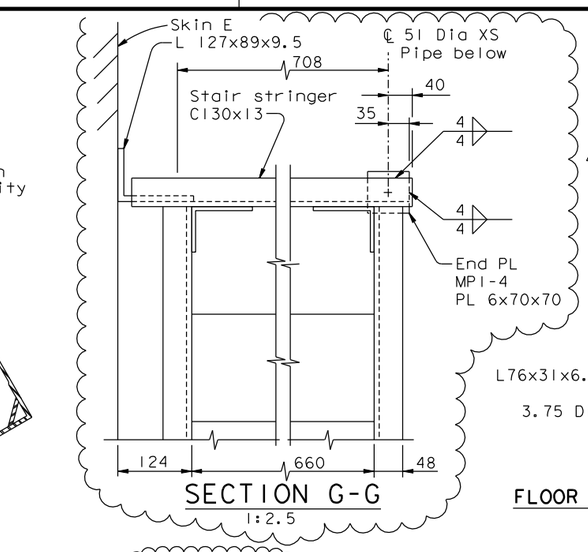


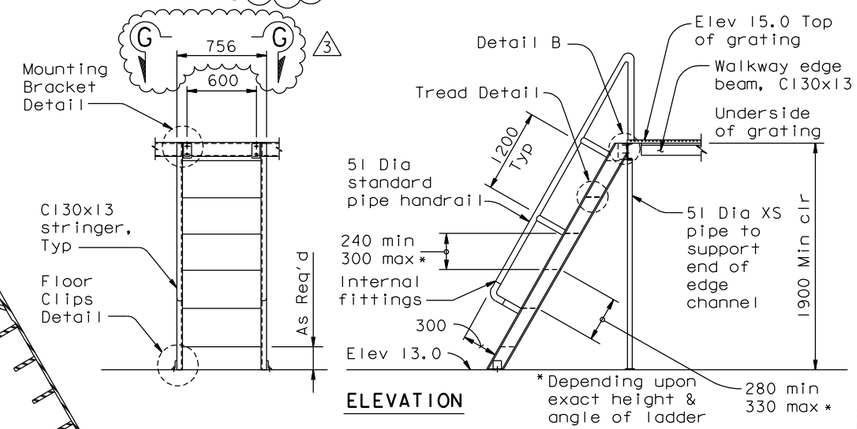


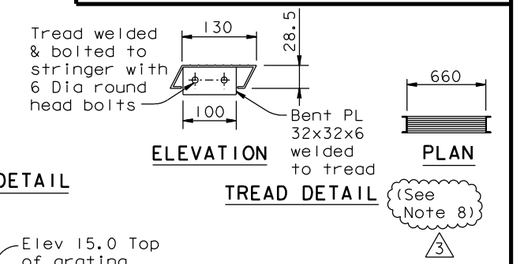


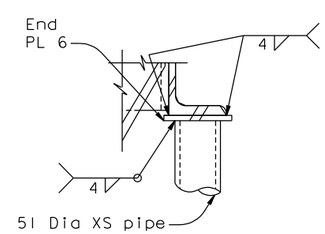


NOTES:

1. For elevator landing details at elevations 139.850 and 89.850, see "Tower Access Details No.3" sheet.
2. For ladder and landing handrail details, see "Tower Access Details No.7" sheet. For railing details, see Tower Access Details No.8" sheet.
3. Gratings at elevation 15.000 shall have a working load of 7 kN/m (145psf).
4. For elevator and elevator appurtenances, see "Road Plans" sheets.
5. (NOTE DELETED)
6. For elevator landing details at elevation 53.850, see "Tower Access Details No.10" sheet.
7. For Detail A, Section C-C and Section D-D, see "Tower Elevator Support Details No.2" sheet.
8. At the Contractor's option, stair treads may be C130x13. The top outward facing corner of each channel shall be ground to radius of 3 mm. Tread shall be provided with a slip-resistant surface.
9. At the Contractor's option, C130x10.4 may be used for the platform grating support beam at top of stairway only.

REGISTERED PROFESSIONAL ENGINEER Tien Hung Ho No. C 43990 Exp. 06/30/11 CIVIL STATE OF CALIFORNIA

FOR REVISIONS ONLY

CONTRACT CHANGE ORDER NO. ____
SHEET ____ OF ____

*REQUESTS FOR INFORMATION NOT ADDRESSED IN THIS CCO REMAIN IN FORCE*

| MARK | DATE | DESCRIPTIONS | BY | CH'D | CCO# |
|---|---|---|---|---|---|
| 3 | 05/25/11 | MISCELLANEOUS ELEVATOR DETAILS | TH | MN | 174 |
| 2 | 10/15/10 | HANDRAIL AND PLATFORMS | TH | MN | 114 |
| 1 | 07/17/09 | ELEVATOR DETAILS | TH | MN | 85 |

REVISIONS

R. Valizadeh/V. Toan/Y.L./W.L./F.C.
DESIGN OVERSIGHT
Y. Liu
SIGN OFF DATE 05/25/11

| | BY | CHECKED |
|---|---|---|
| DESIGN | G. Baker | L. Rus |
| DETAILS | S. Camo | L. Rus |
| QUANTITIES | D. Turner | J. Leventini |

PREPARED FOR THE STATE OF CALIFORNIA DEPARTMENT OF TRANSPORTATION

R. Manzanarez
PROJECT ENGINEER

ALL DIMENSIONS ARE IN MILLIMETERS UNLESS OTHERWISE SHOWN

BRIDGE NO. 34-0006L/R
KILOMETER POST 13.2/13.9

SAN FRANCISCO OAKLAND BAY BRIDGE
EAST SPAN SEISMIC SAFETY PROJECT
SELF-ANCHORED SUSPENSION BRIDGE
(SUPERSTRUCTURE & TOWER)

# TOWER ELEVATOR SUPPORT DETAILS NO. 1

Rev. Date: 5-18-98

ORIGINAL SCALE IN MILLIMETERS FOR REDUCED PLANS 0 10 20 30 40 50 60 70 80 90 100

CU 04
EA 0120F1

DISREGARD PRINTS BEARING EARLIER REVISION DATES 04/08/02 07/01/02 12/19/02 11/13/05

SHEET 522R3 OF

FILE => I:\bb\04-012001\sas\contract plans and cco\cco\cco#174\3-update 05-25-11\dgn\akele01.dgn

USERNAME => crivera DATE PLOTTED => 25 MAY 2011 TIME PLOTTED => 09:11:46

100 % PS&E