DIST.	COUNTY	ROUTE	KILOMETER POST TOTAL PROJECT	SHEET NO.	TOTAL SHEETS
04	SF	80	13.2/13.9	536R1	1204

REGISTERED ENGINEER - CIVIL

12-6-04
PLANS APPROVAL DATE

The State of California or its officers or agents shall not be responsible for the accuracy or completeness of electronic copies of this plan sheet.

REGISTERED PROFESSIONAL ENGINEER Marwan N. Nader No. C 054426 Exp. 12/31/11 CIVIL STATE OF CALIFORNIA

T.Y. LIN / MOFFATT & NICHOL
825 BATTERY STREET
SAN FRANCISCO, CA 94111

Caltrans now has a web site! To get to the web site, go to: http://www.dot.ca.gov

NOTES:

1. For Details D, E, F, G, H, I and J, see "Tower Shaft Details No.9" sheet.
2. Longitudinal stiffeners of adjacent skin plates are not shown for clarity.
3. For tower diaphragm at Elev 9.000 m and 13 m, see "Tower Diaphragm Details No.11" sheet.
4. For diaphragm to shear plate connection details, see "Tower Diaphragm Details No.13" sheet.
5. For tower anchorage details, see "Tower Anchorage Details" sheets.
6. For access openings details, see "Tower Access Details" sheets.
7. For elevation of diaphragm at 13 m, see "Tower Drainage Detail No.3" sheet.
8. Access openings in tower base shear plate [c] shall be on East side of tower only.
9. At the Contractor's option, temporary access openings may be provided at locations shown in shear plates [a1] only. The openings shall be closed with fill plates which shall be identical to the respective shear plate. The fill plates shall be CJP welded all around. △1

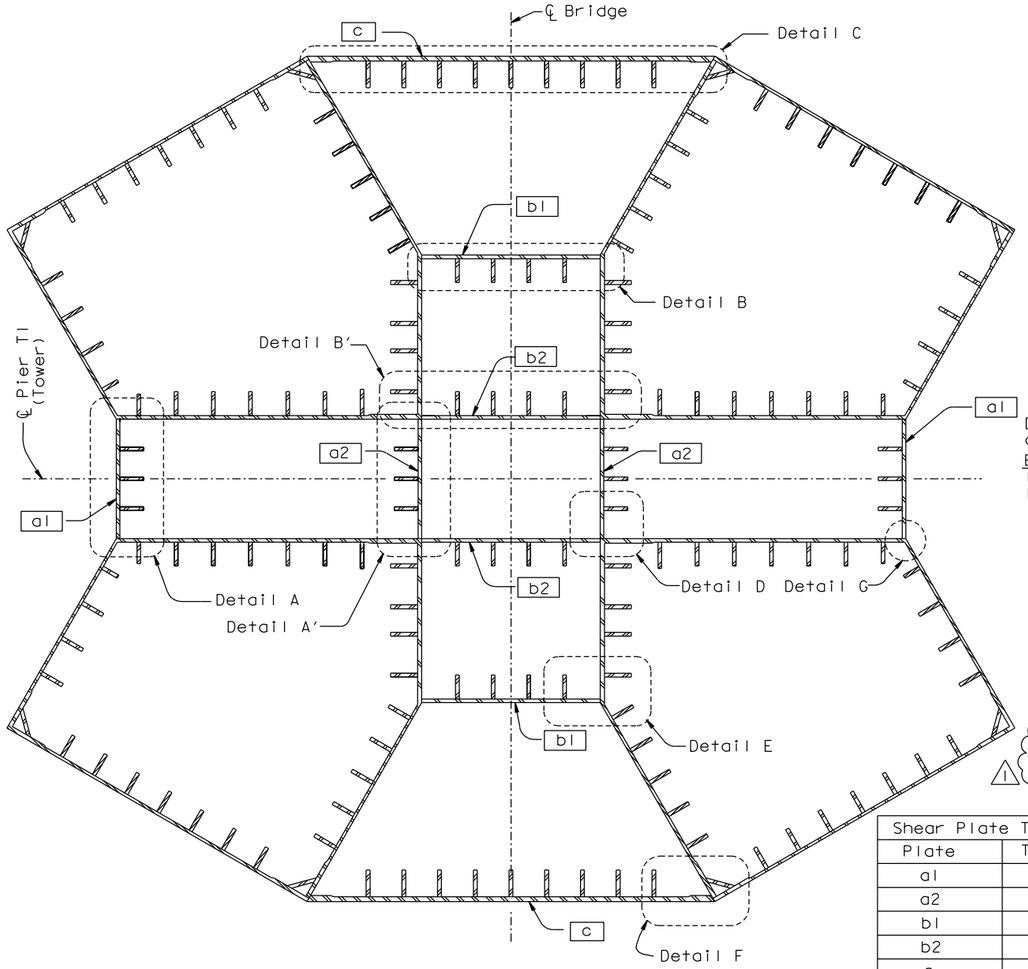

TYPICAL TOWER BASE CROSS SECTION

(Between Elev 3.125 m and Elev 13.000 m)
1:50

Shear Plate Thickness	
Plate	Thickness
a1	60 mm
a2	60 mm
b1	60 mm
b2	60 mm
c	80 mm
c at corner	100 mm

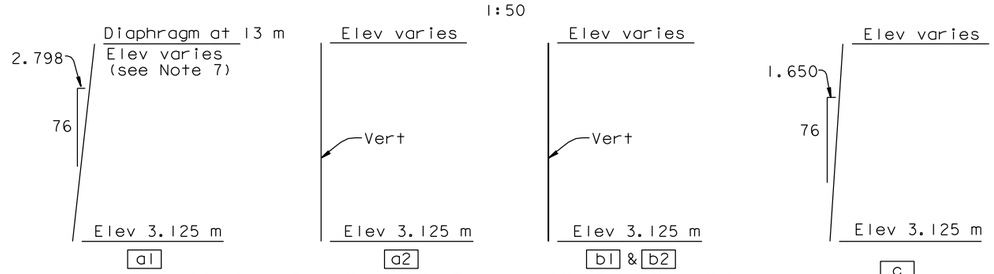

TOWER BASE SHEAR PLATE PROFILES

(Longitudinal stiffeners are not shown for clarity)
NTS

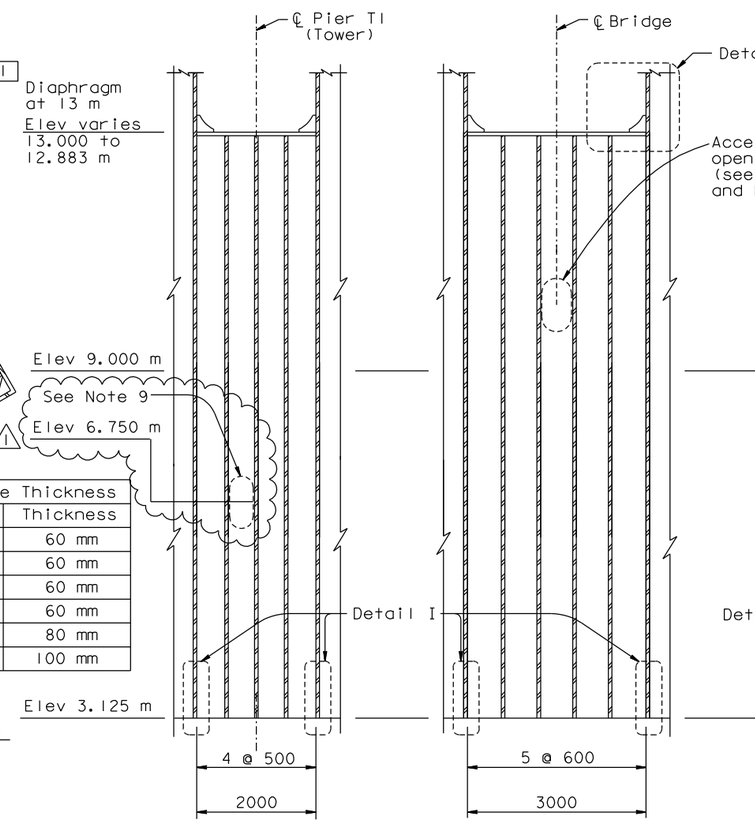

SECTION A-A

1:50

SECTION B-B

1:50

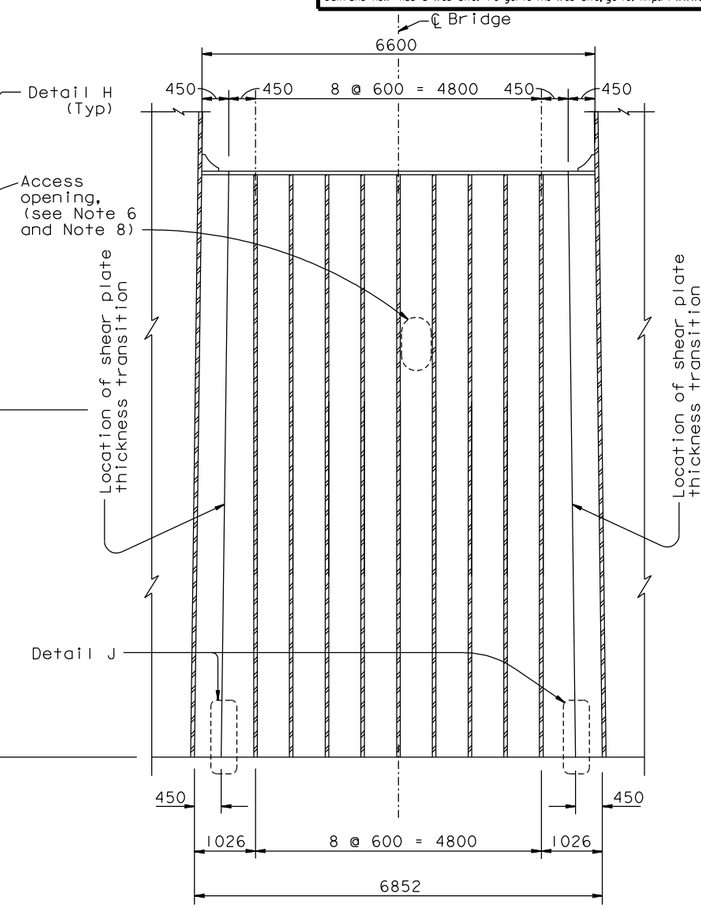

SECTION C-C

1:50

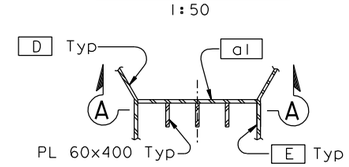

DETAIL A (Detail A' similar)

1:50

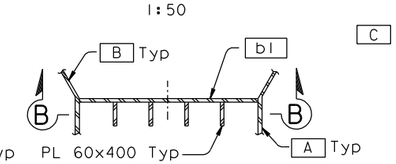

DETAIL B (Detail B' similar)

1:50

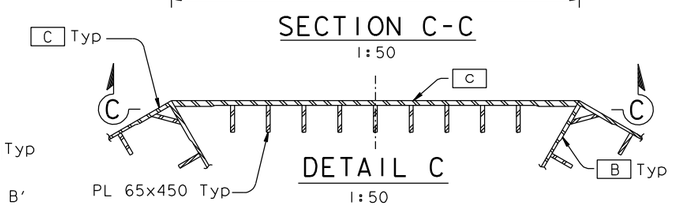

DETAIL C

1:50

ALL DIMENSIONS ARE IN MILLIMETERS UNLESS OTHERWISE SHOWN

CONTRACT CHANGE ORDER NO. _____
SHEET ____ OF ____

REQUESTS FOR INFORMATION NOT ADDRESSED IN THIS CCO REMAIN IN FORCE

R. Valizadeh/V. Toan/Y.L./W.L./F.C.
DESIGN OVERSIGHT
SIGN OFF DATE 12/10/10

MARK	DATE	DESCRIPTIONS	BY	CH'D	CCO#
1	12/10/10	MISCELLANEOUS ELEVATOR DETAILS	TH	MN	174

REVISIONS

	BY	CHECKED
DESIGN	M. Nader	M. Gulyas
DETAILS	L. Rus	M. Gulyas
QUANTITIES	L. Rus	Y. Zhang

PREPARED FOR THE STATE OF CALIFORNIA DEPARTMENT OF TRANSPORTATION

R. Manzanarez
PROJECT ENGINEER

BRIDGE NO. 34-0006L/R
KILOMETER POST 13.2/13.9

SAN FRANCISCO OAKLAND BAY BRIDGE
EAST SPAN SEISMIC SAFETY PROJECT
SELF-ANCHORED SUSPENSION BRIDGE
(SUPERSTRUCTURE & TOWER)

TOWER SHAFT DETAILS NO. 8

Rev. Date: 5-18-98

ORIGINAL SCALE IN MILLIMETERS FOR REDUCED PLANS 0 10 20 30 40 50 60 70 80 90 100

CU 04
EA 0120F1

DISREGARD PRINTS BEARING EARLIER REVISION DATES

REVISION DATES (PRELIMINARY STAGE ONLY): 05/15/99 08/02/99 05/31/01 04/08/02 07/18/02 12/18/02 11/13/05

SHEET 119R1 OF

FILE => I:\bb\04-012001\sas\contract plans and cco\cco\cco#174\1-original 12-10-10\dgn\aet1d08.dgn

100 % PS&E

USERNAME => DWinrow DATE PLOTTED => 10 DEC 2010 TIME PLOTTED => 09:49:15