DIST	COUNTY	ROUTE	KILOMETER POST TOTAL PROJECT	SHEET No	TOTAL SHEETS
04	SF	80	13.2/13.9	69R2	1204

Robert E. Bethel
REGISTERED MECHANICAL ENGINEER

12-6-04
PLANS APPROVAL DATE

REGISTERED PROFESSIONAL ENGINEER ROBERT E. BETHEL No. M018543 Exp. 9/30/06 MECHANICAL STATE OF CALIFORNIA

T.Y. LIN / MOFFATT & NICHOL
825 BATTERY STREET
SAN FRANCISCO, CA 94111

The State of California or its officers or agents shall not be responsible for the accuracy or completeness of electronic copies of this plan sheet.

Caltrans now has a web site! To get to the web site, go to: http://www.dot.ca.gov

Caltrans Metric

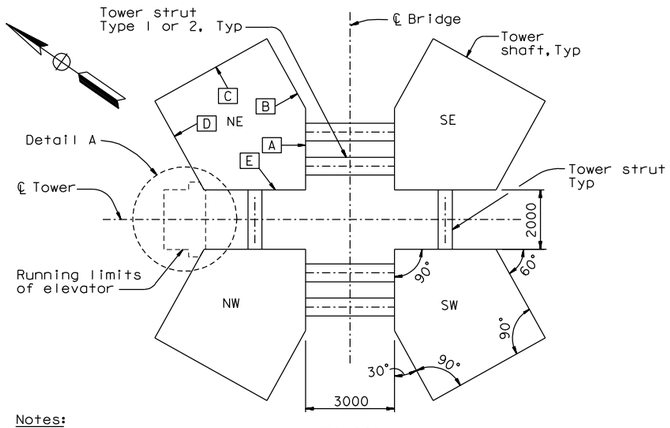

Notes:
1. For longitudinal elevation looking North see "Elevator Detail No. 2" Sheet.

PLAN
1:100

LEGEND:
NE Northeast tower shaft designation
A Tower shaft skin plate designation

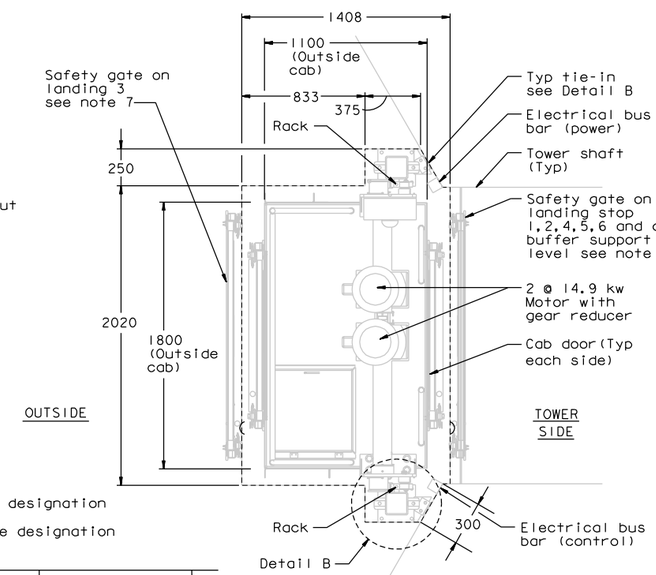

DETAIL A
1:20

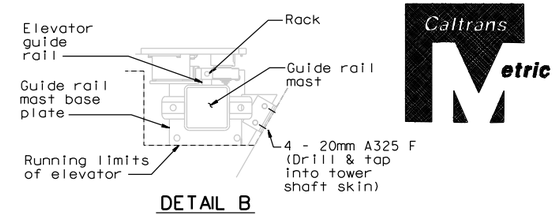

DETAIL B
(Plan Typ. Tie-In)
3048 max. Spacing
1:10

Notes:
1. Elevator to be USA Hoist Co., Inc. model 2000 DR, or approved equal, USA Hoist model 2000 DR shown.
2. Elevator to pass through running limits shown.
3. Elevator minimum clear inside dimensions shall be approximately 1676 wide x 965 deep x 2590 high.
4. Design wind velocity 190 km/hr at bridge deck.
5. Elevator minimum door size shall be 1065 wide x 2438 high (front) and 1475 wide x 2438 high (rear).
6. Elevator guide rail mast shall attach to tower shaft NE & NW skin plate D only at the locations shown in Detail B. No supports, bracing or drive mechanisms are permitted between tower shafts.
7. For safety gate details see Special Provisions.
8. For optional tower elevator stops, see "Elevator Detail No. 2" sheet.

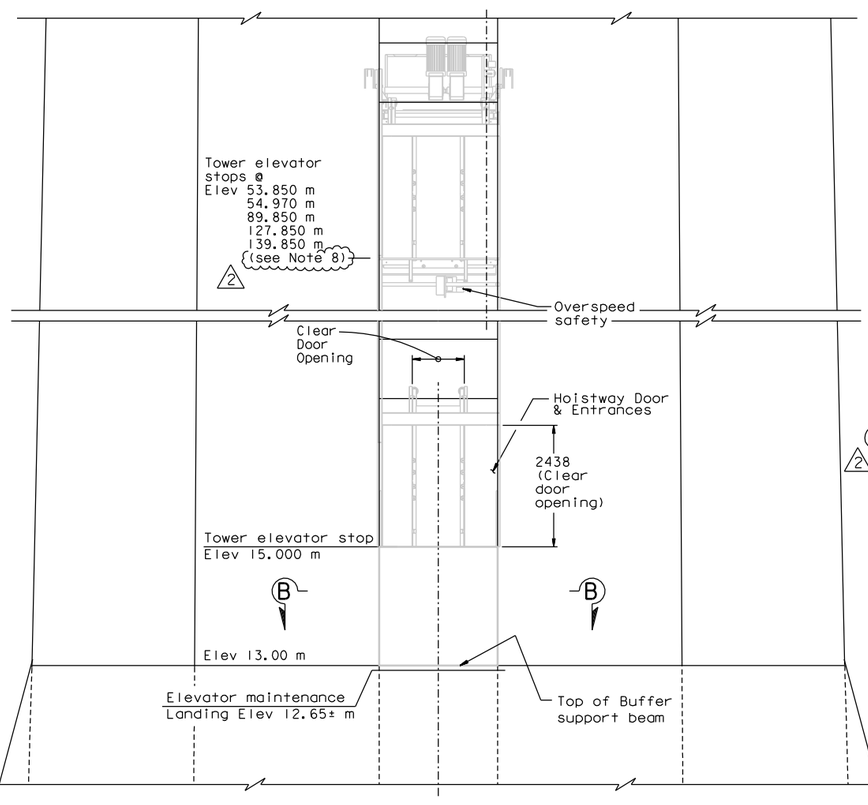

FRONT ELEVATION
Not To Scale

NOTES:
1. For tower shaft details, see Bridge Plans.
2. The elevator guide rail mast runs along the edge of tower shaft skin plate D
3. Details shown are for illustrative purposes only. Final design configuration and details, including guide rails and supports, are the responsibility of the elevator manufacturer.

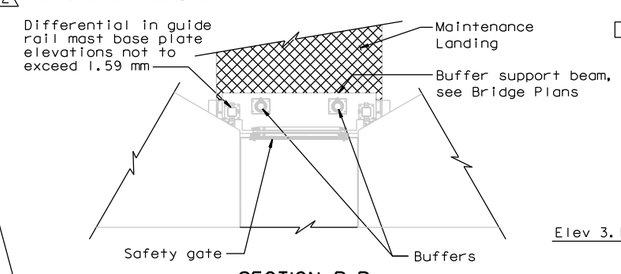

SECTION B-B
(Plan at Buffer Support)
1:50

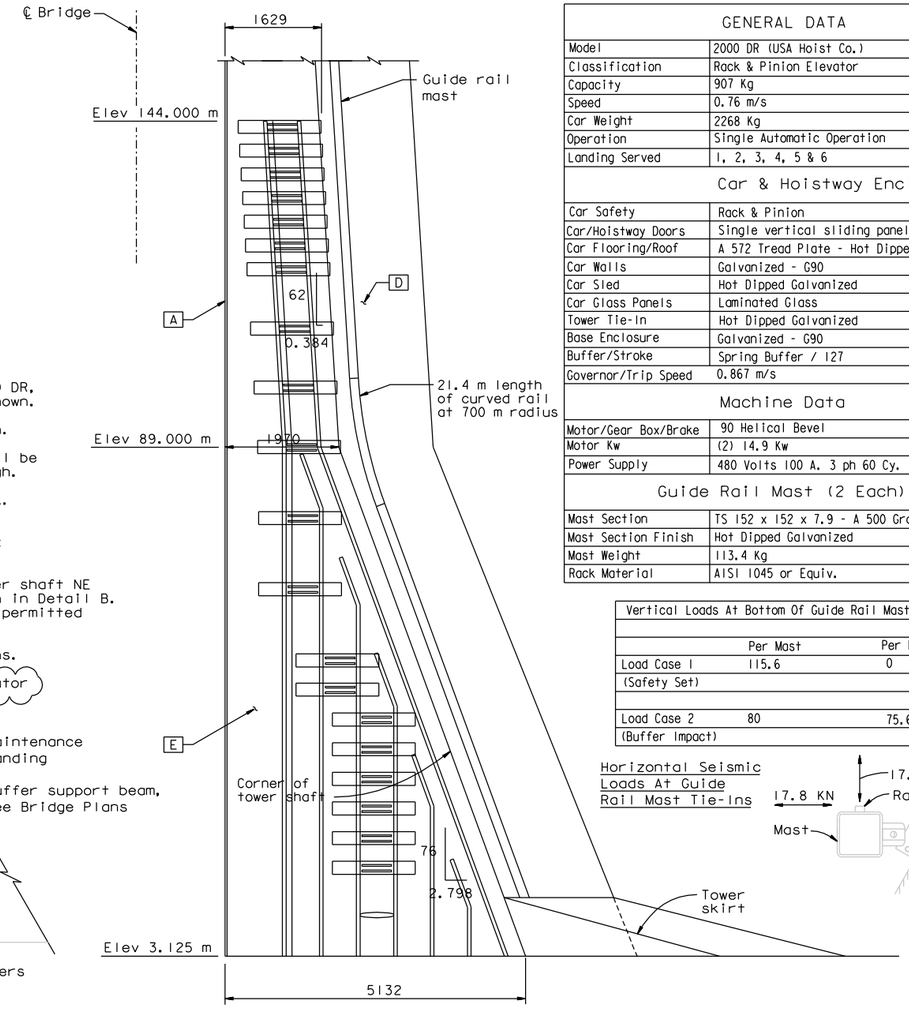

GUIDE RAIL GEOMETRY DEFINITION
Horiz=1:50
Vert =1:500

GENERAL DATA	
Model	2000 DR (USA Hoist Co.)
Classification	Rack & Pinion Elevator
Capacity	907 Kg
Speed	0.76 m/s
Car Weight	2268 Kg
Operation	Single Automatic Operation
Landing Served	1, 2, 3, 4, 5 & 6
Car & Hoistway Enclosure	
Car Safety	Rack & Pinion
Car/Hoistway Doors	Single vertical sliding panel
Car Flooring/Roof	A 572 Tread Plate - Hot Dipped Galvanized
Car Walls	Galvanized - G90
Car Sled	Hot Dipped Galvanized
Car Glass Panels	Laminated Glass
Tower Tie-In	Hot Dipped Galvanized
Base Enclosure	Galvanized - G90
Buffer/Stroke	Spring Buffer / 127
Governor/Trip Speed	0.867 m/s
Machine Data	
Motor/Gear Box/Brake	90 Helical Bevel
Motor Kw	(2) 14.9 Kw
Power Supply	480 Volts 100 A. 3 ph 60 Cy.
Guide Rail Mast (2 Each)	
Mast Section	TS 152 x 152 x 7.9 - A 500 Grade B
Mast Section Finish	Hot Dipped Galvanized
Mast Weight	113.4 Kg
Rack Material	AISI 1045 or Equiv.

Vertical Loads At Bottom Of Guide Rail Masts (KN)		
	Per Mast	Per Buffer
Load Case 1	115.6	0
(Safety Set)		
Load Case 2	80	75.6
(Buffer Impact)		

Horizontal Seismic Loads At Guide Rail Mast Tie-Ins

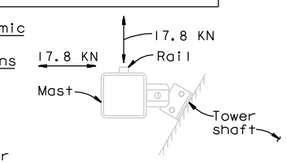

CONTRACT CHANGE ORDER NO. ____
SHEET ____ OF ____

REQUESTS FOR INFORMATION NOT ADDRESSED IN THIS CCO REMAIN IN FORCE

MARK	DATE	DESCRIPTIONS	BY	CH'D	CCO#
2	12/10/10	MISCELLANEOUS ELEVATOR DETAILS	JNB	FS	174
1	07/17/09	ELEVATOR DETAILS	JNB	FS	85

REVISIONS

REGISTERED PROFESSIONAL ENGINEER JAL BIRDY No. 41547 Exp. 12-31-11 CIVIL STATE OF CALIFORNIA

FOR REVISIONS 1 & 2 ONLY

ELEVATOR DETAIL NO. 1

ALL DIMENSION ARE IN MILLIMETERS UNLESS OTHERWISE SHOWN

M-33

	JNB	4/21/09	REVISED BY	DATE REVISED
ES	5/3/02	RB	5/3/02	
CALCULATED/DESIGNED BY		CHECKED BY		

DESIGN OVERSIGHT: Bob Zandipour

May 12, 2009

SAS STRUCTURE

STATE OF CALIFORNIA - DEPARTMENT OF TRANSPORTATION
Caltrans

LAST REVISION 00-00-00

DATE PLOTTED => 10 DEC 2010
TIME PLOTTED => 09:47:09

FOR REDUCED PLANS ORIGINAL SCALE IS IN MILLIMETERS 0 20 40 60 80

FILE => L:\BB\04-012001\SAS\Contract Plans and CCO\CCO\CCO#174\1-Original 12-10-10\DGN\40120fub033.dgn
USERNAME => DWinrow

CU 04251 EA 0120F1

DIST	COUNTY	ROUTE	KILOMETER POST TOTAL PROJECT	SHEET No	TOTAL SHEETS
04	SF	80	13.2/13.9	70R2	1204

Robert E Bethel
REGISTERED MECHANICAL ENGINEER

12-6-04
PLANS APPROVAL DATE

REGISTERED PROFESSIONAL ENGINEER ROBERT E. BETHEL No. M018543 Exp. 9/30/06 MECHANICAL STATE OF CALIFORNIA

T.Y. LIN / MOFFATT & NICHOL
825 BATTERY STREET
SAN FRANCISCO, CA 94111

The State of California or its officers or agents shall not be responsible for the accuracy or completeness of electronic copies of this plan sheet.

Caltrans now has a web site! To get to the web site, go to: http://www.dot.ca.gov

Caltrans Metric

CONTRACT CHANGE ORDER NO. ____
SHEET ____ OF ____

REQUESTS FOR INFORMATION NOT ADDRESSED IN THIS CCO REMAIN IN FORCE

MARK	DATE	DESCRIPTIONS	BY	CH'D	CCO#
2	12/10/10	MISCELLANEOUS ELEVATOR DETAILS	JNB	FS	174
1	07/17/09	ELEVATOR DETAILS	JNB	FS	85

REVISIONS

REGISTERED PROFESSIONAL ENGINEER JAL BIRDY No. 41547 Exp. 12-31-11 CIVIL STATE OF CALIFORNIA

FOR REVISIONS 1 & 2 ONLY

Notes:
1. Elevation of tower elevation stops are given at the foot level (tower strut facade top PL, tower diaphragm at elevation 13.000 m).
2. For tower strut facade details, see Bridge Plans.
3. For tower diaphragm at elevation 13.000 m details, see Bridge Plans.
4. When elevator is not in use, it shall be parked at elev 49.500
5. If optional permanent tower access openings are to be provided at these levels, tower elevator stops shall also be installed.

Legend:
Tower elevator stop

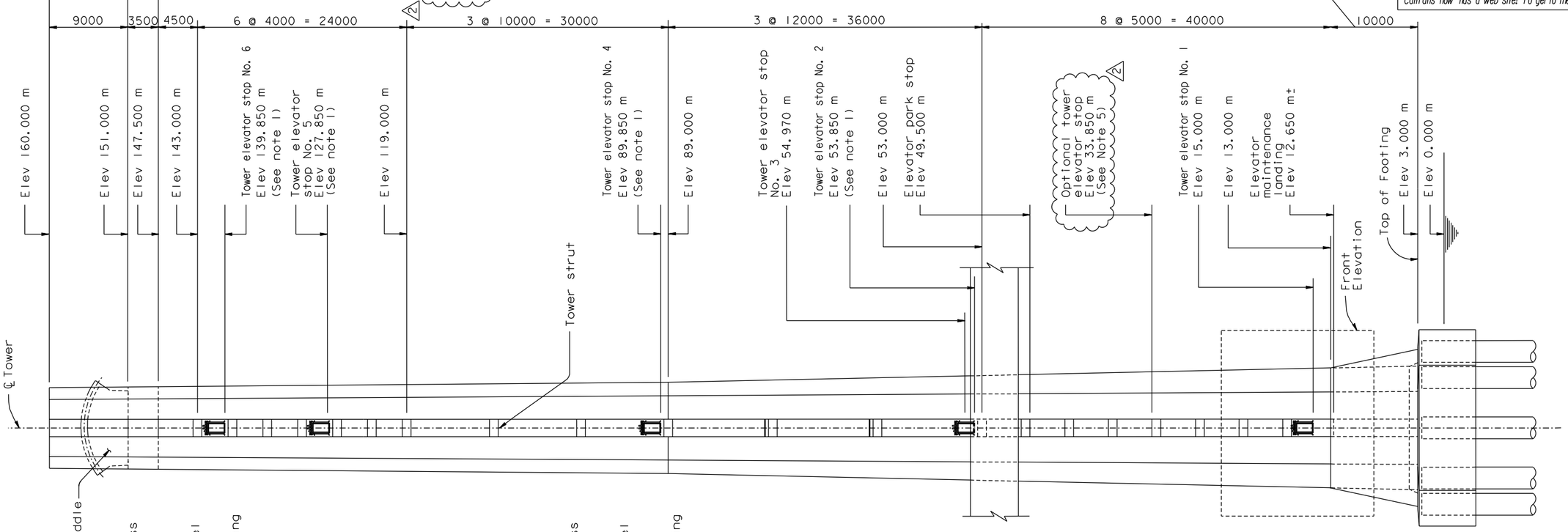

LONGITUDINAL ELEVATION LOOKING-NORTH
1:250

Note:
1. For Front Elevation see "Elevator Detail No. 1" sheet.

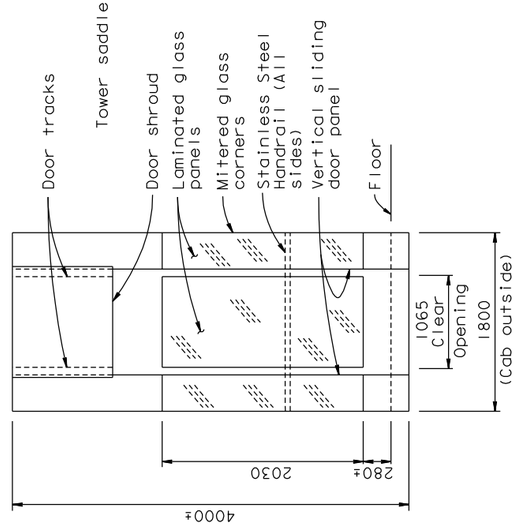

CAB FRONT ELEVATION
1:30

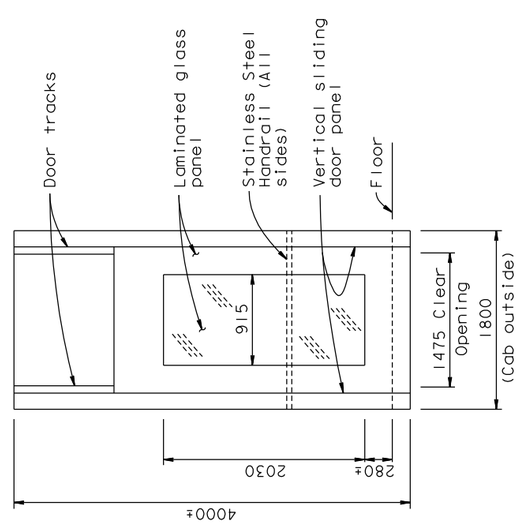

CAB REAR ELEVATION
1:30

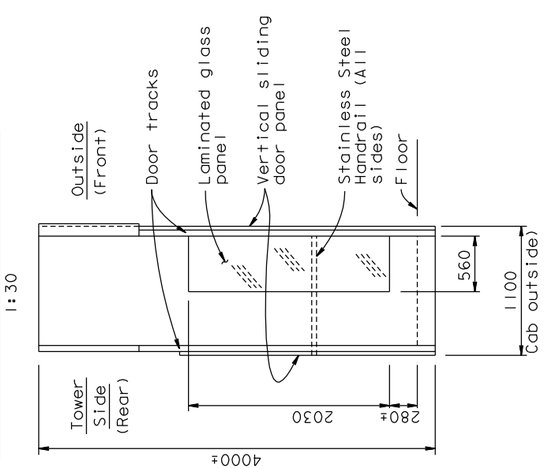

CAB SIDE ELEVATION
(Typical both sides)
1:30

ELEVATOR DETAIL NO. 2

SCALE: 1:250

ALL DIMENSION ARE IN MILLIMETERS UNLESS OTHERWISE SHOWN

M-34

SAS STRUCTURE
STATE OF CALIFORNIA - DEPARTMENT OF TRANSPORTATION
Caltrans
May 12, 2009

DESIGN OVERSIGHT	CALCULATED/ DESIGNED BY	ES	DATE 5/3/02	REVISED BY	JNB
Bob Zandipour	CHECKED BY	RB	5/3/02	DATE REVISED	4/21/09

LAST REVISION 00-00-00
DATE PLOTTED => 10 DEC 2010
TIME PLOTTED => 09:47:58

FOR REDUCED PLANS ORIGINAL SCALE IS IN MILLIMETERS 0 20 40 60 80

FILE => I:\bb\04-012001\sas\contract plans and cco\cco\cco#174\1-original 12-10-10\dgn\40120fub034.dgn
USERNAME => DWinrow

CU 04251 EA 0120F1

DIST.	COUNTY	ROUTE	KILOMETER POST TOTAL PROJECT	SHEET NO.	TOTAL SHEETS
04	SF	80	13.2/13.9	531R1	1204

Caltrans Metric

REGISTERED ENGINEER - CIVIL

12-6-04
PLANS APPROVAL DATE

REGISTERED PROFESSIONAL ENGINEER Marwan N. Nader No. C 054426 Exp. 12/31/11 CIVIL STATE OF CALIFORNIA

The State of California or its officers or agents shall not be responsible for the accuracy or completeness of electronic copies of this plan sheet.

T.Y. LIN / MOFFATT & NICHOL
825 BATTERY STREET
SAN FRANCISCO, CA 94111

Caltrans now has a web site! To get to the web site, go to: http://www.dot.ca.gov

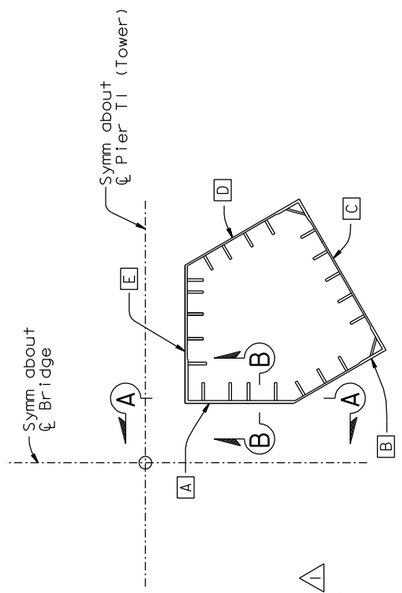

KEY PLAN

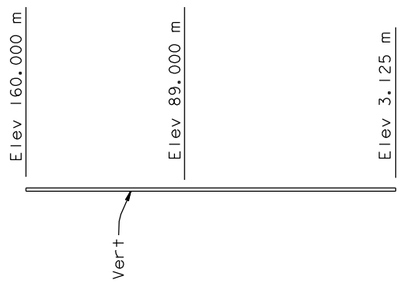

SECTION B-B
(Profile of Skin Plate "A")
(Longitudinal stiffener plates not shown for clarity)
Horiz=1:120
Vert =1:1200

Table 1

STIFFENER DESIGNATION	CUTOFF ELEVATION (m)
A1	144.000
A2	144.000
A3	144.000
A4	144.000

Table 2

ELEVATION (m)	SKIN PL THICKNESS (mm)
3.125-30.000	70
30.000-144.000	90

Table 3

ELEVATION (m)	TYPICAL STIFFENER SIZE (mm x mm)	STIFFENER A1 SIZE (mm x mm)
3.125-47.000	65x450	65x450
47.000-121.000	75x520	75x375
121.000-144.000	65x450	65x250

(See Note 7)

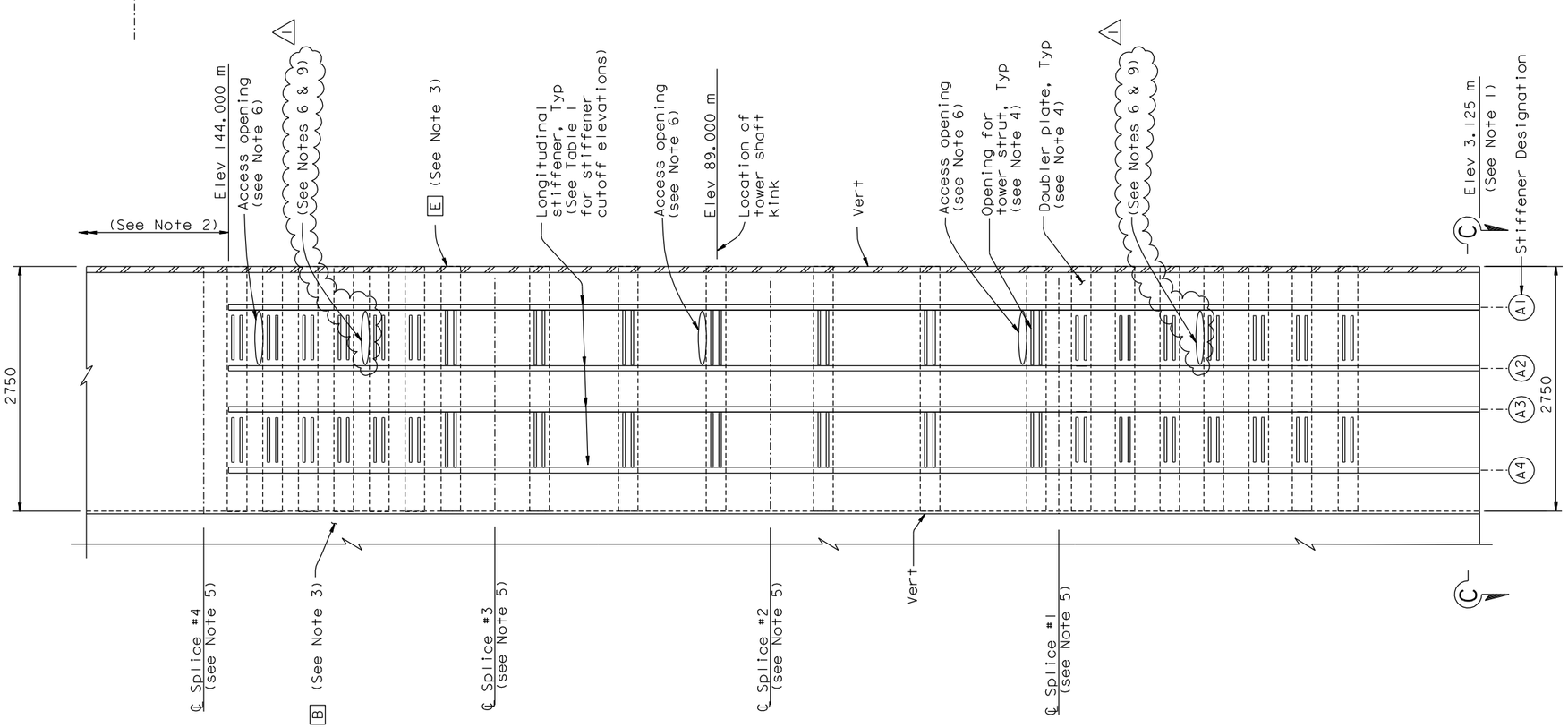

SECTION A-A
(Elevation of Skin Plate "A")
Horiz=1:30
Vert =1:300

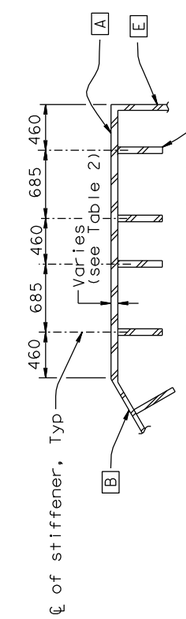

SECTION C-C
(Partial plan of Skin Plate "A")
1:30
(See Note 8)

NOTES:

1. For tower anchorage details (not shown for clarity), see "Tower Anchorage Details" sheets.
2. For tower saddle grillage and tower head details (not shown for clarity), see "Tower Saddle Grillage Details" and "Tower Head Details" sheets.
3. Longitudinal stiffeners on tower skin PL B & E not shown for clarity.
4. For tower strut and doubler plate opening, see "Tower Shaft Details No.10" sheet.
5. For tower shaft splice details, see "Tower Splice Details" sheets.
6. For access openings details, see "Tower Access Details" sheets.
7. For longitudinal stiffener transition at tower splices, see sheets "Tower Splice Details No.7", "Tower Splice Details No.11", "Tower Splice Details No.12", and "Tower Splice Details No.19".
8. Anchorage bearing stiffener plates are not shown for clarity. For details see "Tower Anchorage Details" sheets.
9. At the Contractor's option, additional access openings may be provided at locations shown.

100 % PS&E

CONTRACT CHANGE ORDER NO. ____
SHEET ___ OF ___

REQUESTS FOR INFORMATION NOT ADDRESSED IN THIS CCO REMAIN IN FORCE

ALL DIMENSIONS ARE IN MILLIMETERS UNLESS OTHERWISE SHOWN

R. Valizadeh/V. Toan/Y.L./W.L./F.C.
DESIGN OVERSIGHT
Y. Liu
SIGN OFF DATE 12/10/10

MARK	DATE	DESCRIPTIONS	BY	CH'D	CCO#
1	12/10/10	MISCELLANEOUS ELEVATOR DETAILS	TH	MN	174

REVISIONS

	BY	CHECKED
DESIGN	M. Nader	M. Gulyas
DETAILS	L. Rus	M. Gulyas
QUANTITIES	L. Rus	Y. Zhang

PREPARED FOR THE STATE OF CALIFORNIA DEPARTMENT OF TRANSPORTATION

R. Manzanarez
PROJECT ENGINEER

BRIDGE NO. 34-0006L/R
KILOMETER POST 13.2/13.9

SAN FRANCISCO OAKLAND BAY BRIDGE
EAST SPAN SEISMIC SAFETY PROJECT
SELF-ANCHORED SUSPENSION BRIDGE
(SUPERSTRUCTURE & TOWER)

TOWER SHAFT DETAILS NO. 3

Rev. Date: 5-18-98

ORIGINAL SCALE IN MILLIMETERS FOR REDUCED PLANS 0 10 20 30 40 50 60 70 80 90 100

CU 04
EA 0120F1

DISREGARD PRINTS BEARING EARLIER REVISION DATES

REVISION DATES (PRELIMINARY STAGE ONLY) 05/15/99 08/02/99 05/31/01 04/08/02 07/01/02 12/18/02 11/13/05

SHEET 114R1 OF

FILE => I:\bb\04-012001\sas\contract plans and cco\cco\cco#174\1-original 12-10-10\dgn\aet1d03.dgn

USERNAME => DWinrow DATE PLOTTED => 10 DEC 2010 TIME PLOTTED => 09:48:22

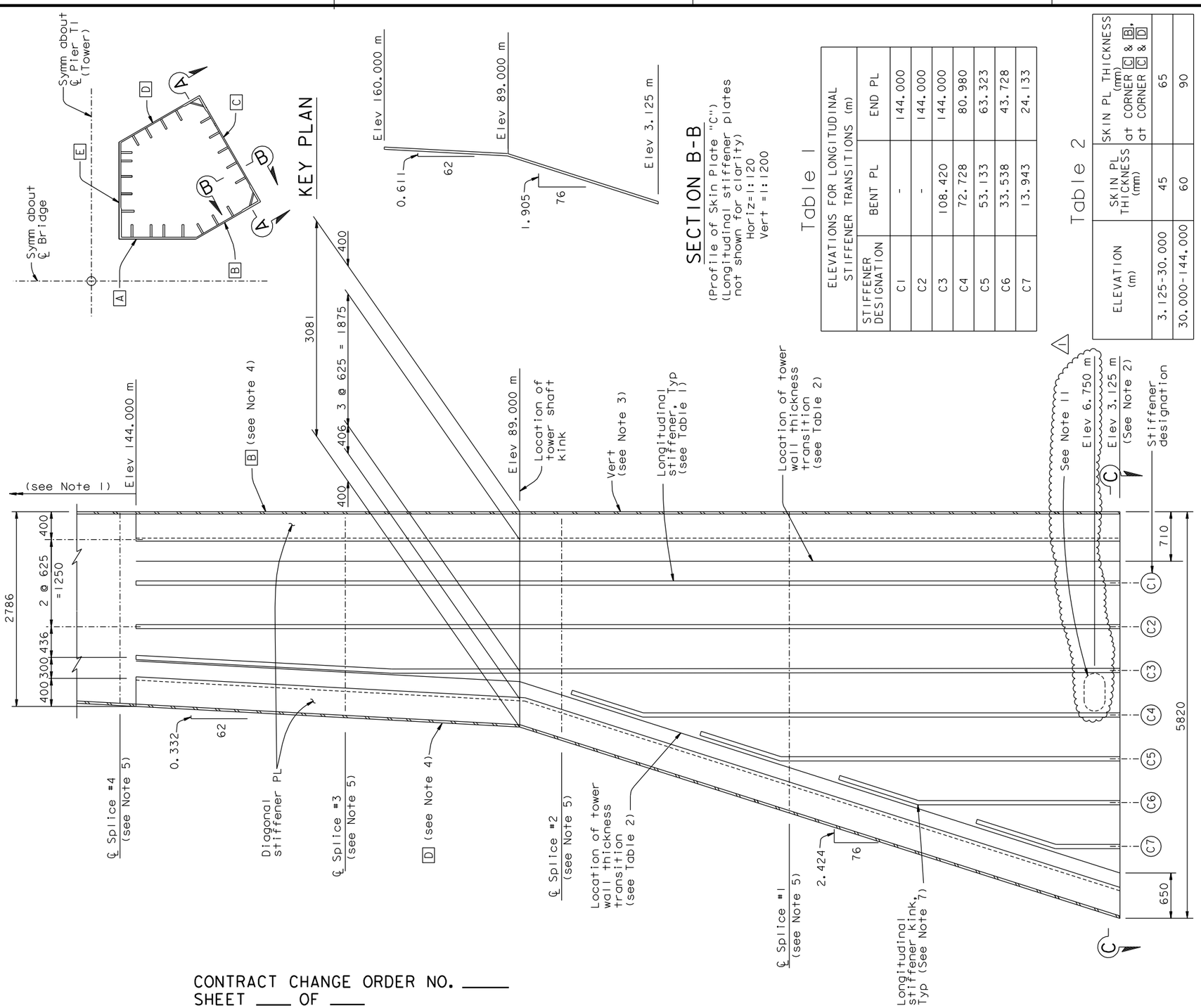

Table 1

ELEVATIONS FOR LONGITUDINAL STIFFENER TRANSITIONS (m)		
STIFFENER DESIGNATION	BENT PL	END PL
C1	-	144.000
C2	-	144.000
C3	108.420	144.000
C4	72.728	80.980
C5	53.133	63.323
C6	33.538	43.728
C7	13.943	24.133

Table 2

ELEVATION (m)	SKIN PL THICKNESS (mm)	SKIN PL THICKNESS (mm) at CORNER C & B, at CORNER C & D
3.125-30.000	45	65
30.000-144.000	60	90

Table 3

ELEVATION (m)	STIFFENER SIZE (mm x mm)
3.125-47.000	60x400
47.000-121.000	70x460
121.000-144.000	60x400

(See Note 8)

NOTES:

1. For tower saddle grillage and tower head details (not shown for clarity), see "Tower Saddle Grillage Details" and "Tower Head Details" sheets.
2. For tower anchorage details (not shown for clarity), see "Tower Anchorage Details" sheets.
3. The referenced edge of this plane is vertical in elevation only. This edge is not orthogonal to a horizontal plane.
4. Longitudinal stiffeners on tower skin PL B & D not shown for clarity.
5. For tower shaft splice details, see "Tower Splice Details" sheets.
6. For details of diagonal stiffener to tower skin plate connection, see Detail A on "Tower Splice Details No.2" sheet.
7. For longitudinal stiffener taper and kink details, see "Tower Splice Details No.2" sheet.
8. For longitudinal stiffener transition at tower splice, see "Tower Splice Details No.7", "Tower Splice Details No.12", "Tower Splice Details No.17" and "Tower Splice Details No.19" sheets.
9. Anchorage bearing stiffener plates are not shown for clarity. For details see "Tower Anchorage Details" sheets.
10. For longitudinal stiffener kink at elevation 89.000 m see "Tower Diaphragm Details No.10" sheet.
11. At the Contractor's option, temporary access opening may be provided at location shown. The opening shall be closed with fill plate which shall be identical to the skin plate. The fill plate shall be CJP welded all around.

100 % PS&E

CONTRACT CHANGE ORDER NO. ____
SHEET ____ OF ____

REQUESTS FOR INFORMATION NOT ADDRESSED IN THIS CCO REMAIN IN FORCE

ALL DIMENSIONS ARE IN MILLIMETERS UNLESS OTHERWISE SHOWN

DIST.	COUNTY	ROUTE	KILOMETER POST TOTAL PROJECT	SHEET NO.	TOTAL SHEETS
04	SF	80	13.2/13.9	533R1	1204

Caltrans Metric

REGISTERED ENGINEER - CIVIL
12-6-04
PLANS APPROVAL DATE

REGISTERED PROFESSIONAL ENGINEER Marwan N. Nader No. C 054426 Exp. 12/31/11 CIVIL STATE OF CALIFORNIA

The State of California or its officers or agents shall not be responsible for the accuracy or completeness of electronic copies of this plan sheet.

T.Y. LIN / MOFFATT & NICHOL
825 BATTERY STREET
SAN FRANCISCO, CA 94111

Caltrans now has a web site! To get to the web site, go to: http://www.dot.ca.gov

R. Valizadeh/V. Toan/Y.L./W.L./F.C.
DESIGN OVERSIGHT
Ryan Valizadeh / Vong Toan / Y. Liu
SIGN OFF DATE 12/10/10

MARK	DATE	DESCRIPTIONS	BY	CH'D	CCO#
1	12/10/10	MISCELLANEOUS ELEVATOR DETAILS	TH	MN	174

REVISIONS

DESIGN	BY M. Nader	CHECKED M. Gulyas	
DETAILS	BY L. Rus	CHECKED M. Gulyas	
QUANTITIES	BY L. Rus	CHECKED Y. Zhang	

PREPARED FOR THE STATE OF CALIFORNIA DEPARTMENT OF TRANSPORTATION

R. Manzanarez
PROJECT ENGINEER

BRIDGE NO. 34-0006L/R
KILOMETER POST 13.2/13.9

SAN FRANCISCO OAKLAND BAY BRIDGE
EAST SPAN SEISMIC SAFETY PROJECT
SELF-ANCHORED SUSPENSION BRIDGE
(SUPERSTRUCTURE & TOWER)

TOWER SHAFT DETAILS NO.5

Rev. Date: 5-18-98

ORIGINAL SCALE IN MILLIMETERS FOR REDUCED PLANS 0 10 20 30 40 50 60 70 80 90 100

CU 04
EA 0120F1

DISREGARD PRINTS BEARING EARLIER REVISION DATES

REVISION DATES (PRELIMINARY STAGE ONLY) 05/15/99 08/02/99 05/31/01 04/08/02 07/09/02 12/19/02

SHEET 116R1 OF

FILE => I:\bb\04-012001\sas\contract plans and cco\cco\cco#174\1-original 12-10-10\dgn\det1d05.dgn

USERNAME => DWinrow DATE PLOTTED => 10 DEC 2010 TIME PLOTTED => 09:48:45

DIST.	COUNTY	ROUTE	KILOMETER POST TOTAL PROJECT	SHEET NO.	TOTAL SHEETS
04	SF	80	13.2/13.9	536R1	1204

REGISTERED ENGINEER - CIVIL

12-6-04
PLANS APPROVAL DATE

The State of California or its officers or agents shall not be responsible for the accuracy or completeness of electronic copies of this plan sheet.

REGISTERED PROFESSIONAL ENGINEER Marwan N. Nader No. C 054426 Exp. 12/31/11 CIVIL STATE OF CALIFORNIA

T.Y. LIN / MOFFATT & NICHOL
825 BATTERY STREET
SAN FRANCISCO, CA 94111

Caltrans now has a web site! To get to the web site, go to: http://www.dot.ca.gov

NOTES:

1. For Details D, E, F, G, H, I and J, see "Tower Shaft Details No.9" sheet.
2. Longitudinal stiffeners of adjacent skin plates are not shown for clarity.
3. For tower diaphragm at Elev 9.000 m and 13 m, see "Tower Diaphragm Details No.11" sheet.
4. For diaphragm to shear plate connection details, see "Tower Diaphragm Details No.13" sheet.
5. For tower anchorage details, see "Tower Anchorage Details" sheets.
6. For access openings details, see "Tower Access Details" sheets.
7. For elevation of diaphragm at 13 m, see "Tower Drainage Detail No.3" sheet.
8. Access openings in tower base shear plate [c] shall be on East side of tower only.
9. At the Contractor's option, temporary access openings may be provided at locations shown in shear plates [a1] only. The openings shall be closed with fill plates which shall be identical to the respective shear plate. The fill plates shall be CJP welded all around. △1

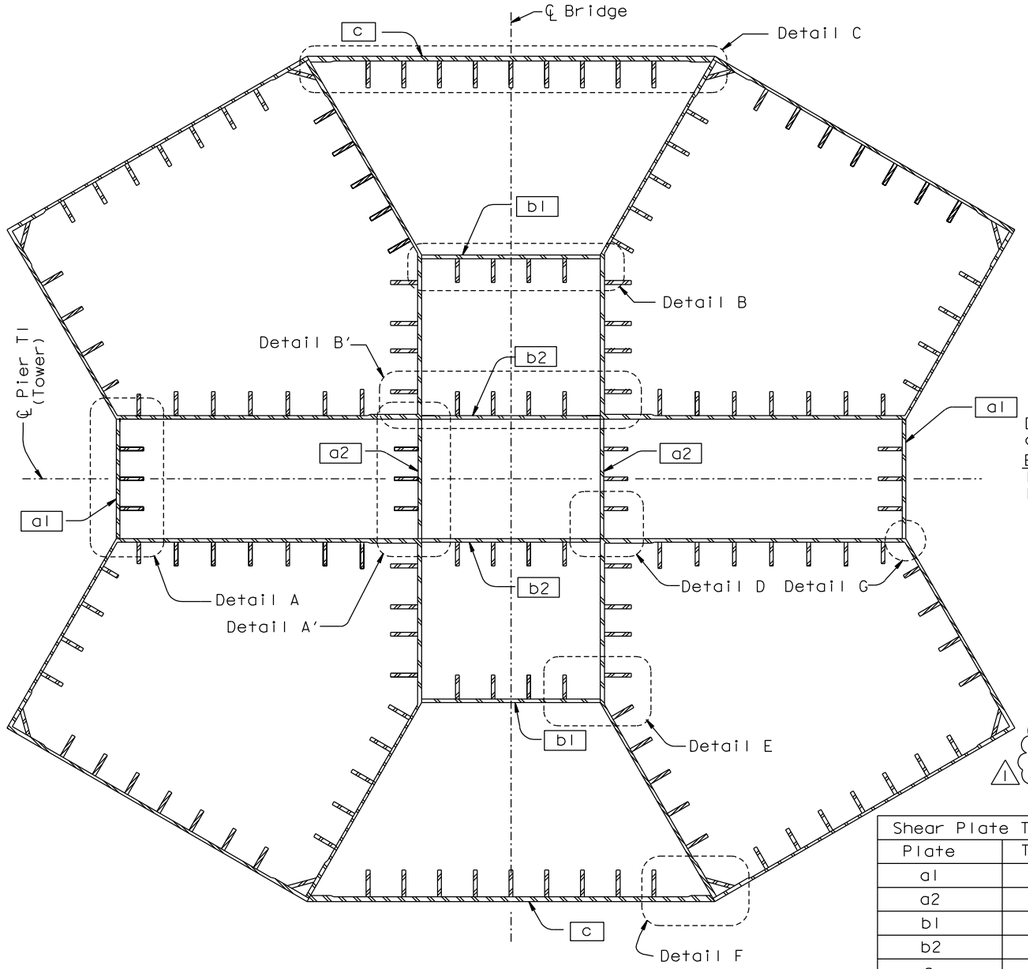

TYPICAL TOWER BASE CROSS SECTION

(Between Elev 3.125 m and Elev 13.000 m)
1:50

Shear Plate Thickness	
Plate	Thickness
a1	60 mm
a2	60 mm
b1	60 mm
b2	60 mm
c	80 mm
c at corner	100 mm

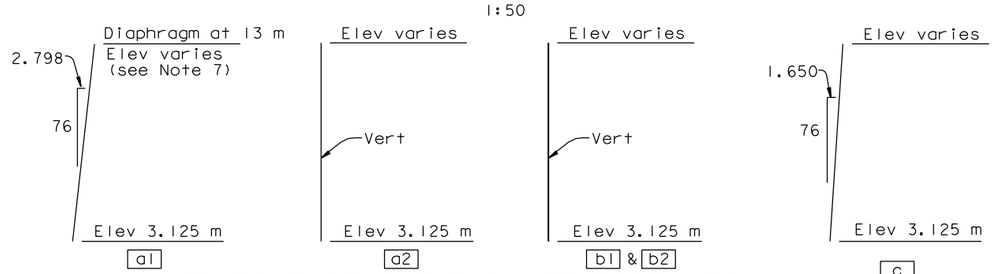

TOWER BASE SHEAR PLATE PROFILES

(Longitudinal stiffeners are not shown for clarity)
NTS

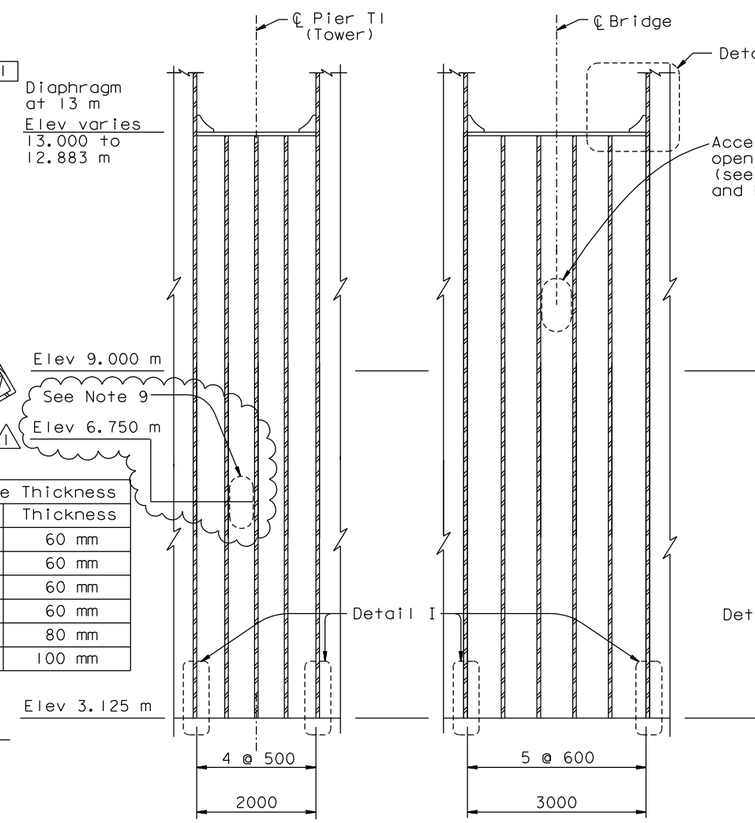

SECTION A-A

1:50

SECTION B-B

1:50

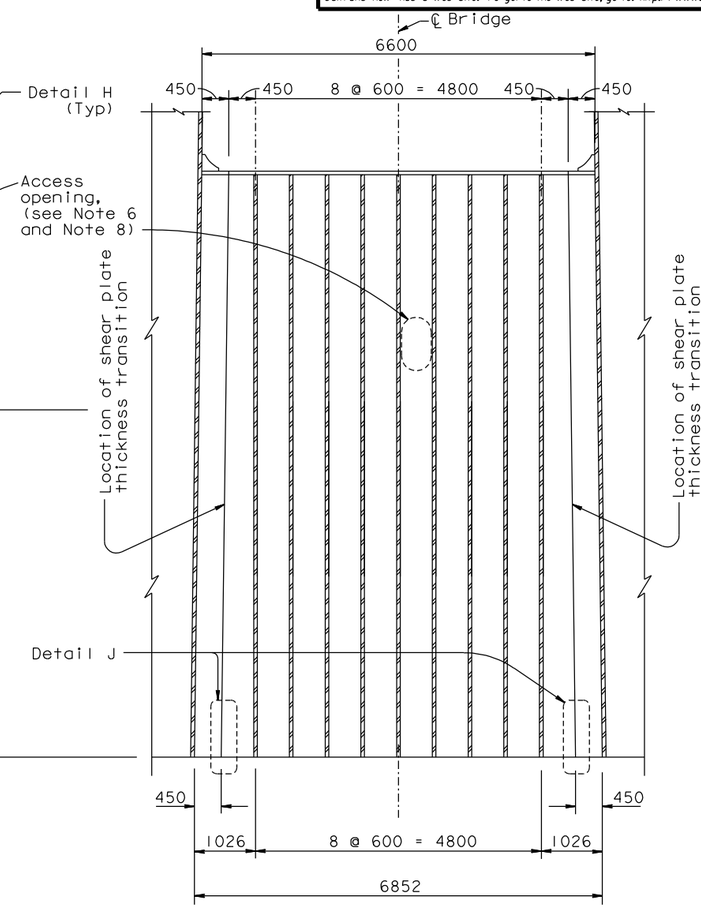

SECTION C-C

1:50

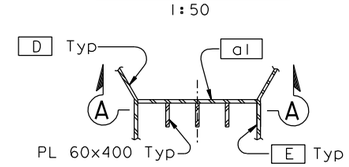

DETAIL A (Detail A' similar)

1:50

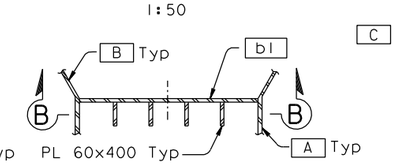

DETAIL B (Detail B' similar)

1:50

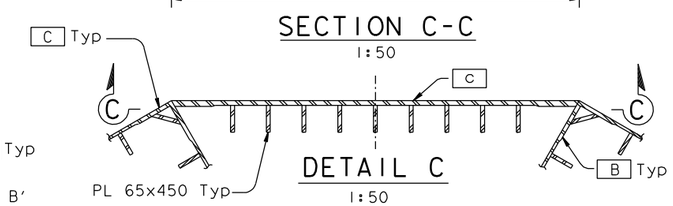

DETAIL C

1:50

ALL DIMENSIONS ARE IN MILLIMETERS UNLESS OTHERWISE SHOWN

CONTRACT CHANGE ORDER NO. _____
SHEET ____ OF ____

REQUESTS FOR INFORMATION NOT ADDRESSED IN THIS CCO REMAIN IN FORCE

R. Valizadeh/V. Toan/Y.L./W.L./F.C.
DESIGN OVERSIGHT
SIGN OFF DATE 12/10/10

MARK	DATE	DESCRIPTIONS	BY	CH'D	CCO#
1	12/10/10	MISCELLANEOUS ELEVATOR DETAILS	TH	MN	174

REVISIONS

	BY	CHECKED
DESIGN	M. Nader	M. Gulyas
DETAILS	L. Rus	M. Gulyas
QUANTITIES	L. Rus	Y. Zhang

PREPARED FOR THE STATE OF CALIFORNIA DEPARTMENT OF TRANSPORTATION

R. Manzanarez
PROJECT ENGINEER

BRIDGE NO. 34-0006L/R
KILOMETER POST 13.2/13.9

SAN FRANCISCO OAKLAND BAY BRIDGE
EAST SPAN SEISMIC SAFETY PROJECT
SELF-ANCHORED SUSPENSION BRIDGE
(SUPERSTRUCTURE & TOWER)

TOWER SHAFT DETAILS NO. 8

Rev. Date: 5-18-98

ORIGINAL SCALE IN MILLIMETERS FOR REDUCED PLANS 0 10 20 30 40 50 60 70 80 90 100

CU 04
EA 0120F1

DISREGARD PRINTS BEARING EARLIER REVISION DATES

REVISION DATES (PRELIMINARY STAGE ONLY): 05/15/99 08/02/99 05/31/01 04/08/02 07/18/02 12/18/02 11/13/05

SHEET 119R1 OF

FILE => I:\bb\04-012001\sas\contract plans and cco\cco\cco#174\1-original 12-10-10\dgn\aet1d08.dgn

100 % PS&E

USERNAME => DWinrow DATE PLOTTED => 10 DEC 2010 TIME PLOTTED => 09:49:15

DIST.	COUNTY	ROUTE	KILOMETER POST TOTAL PROJECT	SHEET NO.	TOTAL SHEETS
04	SF	80	13.2/13.9	917R5	1204

REGISTERED ENGINEER - CIVIL

12-6-04
PLANS APPROVAL DATE

REGISTERED PROFESSIONAL ENGINEER Marwan N. Nader No. C 054426 Exp. 12/31/11 CIVIL STATE OF CALIFORNIA

The State of California or its officers or agents shall not be responsible for the accuracy or completeness of electronic copies of this plan sheet.

T.Y. LIN / MOFFATT & NICHOL
825 BATTERY STREET
SAN FRANCISCO, CA 94111

Caltrans now has a web site! To get to the web site, go to: http://www.dot.ca.gov

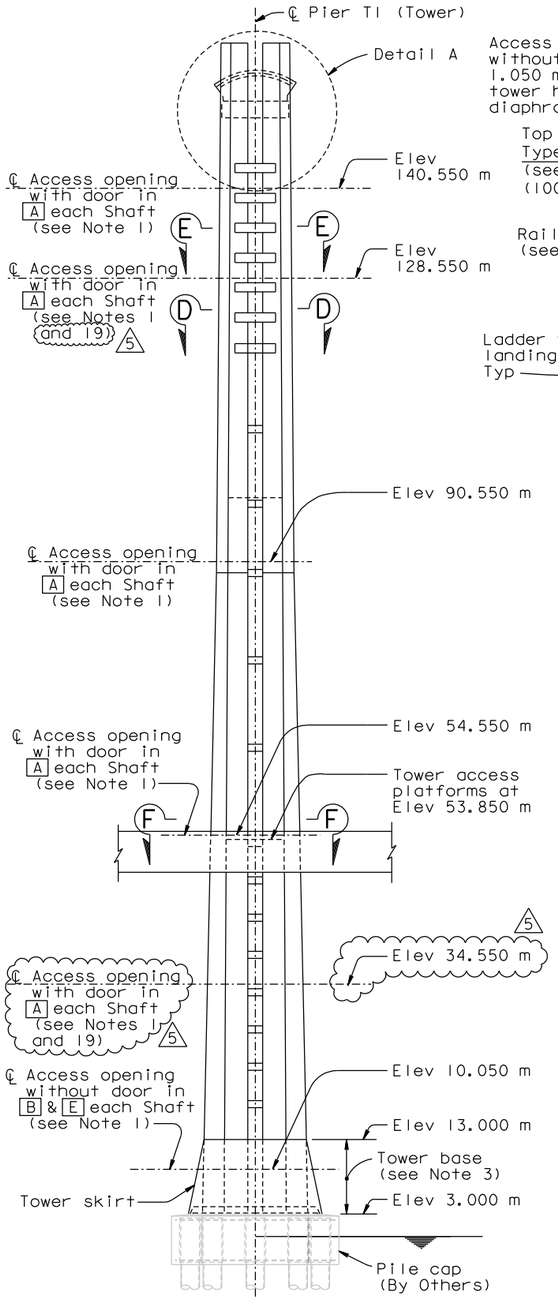

ELEVATION
1:400
(Looking North)

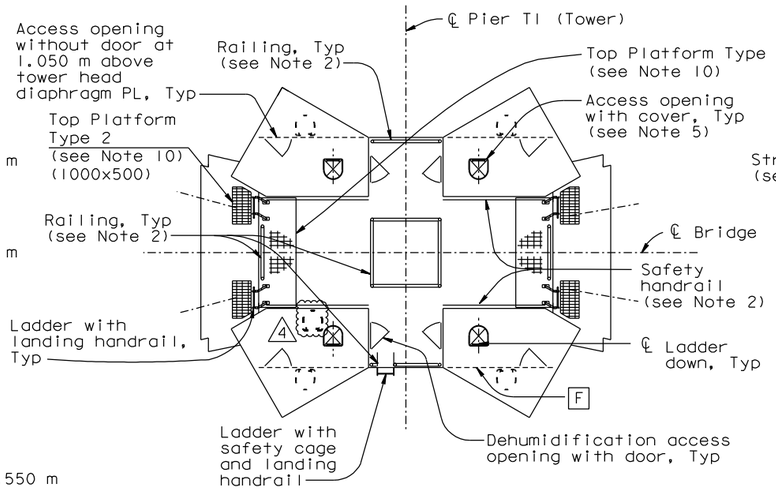

VIEW B-B (See Notes 7 & 18)
1:80

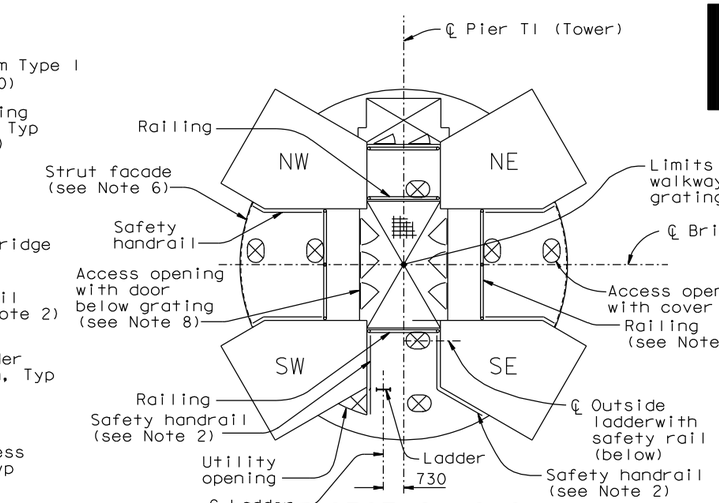

SECTION C-C
1:80

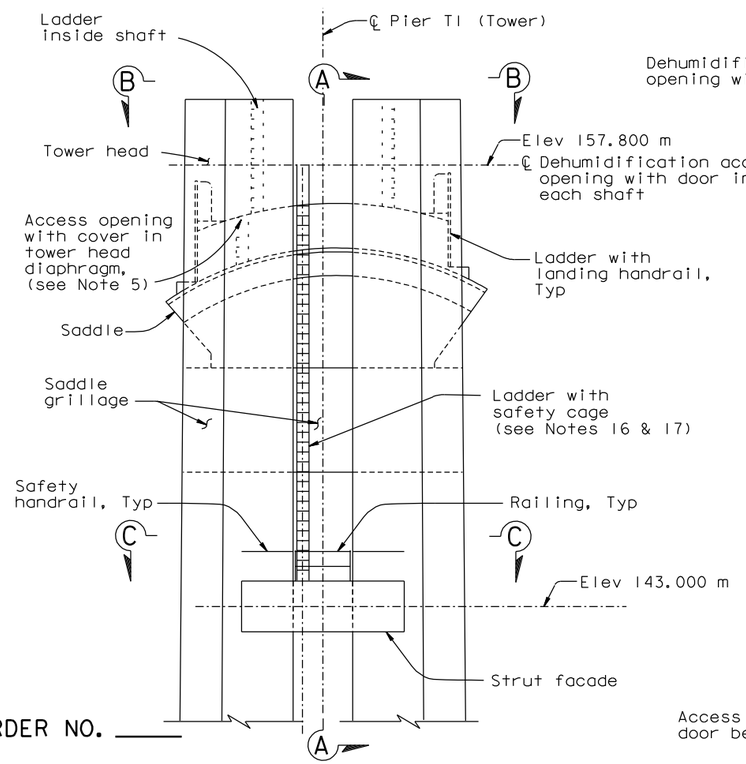

DETAIL A
1:100

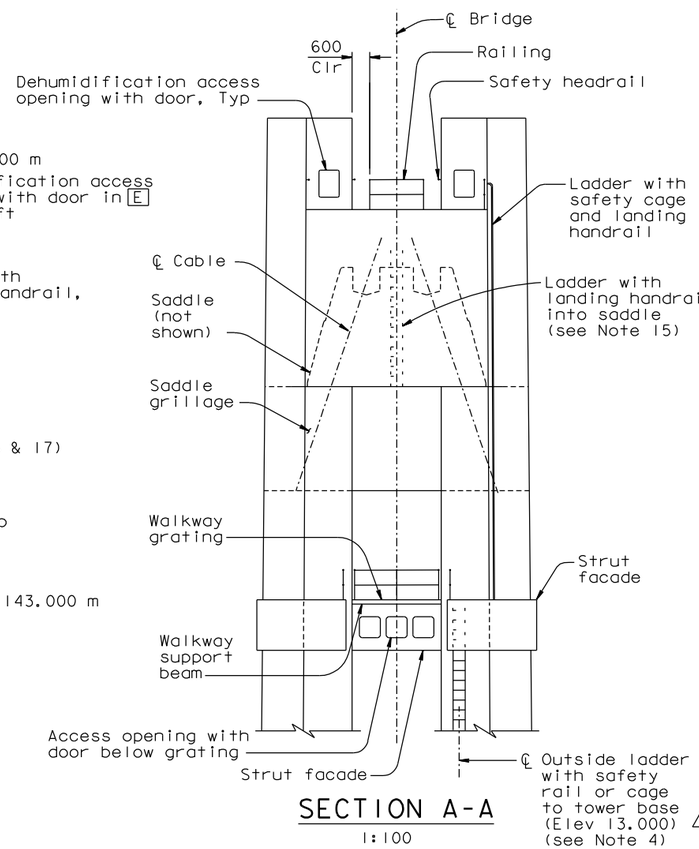

SECTION A-A
1:100

ALL DIMENSIONS ARE IN MILLIMETERS UNLESS OTHERWISE SHOWN

LEGEND:

▽ Access opening (see Notes 1, 3, 8 & 14)

[A] Tower shaft skin plate A

NOTES:

1. For location of access openings in tower shafts, see "Tower Shaft Details" sheets.
2. For railing and safety handrail details, see "Tower Access Details No. 8" sheet.
3. For additional access details in tower base, see "Tower Access Details No. 2" sheet.
4. For ladder details not shown, see "Tower Access Details No. 7" sheet.
5. For access opening details, see Detail E on "Tower Access Details No. 8" sheet. For cover details, see "Tower Access Details No. 9" sheet.
6. For strut facade, see "Tower Strut Facade Details" sheets.
7. For location of access openings in tower head, see "Tower Head Details" sheets.
8. For access opening and door details, see "Tower Access Detail No. 4" sheet. Access openings are without door unless noted otherwise.
9. For Section D-D and E-E, see "Tower Access Details No. 3" sheet.
10. For Top Platform Types 1 and 2, see "Tower Access Detail No. 9" sheet.
11. For Section F-F, see "Tower Access Details No. 10" sheet.
12. For walkway grating and support beam, see "Tower Access Details No. 3" sheet.
13. For access opening cover details, see "Tower Access Details No. 9" sheet.
14. For location of access openings in strut facade, see "Tower Strut Facade Details" sheets.
15. For location of saddle access opening and ladder, see "Tower Saddle Housing Details" sheets.
16. At locations where ladder lengths exceed 6.5 meters, contraction joints shall be provided. Ladder length is defined as the distance between the centerlines of the top and bottom end supports. Contraction joints shall be located below ladder supports unless noted otherwise. For contraction joint details, see "Tower Access Details No. 7" sheet.
17. Ladder supports shall be spaced at 6 meters maximum.
18. For ladder, railing and safety handrail, and top platform details not shown, see "Tower Access Details No. 1A" sheet.
19. 5 At the Contractor's option, additional access openings may be provided at these elevations.

CONTRACT CHANGE ORDER NO. ____
SHEET ____ OF ____

REQUESTS FOR INFORMATION NOT ADDRESSED IN THIS CCO REMAIN IN FORCE

MARK	DATE	DESCRIPTIONS	BY	CH'D	CCO#
5	12/10/10	MISCELLANEOUS ELEVATOR DETAILS	NV	MN	174
4	10/29/10	DOORS AND LADDER CAGES	NV	MN	118
3	10/22/10	TOWER HEAD DETAILS	NV	MN	93
2	07/17/09	ELEVATOR DETAILS	TH	MN	85
1	07/18/08	TOWER ACCESS	NV	MN	65

REVISIONS

R. Valizadeh/V. Toan/Y.L./W.L./F.C.
DESIGN OVERSIGHT
SIGN OFF DATE 12/10/10

	BY	CHECKED
DESIGN	M. Nader	M. Gulyas
DETAILS	G. Baker	L. Rus
QUANTITIES	D. Turner	J. Leventini

PREPARED FOR THE STATE OF CALIFORNIA DEPARTMENT OF TRANSPORTATION

R. Manzanarez
PROJECT ENGINEER

BRIDGE NO. 34-0006L/R
KILOMETER POST 13.2/13.9

SAN FRANCISCO OAKLAND BAY BRIDGE
EAST SPAN SEISMIC SAFETY PROJECT
SELF-ANCHORED SUSPENSION BRIDGE
(SUPERSTRUCTURE & TOWER)

TOWER ACCESS DETAILS NO. 1

Rev. Date: 5-18-98

ORIGINAL SCALE IN MILLIMETERS FOR REDUCED PLANS 0 10 20 30 40 50 60 70 80 90 100

CU 04
EA 0120F1

DISREGARD PRINTS BEARING EARLIER REVISION DATES

REVISION DATES (PRELIMINARY STAGE ONLY): 05/15/99 08/02/99 05/31/01 04/08/02 07/01/02 12/18/02 10/12/04

SHEET 500R5 OF

FILE => I:\bb\04-012001\sas\contract plans and cco\cco\cco#174\1-original 12-10-10\dgn\akacc06.dgn

USERNAME => DWinrow DATE PLOTTED => 10 DEC 2010 TIME PLOTTED => 09:49:37

100 % PS&E

DIST.	COUNTY	ROUTE	KILOMETER POST TOTAL PROJECT	SHEET NO.	TOTAL SHEETS
04	SF	80	13.2/13.9	938S3	1204

REGISTERED ENGINEER - CIVIL

03-25-11

PLANS APPROVAL DATE

REGISTERED PROFESSIONAL ENGINEER Tien Hung Ho No. C 43990 Exp. 06/30/11 CIVIL STATE OF CALIFORNIA

The State of California or its officers or agents shall not be responsible for the accuracy or completeness of electronic copies of this plan sheet.

T.Y. LIN / MOFFATT & NICHOL
825 BATTERY STREET
SAN FRANCISCO, CA 94111

Caltrans now has a web site! To get to the web site, go to: http://www.dot.ca.gov

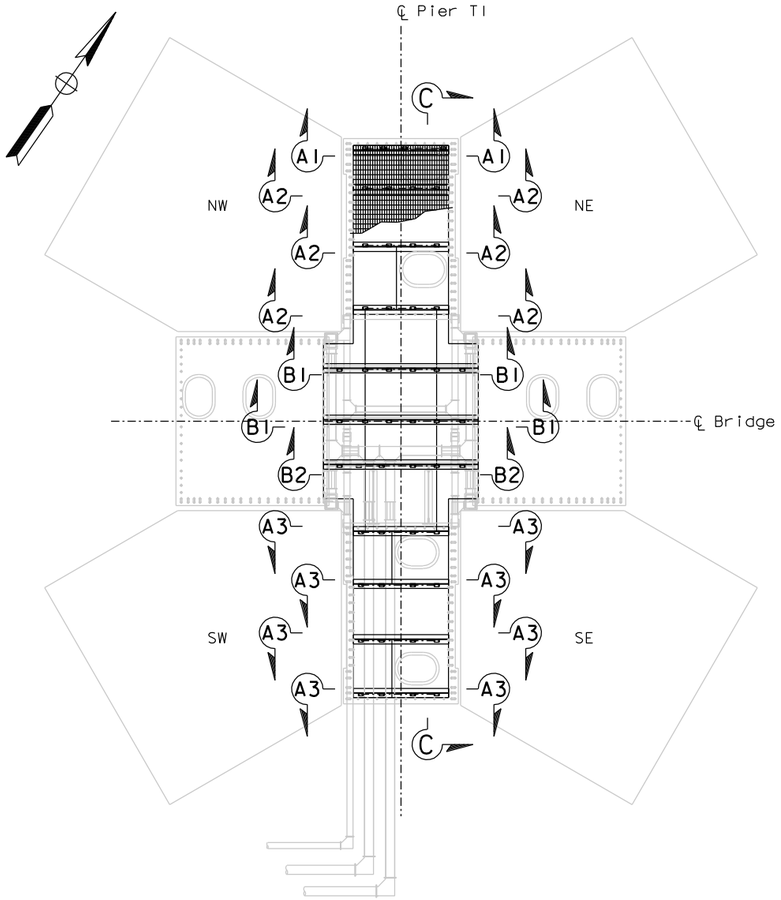

GRATING SUPPORT KEY PLAN ABOVE EL 53.85 (See Note 3)

1:50

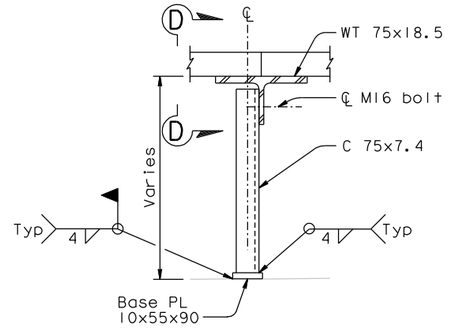

DETAIL A

1:5

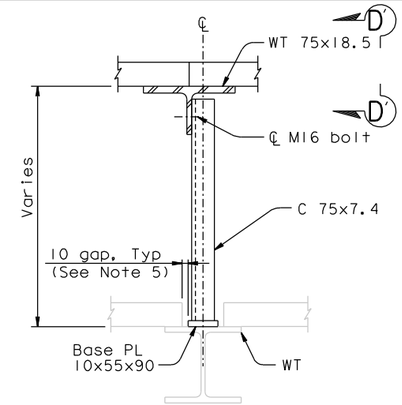

DETAIL B

1:5

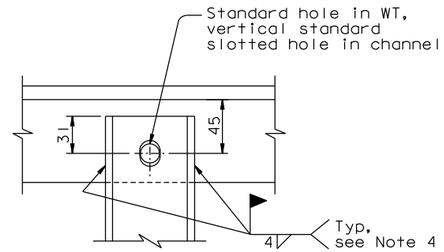

SECTION D-D (D'-D' SIMILAR)

1:2.5

	a	b	c	d
A1	650	60	300	300
A2	400	200	200	400
A3	400	200	325	350

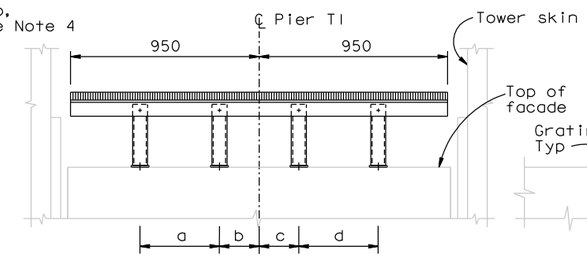

SECTION A-A

1:15

	e	f	g	h	j	k
B1	430	400	200	200	400	430
B2	320	385	325	200	400	430

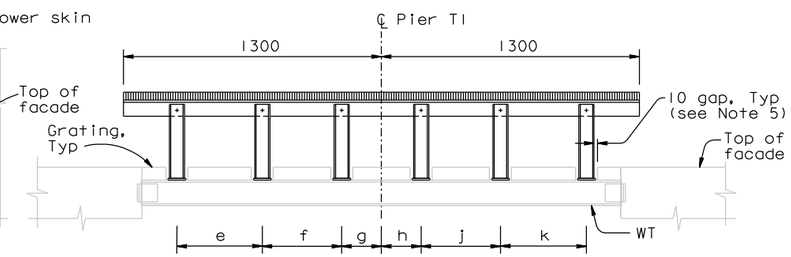

SECTION B-B

1:15

NOTES:

1. The Contractor shall provide fiberglass grating with fasteners. The grating shall be rated to support 5 kN/m2 loading with deflection not greater than 1 mm.
2. The top of the grating shall be level.
3. For Removable Gratings Plan, see "Tower Access Details No.26" and "Tower Access Details No.27" sheets.
4. Welding of channel to WT shall be performed after top of WT is level.
5. Cut grating to provide clearance for grating support posts.

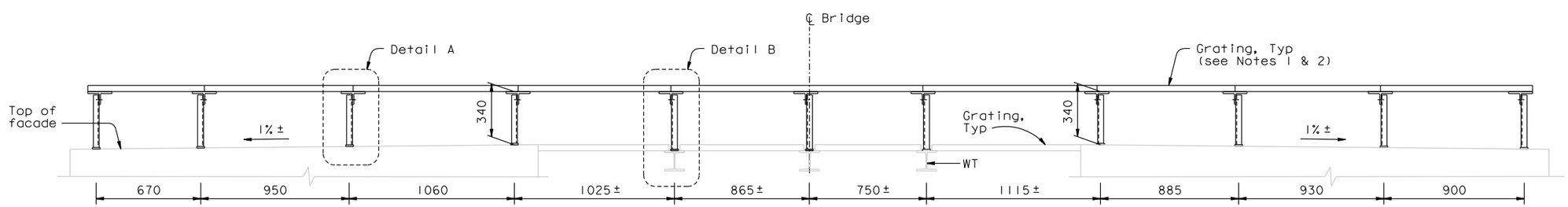

SECTION C-C

1:15

CONTRACT CHANGE ORDER NO. _____
SHEET ____ OF ____

REQUESTS FOR INFORMATION NOT ADDRESSED IN THIS CCO REMAIN IN FORCE

ALL DIMENSIONS ARE IN MILLIMETERS UNLESS OTHERWISE SHOWN

R. Valizadeh/V. Toan/Y.L./W.L./F.C.
DESIGN OVERSIGHT
SIGN OFF DATE 03/29/11

MARK	DATE	DESCRIPTIONS	BY	CH'D	CCO#
0	03/25/11	MISCELLANEOUS ELEVATOR DETAILS	TH	NV	174

REVISIONS

DESIGN	BY T. Ho	CHECKED N. Vo	
DETAILS	BY C. Neff	CHECKED A. Baumberger	
QUANTITIES	BY C. Neff	CHECKED A. Baumberger	

PREPARED FOR THE STATE OF CALIFORNIA DEPARTMENT OF TRANSPORTATION

R. Manzanarez
PROJECT ENGINEER

BRIDGE NO. 34-0006L/R
KILOMETER POST 13.2/13.9

SAN FRANCISCO OAKLAND BAY BRIDGE
EAST SPAN SEISMIC SAFETY PROJECT
SELF-ANCHORED SUSPENSION BRIDGE
(SUPERSTRUCTURE & TOWER)

TOWER ACCESS DETAILS NO. 25

Rev. Date: 5-18-98

ORIGINAL SCALE IN MILLIMETERS FOR REDUCED PLANS 0 10 20 30 40 50 60 70 80 90 100

CU 04
EA 0120F1

DISREGARD PRINTS BEARING EARLIER REVISION DATES

REVISION DATES (PRELIMINARY STAGE ONLY) 03/25/11

SHEET 521S3 OF

FILE => I:\bb\04-012001\sas\contract plans and cco\cco\cco#174\2-revision 03-25-11\dgn\akacc22c.dgn

100% PS&E

DATE PLOTTED => 25 MAR 2011 TIME PLOTTED => 12:09:00

USERNAME => PTom

DIST.	COUNTY	ROUTE	KILOMETER POST TOTAL PROJECT	SHEET NO.	TOTAL SHEETS
04	SF	80	13.2/13.9	938S4	1204

REGISTERED ENGINEER - CIVIL

03-25-11
PLANS APPROVAL DATE

PROFESSIONAL ENGINEER — Tien Hung Ho — No. C 43990 — Exp. 06/30/11 — CIVIL — STATE OF CALIFORNIA

The State of California or its officers or agents shall not be responsible for the accuracy or completeness of electronic copies of this plan sheet.

T.Y. LIN / MOFFATT & NICHOL
825 BATTERY STREET
SAN FRANCISCO, CA 94111

Caltrans now has a web site! To get to the web site, go to: http://www.dot.ca.gov

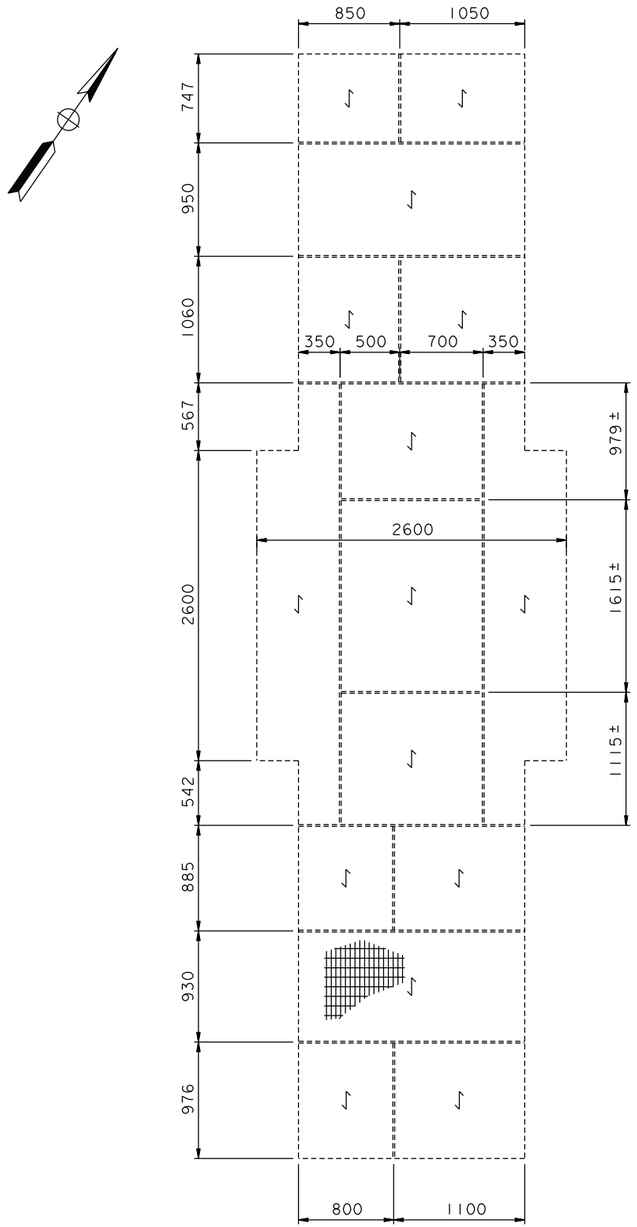

REMOVABLE GRATING PLAN ABOVE EL 53.85

1:25

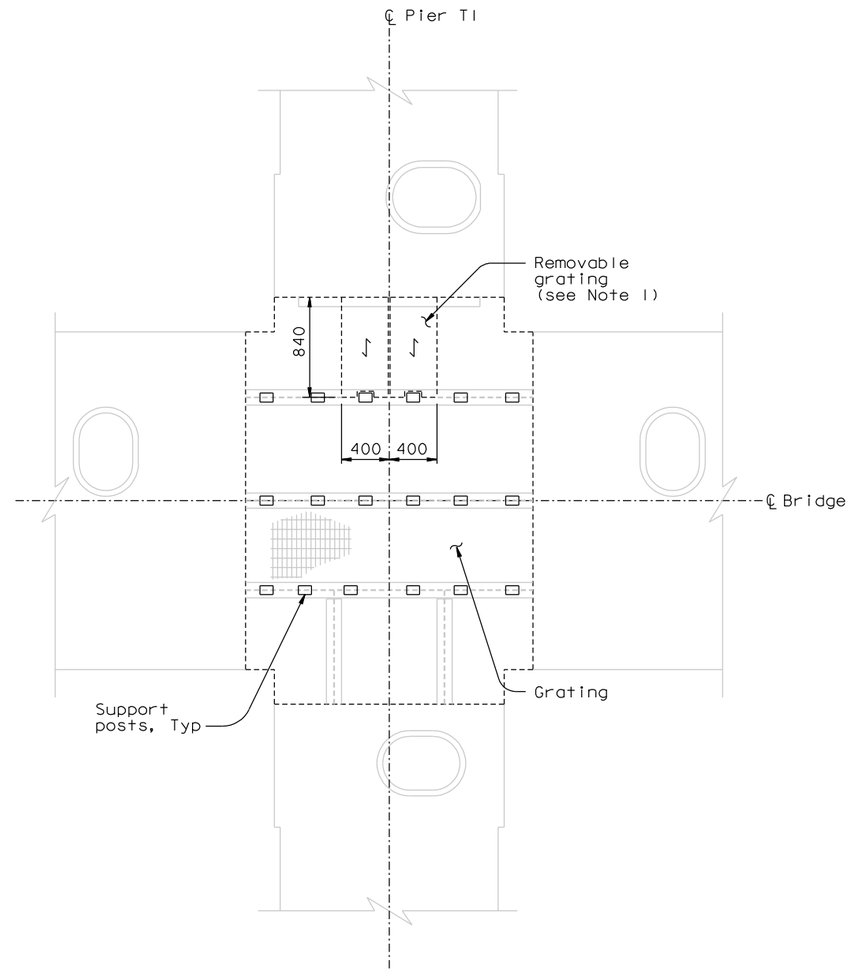

REMOVABLE GRATING PLAN @ EL 53.85

1:25

LEGEND:

Direction of bearing bars

or Grating edges

NOTES:

1. Modify the grating to create a removable panel at indicated location.

CONTRACT CHANGE ORDER NO. ____
SHEET ____ OF ____

REQUESTS FOR INFORMATION NOT ADDRESSED IN THIS CCO REMAIN IN FORCE

ALL DIMENSIONS ARE IN MILLIMETERS UNLESS OTHERWISE SHOWN

R. Valizadeh/V. Toan/Y.L./W.L./F.C.
DESIGN OVERSIGHT
SIGN OFF DATE 03/25/11

MARK	DATE	DESCRIPTIONS	BY	CH'D	CCO#
0	03/25/11	MISCELLANEOUS ELEVATOR DETAILS	TH	NV	174

REVISIONS

	BY	CHECKED
DESIGN	T. Ho	N. Vo
DETAILS	C. Neff	A. Baumberger
QUANTITIES	C. Neff	A. Baumberger

PREPARED FOR THE STATE OF CALIFORNIA DEPARTMENT OF TRANSPORTATION

R. Manzanarez
PROJECT ENGINEER

BRIDGE NO. 34-0006L/R
KILOMETER POST 13.2/13.9

SAN FRANCISCO OAKLAND BAY BRIDGE
EAST SPAN SEISMIC SAFETY PROJECT
SELF-ANCHORED SUSPENSION BRIDGE
(SUPERSTRUCTURE & TOWER)

TOWER ACCESS DETAILS NO. 26

Rev. Date: 5-18-98

ORIGINAL SCALE IN MILLIMETERS FOR REDUCED PLANS 0 10 20 30 40 50 60 70 80 90 100

CU 04
EA 0120F1

DISREGARD PRINTS BEARING EARLIER REVISION DATES 03/25/11

REVISION DATES (PRELIMINARY STAGE ONLY)

SHEET 521S4 OF

FILE => I:\bb\04-012001\sas\contract plans and cco\cco\cco#174\2-revision 03-25-11\dgn\akacc22d.dgn

100 % PS&E

DATE PLOTTED => 25 MAR 2011 TIME PLOTTED => 12:09:57

USERNAME => PTom

DIST.	COUNTY	ROUTE	KILOMETER POST TOTAL PROJECT	SHEET NO.	TOTAL SHEETS
04	SF	80	13.2/13.9	938S5	1204

Caltrans Metric

REGISTERED ENGINEER - CIVIL

03-25-11
PLANS APPROVAL DATE

REGISTERED PROFESSIONAL ENGINEER Tien Hung Ho No. C 43990 Exp. 06/30/11 CIVIL STATE OF CALIFORNIA

The State of California or its officers or agents shall not be responsible for the accuracy or completeness of electronic copies of this plan sheet.

T.Y. LIN / MOFFATT & NICHOL
825 BATTERY STREET
SAN FRANCISCO, CA 94111

Caltrans now has a web site! To get to the web site, go to: http://www.dot.ca.gov

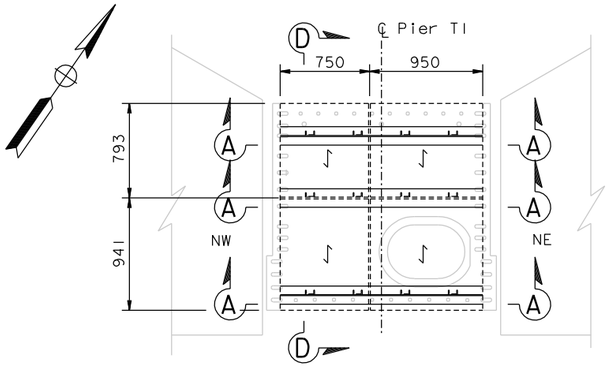

EL 89.85

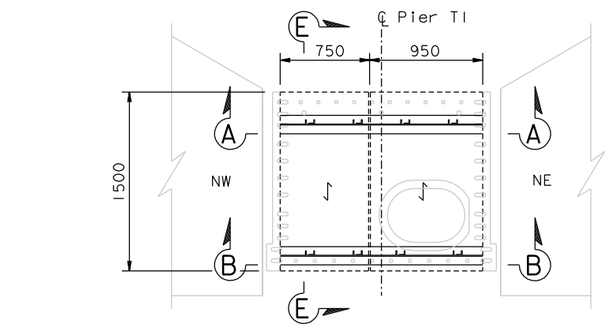

EL 127.85

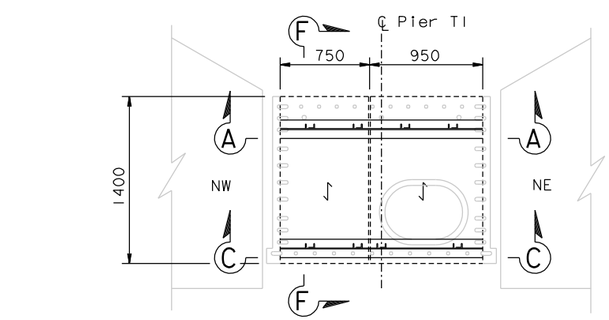

EL 139.85

PLAN AT TOP OF REMOVABLE GRATING
1:25

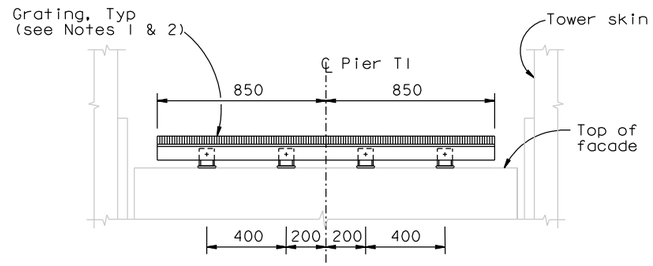

SECTION A-A
1:15

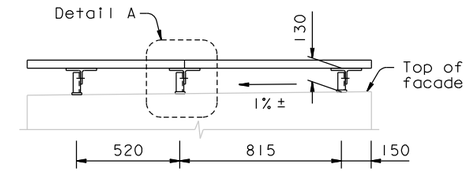

SECTION D-D
1:15

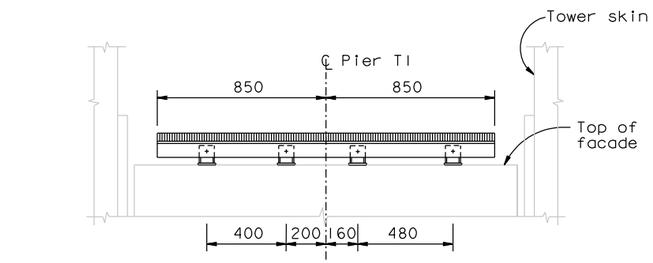

SECTION B-B
1:15

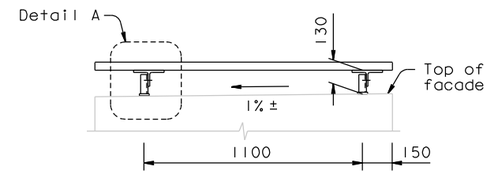

SECTION E-E
1:15

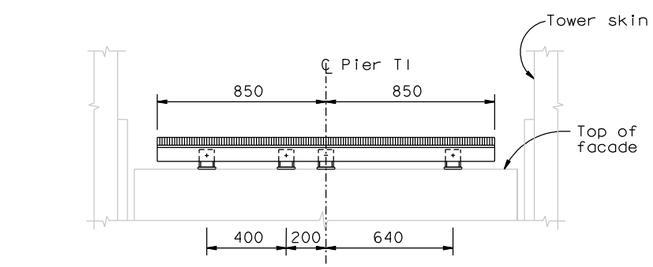

SECTION C-C
1:15

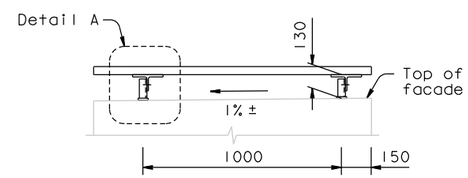

SECTION F-F
1:15

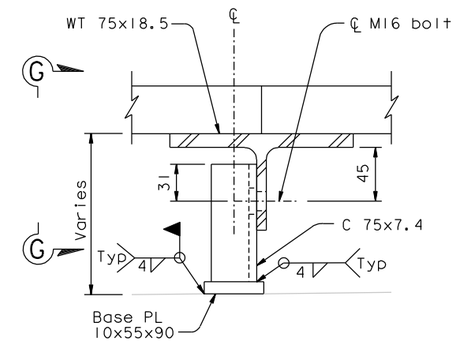

DETAIL A
1:2.5

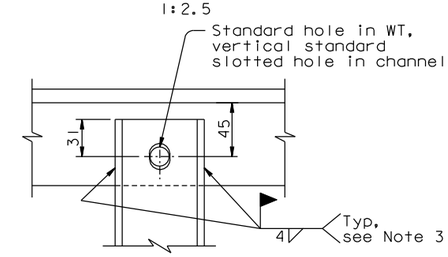

SECTION G-G
1:2.5

LEGEND:

Direction of bearing bars

or Grating edges

NOTES:

1. The Contractor shall provide fiberglass grating with fasteners. The grating shall be rated to support 5 kN/m2 loading with deflection not greater than 1 mm.
2. The top of the grating shall be level.
3. Welding of channel to WT shall be performed after top of WT is level.

CONTRACT CHANGE ORDER NO. _____
SHEET ____ OF ____

REQUESTS FOR INFORMATION NOT ADDRESSED IN THIS CCO REMAIN IN FORCE

ALL DIMENSIONS ARE IN MILLIMETERS UNLESS OTHERWISE SHOWN

R. Valizadeh/V. Toan/Y.L./W.L./F.C.
DESIGN OVERSIGHT
SIGN OFF DATE 03/25/11

MARK	DATE	DESCRIPTIONS	BY	CH'D	CCO#
0	03/25/11	MISCELLANEOUS ELEVATOR DETAILS	TH	NV	174

REVISIONS

DESIGN	BY T. Ho	CHECKED	N. Vo
DETAILS	BY C. Neff	CHECKED	A. Baumberger
QUANTITIES	BY C. Neff	CHECKED	A. Baumberger

PREPARED FOR THE STATE OF CALIFORNIA DEPARTMENT OF TRANSPORTATION

R. Manzanarez
PROJECT ENGINEER

BRIDGE NO. 34-0006L/R
KILOMETER POST 13.2/13.9

SAN FRANCISCO OAKLAND BAY BRIDGE
EAST SPAN SEISMIC SAFETY PROJECT
SELF-ANCHORED SUSPENSION BRIDGE
(SUPERSTRUCTURE & TOWER)

TOWER ACCESS DETAILS NO. 27

Rev. Date: 5-18-98

ORIGINAL SCALE IN MILLIMETERS FOR REDUCED PLANS 0 10 20 30 40 50 60 70 80 90 100

CU 04
EA 0120F1

DISREGARD PRINTS BEARING EARLIER REVISION DATES

REVISION DATES (PRELIMINARY STAGE ONLY) 03/25/11

SHEET 521S5 OF

FILE => I:\bb\04-01200I\sas\contract plans and cco\cco\cco#174\2-revision 03-25-11\dgn\akacc22e.dgn

100 % PS&E

DATE PLOTTED => 25 MAR 2011 TIME PLOTTED => 12:10:26

USERNAME => PTom

DIST.	COUNTY	ROUTE	KILOMETER POST TOTAL PROJECT	SHEET NO.	TOTAL SHEETS
04	SF	80	13.2/13.9	939R3	1204

George Baker
REGISTERED ENGINEER - CIVIL
12-6-04
PLANS APPROVAL DATE

REGISTERED PROFESSIONAL ENGINEER George S. Baker No. C 57112 Exp. 12/31/05 CIVIL STATE OF CALIFORNIA

The State of California or its officers or agents shall not be responsible for the accuracy or completeness of electronic copies of this plan sheet.

T.Y. LIN / MOFFATT & NICHOL
825 BATTERY STREET
SAN FRANCISCO, CA 94111

Caltrans now has a web site! To get to the web site, go to: http://www.dot.ca.gov

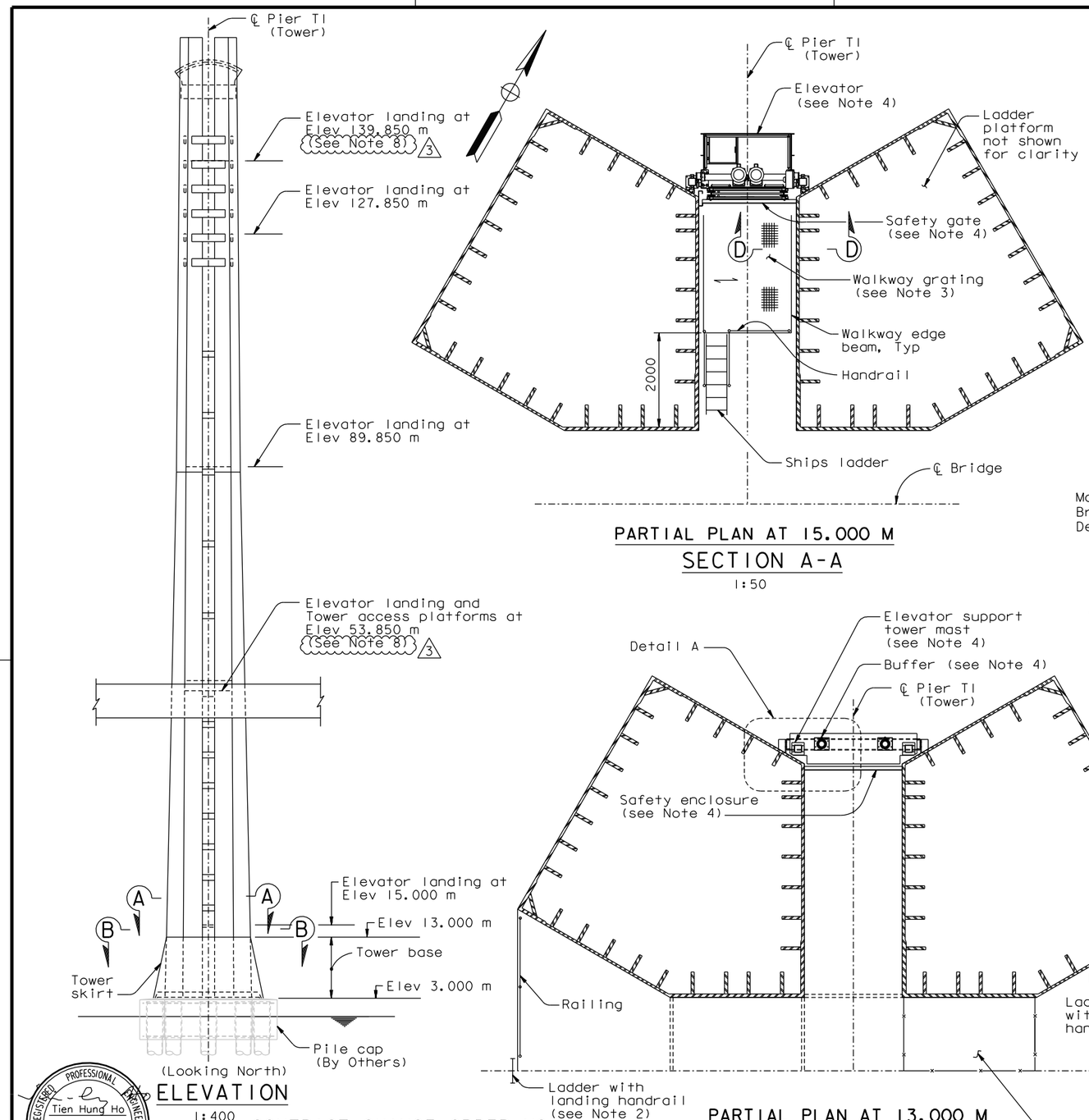

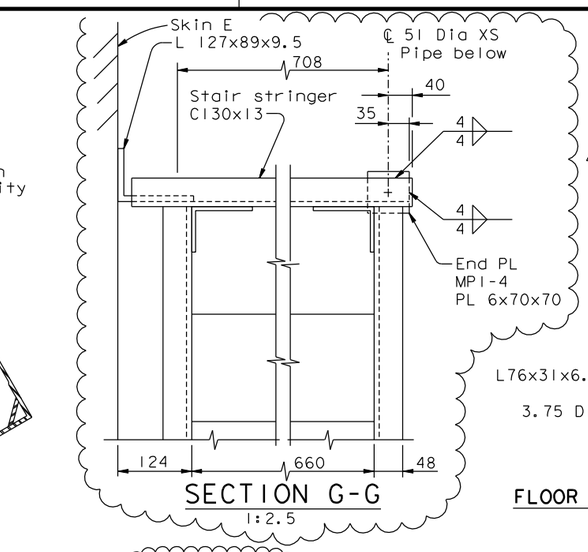

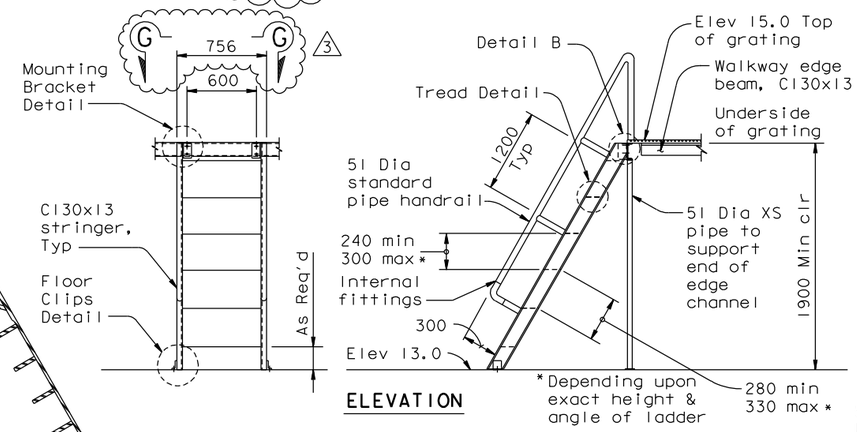

FLOOR CLIPS DETAIL

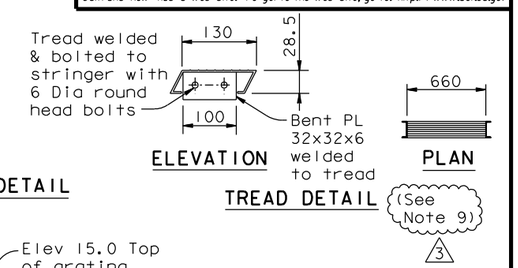

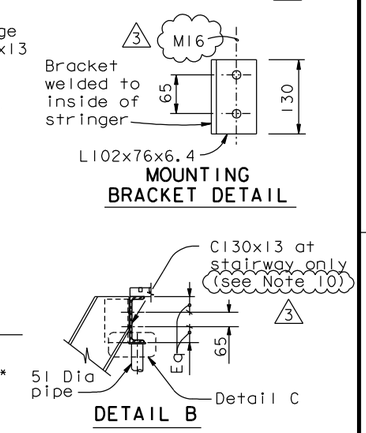

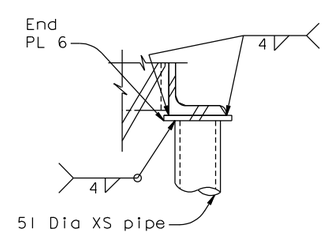

NOTES:

1. For elevator landing details at elevations 139.850 and 89.850, see "Tower Access Details No.3" sheet.
2. For ladder and landing handrail details, see "Tower Access Details No.7" sheet. For railing details, see Tower Access Details No.8" sheet.
3. Gratings at elevation 15.000 shall have a working load of 7 kN/m (145psf).
4. For elevator and elevator appurtenances, see "Road Plans" sheets.
5. (NOTE DELETED)
6. For elevator landing details at elevation 53.850, see "Tower Access Details No.10" sheet.
7. For Detail A, Section C-C and Section D-D, see "Tower Elevator Support Details No.2" sheet.
8. For optional elevator landings, see "Road Plans"
9. At the Contractor's option, stair treads may be C130x13. The top outward facing corner of each channel shall be ground to radius of 3 mm. Tread shall be provided with a slip-resistant surface.
10. At the Contractor's option, C130x10.4 may be used for the platform grating support beam at top of stairway only.

3

Tien Hung Ho
REGISTERED PROFESSIONAL ENGINEER No. C 43990 Exp. 06/30/11 CIVIL STATE OF CALIFORNIA

FOR REVISIONS ONLY

CONTRACT CHANGE ORDER NO. ____
SHEET ____ OF ____

REQUESTS FOR INFORMATION NOT ADDRESSED IN THIS CCO REMAIN IN FORCE

MARK	DATE	DESCRIPTIONS	BY	CH'D	CCO#
3	12/10/10	MISCELLANEOUS ELEVATOR DETAILS	TH	MN	174
2	10/15/10	HANDRAIL AND PLATFORMS	TH	MN	114
1	07/17/09	ELEVATOR DETAILS	TH	MN	85

REVISIONS

R. Valizadeh/V. Toan/Y.L./W.L./F.C.
DESIGN OVERSIGHT
Ryan Valizadeh / Vong Toan / Y. Liu
SIGN OFF DATE 12/10/10

	BY	CHECKED
DESIGN	G. Baker	L. Rus
DETAILS	S. Camo	L. Rus
QUANTITIES	D. Turner	J. Leventini

PREPARED FOR THE STATE OF CALIFORNIA DEPARTMENT OF TRANSPORTATION

R. Manzanarez
PROJECT ENGINEER

ALL DIMENSIONS ARE IN MILLIMETERS UNLESS OTHERWISE SHOWN

BRIDGE NO. 34-0006L/R
KILOMETER POST 13.2/13.9

SAN FRANCISCO OAKLAND BAY BRIDGE
EAST SPAN SEISMIC SAFETY PROJECT
SELF-ANCHORED SUSPENSION BRIDGE
(SUPERSTRUCTURE & TOWER)

TOWER ELEVATOR SUPPORT DETAILS NO. 1

Rev. Date: 5-18-98

ORIGINAL SCALE IN MILLIMETERS FOR REDUCED PLANS 0 10 20 30 40 50 60 70 80 90 100

CU 04
EA 0120F1

DISREGARD PRINTS BEARING EARLIER REVISION DATES 04/08/02 07/01/02 12/19/02 11/13/05

SHEET 522R3 OF

FILE => I:\bb\04-012001\sas\contract plans and cco\cco\cco#174\1-original 12-10-10\dgn\akele01.dgn

USERNAME => DWinrow DATE PLOTTED => 10 DEC 2010 TIME PLOTTED => 09:50:04

100 % PS&E