DIST.	COUNTY	ROUTE	KILOMETER POST TOTAL PROJECT	SHEET NO.	TOTAL SHEETS
04	SF	80	13.2/13.9	917R5	1204

REGISTERED ENGINEER - CIVIL

12-6-04
PLANS APPROVAL DATE

REGISTERED PROFESSIONAL ENGINEER Marwan N. Nader No. C 054426 Exp. 12/31/11 CIVIL STATE OF CALIFORNIA

The State of California or its officers or agents shall not be responsible for the accuracy or completeness of electronic copies of this plan sheet.

T.Y. LIN / MOFFATT & NICHOL
825 BATTERY STREET
SAN FRANCISCO, CA 94111

Caltrans now has a web site! To get to the web site, go to: http://www.dot.ca.gov

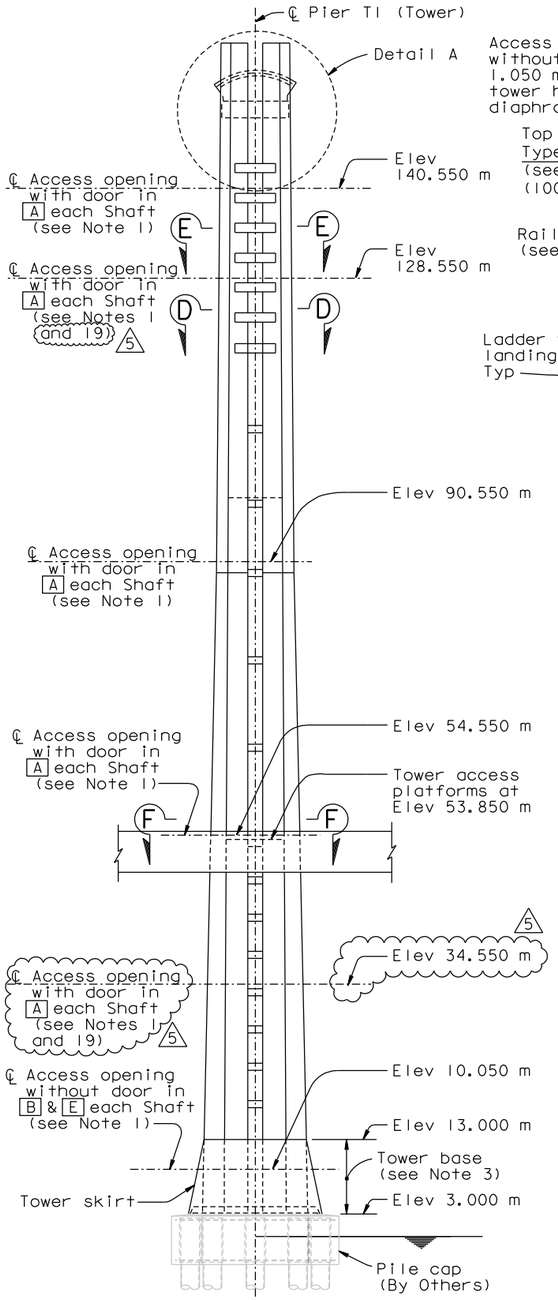

ELEVATION
1:400
(Looking North)

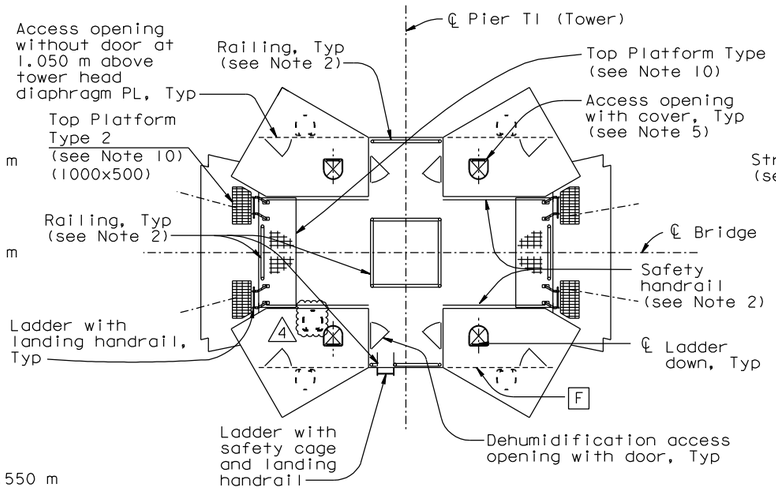

VIEW B-B (See Notes 7 & 18)
1:80

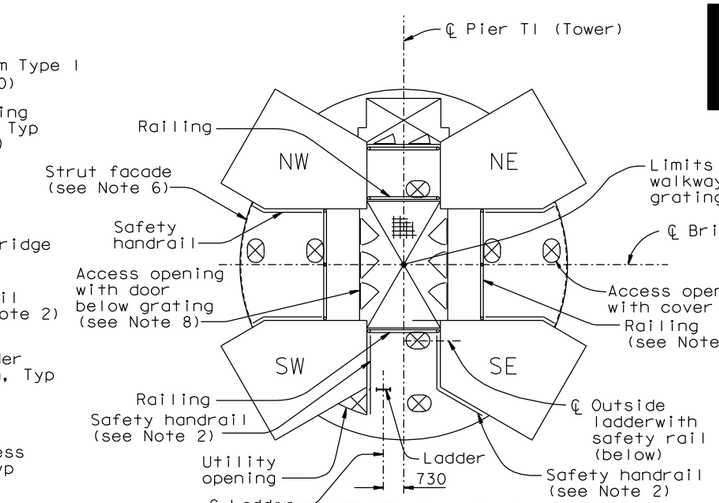

SECTION C-C
1:80

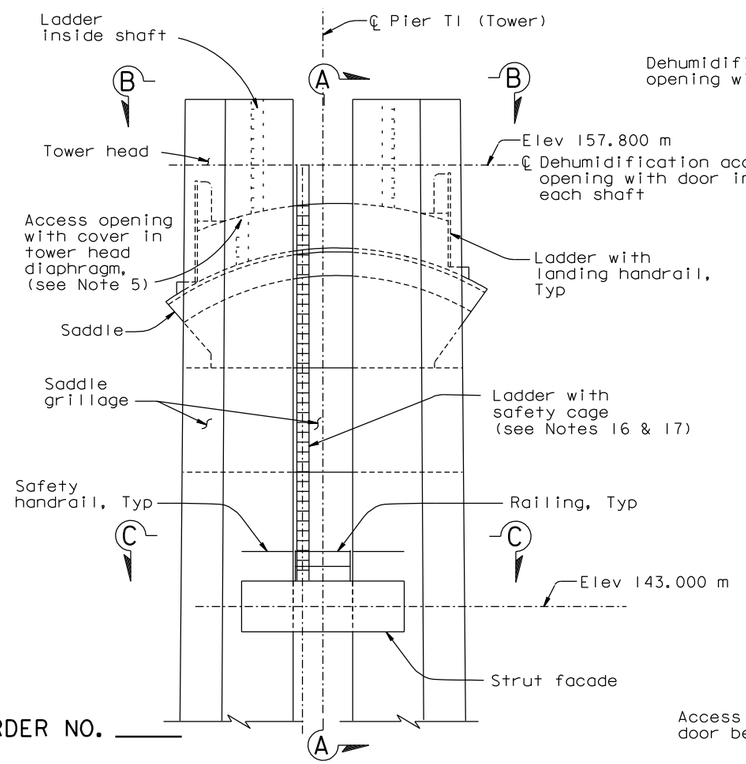

DETAIL A
1:100

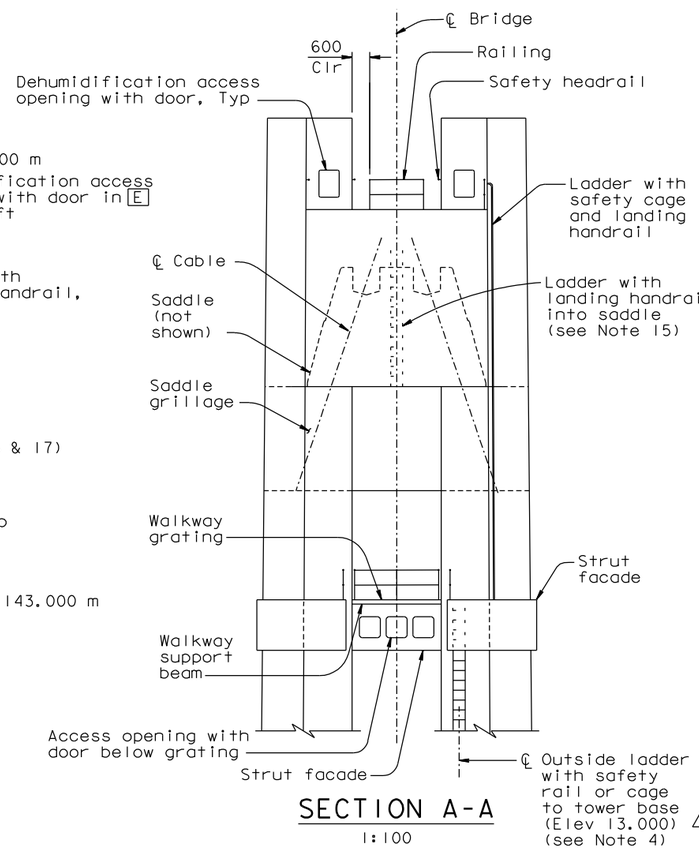

SECTION A-A
1:100

ALL DIMENSIONS ARE IN MILLIMETERS UNLESS OTHERWISE SHOWN

LEGEND:

▽ Access opening (see Notes 1, 3, 8 & 14)

[A] Tower shaft skin plate A

NOTES:

1. For location of access openings in tower shafts, see "Tower Shaft Details" sheets.
2. For railing and safety handrail details, see "Tower Access Details No. 8" sheet.
3. For additional access details in tower base, see "Tower Access Details No. 2" sheet.
4. For ladder details not shown, see "Tower Access Details No. 7" sheet.
5. For access opening details, see Detail E on "Tower Access Details No. 8" sheet. For cover details, see "Tower Access Details No. 9" sheet.
6. For strut facade, see "Tower Strut Facade Details" sheets.
7. For location of access openings in tower head, see "Tower Head Details" sheets.
8. For access opening and door details, see "Tower Access Detail No. 4" sheet. Access openings are without door unless noted otherwise.
9. For Section D-D and E-E, see "Tower Access Details No. 3" sheet.
10. For Top Platform Types 1 and 2, see "Tower Access Detail No. 9" sheet.
11. For Section F-F, see "Tower Access Details No. 10" sheet.
12. For walkway grating and support beam, see "Tower Access Details No. 3" sheet.
13. For access opening cover details, see "Tower Access Details No. 9" sheet.
14. For location of access openings in strut facade, see "Tower Strut Facade Details" sheets.
15. For location of saddle access opening and ladder, see "Tower Saddle Housing Details" sheets.
16. At locations where ladder lengths exceed 6.5 meters, contraction joints shall be provided. Ladder length is defined as the distance between the centerlines of the top and bottom end supports. Contraction joints shall be located below ladder supports unless noted otherwise. For contraction joint details, see "Tower Access Details No. 7" sheet.
17. Ladder supports shall be spaced at 6 meters maximum.
18. For ladder, railing and safety handrail, and top platform details not shown, see "Tower Access Details No. 1A" sheet.
19. 5 At the Contractor's option, additional access openings may be provided at these elevations.

CONTRACT CHANGE ORDER NO. ____
SHEET ____ OF ____

REQUESTS FOR INFORMATION NOT ADDRESSED IN THIS CCO REMAIN IN FORCE

MARK	DATE	DESCRIPTIONS	BY	CH'D	CCO#
5	12/10/10	MISCELLANEOUS ELEVATOR DETAILS	NV	MN	174
4	10/29/10	DOORS AND LADDER CAGES	NV	MN	118
3	10/22/10	TOWER HEAD DETAILS	NV	MN	93
2	07/17/09	ELEVATOR DETAILS	TH	MN	85
1	07/18/08	TOWER ACCESS	NV	MN	65

REVISIONS

R. Valizadeh/V. Toan/Y.L./W.L./F.C.
DESIGN OVERSIGHT
SIGN OFF DATE 12/10/10

	BY	CHECKED
DESIGN	M. Nader	M. Gulyas
DETAILS	G. Baker	L. Rus
QUANTITIES	D. Turner	J. Leventini

PREPARED FOR THE STATE OF CALIFORNIA DEPARTMENT OF TRANSPORTATION

R. Manzanarez
PROJECT ENGINEER

BRIDGE NO. 34-0006L/R
KILOMETER POST 13.2/13.9

SAN FRANCISCO OAKLAND BAY BRIDGE
EAST SPAN SEISMIC SAFETY PROJECT
SELF-ANCHORED SUSPENSION BRIDGE
(SUPERSTRUCTURE & TOWER)

TOWER ACCESS DETAILS NO. 1

Rev. Date: 5-18-98

ORIGINAL SCALE IN MILLIMETERS FOR REDUCED PLANS 0 10 20 30 40 50 60 70 80 90 100

CU 04
EA 0120F1

DISREGARD PRINTS BEARING EARLIER REVISION DATES

REVISION DATES (PRELIMINARY STAGE ONLY): 05/15/99 08/02/99 05/31/01 04/08/02 07/01/02 12/18/02 10/12/04

SHEET 500R5 OF

FILE => I:\bb\04-012001\sas\contract plans and cco\cco\cco#174\1-original 12-10-10\dgn\akacc06.dgn

USERNAME => DWinrow DATE PLOTTED => 10 DEC 2010 TIME PLOTTED => 09:49:37

100 % PS&E