DIST.	COUNTY	ROUTE	KILOMETER POST TOTAL PROJECT	SHEET NO.	TOTAL SHEETS
04	SF	80	13.2/13.9	876S3	1204

REGISTERED ENGINEER - CIVIL

11-12-10
PLANS APPROVAL DATE

The State of California or its officers or agents shall not be responsible for the accuracy or completeness of electronic copies of this plan sheet.

PROFESSIONAL ENGINEER REGISTERED James P. Duxbury No. C 64677 Exp. 06/30/11 CIVIL STATE OF CALIFORNIA

T.Y. LIN / MOFFATT & NICHOL
825 BATTERY STREET
SAN FRANCISCO, CA 94111

Caltrans now has a web site! To get to the web site, go to: http://www.dot.ca.gov

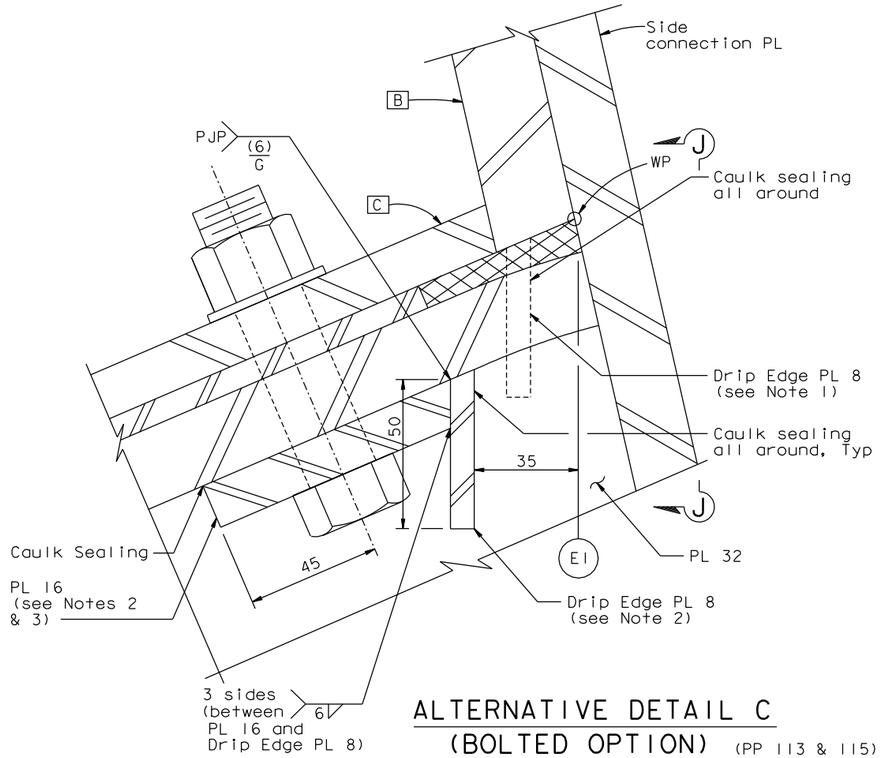

ALTERNATIVE DETAIL C
(BOLTED OPTION) (PP 113 & 115)
1:1

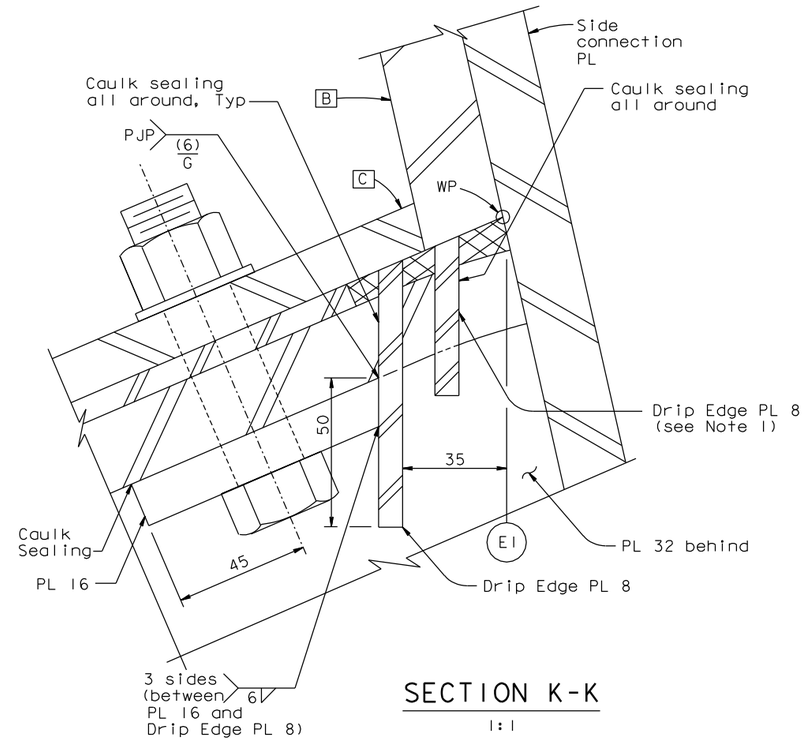

SECTION K-K
1:1

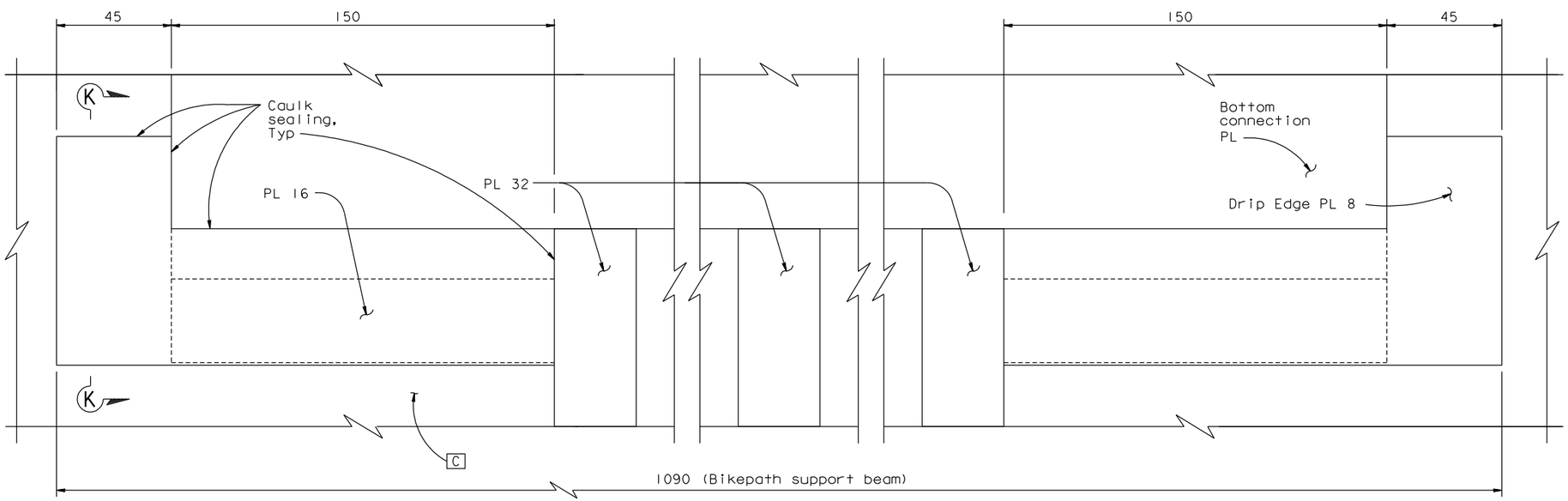

VIEW J-J
1:1

NOTES:

1. Drip Edge PL 8 welded to Girder Face C terminates at bikepath cantilever beam. Caulk sealing shall be applied all around the termination.
2. PL 16 and Drip Edge PL 8 shall be pre-assembled prior to field installation.
3. At the Contractor's option, short-slotted holes or standard oversized holes are acceptable in Drip Edge PL 8, provided hardened washers are used.

CONTRACT CHANGE ORDER NO. ____
SHEET ____ OF ____

REQUESTS FOR INFORMATION NOT ADDRESSED IN THIS CCO REMAIN IN FORCE

ALL DIMENSIONS ARE IN MILLIMETERS UNLESS OTHERWISE SHOWN

R. Valizadeh/V. Toan/Y.L./W.L./F.C.
DESIGN OVERSIGHT
SIGN OFF DATE 11/12/10

MARK	DATE	DESCRIPTIONS	BY	CH'D	CCO#
0	11/12/10	MISCELLANEOUS BIKEPATH DETAILS	RB	JD	172

REVISIONS

DESIGN	BY	R. Boundouki	CHECKED	J. Duxbury
DETAILS	BY	R. Boundouki	CHECKED	J. Duxbury
QUANTITIES	BY	R. Boundouki	CHECKED	J. Duxbury

PREPARED FOR THE STATE OF CALIFORNIA DEPARTMENT OF TRANSPORTATION

R. Manzanarez
PROJECT ENGINEER

BRIDGE NO. 34-0006L/R
KILOMETER POST 13.2/13.9

SAN FRANCISCO OAKLAND BAY BRIDGE
EAST SPAN SEISMIC SAFETY PROJECT
SELF-ANCHORED SUSPENSION BRIDGE
(SUPERSTRUCTURE & TOWER)

DECK DRAINAGE DETAILS NO. IC

Rev. Date: 5-18-98

ORIGINAL SCALE IN MILLIMETERS FOR REDUCED PLANS 0 10 20 30 40 50 60 70 80 90 100

CU 04
EA 0120F1

DISREGARD PRINTS BEARING EARLIER REVISION DATES

REVISION DATES (PRELIMINARY STAGE ONLY) 11/12/10

SHEET 459S3 OF

FILE => L:\BB\04-012001\SAS\Contract Plans and CCO\CCO\CCO#172\2-Revision 02-16-11\DGN\akdkd01c.dgn

100% PS&E

USERNAME => arivera DATE PLOTTED => 12 JUN 2012 TIME PLOTTED => 10:52:03