DIST.	COUNTY	ROUTE	KILOMETER POST TOTAL PROJECT	SHEET NO.	TOTAL SHEETS
04	SF	80	13.2/13.9	876SIRI	1204

REGISTERED ENGINEER - CIVIL

10-30-09
PLANS APPROVAL DATE

REGISTERED PROFESSIONAL ENGINEER James P. Duxbury No. C 64677 Exp. 06/30/11 CIVIL STATE OF CALIFORNIA

The State of California or its officers or agents shall not be responsible for the accuracy or completeness of electronic copies of this plan sheet.

T.Y. LIN / MOFFATT & NICHOL
825 BATTERY STREET
SAN FRANCISCO, CA 94111

Caltrans now has a web site! To get to the web site, go to: http://www.dot.ca.gov

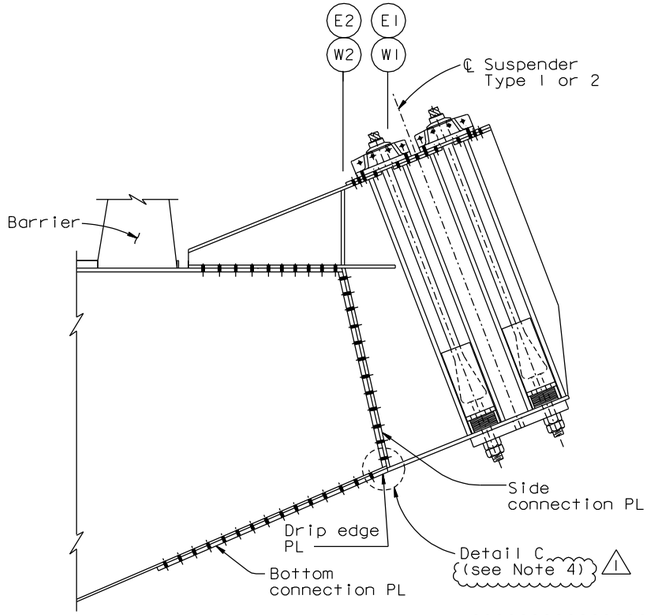

SECTION F-F
(Section F'-F' Similar) (See Note 3)
1:20

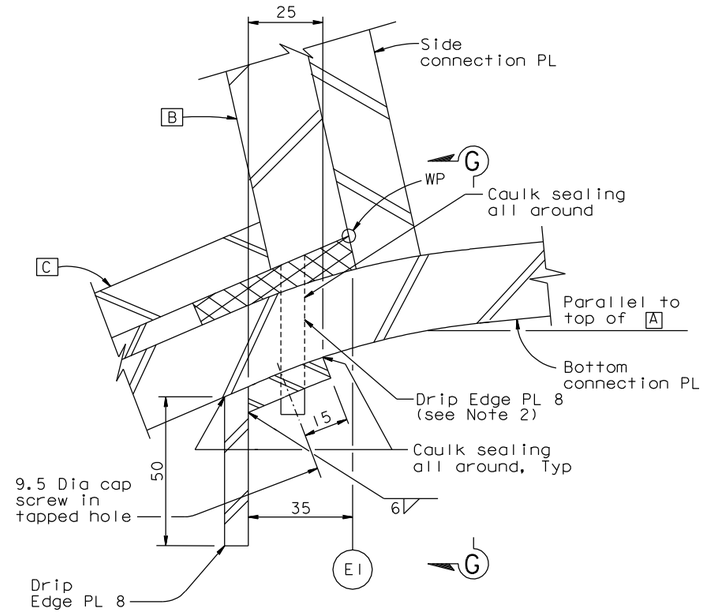

DETAIL C
(See Note 4)
1:1

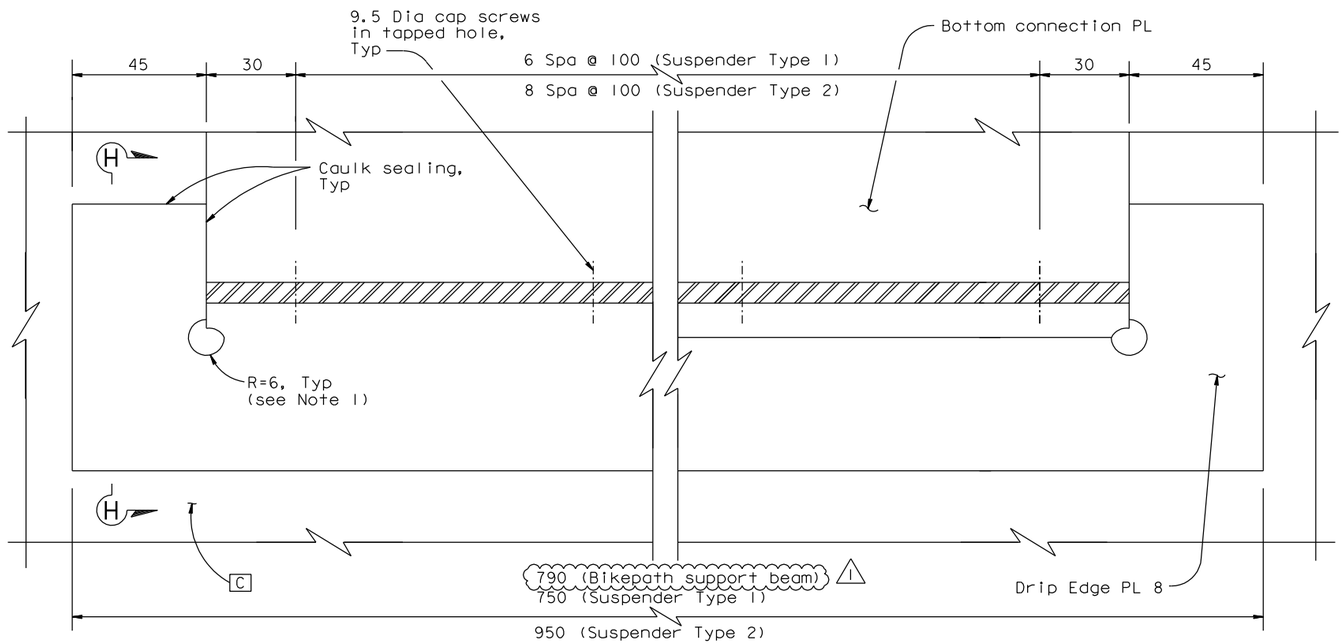

VIEW G-G
1:1

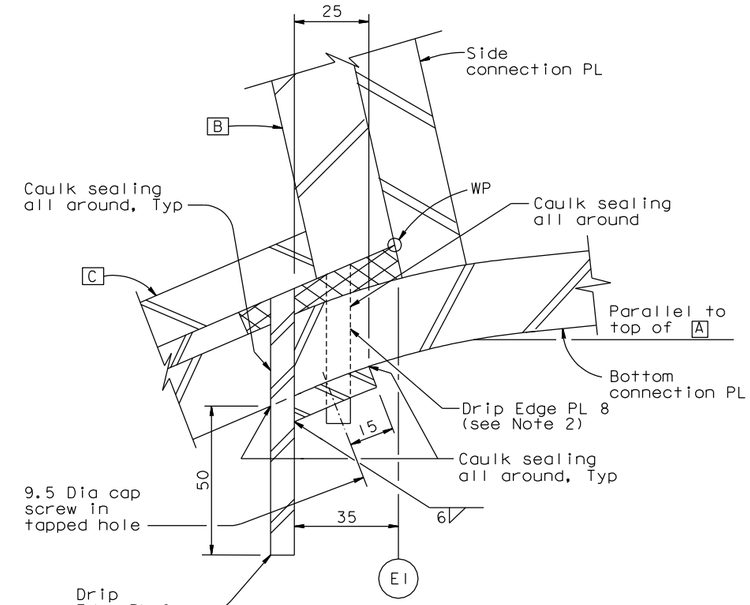

SECTION H-H
1:1

NOTES:

1. Round cope is provided for Contractor's fabrication and is optional. The cope shall be filled with caulk after drip edge PL installation.
2. Drip edge PL 8 welded to Girder Face C terminates at suspender bracket or bikepath cantilever beam where applicable. Caulk sealing shall be applied all around the termination. (See also Alternative Details on "Deck Drainage Details No. 1B" sheet.
3. Section F'-F' is at location of bikepath support beam (E Line only).
4. Use detail at bikepath odd number panel points, from PP 9 to PP 111 and PP 117. For PP 113 and PP 115, see "Alternative Detail C" on "Deck Drainage Details No. 1C" sheet.

CONTRACT CHANGE ORDER NO. _____
SHEET ____ OF ____

REQUESTS FOR INFORMATION NOT ADDRESSED IN THIS CCO REMAIN IN FORCE

ALL DIMENSIONS ARE IN MILLIMETERS UNLESS OTHERWISE SHOWN

R. Valizadeh/V. Toan/Y.L./W.L./F.C.
DESIGN OVERSIGHT
SIGN OFF DATE 11/12/10

MARK	DATE	DESCRIPTIONS	BY	CH'D	CCO#
1	11/12/10	MISCELLANEOUS BIKEPATH DETAILS	CC	JD	172
0	10/30/09	MOD. SUSP. BRACKETS & CABLE SYSTEM	CC	JD	37

REVISIONS

	BY	CHECKED
DESIGN	C. Choi	J. Duxbury
DETAILS	C. Choi	J. Duxbury
QUANTITIES	C. Choi	J. Duxbury

PREPARED FOR THE STATE OF CALIFORNIA DEPARTMENT OF TRANSPORTATION

R. Manzanarez
PROJECT ENGINEER

BRIDGE NO. 34-0006L/R
KILOMETER POST 13.2/13.9

SAN FRANCISCO OAKLAND BAY BRIDGE
EAST SPAN SEISMIC SAFETY PROJECT
SELF-ANCHORED SUSPENSION BRIDGE
(SUPERSTRUCTURE & TOWER)

DECK DRAINAGE DETAILS NO. 1A

Rev. Date: 5-18-98

ORIGINAL SCALE IN MILLIMETERS FOR REDUCED PLANS 0 10 20 30 40 50 60 70 80 90 100

CU 04
EA 0120F1

DISREGARD PRINTS BEARING EARLIER REVISION DATES 10/30/09

REVISION DATES (PRELIMINARY STAGE ONLY)

SHEET 459SIRI OF

FILE => I:\bb\04-01200I\sas\contract plans and cco\cco\cco#172\1-original 11-12-10\dgn\akdkd01a.dgn

USERNAME => DWinrow DATE PLOTTED => 12 NOV 2010 TIME PLOTTED => 12:37:00

100 % PS&E