DIST.	COUNTY	ROUTE	KILOMETER POST TOTAL PROJECT	SHEET NO.	TOTAL SHEETS
04	SF	80	13.2/13.9	876R4	1204

Caltrans Metric

George Baker
REGISTERED ENGINEER - CIVIL
12-6-04
PLANS APPROVAL DATE

REGISTERED PROFESSIONAL ENGINEER George S. Baker No. C57112 Exp. 12/31/05 CIVIL STATE OF CALIFORNIA

The State of California or its officers or agents shall not be responsible for the accuracy or completeness of electronic copies of this plan sheet.

T.Y. LIN / MOFFATT & NICHOL
825 BATTERY STREET
SAN FRANCISCO, CA 94111

Caltrans now has a web site! To get to the web site, go to: http://www.dot.ca.gov

REGISTERED PROFESSIONAL ENGINEER Daniel J. Turner No. C 65033 Exp. 06/30/11 CIVIL STATE OF CALIFORNIA

FOR REVISIONS ONLY

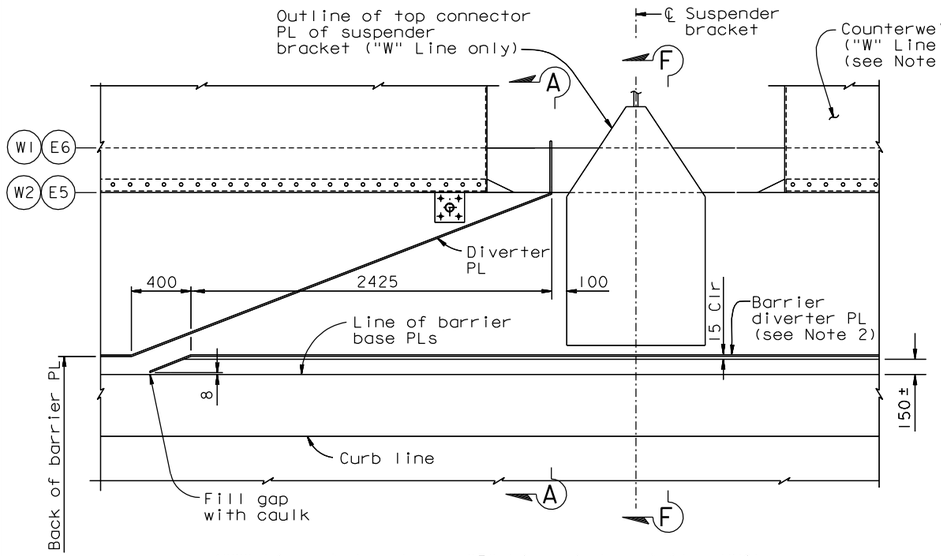

("W" Line girder shown. "E" Line girder similar UNO)

TYPICAL DRAINAGE PLAN TYPE 1

1:20 (See Notes 3 & 5)

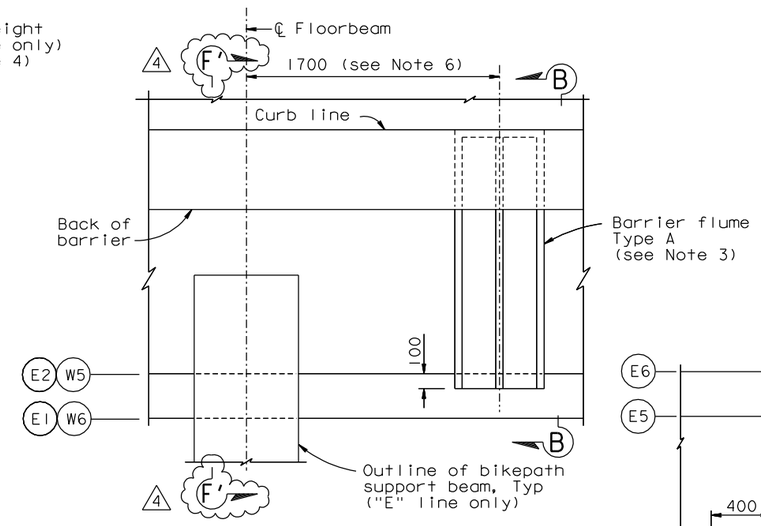

("E" Line girder shown. "W" Line girder similar UNO)

TYPICAL DRAINAGE PLAN TYPE 2

1:20 (See Note 3)

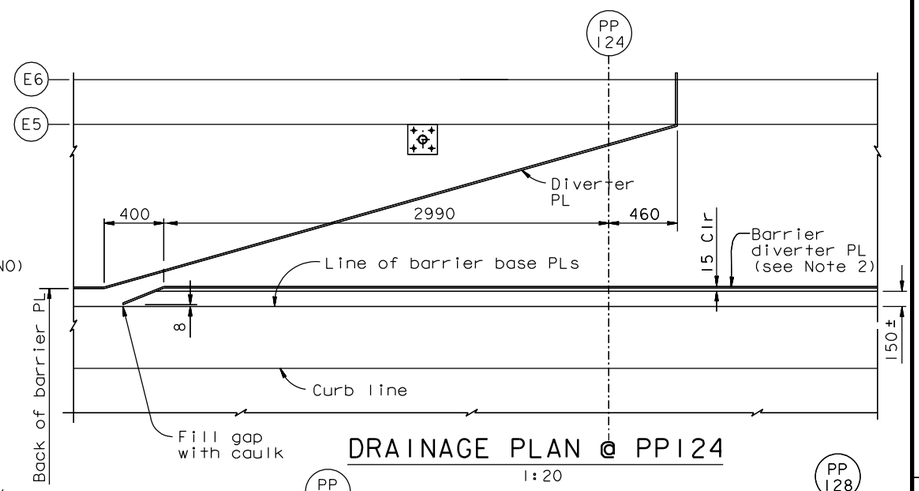

DRAINAGE PLAN @ PP124

1:20

NOTES:

1. For Sections A-A, A'-A', B-B and C-C, see "Deck Drainage Details No.2" sheet.
2. Barrier diverter plate shall be continuous along barriers near working lines W2 and E5, unless otherwise shown.
3. For barrier flume details and locations of drainage types 1, 2 and 3, see "Deck Drainage Details No.3" sheet.
4. For Counterweight details, see "Typical Girder Details" sheets.
5. Diverter plates may be shifted, subject to review and approval by the Engineer.
6. Barrier flumes may be shifted to avoid interferences with deck level utilities and fixtures, subject to review and approval of the Engineer. (4)
7. For Sections F-F and F'-F', see "Deck Drainage Details No.1A" sheet.

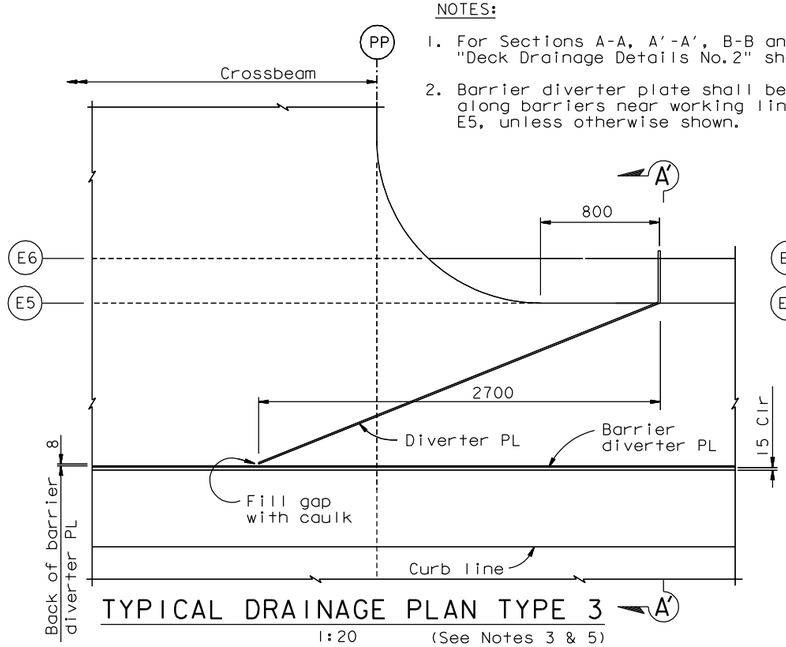

TYPICAL DRAINAGE PLAN TYPE 3

1:20 (See Notes 3 & 5)

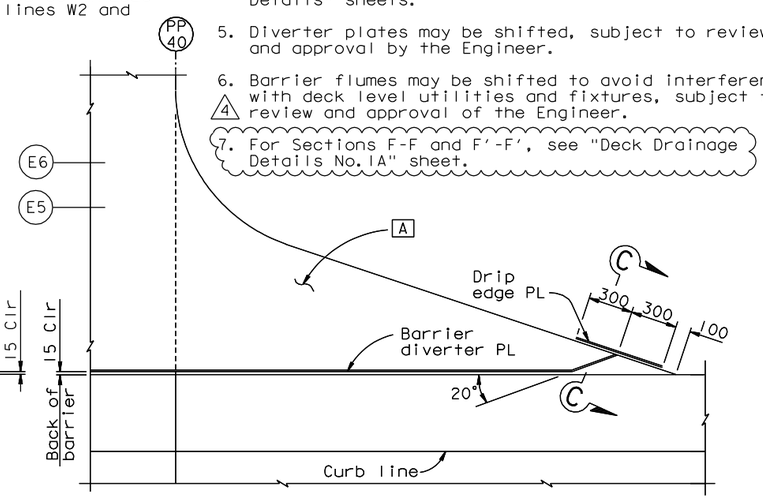

AT "E" LINE PP40 ONLY

DRAINAGE PLAN TYPE 4

1:20

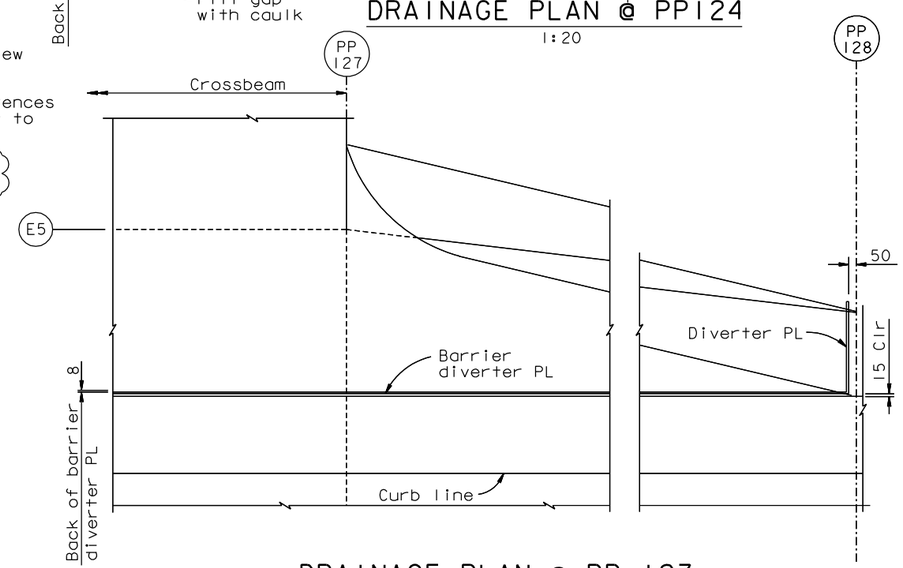

DRAINAGE PLAN @ PP 127

1:20

CONTRACT CHANGE ORDER NO. ____
SHEET ____ OF ____

REQUESTS FOR INFORMATION NOT ADDRESSED IN THIS CCO REMAIN IN FORCE

MARK	DATE	DESCRIPTIONS	BY	CH'D	CCO#
4	11/12/10	MISCELLANEOUS BIKEPATH DETAILS	CC	DT	172
3	10/30/09	MOD. SUSP. BRACKETS & CABLE SYSTEM	CC	DT	37
2	04/18/08	BARRIER MODIFICATIONS	AS	DT	44
1	08/24/07	BARRIER MODIFICATIONS	GB	DT	44

REVISIONS

R. Valizadeh/V. Toan/Y.L./W.L./F.C.
DESIGN OVERSIGHT
SIGN OFF DATE 11/12/10

	BY	CHECKED
DESIGN	G. Baker	T. Ho
DETAILS	D. Turner	T. Ho
QUANTITIES	G. Baker	D. Harrison

PREPARED FOR THE STATE OF CALIFORNIA DEPARTMENT OF TRANSPORTATION

R. Manzanarez
PROJECT ENGINEER

BRIDGE NO. 34-0006L/R
KILOMETER POST 13.2/13.9

ALL DIMENSIONS ARE IN MILLIMETERS UNLESS OTHERWISE SHOWN

SAN FRANCISCO OAKLAND BAY BRIDGE
EAST SPAN SEISMIC SAFETY PROJECT
SELF-ANCHORED SUSPENSION BRIDGE
(SUPERSTRUCTURE & TOWER)

DECK DRAINAGE DETAILS NO. 1

Rev. Date: 5-18-98

ORIGINAL SCALE IN MILLIMETERS FOR REDUCED PLANS 0 10 20 30 40 50 60 70 80 90 100

CU 04
EA 0120F1

DISREGARD PRINTS BEARING EARLIER REVISION DATES

REVISION DATES (PRELIMINARY STAGE ONLY) 05/15/99 08/02/99 05/31/01 04/08/02 07/01/02 12/19/02

SHEET 459R4 OF

FILE => I:\bb\04-012001\sas\contract plans and cco\cco\cco#172\1-original 11-12-10\dgn\akdkd01.dgn

USERNAME => DWinrow DATE PLOTTED => 12 NOV 2010 TIME PLOTTED => 12:35:43

100 % PS&E