DIST.	COUNTY	ROUTE	KILOMETER POST TOTAL PROJECT	SHEET NO.	TOTAL SHEETS
04	SF	80	13.2/13.9	831R3	1204

Caltrans Metric

REGISTERED ENGINEER - CIVIL

12-6-04
PLANS APPROVAL DATE

REGISTERED PROFESSIONAL ENGINEER Tien Hung Ho No. C 43990 Exp. 6/30/11 CIVIL STATE OF CALIFORNIA

The State of California or its officers or agents shall not be responsible for the accuracy or completeness of electronic copies of this plan sheet.

T.Y. LIN / MOFFATT & NICHOL
825 BATTERY STREET
SAN FRANCISCO, CA 94111

Caltrans now has a web site! To get to the web site, go to: http://www.dot.ca.gov

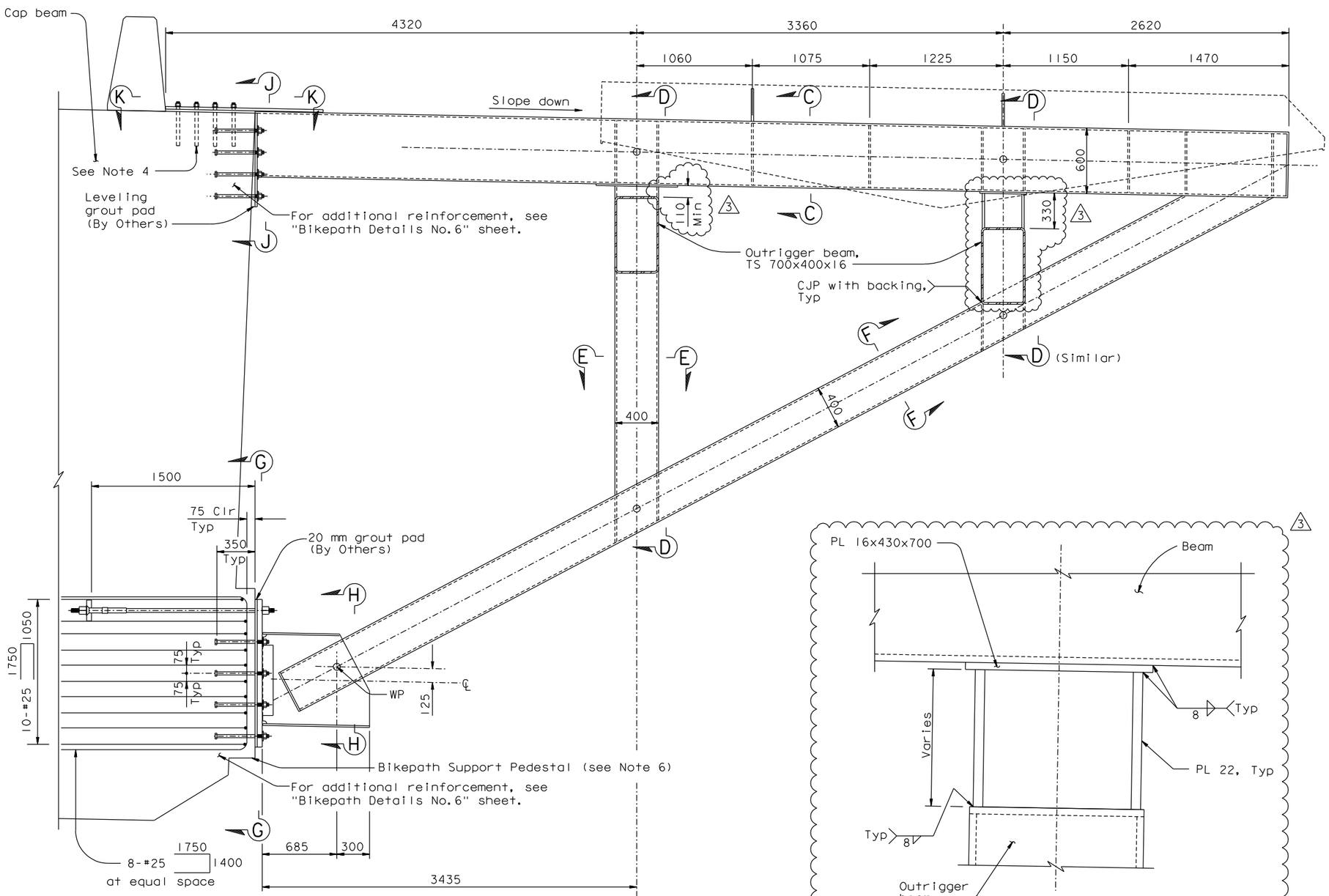

SECTION B-B Cantilever truss (Between PP 7 & PP 8)
1:20

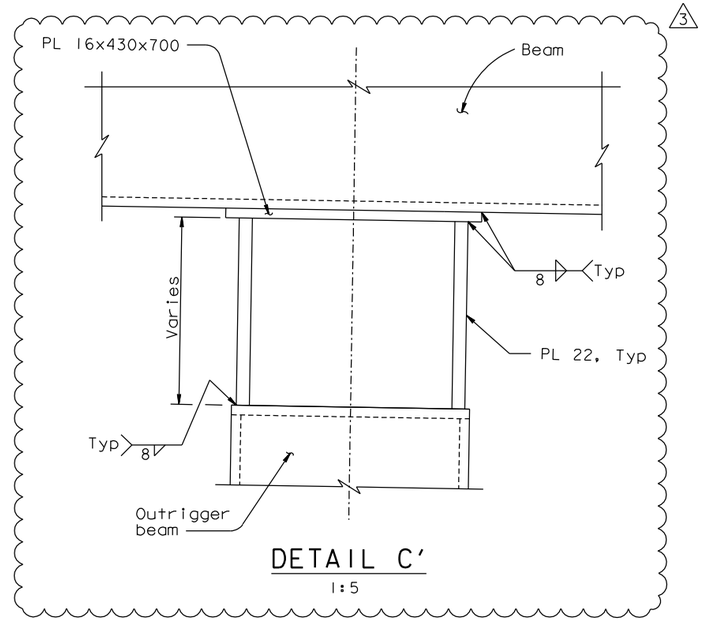

DETAIL C'
1:5

NOTES:

1. For outrigger truss, see "Bikepath Details No. 8" sheet.
2. For Sections J-J and K-K, see "Bikepath Details No. 6" sheet.
3. For Sections C-C through H-H, see "Bikepath Details No. 8" sheet.
4. Anchor bolts shall be ATM A345 Gr BC and grouted. Alternatively, the Contractor may provide M24x290 resin capsule anchors. Contractor shall furnish anchor bolts and core holes for their installation by Others. Installation of anchor bolts is not part of this Contract.
5. Cantilever Truss 1, Truss 2 and outrigger beam to be installed by Others after demolition of existing structure.
6. The Contractor may pour the Bikepath Support Pedestals in two stages to suit his means and methods. Details shall be submitted to the Engineer for review and approval.

CONTRACT CHANGE ORDER NO. _____
SHEET ___ OF ___

REQUESTS FOR INFORMATION NOT ADDRESSED IN THIS CCO REMAIN IN FORCE

MARK	DATE	DESCRIPTIONS	BY	CH'D	CCO#
3	11/12/10	MISCELLANEOUS BIKEPATH DETAILS	CC	TH	172
2	08/20/10	BIKEPATH DETAILS	CC	TH	99
1	05/04/07	W2 CAP BEAM ISD RESOLUTION	JD	TH	34S1

REVISIONS

R. Valizadeh/V. Toan/Y.L./W.L./F.C.
DESIGN OVERSIGHT
SIGN OFF DATE 11/12/10

	BY	CHECKED
DESIGN	T. Ho	T. McMeans
DETAILS	R. Xu	P. Ritchie
QUANTITIES	C. Bernardo	S. Shi

PREPARED FOR THE STATE OF CALIFORNIA DEPARTMENT OF TRANSPORTATION

R. Manzanarez
PROJECT ENGINEER

ALL DIMENSIONS ARE IN MILLIMETERS UNLESS OTHERWISE SHOWN

BRIDGE NO. 34-0006L/R
KILOMETER POST 13.2/13.9

SAN FRANCISCO OAKLAND BAY BRIDGE
EAST SPAN SEISMIC SAFETY PROJECT
SELF-ANCHORED SUSPENSION BRIDGE
(SUPERSTRUCTURE & TOWER)

BIKEPATH DETAILS NO. 7

Rev. Date: 5-18-98

ORIGINAL SCALE IN MILLIMETERS FOR REDUCED PLANS 0 10 20 30 40 50 60 70 80 90 100

CU 04
EA 0120F1

DISREGARD PRINTS BEARING EARLIER REVISION DATES

REVISION DATES (PRELIMINARY STAGE ONLY): 05/31/01 04/08/02 07/01/02 12/19/02 11/13/05

SHEET 414R3 OF

FILE => I:\bb\04-012001\sas\contract plans and cco\cco\cco#172\1-original 11-12-10\dgn\agbwd07.dgn

100% PS&E

USERNAME => DWinrow DATE PLOTTED => 12 NOV 2010 TIME PLOTTED => 11:42:57