DIST.	COUNTY	ROUTE	KILOMETER POST TOTAL PROJECT	SHEET NO.	TOTAL SHEETS
04	SF	80	13.2/13.9	103755R2	1204

Caltrans Metric

REGISTERED ENGINEER - CIVIL

07-20-07

PLANS APPROVAL DATE

REGISTERED PROFESSIONAL ENGINEER Tien Hung Ho No. C 43990 Exp. 06/30/11 CIVIL STATE OF CALIFORNIA

The State of California or its officers or agents shall not be responsible for the accuracy or completeness of electronic copies of this plan sheet.

T.Y. LIN / MOFFATT & NICHOL
825 BATTERY STREET
SAN FRANCISCO, CA 94111

Caltrans now has a web site! To get to the web site, go to: http://www.dot.ca.gov

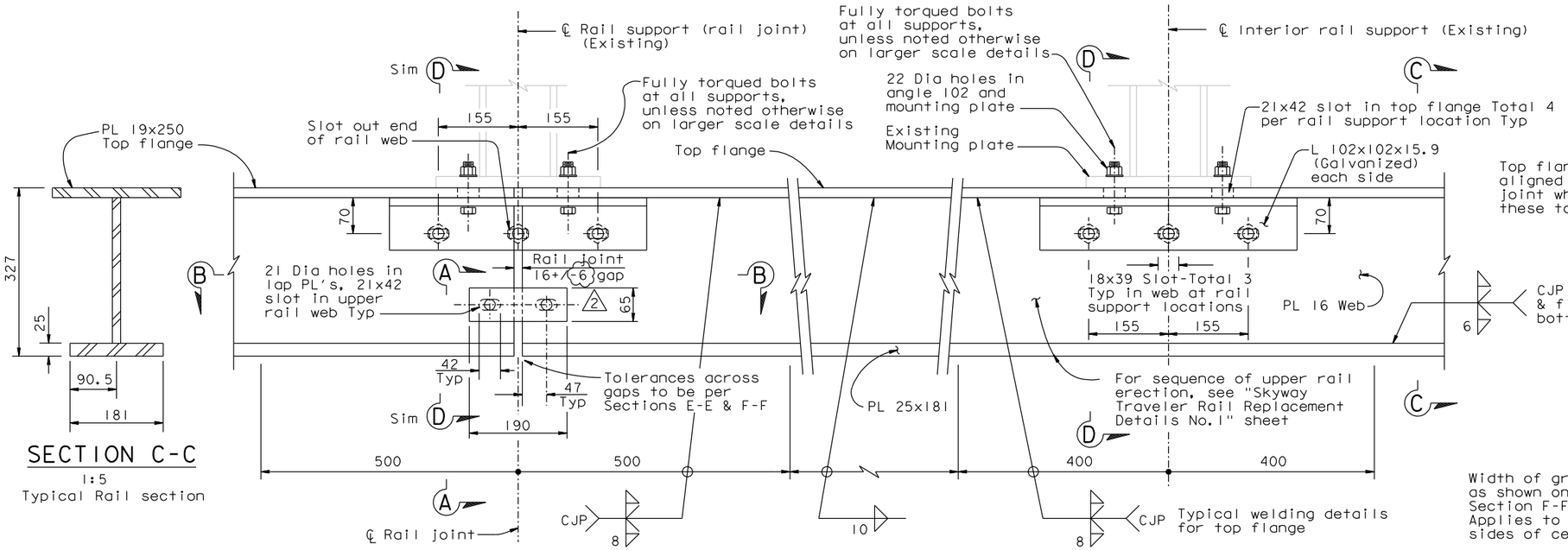

SECTION C-C
1:5
Typical Rail section

AT ENDS OF RAIL SECTIONS
Slot and hole sizes as for interior supports UNO

BETWEEN SUPPORTS

AT INTERIOR SUPPORTS

ELEVATION
1:5
(RAIL FABRICATION AND ATTACHMENT DETAILS)

Note: Details shown for slotted holes, rail joint and welding are typical for all upper rails.

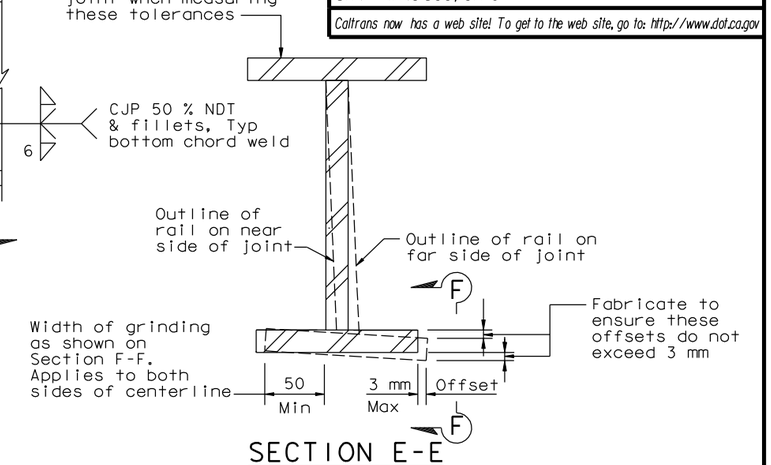

SECTION E-E
NTS

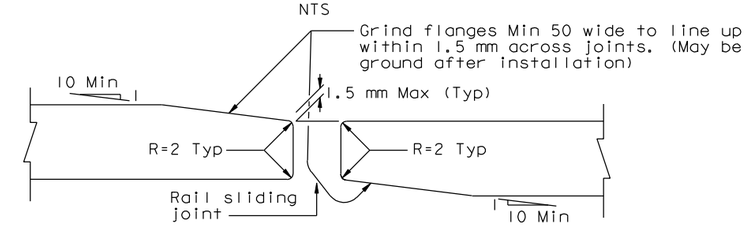

SECTION F-F
NTS
(Tolerances at rail sliding joints)

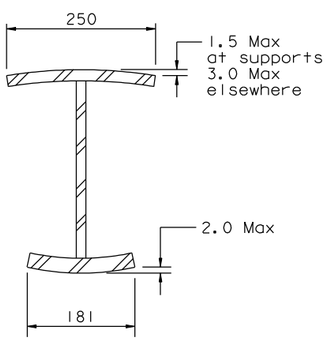

MAXIMUM ALLOWABLE FLANGE DEFORMATIONS
NTS

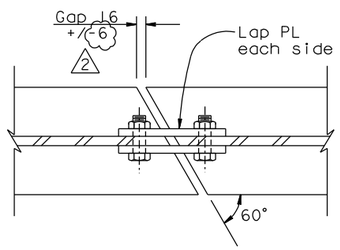

SECTION B-B
1:5
Note: Details of rail joint typical.

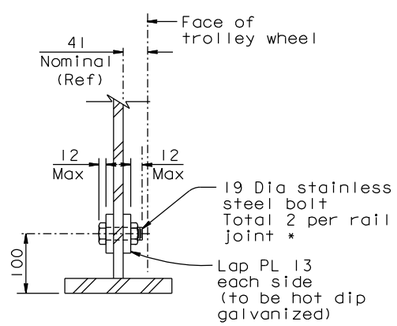

SECTION A-A
1:5

* Use low height bolt head and nut. Install nut with thread locking compound.

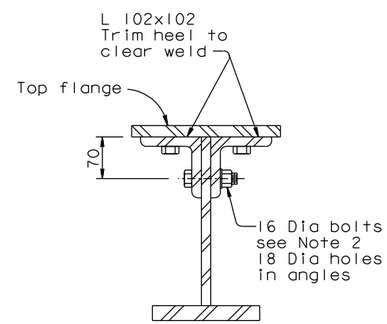

SECTION D-D
1:5

NOTES:

1. Rail and angles 102x102x15.9 and lap plates are to be hot dip galvanized.
2. 16 diameter bolts through angle legs
   - At interior supports : Single A325 nut, bolt to be fully tensioned.
   - At rail joint supports : A325 bolt, SAE J429 Grade 5 Heavy Hex locknut (TRI-LOC Top Lock Locknut) snug tightened to 12 ft-lb torque.
3. All rail material to be ASTM A572 Grade 50 (Fy=345 MPa).

REVISION 1 SUPERSEDES REVISION 0

CONTRACT CHANGE ORDER NO. _____
SHEET ____ OF ____

REQUESTS FOR INFORMATION NOT ADDRESSED IN THIS CCO REMAIN IN FORCE

MARK	DATE	DESCRIPTIONS	BY	CH'D	CCO#
2	09/15/10	TRAVELER RAIL TOLERANCES	MN	TH	168
1	05/18/09	TRAVELER RAIL MODIFICATIONS	TH	RM	24S0
0	07/20/07	RAIL CHANGE AND MISCELLANEOUS DETAILS	TH	RM	24

REVISIONS

R. Valizadeh/V. Toan/Y.L./W.L./F.C.
DESIGN OVERSIGHT
Ryan Valizadeh / Vong Toan / Y. Liu
SIGN OFF DATE 09/19/10

	BY	CHECKED
DESIGN	J. Otter	T. Ho
DETAILS	J. Otter	T. Ho
QUANTITIES	J. Otter	J. Duxbury

PREPARED FOR THE STATE OF CALIFORNIA DEPARTMENT OF TRANSPORTATION

ALL DIMENSIONS ARE IN MILLIMETERS UNLESS OTHERWISE SHOWN

R. Manzanarez
PROJECT ENGINEER

BRIDGE NO. 34-0006L/R
KILOMETER POST 13.2/13.9

SAN FRANCISCO OAKLAND BAY BRIDGE
EAST SPAN SEISMIC SAFETY PROJECT
SELF-ANCHORED SUSPENSION BRIDGE
(SUPERSTRUCTURE & TOWER)

SKYWAY TRAVELER RAIL REPLACEMENT DETAILS NO.5

Rev. Date: 5-18-98

ORIGINAL SCALE IN MILLIMETERS FOR REDUCED PLANS 0 10 20 30 40 50 60 70 80 90 100

CU 04
EA 04-012021

DISREGARD PRINTS BEARING EARLIER REVISION DATES 07/20/07

REVISION DATES (PRELIMINARY STAGE ONLY)

SHEET 620S5R2 OF

FILE => I:\bb\04-012001\sas\contract plans and cco\cco\cco*168\1-original 09-15-10\dgn\akrid05a.dgn

USERNAME => arivera DATE PLOTTED => 15 SEP 2010 TIME PLOTTED => 13:49:46

DIST.	COUNTY	ROUTE	KILOMETER POST TOTAL PROJECT	SHEET NO.	TOTAL SHEETS
04	SF	80	13.2/13.9	1120R4	1204

Caltrans Metric

George Baker
REGISTERED ENGINEER - CIVIL
12-6-04
PLANS APPROVAL DATE

REGISTERED PROFESSIONAL ENGINEER George S. Baker No. C 57112 Exp. 12/31/05 CIVIL STATE OF CALIFORNIA

The State of California or its officers or agents shall not be responsible for the accuracy or completeness of electronic copies of this plan sheet.

T.Y. LIN / MOFFATT & NICHOL
825 BATTERY STREET
SAN FRANCISCO, CA 94111

Caltrans now has a web site! To get to the web site, go to: http://www.dot.ca.gov

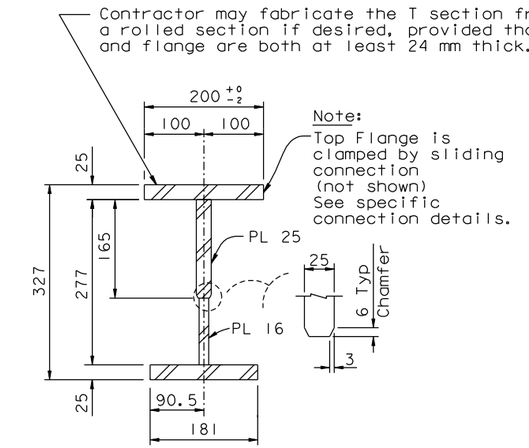

RAIL SECTION AT SLIDING JOINTS
SECTION A-A
1:5

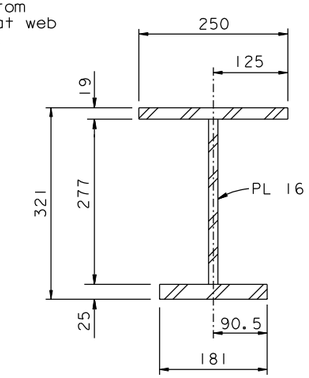

TYPICAL RAIL SECTION
SECTION B-B
1:5

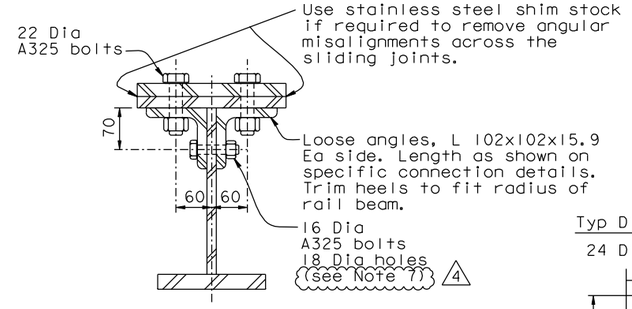

RAIL SECTION AT FIXED JOINTS
SECTION C-C
1:5

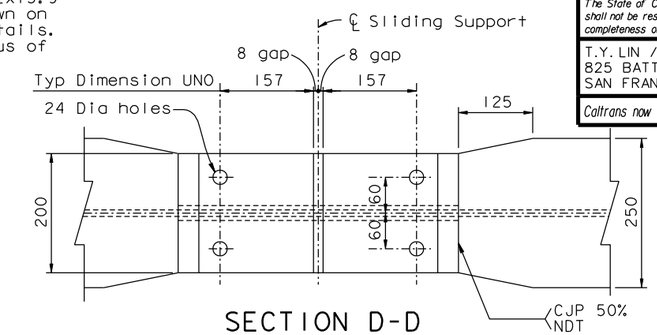

SECTION D-D
1:5

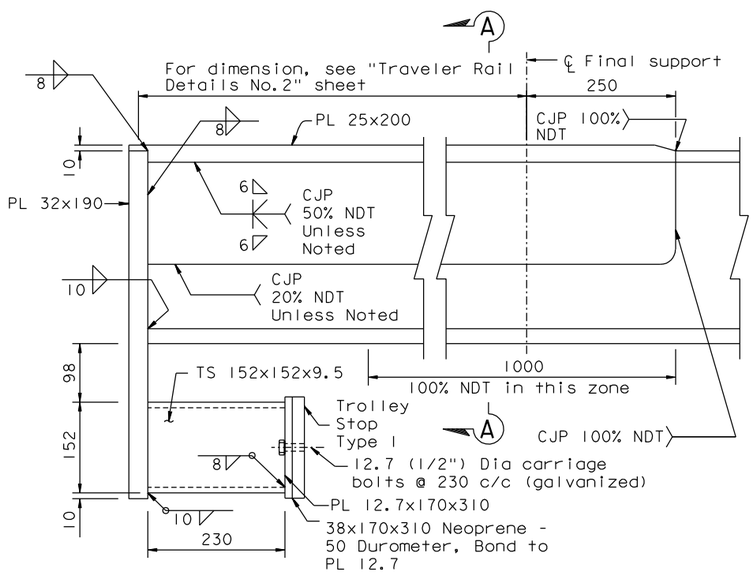

DETAIL AT RAIL ENDS

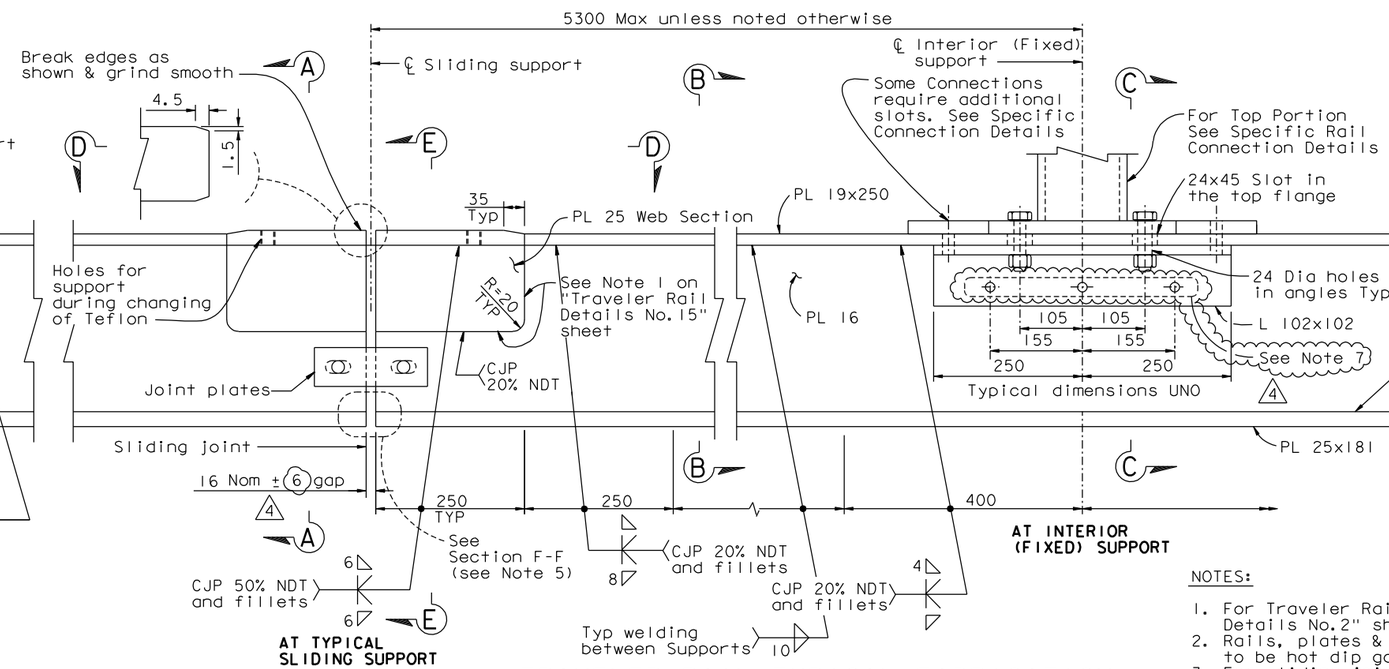

TRAVELER RAIL TYPICAL FABRICATION
1:5

NOTES:

1. For Traveler Rail notes, see "Traveler Rail Details No.2" sheet.
2. Rails, plates & Angles shown on this sheet to be hot dip galvanized.
3. For sliding joint detail, see "Traveler Rail Details No.2" sheet.
4. For trolley stop, see "Traveler Rail Details No.2" sheet.
5. For Sections E-E & F-F see "Traveler rail Details No.15" sheet.
6. For required tolerances on flange cuts see "Traveler Rail Details No.2" sheet.
7. At the Contractor's option, an 18x40 slotted hole may be used on the web of the traveler rail at the fixed supports. (4)

REGISTERED PROFESSIONAL ENGINEER Marwan N. Nader No. C 054426 Exp. 12/31/11 CIVIL STATE OF CALIFORNIA

FOR REVISIONS ONLY

REVISION 3 SUPERSEDES REVISIONS 1 & 2

CONTRACT CHANGE ORDER NO. _____
SHEET ____ OF ____

REQUESTS FOR INFORMATION NOT ADDRESSED IN THIS CCO REMAIN IN FORCE

MARK	DATE	DESCRIPTIONS	BY	CH'D	CCO#
4	09/15/10	TRAVELER RAIL TOLERANCES	MN	GB	168
3	05/18/09	TRAVELER RAIL MODIFICATIONS	MN	GB	24S0
2	07/20/07	RAIL CHANGE & MISCELLANEOUS DETAILS	GB	NV	24
1	08/04/06	TRAVELER RAILS	GB	NV	24

REVISIONS

R. Valizadeh/V. Toan/Y.L./W.L./F.C.
DESIGN OVERSIGHT
SIGN OFF DATE 09/15/10

	BY	CHECKED
DESIGN	J. Otter	G. Baker
DETAILS	J. Otter	M. Roberts
QUANTITIES	J. Otter	M. Roberts

PREPARED FOR THE STATE OF CALIFORNIA DEPARTMENT OF TRANSPORTATION

R. Manzanarez
PROJECT ENGINEER

ALL DIMENSIONS ARE IN MILLIMETERS UNLESS OTHERWISE SHOWN

BRIDGE NO. 34-0006L/R
KILOMETER POST 13.2/13.9

SAN FRANCISCO OAKLAND BAY BRIDGE
EAST SPAN SEISMIC SAFETY PROJECT
SELF-ANCHORED SUSPENSION BRIDGE
(SUPERSTRUCTURE & TOWER)

TRAVELER RAIL DETAILS NO. 1

Rev. Date: 5-18-98

ORIGINAL SCALE IN MILLIMETERS FOR REDUCED PLANS 0 10 20 30 40 50 60 70 80 90 100

CU 04
EA 0120F1

DISREGARD PRINTS BEARING EARLIER REVISION DATES
REVISION DATES (PRELIMINARY STAGE ONLY) 04/15/02 01/07/02 12/19/02

SHEET 703R4 OF

FILE => I:\bb\04-012001\sas\contract plans and cco\cco\cco#168\1-original 09-15-10\dgn\aktrvl12.dgn

USERNAME => arivera DATE PLOTTED => 15 SEP 2010 TIME PLOTTED => 13:51:27

100% PS&E

DIST.	COUNTY	ROUTE	KILOMETER POST TOTAL PROJECT	SHEET NO.	TOTAL SHEETS
04	SF	80	13.2/13.9	1121R4	1204

Caltrans Metric

George Baker
REGISTERED ENGINEER - CIVIL
12-6-04
PLANS APPROVAL DATE

REGISTERED PROFESSIONAL ENGINEER George S. Baker No. C 57112 Exp. 12/31/05 CIVIL STATE OF CALIFORNIA

The State of California or its officers or agents shall not be responsible for the accuracy or completeness of electronic copies of this plan sheet.

T.Y. LIN / MOFFATT & NICHOL
825 BATTERY STREET
SAN FRANCISCO, CA 94111

Caltrans now has a web site! To get to the web site, go to: http://www.dot.ca.gov

MAIN TRAVELERS - RAIL JOINT LOCATIONS GIVEN BY PANEL POINT (PP) NUMBERS

Rail Section No.	Sliding Connection	Fixed Connection	Sliding Connection
** 1	Near PP 8.5	PP 9	PP 10
2	PP 10	PP 11	PP 12
3	PP 12	PP 13	PP 14
4	PP 14	PP 15	PP 16
5	PP 16	PP 17	PP 18
6	PP 18	PP 19	PP 20
7	PP 20	PP 21	PP 22
8	PP 22	PP 23	PP 24
9	PP 24	PP 25	PP 26
10	PP 26	PP 27	PP 28
11	PP 28	PP 29	PP 30
12	PP 30	PP 31	PP 32
13	PP 32	PP 33	PP 34

Rail Section No.	Sliding Connection	Fixed Connection	Sliding Connection
14	PP 34	PP 35	PP 36
15	PP 36	PP 37	PP 38
16	PP 38	PP 39	PP 40
17	PP 40	PP 41	PP 42
18	PP 42	PP 43	PP 44
19	PP 44	PP 45	PP 46
20	PP 46	PP 47	PP 48
21	PP 48	PP 49	PP 50
22	PP 50	PP 51	PP 52
23	PP 52	PP 53	PP 54
24	PP 54	PP 55	PP 56
25	PP 56	PP 57	PP 58
26	PP 58	PP 59	PP 60

Rail Section No.	Sliding Connection	Fixed Connection	Sliding Connection
27	PP 60	PP 61	PP 62
28	PP 62	PP 63	PP 64
29	PP 64	PP 65	PP 66
30	PP 66	PP 67	PP 68
31	PP 68	PP 69	PP 70
32	PP 70	PP 71	PP 72
33	PP 72	PP 73	PP 74
34	PP 74	PP 75	PP 76
35	PP 76	PP 77	PP 78
36	PP 78	PP 79	PP 80
37	PP 80	PP 81	PP 82
38	PP 82	PP 83	PP 84
39	PP 84	PP 85	PP 86

Rail Section No.	Sliding Connection	Fixed Connection	Sliding Connection
40	PP 86	PP 87	PP 88
41	PP 88	PP 89	PP 90
42	PP 90	PP 91	PP 92
43	PP 92	PP 93	PP 94
44	PP 94	PP 95	PP 96
45	PP 96	PP 97	PP 98
46	PP 98	PP 99	PP 100
47	PP 100	PP 101	PP 102

Rail Section No.	Sliding Connection	Fixed Connection	Sliding Connection
48	PP 102	PP 103	PP 104
49	PP 104	PP 105	PP 106
50	PP 106	PP 107	PP 108
51	PP 108	PP 109 (K)	PP 110 (K)
52	PP 110 (K)	PP 111 (K)	PP 112
53	PP 112	PP 113	PP 114
54	PP 114	PP 115	PP 116
** 55	PP 116	PP 117	PP 118 & PP 118.35
** 56	PP 119.65 & PP 120	PP 121	PP 122
57	PP 122	none	PP 123
58	PP 123	PP 124	PP 125
59	PP 125	PP 126	PP 127
** 60	PP 127	PP 128	see schematic

K denotes kinked rail at these panel points.
See "Traveler Rail Details No. 15" sheet.

**Denotes Special Rail End Details

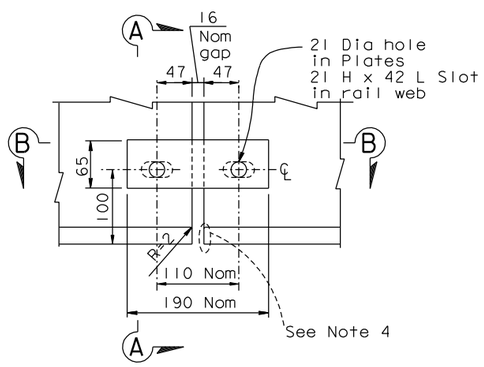

SLIDING JOINT DETAIL

1:4

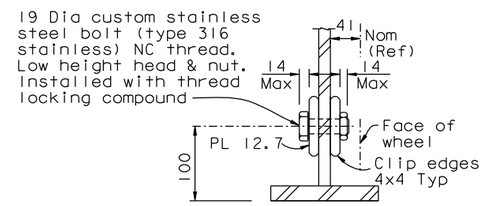

SECTION A-A

1:4

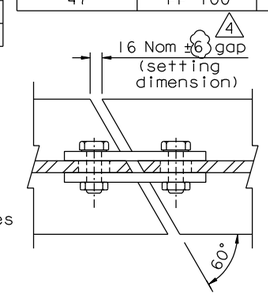

SECTION B-B

1:4

TRAVELER RAIL NOTES - SAS & E2/E3 TRAVELER RAILS

1. Rail material (flange plates & web plates) to be ASTM A572 or A709 grade 50 (Fy= 345 MPa).
2. Rail, boss plates & angles to be hot dip galvanized per specification.
3. The Nominal 16 mm gap between rail sections is to allow for slippage movement between rail and box in major seismic event.
4. Rail gaps to be set only after all dead load is in place on the structure. Tolerances across gaps to be per "Traveler Rail Details No. 15" sheet.
5. Rail to be fabricated in one to three span units as called out on this sheet.
6. Rail to be supported at panel points of the box structure at 5300 maximum c/c supports, unless noted otherwise.
7. Traveler rail and mounting on the Skyway structure is by Others except as noted below:
   - The inner (SAS) rail set (which crosses the Hinge A joint) is to be supplied and installed under this contract. It will be mounted to brackets on the Skyway structure which will be supplied and installed by Others.
   - The outer (transition span) rail set bolts are to be tightened under this contract after the connection of the transition span to the SAS and all dead load is in place on the structure.
8. Fabricator is to select a connection from types as appropriate to the geometry and to detail the connection within the permissible ranges of variation shown on the details.
9. For details of the various connection types, see "Traveler Rail Details" sheets.
10. Location of traveler rails is described on the "Traveler Operating Ranges" sheets.
11. All bolts to be ASTM A325 unless otherwise noted on the plans.
12. For special support details, see "Traveler Rail Details No. 14" sheet.

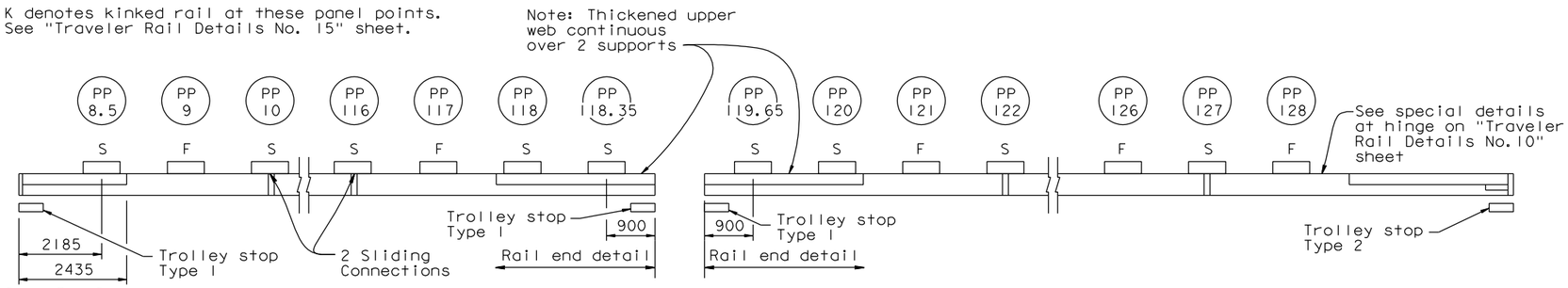

Rail End Detail

See also Traveler Operating Ranges Drawings for vertical deviations of rails.

RAIL SUPPORT SCHEMATIC

NTS

S denotes sliding connection
F denotes fixed connection

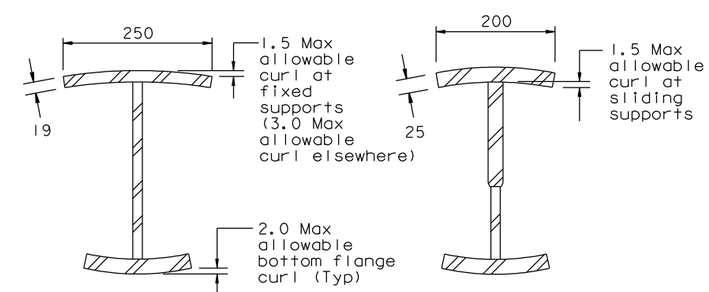

MAXIMUM ALLOWABLE FLANGE DEFORMATIONS

NTS

REGISTERED PROFESSIONAL ENGINEER Marwan N. Nader No. C 054426 Exp. 12/31/11 CIVIL STATE OF CALIFORNIA

FOR REVISIONS ONLY

REVISION 3 SUPERSEDES REVISIONS 1 & 2

CONTRACT CHANGE ORDER NO. _____
SHEET ___ OF ___

REQUESTS FOR INFORMATION NOT ADDRESSED IN THIS CCO REMAIN IN FORCE

MARK	DATE	DESCRIPTIONS	BY	CH'D	CCO#
4	09/15/10	TRAVELER RAIL TOLERANCES	MN	GB	168
3	06/05/09	TRAVELER RAIL MODIFICATIONS	MN	GB	2450
2	07/20/07	RAIL CHANGE & MISCELLANEOUS DETAILS	GB	NV	24
1	08/04/06	TRAVELER RAILS	GB	NV	24

REVISIONS

R. Valizadeh/V. Toan/Y.L./W.L./F.C.
DESIGN OVERSIGHT
Roya Valizadeh / Vong Toan / Y. Liu
SIGN OFF DATE 09/19/10

Rev. Date: 5-18-98

	BY	CHECKED
DESIGN	J. Otter	G. Baker
DETAILS	J. Otter	M. Roberts
QUANTITIES	J. Otter	M. Roberts

PREPARED FOR THE STATE OF CALIFORNIA DEPARTMENT OF TRANSPORTATION

ALL DIMENSIONS ARE IN MILLIMETERS UNLESS OTHERWISE SHOWN

R. Manzanarez
PROJECT ENGINEER

BRIDGE NO. 34-0006L/R
KILOMETER POST 13.2/13.9

SAN FRANCISCO OAKLAND BAY BRIDGE
EAST SPAN SEISMIC SAFETY PROJECT
SELF-ANCHORED SUSPENSION BRIDGE
(SUPERSTRUCTURE & TOWER)

TRAVELER RAIL DETAILS NO. 2

ORIGINAL SCALE IN MILLIMETERS FOR REDUCED PLANS 0 10 20 30 40 50 60 70 80 90 100

CU 04
EA 0120F1

DISREGARD PRINTS BEARING EARLIER REVISION DATES 04/18/02 01/07/02 12/19/02

REVISION DATES (PRELIMINARY STAGE ONLY)

SHEET 704R4 OF

FILE => I:\bb\04-01200I\sas\contract plans and cco\cco\cco#168\1-original 09-15-10\dgn\aktrvl13.dgn

USERNAME => ariverа DATE PLOTTED => 15 SEP 2010 TIME PLOTTED => 13:52:15

100% PS&E

DIST.	COUNTY	ROUTE	KILOMETER POST TOTAL PROJECT	SHEET NO.	TOTAL SHEETS
04	SF	80	13.2/13.9	1133SIR4	1204

Caltrans Metric

REGISTERED ENGINEER - MECHANICAL

07-20-07
PLANS APPROVAL DATE

REGISTERED PROFESSIONAL ENGINEER Marwan N. Nader No. C 054426 Exp. 12/31/11 CIVIL STATE OF CALIFORNIA

The State of California or its officers or agents shall not be responsible for the accuracy or completeness of electronic copies of this plan sheet.

T.Y. LIN / MOFFATT & NICHOL
825 BATTERY STREET
SAN FRANCISCO, CA 94111

Caltrans now has a web site! To get to the web site, go to: http://www.dot.ca.gov

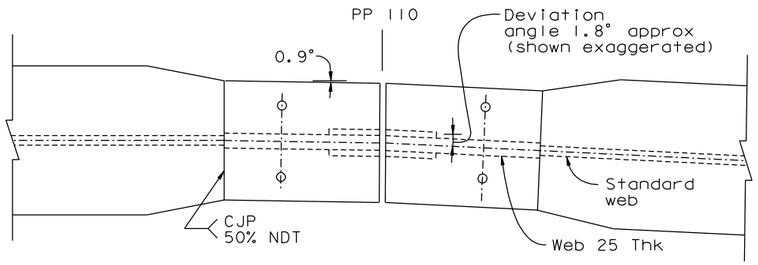

SECTION C-C

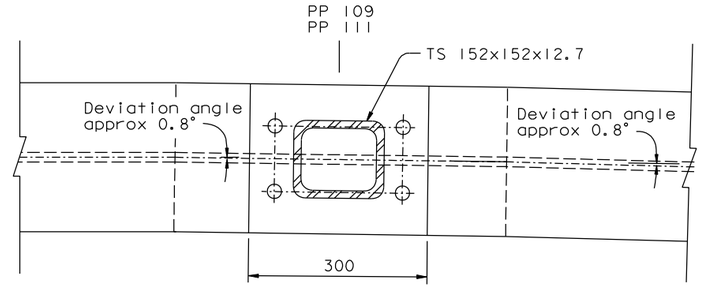

SECTION A-A

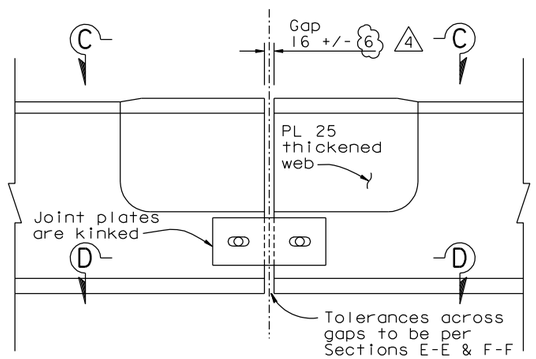

Connection details are standard (not shown for clarity)

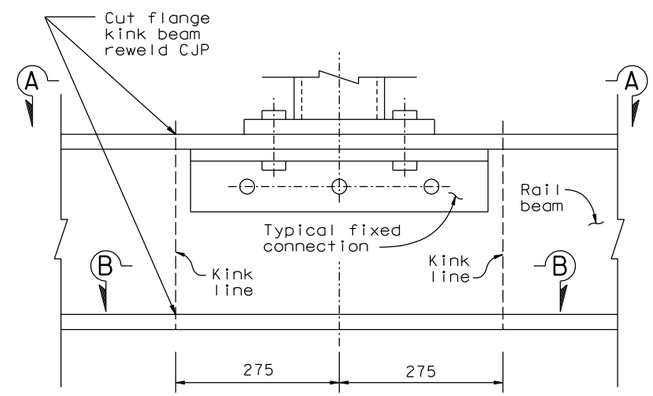

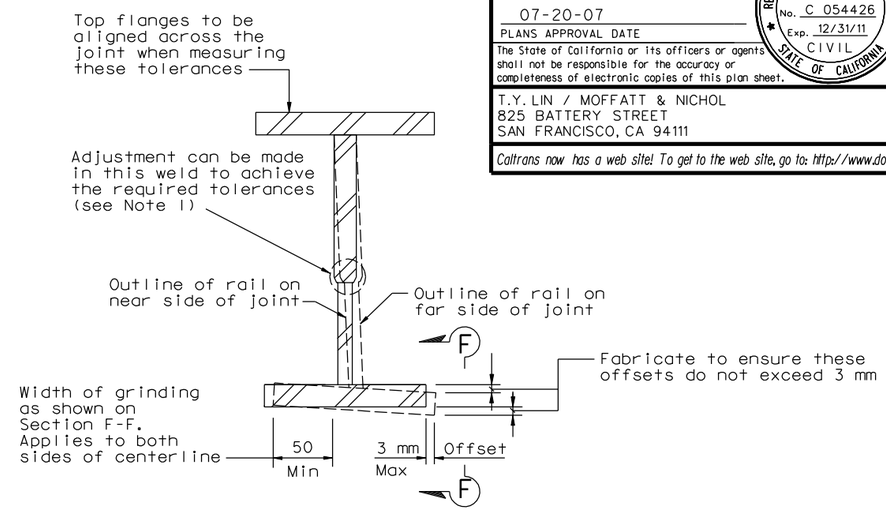

SECTION E-E

NTS

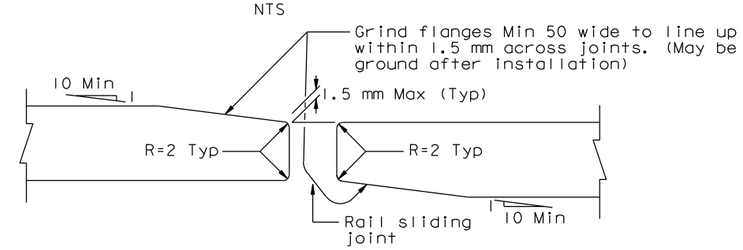

SECTION F-F (Tolerances at rail sliding joints)

NTS

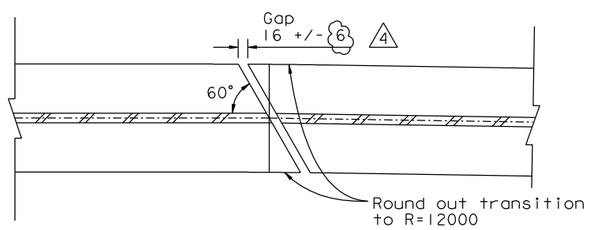

SECTION D-D

DETAIL AT PP 110

1:5

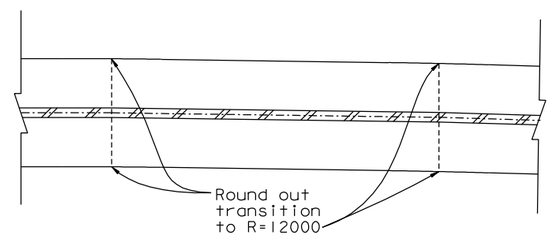

SECTION B-B

DETAIL AT PP 109 & 111

1:5

SPECIAL RAIL DETAILS AT DEVIATION

NOTES:

1. Adjust within the welds to the Tee section in order to achieve the required tolerances at the rail joints. Match mark for installation if necessary to achieve the tolerances shown after installation.

REVISION 2 SUPERSEDES REVISIONS 0 & 1

CONTRACT CHANGE ORDER NO. _____
SHEET ____ OF ____

REQUESTS FOR INFORMATION NOT ADDRESSED IN THIS CCO REMAIN IN FORCE

MARK	DATE	DESCRIPTIONS	BY	CH'D	CCO#
4	09/15/10	TRAVELER RAIL TOLERANCES	GB	MN	168
3	03/05/10	TRAVELER RAIL MODIFICATIONS	GB	MN	24S0
2	05/18/09	TRAVELER RAIL MODIFICATIONS	GB	MN	24S0
1	07/20/07	RAIL CHANGE AND MISCELLANEOUS DETAILS	GB	NV	24
0	08/04/06	TRAVELER RAILS	GB	NV	24

REVISIONS

R. Valizadeh/V. Toan/Y.L./W.L./F.C.
DESIGN OVERSIGHT
Roya Valizadeh / Vong Toan / Y. Liu
SIGN OFF DATE 09/19/10

	BY	CHECKED
DESIGN	J. Otter	G. Baker
DETAILS	J. Otter	G. Baker
QUANTITIES	J. Otter	N. Roberts

PREPARED FOR THE STATE OF CALIFORNIA DEPARTMENT OF TRANSPORTATION

ALL DIMENSIONS ARE IN MILLIMETERS UNLESS OTHERWISE SHOWN

R. Manzanarez
PROJECT ENGINEER

BRIDGE NO. 34-0006L/R
KILOMETER POST 13.2/13.9

SAN FRANCISCO OAKLAND BAY BRIDGE
EAST SPAN SEISMIC SAFETY PROJECT
SELF-ANCHORED SUSPENSION BRIDGE
(SUPERSTRUCTURE & TOWER)

TRAVELER RAIL DETAILS NO. 15

Rev. Date: 5-18-98

ORIGINAL SCALE IN MILLIMETERS FOR REDUCED PLANS 0 10 20 30 40 50 60 70 80 90 100

CU 04
EA 0120F1

DISREGARD PRINTS BEARING EARLIER REVISION DATES 07/20/07

REVISION DATES (PRELIMINARY STAGE ONLY)

SHEET 716SIR4 OF

FILE => I:\bb\04-012001\sas\contract plans and cco\cco\cco#168\1-original 09-15-10\dgn\aktrv124a.dgn

100% PS&E

USERNAME => arivera DATE PLOTTED => 15 SEP 2010 TIME PLOTTED => 13:52:55

DIST.	COUNTY	ROUTE	KILOMETER POST TOTAL PROJECT	SHEET NO.	TOTAL SHEETS
04	SF	80	13.2/13.9	1153R5	1204

Caltrans Metric

REGISTERED ENGINEER - CIVIL

12-6-04
PLANS APPROVAL DATE

REGISTERED PROFESSIONAL ENGINEER Rafael Manzanarez No. C 36842 Exp. 6/30/12 CIVIL STATE OF CALIFORNIA

The State of California or its officers or agents shall not be responsible for the accuracy or completeness of electronic copies of this plan sheet.

T.Y. LIN / MOFFATT & NICHOL
825 BATTERY STREET
SAN FRANCISCO, CA 94111

Caltrans now has a web site! To get to the web site, go to: http://www.dot.ca.gov

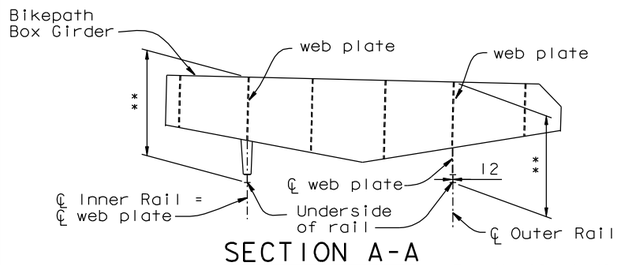

SECTION A-A
1:50

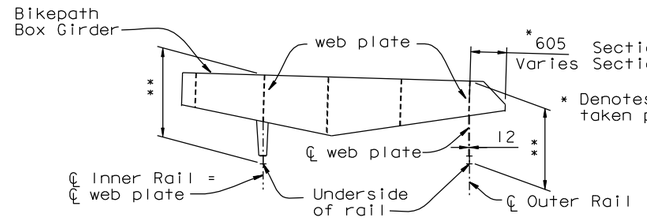

SECTION B-B, BX-BX
1:50

**For Vertical dimension to underside of rail, see "Section Along Outer Rail" on this sheet

NOTES:

1. Box girder web plates to be located as shown to support the traveler rails.
2. For Rail Types 1 and 2, see "E2/E3 Bikepath Traveler Rails-02" sheet.
3. For bikepath padeye detail, see "Girder Access Details No.10" sheet.
4. Contractor to field verify rail locations at end of Skyway and to adjust locations of rail on SAS if necessary to line up with Skyway rails.

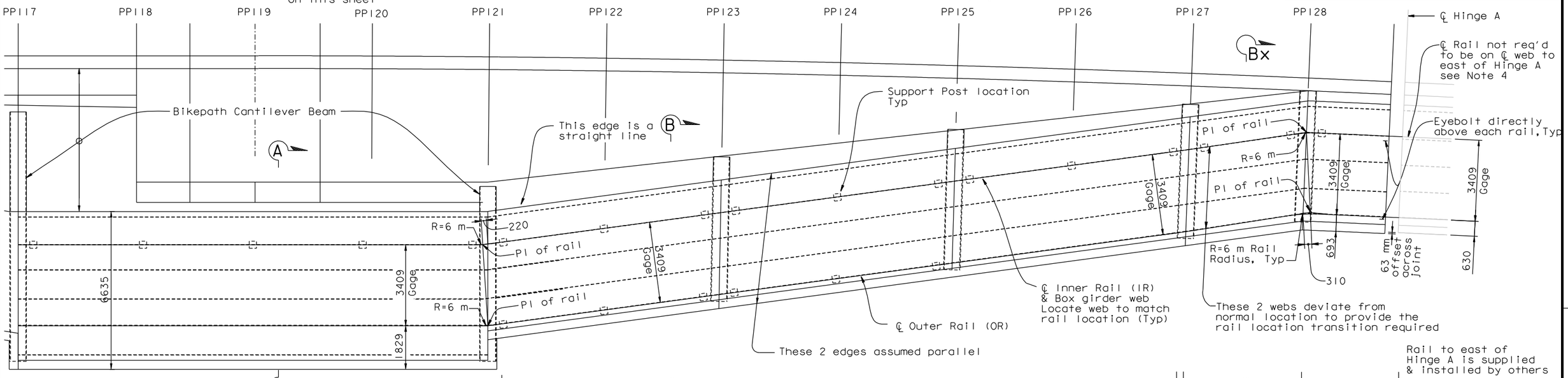

LAYOUT PLAN
1:80

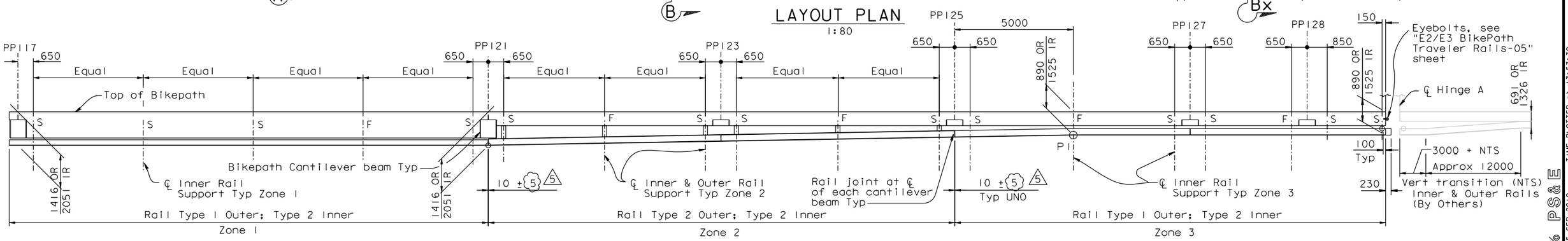

SECTION ALONG OUTER RAIL
1:80

OR Denotes Outer Rail
IR Denotes Inner Rail
F Denotes Fixed Connection
S Denotes Sliding Connection

REQUESTS FOR INFORMATION NOT ADDRESSED IN THIS CCO REMAIN IN FORCE

MARK	DATE	DESCRIPTIONS	BY	CH'D	CCO#
5	09/15/10	TRAVELER RAIL TOLERANCES	MN	RM	168
4	08/20/10	BIKEPATH DETAILS	CC	RM	99
3	06/05/09	TRAVELER RAIL MODIFICATIONS	RM	NV	24S0
2	07/20/07	RAIL CHANGE & MISCELLANEOUS DETAILS	RM	NV	24
1	08/04/06	TRAVELER RAILS	RM	NV	24

REVISIONS

REVISION 3 SUPERSEDES REVISIONS 1 & 2

CONTRACT CHANGE ORDER NO. ____
SHEET ____ OF ____

ALL DIMENSIONS ARE IN MILLIMETERS UNLESS OTHERWISE SHOWN

R. Valizadeh/V. Toan/Y.L./W.L./F.C.
DESIGN OVERSIGHT
SIGN OFF DATE 09/15/10

	BY	CHECKED
DESIGN	J. Otter	R. Manzanarez
DETAILS	J. Otter	J. Leventini
QUANTITIES	J. Otter	J. Leventini

PREPARED FOR THE STATE OF CALIFORNIA DEPARTMENT OF TRANSPORTATION

R. Manzanarez
PROJECT ENGINEER

BRIDGE NO. 34-0006L/R
KILOMETER POST 13.2/13.9

SAN FRANCISCO OAKLAND BAY BRIDGE
EAST SPAN SEISMIC SAFETY PROJECT
SELF-ANCHORED SUSPENSION BRIDGE
(SUPERSTRUCTURE & TOWER)

E2/E3 BIKEPATH TRAVELER RAILS-01

Rev. Date: 5-18-98

ORIGINAL SCALE IN MILLIMETERS FOR REDUCED PLANS 0 10 20 30 40 50 60 70 80 90 100

CU 04
EA 0120F1

DISREGARD PRINTS BEARING EARLIER REVISION DATES

REVISION DATES (PRELIMINARY STAGE ONLY) 04/18/02 01/07/02 12/19/02

SHEET 736R5 OF

FILE => I:\bb\04-012001\sas\contract plans and cco\cco\cco#168\1-original 09-15-10\dgn\aktrv134.dgn

100% PS&E

USERNAME => arivera DATE PLOTTED => 15 SEP 2010 TIME PLOTTED => 13:53:30

DIST.	COUNTY	ROUTE	KILOMETER POST TOTAL PROJECT	SHEET NO.	TOTAL SHEETS
04	SF	80	13.2/13.9	1154R6	1204

Caltrans Metric

REGISTERED ENGINEER - CIVIL

12-6-04
PLANS APPROVAL DATE

PROFESSIONAL ENGINEER — Rafael Manzanarez — No. C 36842 — Exp. 6/30/12 — CIVIL — STATE OF CALIFORNIA

The State of California or its officers or agents shall not be responsible for the accuracy or completeness of electronic copies of this plan sheet.

T.Y. LIN / MOFFATT & NICHOL
825 BATTERY STREET
SAN FRANCISCO, CA 94111

Caltrans now has a web site! To get to the web site, go to: http://www.dot.ca.gov

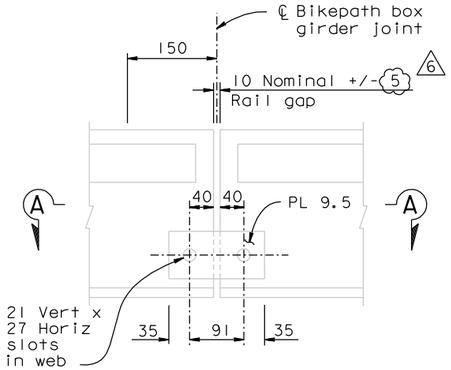

ELEVATION
Rail Type 1 on Skyway
(By Others)

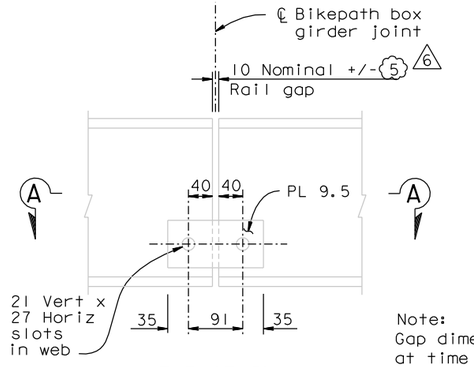

ELEVATION
Rail Type 2 on Skyway
(By Others)

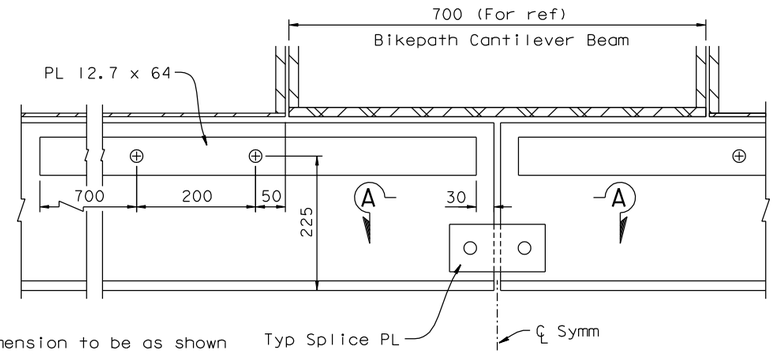

Note:
Gap dimension to be as shown at time of installation.
Gap will vary +/- 3 mm per 8000 span due to flexure etc. of steel superstructure. Set gap as shown unless noted otherwise in rail layouts.

RAIL SPLICE
1:5

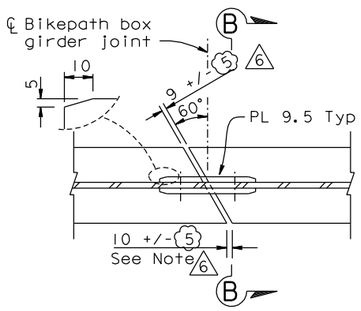

SECTION A-A
1:5

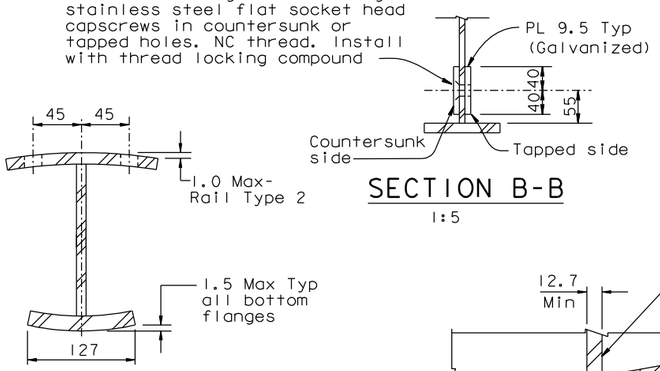

SECTION B-B
1:5

MAXIMUM ALLOWABLE FLANGE DEFORMATIONS
NTS

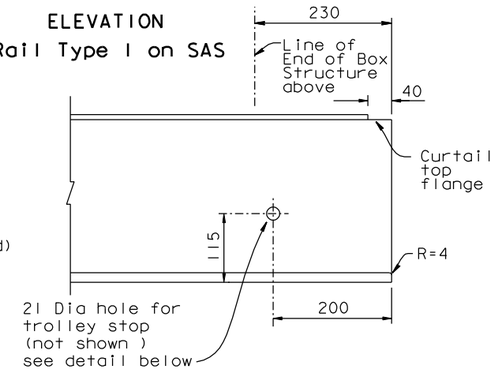

ELEVATION
Rail Type 1 on SAS

RAIL TYPE 2 AT HINGE A
1:5

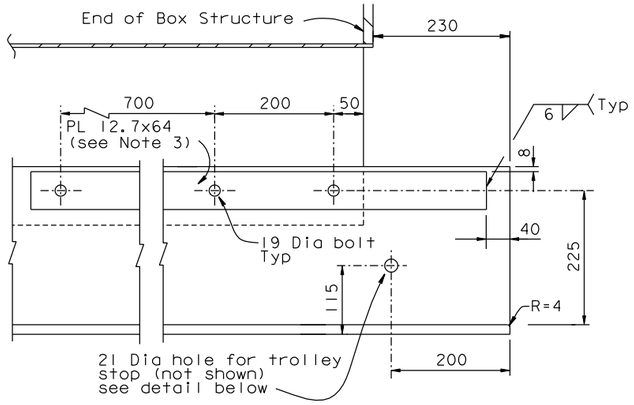

RAIL TYPE 1 AT HINGE A
1:5

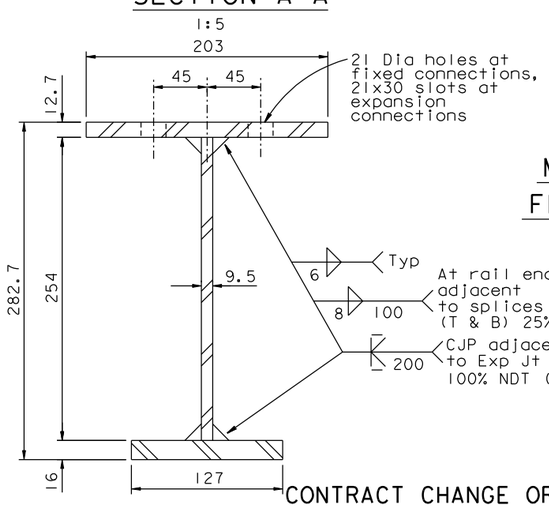

RAIL TYPE 2
1:2.5

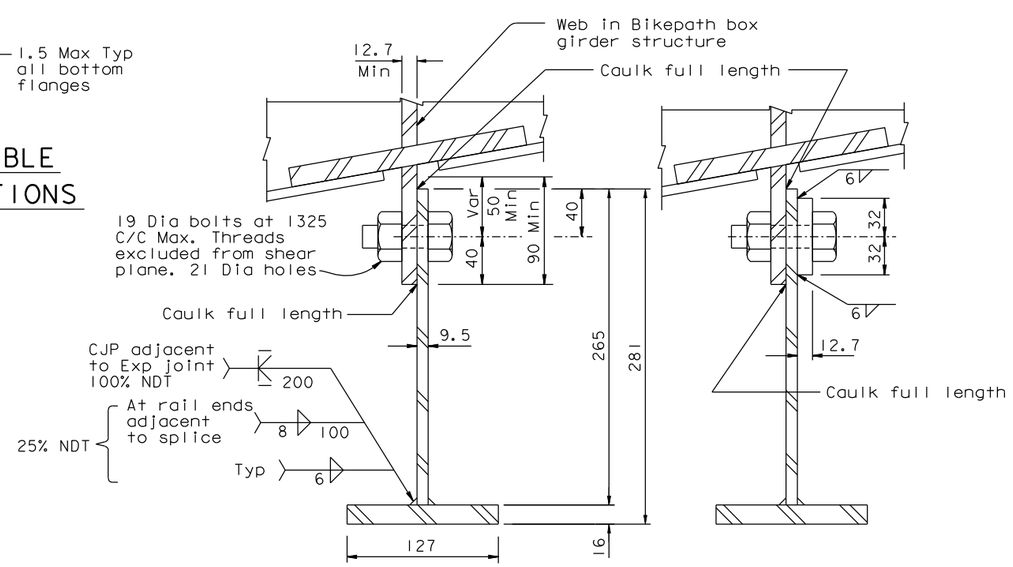

TYP SECTION

SECTION WITH PL 12.7
(See Note 3)

RAIL TYPE 1
1:2.5

ALL DIMENSIONS ARE IN MILLIMETERS UNLESS OTHERWISE SHOWN

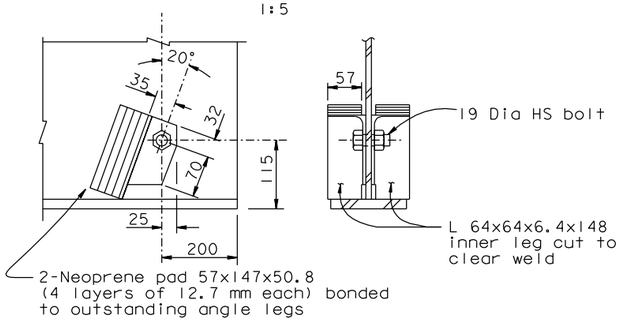

TROLLEY STOP DETAIL
1:5

Note: Install trolley stops at both sides of each expansion joint and at rail terminations

NOTES:

1. Rail & other noted material to be hot dipped galvanized.
2. Materials -
   Rails - All steel - ASTM A572 Grade 50. (Fy=345 MPa)
   - All other plates and shapes - ASTM A572 Grade 40.
   - (Fy = 275) Min
3. At the outer rail transition curves at PP121 and PP128, the PL 12.7x64 shall be increased to PL 16x64.

CONTRACT CHANGE ORDER NO. ____
SHEET ____ OF ____

REQUESTS FOR INFORMATION NOT ADDRESSED IN THIS CCO REMAIN IN FORCE

MARK	DATE	DESCRIPTIONS	BY	CH'D	CCO#
6	09/15/10	TRAVELER RAIL TOLERANCES	MN	RM	168
5	08/20/10	BIKEPATH DETAILS	RM	CC	99
4	09/25/09	BIKEPATH DETAILS	RM	HT	99
3	05/18/09	TRAVELER RAIL MODIFICATIONS	RM	NV	24S0
2	07/20/07	RAIL CHANGE & MISCELLANEOUS DETAILS	RM	NV	24
1	08/04/06	TRAVELER RAILS	RM	NV	24

REVISIONS

R. Valizadeh/V. Toan/Y.L./W.L./F.C.
DESIGN OVERSIGHT
Rezi Valizadeh / Vong Toan / Y. Liu
SIGN OFF DATE 09/19/10

Rev. Date: 5-18-98

	BY	CHECKED
DESIGN	J. Otter	R. Manzanarez
DETAILS	J. Otter	J. Leventini
QUANTITIES	J. Otter	J. Leventini

PREPARED FOR THE STATE OF CALIFORNIA DEPARTMENT OF TRANSPORTATION

R. Manzanarez
PROJECT ENGINEER

BRIDGE NO. 34-0006L/R
KILOMETER POST 13.2/13.9

SAN FRANCISCO OAKLAND BAY BRIDGE
EAST SPAN SEISMIC SAFETY PROJECT
SELF-ANCHORED SUSPENSION BRIDGE
(SUPERSTRUCTURE & TOWER)

E2/E3 BIKEPATH TRAVELER RAILS-02

ORIGINAL SCALE IN MILLIMETERS FOR REDUCED PLANS 0 10 20 30 40 50 60 70 80 90 100

CU 04
EA 0120F1

DISREGARD PRINTS BEARING EARLIER REVISION DATES

REVISION DATES (PRELIMINARY STAGE ONLY) 04/15/02 01/07/02 12/19/02

SHEET 737R6 OF

FILE => I:\bb\04-01200\sas\contract plans and cco\cco\cco#168\1-original 09-15-10\dgn\aktrv135.dgn

USERNAME => orivera DATE PLOTTED => 15 SEP 2010 TIME PLOTTED => 13:54:26

100% PS&E