| DIST. | COUNTY | ROUTE | KILOMETER POST TOTAL PROJECT | SHEET NO. | TOTAL SHEETS |
|---|---|---|---|---|---|
| 04 | SF | 80 | 13.2/13.9 | 103755R2 | 1204 |

Caltrans Metric

REGISTERED ENGINEER - CIVIL

07-20-07

PLANS APPROVAL DATE

REGISTERED PROFESSIONAL ENGINEER Tien Hung Ho No. C 43990 Exp. 06/30/11 CIVIL STATE OF CALIFORNIA

The State of California or its officers or agents shall not be responsible for the accuracy or completeness of electronic copies of this plan sheet.

T.Y. LIN / MOFFATT & NICHOL
825 BATTERY STREET
SAN FRANCISCO, CA 94111

Caltrans now has a web site! To get to the web site, go to: http://www.dot.ca.gov

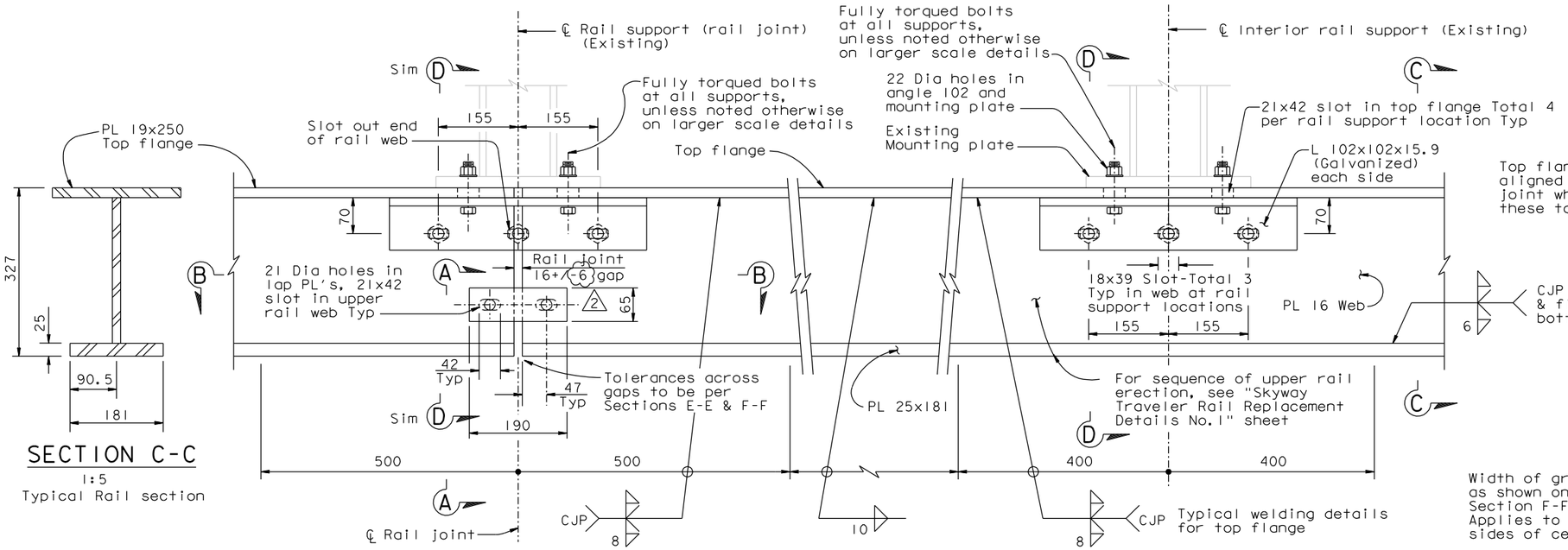


SECTION C-C
1:5
Typical Rail section

AT ENDS OF RAIL SECTIONS
Slot and hole sizes as for interior supports UNO

BETWEEN SUPPORTS

AT INTERIOR SUPPORTS

ELEVATION
1:5
(RAIL FABRICATION AND ATTACHMENT DETAILS)

Note: Details shown for slotted holes, rail joint and welding are typical for all upper rails.

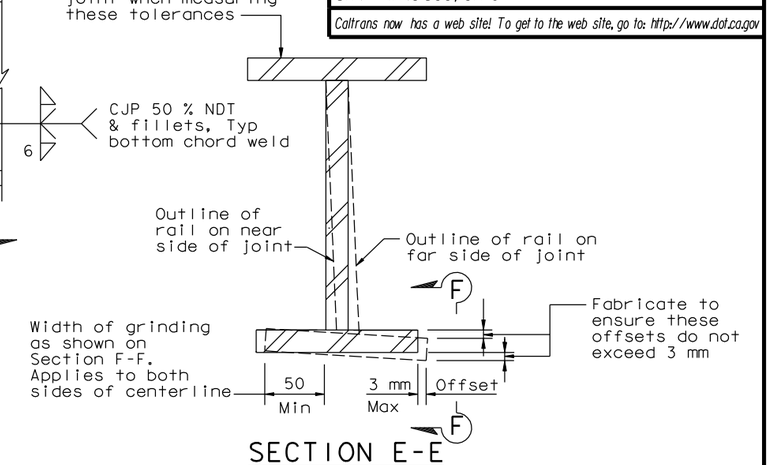


SECTION E-E
NTS

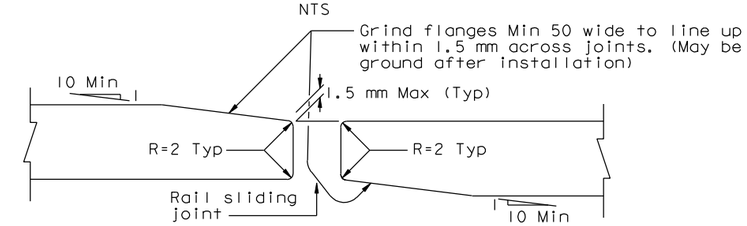


SECTION F-F
NTS
(Tolerances at rail sliding joints)

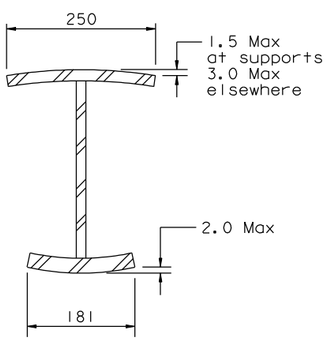


MAXIMUM ALLOWABLE FLANGE DEFORMATIONS
NTS

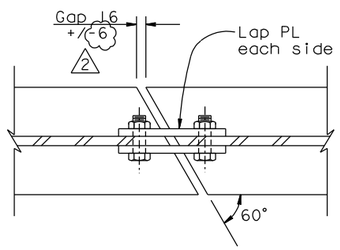


SECTION B-B
1:5
Note: Details of rail joint typical.

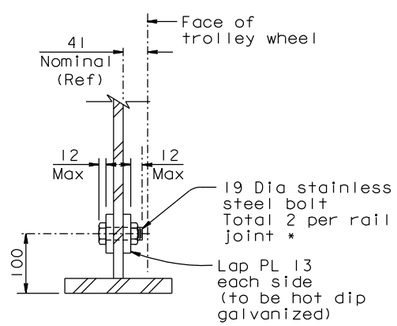


SECTION A-A
1:5

* Use low height bolt head and nut. Install nut with thread locking compound.

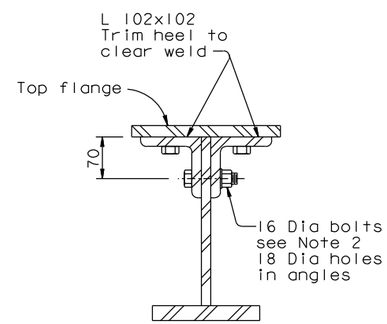


SECTION D-D
1:5

NOTES:

1. Rail and angles 102x102x15.9 and lap plates are to be hot dip galvanized.
2. 16 diameter bolts through angle legs
   - At interior supports : Single A325 nut, bolt to be fully tensioned.
   - At rail joint supports : A325 bolt, SAE J429 Grade 5 Heavy Hex locknut (TRI-LOC Top Lock Locknut) snug tightened to 12 ft-lb torque.
3. All rail material to be ASTM A572 Grade 50 (Fy=345 MPa).

REVISION 1 SUPERSEDES REVISION 0

CONTRACT CHANGE ORDER NO. _____
SHEET ____ OF ____

REQUESTS FOR INFORMATION NOT ADDRESSED IN THIS CCO REMAIN IN FORCE

| MARK | DATE | DESCRIPTIONS | BY | CH'D | CCO# |
|---|---|---|---|---|---|
| 2 | 09/15/10 | TRAVELER RAIL TOLERANCES | MN | TH | 168 |
| 1 | 05/18/09 | TRAVELER RAIL MODIFICATIONS | TH | RM | 24S0 |
| 0 | 07/20/07 | RAIL CHANGE AND MISCELLANEOUS DETAILS | TH | RM | 24 |

REVISIONS

R. Valizadeh/V. Toan/Y.L./W.L./F.C.
DESIGN OVERSIGHT
Ryan Valizadeh / Vong Toan / Y. Liu
SIGN OFF DATE 09/19/10

| | BY | CHECKED |
|---|---|---|
| DESIGN | J. Otter | T. Ho |
| DETAILS | J. Otter | T. Ho |
| QUANTITIES | J. Otter | J. Duxbury |

PREPARED FOR THE STATE OF CALIFORNIA DEPARTMENT OF TRANSPORTATION

ALL DIMENSIONS ARE IN MILLIMETERS UNLESS OTHERWISE SHOWN

R. Manzanarez
PROJECT ENGINEER

BRIDGE NO. 34-0006L/R
KILOMETER POST 13.2/13.9

SAN FRANCISCO OAKLAND BAY BRIDGE
EAST SPAN SEISMIC SAFETY PROJECT
SELF-ANCHORED SUSPENSION BRIDGE
(SUPERSTRUCTURE & TOWER)

# SKYWAY TRAVELER RAIL REPLACEMENT DETAILS NO.5

Rev. Date: 5-18-98

ORIGINAL SCALE IN MILLIMETERS FOR REDUCED PLANS 0 10 20 30 40 50 60 70 80 90 100

CU 04
EA 04-012021

DISREGARD PRINTS BEARING EARLIER REVISION DATES 07/20/07

REVISION DATES (PRELIMINARY STAGE ONLY)

SHEET 620S5R2 OF

FILE => I:\bb\04-012001\sas\contract plans and cco\cco\cco*168\1-original 09-15-10\dgn\akrid05a.dgn

USERNAME => arivera DATE PLOTTED => 15 SEP 2010 TIME PLOTTED => 13:49:46