DIST	COUNTY	ROUTE	KILOMETER POST TOTAL PROJECT	SHEET No	TOTAL SHEETS
04	SF	80	13.2/13.9	247 R4	1204

REGISTERED ELECTRICAL ENGINEER 12/19/02 DATE

12-6-04
PLANS APPROVAL DATE

REGISTERED PROFESSIONAL ENGINEER JENS ERLINGSSON No. 8249 Exp. 9/30/06 ELECTRICAL STATE OF CALIFORNIA

PB POWER, Inc.
A Parsons Brinckerhoff Company
303 Second St., Suite 700N
San Francisco, CA 94107-1317

The State of California or its officers or agents shall not be responsible for the accuracy or completeness of electronic copies of this plan sheet.

Caltrans now has a web site! To get to the web site, go to http://www.dot.ca.gov

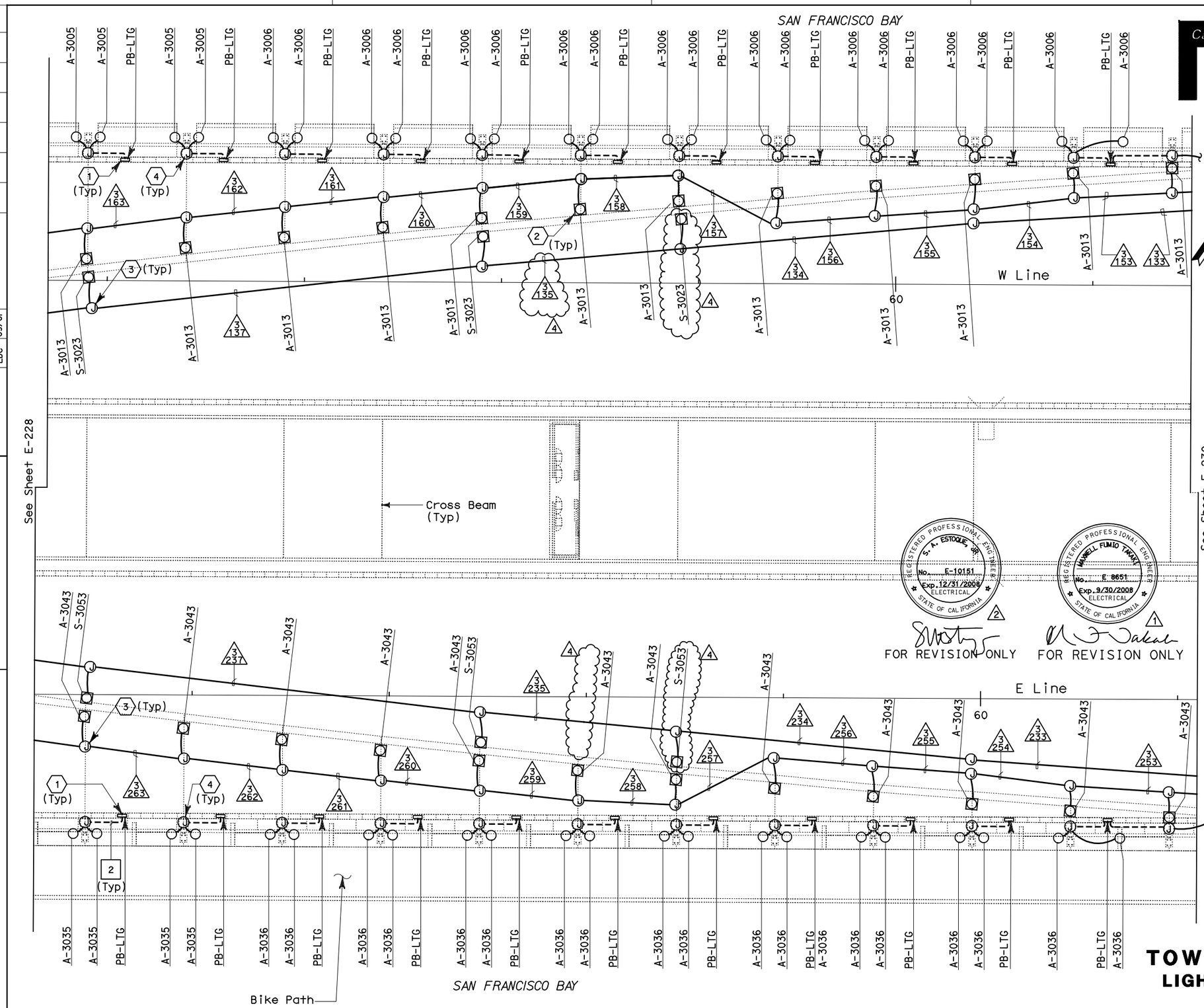

SHEET NOTES:

1. For additional conduits and actual location from PB-LTG, see SAS Superstructure Roadway Plans: E-49 (Westbound) E-138 (Eastbound)
2. For tower and suspension cable lighting mounting details, see sheets E-251 and E-257 to E-261.
3. Type PB-1F junction box is mounted on main suspension cable.
4. Type PB-1B junction box is mounted on suspender brackets.
5. Deleted.

NOTES:

1. For tower and suspension cable lighting schedule see sheets E-271 to E-272.
2. For pull box schedule see sheets E-83 & E-169.
3. For 480 V main suspension cable lighting wiring diagrams, see sheets E-236 through E-240 and E-243 through E-247.
4. For circuit and conduit/cable tray schedules, see sheets starting at E-401.
5. For other related work not shown on this sheet, see Electrical Special Provisions.

REGISTERED PROFESSIONAL ENGINEER S. A. ESTOQUE, JR. No. E-10151 Exp. 12/31/2008 ELECTRICAL STATE OF CALIFORNIA

REGISTERED PROFESSIONAL ENGINEER MAXWELL FUMIO TAKATA No. E 8651 Exp. 9/30/2008 ELECTRICAL STATE OF CALIFORNIA

REGISTERED PROFESSIONAL ENGINEER DAVID H. OTO No. 10699 Exp. 06/30/2013 ELECTRICAL STATE OF CALIFORNIA

REGISTERED PROFESSIONAL ENGINEER FADI WALIEDDINE No. 11465 Exp. 12/31/2009 ELECTRICAL STATE OF CALIFORNIA

REQUEST FOR INFORMATION NOT ADDRESSED IN THIS CCO REMAIN IN FORCE

MARK	DATE	DESCRIPTIONS	BY	CH'D	CCO#
4	03/02/12	ADDITIONAL CABLE LEDs	RR	RG	167S2
3	10/10/08	LIGHTING REVISIONS	JH	RG FW	43
2	09/24/08	CABLE ELECTRICAL	RG	SE	72
1	02/19/08	ELECTRICAL MODIFICATIONS	MP EL	RR	42

REVISIONS

CONTRACT CHANGE ORDER NO._____
SHEET _____ OF _____

TOWER AND SUSPENSION CABLE LIGHTING AND ELECTRICAL SYSTEMS

SCALE 1:200

SAS SUPERSTRUCTURE

THIS PLAN IS ACCURATE FOR ELECTRICAL WORK ONLY.

ALL DIMENSIONS ARE IN MILLIMETERS UNLESS OTHERWISE SHOWN

E-229

STATE OF CALIFORNIA - DEPARTMENT OF TRANSPORTATION

DESIGN OVERSIGHT: BEHZAD GOLEMOHAMMADI

CALCULATED/DESIGNED BY	JP	DATE 08/01	REVISED BY
CHECKED BY	EDC	09/01	DATE REVISED

FOR REDUCED PLANS ORIGINAL SCALE IS IN MILLIMETERS 0 20 40 60 80

DGN FILE =>04-0120f1_0247R04.dgn
USERNAME =>llorico

CU 04251 EA 0120F1

LAST REVISION 03-02-12
DATE PLOTTED => 05-MAR-2012
TIME PLOTTED => 15:12

DIST	COUNTY	ROUTE	KILOMETER POST TOTAL PROJECT	SHEET No	TOTAL SHEETS
04	SF	80	13.2/13.9	250 R3	1204

Caltrans Metric

REGISTERED ELECTRICAL ENGINEER — 12/19/02 DATE

12-6-04
PLANS APPROVAL DATE

REGISTERED PROFESSIONAL ENGINEER — JENS ERLINGSSON No. 8249 Exp. 9/30/06 ELECTRICAL — STATE OF CALIFORNIA

PB POWER, Inc.
A Parsons Brinckerhoff Company
303 Second St., Suite 700N
San Francisco, CA 94107-1317

The State of California or its officers or agents shall not be responsible for the accuracy or completeness of electronic copies of this plan sheet.

Caltrans now has a web site! To get to the web site, go to http://www.dot.ca.gov

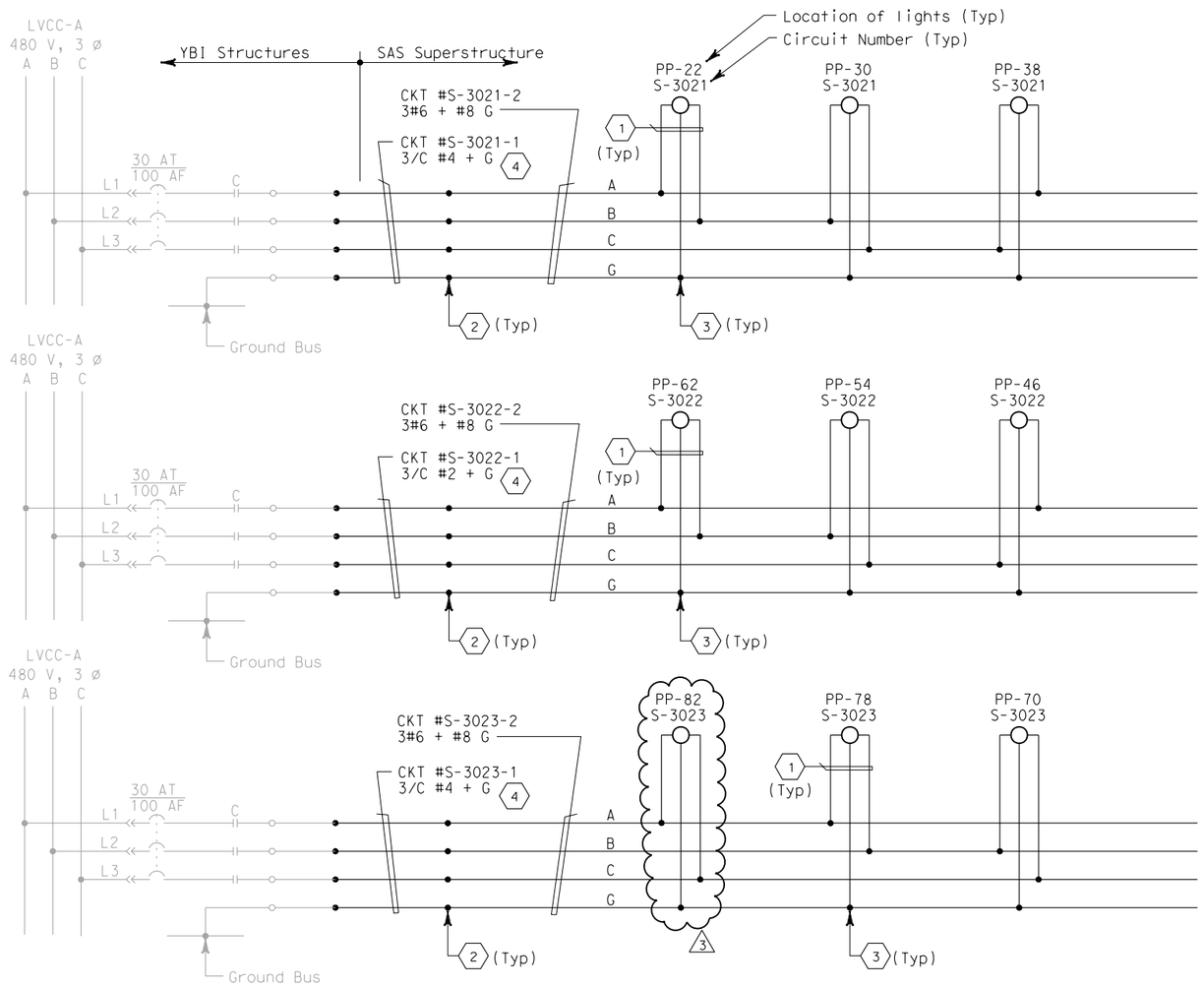

480 V ROADWAY LIGHTING - WB

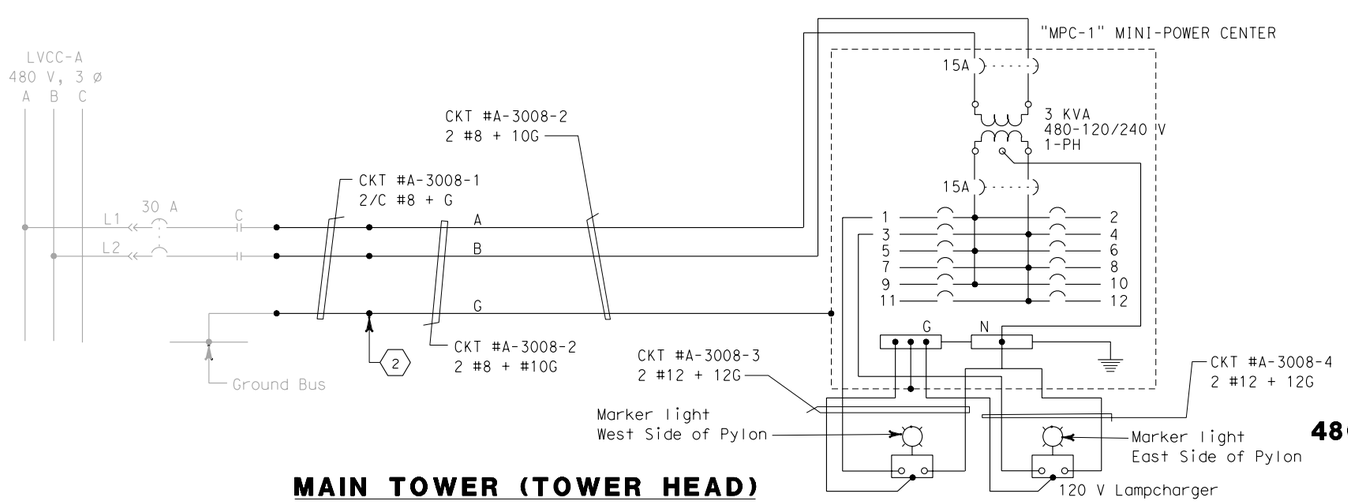

MAIN TOWER (TOWER HEAD)

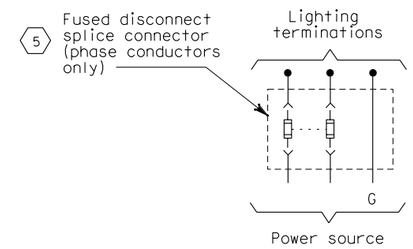

DETAIL-1

(TYP. FOR EACH LIGHT FIXTURE)

REGISTERED PROFESSIONAL ENGINEER — DAVID H. OTO No. 10699 Exp. 06/30/2013 ELECTRICAL — STATE OF CALIFORNIA — 3

FOR REVISION ONLY

REGISTERED PROFESSIONAL ENGINEER — FADI WALIEDDINE No. 11465 Exp. 12/31/2009 ELECTRICAL — STATE OF CALIFORNIA — 2

FOR REVISION ONLY

REGISTERED PROFESSIONAL ENGINEER — S. A. ESTOQUE, JR. No. E-10151 Exp. 12/31/2008 ELECTRICAL — STATE OF CALIFORNIA — 1

FOR REVISION ONLY

SHEET NOTES:

1. 2/C #10 + G. See Detail 1.
2. Conductors spliced inside junction box PB-2A located inside girder.
3. Conductors spliced inside junction box PB-1F located suspender main cable.
4. The Contractor shall extend and coil 5 meters of cable in manhole 25. All cables shall be tagged with circuits numbers as shown.
5. Install 5A in-line fuse per light fixture, inside PB-1F.

NOTES:

1. Use multi-conductor cable if circuit is routed via trays.
2. References:
   - For typical pull box schedule, see sheets E-83 and E-169.
   - For circuit and conduit/cable tray schedules, see sheets starting at E-401.
3. For number of lighting fixtures see Lighting Fixture Schedule sheets E-271 and E-272.

REQUEST FOR INFORMATION NOT ADDRESSED IN THIS CCO REMAIN IN FORCE

MARK	DATE	DESCRIPTIONS	BY	CH'D	CCO#
3	03/02/12	ADDITIONAL CABLE LEDs	RR	RG	167S2
2	10/10/08	LIGHTING REVISIONS	RY AG	RG FW	43
1	09/24/08	CABLE ELECTRICAL	RR AG	RG SE	72

REVISIONS

CONTRACT CHANGE ORDER NO._____
SHEET_____ OF _____

DETAILS
TOWER AND SUSPENSION CABLE
480 V MAIN SUSPENSION CABLE LIGHTING WIRING DIAGRAM

NO SCALE

E-236

DATE	BY	REVISED BY	DATE REVISED
8/01	JP		11/01

CALCULATED/DESIGNED BY: JP — CHECKED BY: EDC

DESIGN OVERSIGHT: BEHZAD GOLEMOHAMMADI

STATE OF CALIFORNIA - DEPARTMENT OF TRANSPORTATION — Caltrans

LAST REVISION 03-02-12 — DATE PLOTTED => 3/8/2012 — TIME PLOTTED => 3:22:40 PM

FOR REDUCED PLANS ORIGINAL SCALE IS IN MILLIMETERS 0 20 40 60 80

DGN FILE =>T:\13103\MS\pse\SAS Struc\CCO\SAS CCO167S2\Draft 1 - 2012.03.02 Issued for Submittal\04-0120f1_0250R03.dgn
USERNAME =>garciar

CU 04251 — EA 0120F1

DIST	COUNTY	ROUTE	KILOMETER POST TOTAL PROJECT	SHEET No	TOTAL SHEETS
04	SF	80	13.2/13.9	261 R4	1204

REGISTERED ELECTRICAL ENGINEER 12/19/02 DATE

12/6/04
PLANS APPROVAL DATE

PB POWER, Inc.
A Parsons Brinckerhoff Company
303 Second St., Suite 700N
San Francisco, CA 94107-1317

REGISTERED PROFESSIONAL ENGINEER JENS ERLINGSSON No. 8249 Exp. 9/30/06 ELECTRICAL STATE OF CALIFORNIA

The State of California or its officers or agents shall not be responsible for the accuracy or completeness of electronic copies of this plan sheet.

Caltrans now has a web site! To get to the web site, go to http://www.dot.ca.gov

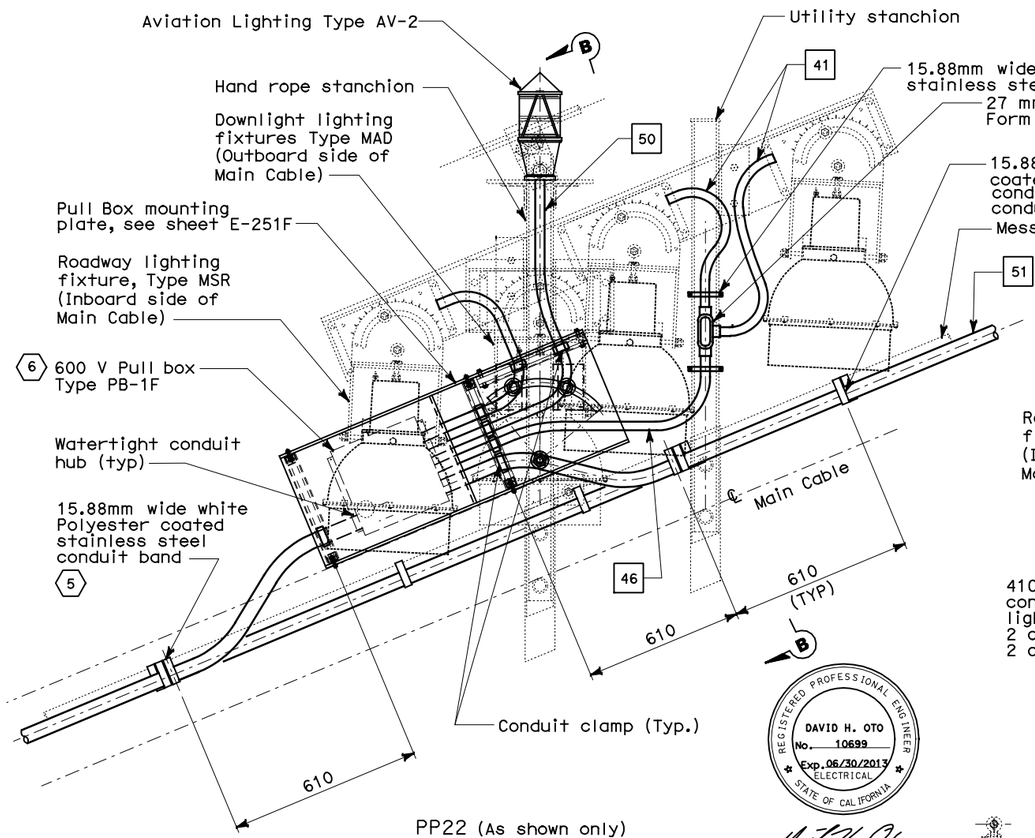

PP22 (As shown only)

DETAIL 1
SCALE: 1:10

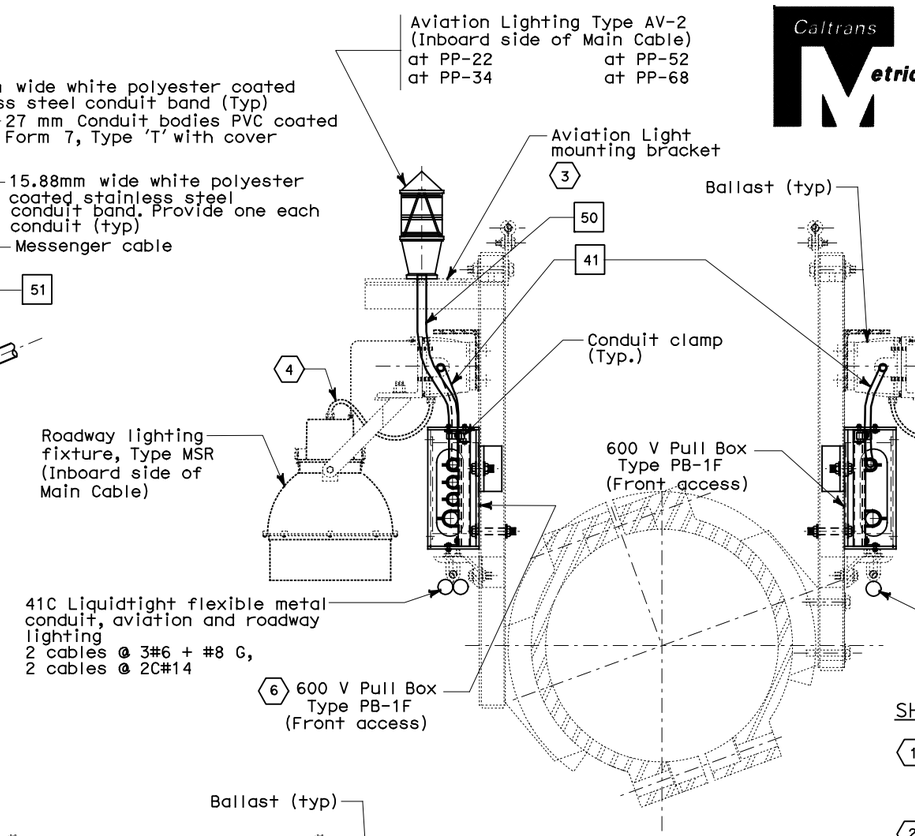

SECTION B-B
1:10

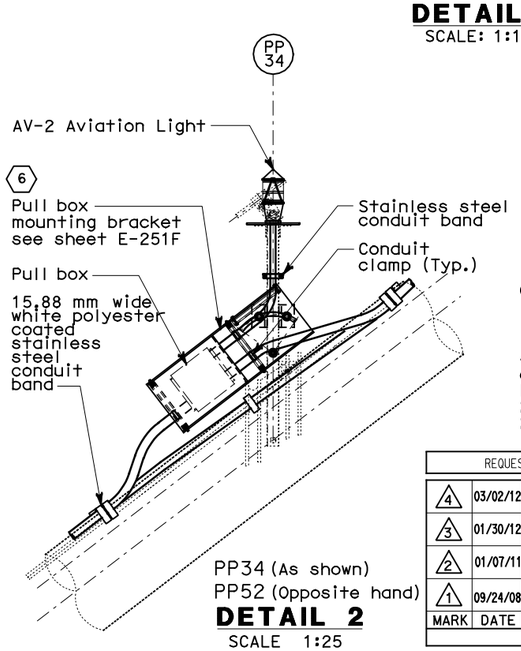

PP34 (As shown)
PP52 (Opposite hand)

DETAIL 2
SCALE 1:25

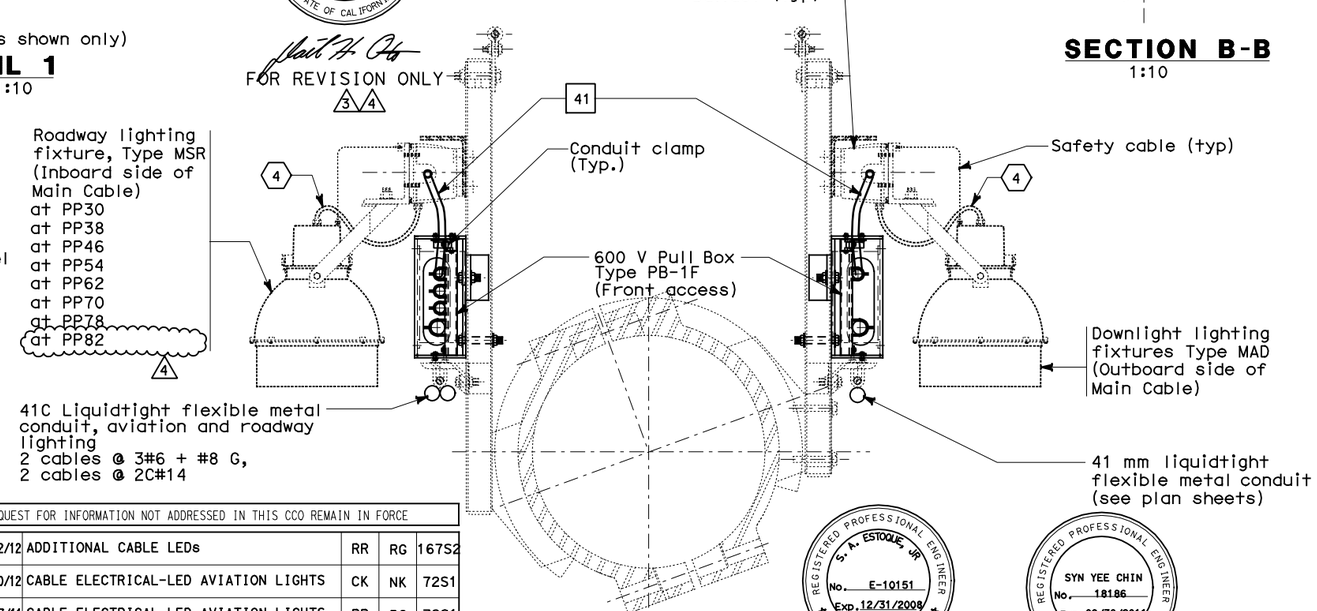

SECTION C-C
1:10
(See sheet E-251C)

FOR REVISION ONLY 3 4

FOR REVISION ONLY 1

FOR REVISION ONLY 2

REGISTERED PROFESSIONAL ENGINEER DAVID H. OTO No. 10699 Exp. 06/30/2013 ELECTRICAL STATE OF CALIFORNIA

REGISTERED PROFESSIONAL ENGINEER S. A. ESTOQUE, JR. No. E-10151 Exp. 12/31/2008 ELECTRICAL STATE OF CALIFORNIA

REGISTERED PROFESSIONAL ENGINEER SYN YEE CHIN No. 18186 Exp. 09/30/2011 ELECTRICAL STATE OF CALIFORNIA

REQUEST FOR INFORMATION NOT ADDRESSED IN THIS CCO REMAIN IN FORCE

MARK	DATE	DESCRIPTIONS	BY	CH'D	CCO#
4	03/02/12	ADDITIONAL CABLE LEDs	RR	RG	167S2
3	01/30/12	CABLE ELECTRICAL-LED AVIATION LIGHTS	CK	NK	72S1
2	01/07/11	CABLE ELECTRICAL-LED AVIATION LIGHTS	RR	RG	72S1
1	09/24/08	CABLE ELECTRICAL	RR AG	RG SE	72

REVISIONS

CONTRACT CHANGE ORDER NO._____
SHEET _____ OF _____

SHEET NOTES:

1. Deleted.
2. For tower and suspension cable pull box schedule, see sheet E-251B.
3. For mounting bracket, see structural sheets for cable handrail details.
4. Liquidtight flexible metal conduit. Provide 150 mm slack on all cord and flexible conduit connection.
5. Use two bands where conduit leaves messenger cable to terminate at a box.
6. Install a 480VAC-24VDC power supply inside pull box PB-1F for Aviation Lighting Type AV-2. See sheet E-251H for details.

NOTES:

1. For tower and suspension cable lighting schedule, see sheets E-271 and E-272.
2. For tower and suspension cable pull box schedule, see sheet E-251B.
3. For tower and suspension cables lighting layout, see sheets E-226 thru E-230.
4. For additional conduits from PB-LTG, see Roadway Plans:
   E-47 (Westbound)
   E-136 (Eastbound)

DETAILS
TOWER AND SUSPENSION CABLE TYPICAL SUSPENSION CABLE LIGHTING
SCALE AS SHOWN

E-251

THIS PLAN ACCURATE FOR ELECTRICAL WORK ONLY.

ALL DIMENSIONS ARE IN MILLIMETERS UNLESS OTHERWISE SHOWN.

STATE OF CALIFORNIA - DEPARTMENT OF TRANSPORTATION
Caltrans

DESIGN OVERSIGHT: BEHZAD GOLEMOHAMMADI

CALCULATED/DESIGNED BY | CHECKED BY | DATE | REVISED BY | DATE REVISED

LAST REVISION 03-02-12 | DATE PLOTTED => 05-MAR-2012 | TIME PLOTTED => 15:31

FOR REDUCED PLANS ORIGINAL SCALE IS IN MILLIMETERS 0 20 40 60 80

DGN FILE =>04-0120f1_0261R04.dgn
USERNAME =>llorico

CU 04251 | EA 0120F1

DIST	COUNTY	ROUTE	KILOMETER POST TOTAL PROJECT	SHEET No	TOTAL SHEETS
04	SF	80	13.2/13.9	261 S2R1	1204

REGISTERED ELECTRICAL ENGINEER — DATE 03/05/08

PLANS APPROVAL DATE

REGISTERED PROFESSIONAL ENGINEER S. A. ESTOQUE, JR. No. E-10151 Exp. 12/31/2008 ELECTRICAL STATE OF CALIFORNIA

PB AMERICAS, Inc.
A Parsons Brinckerhoff Company
303 Second St., Suite 700N
San Francisco, CA 94107-1317

The State of California or its officers or agents shall not be responsible for the accuracy or completeness of electronic copies of this plan sheet.

Caltrans now has a web site! To get to the web site, go to http://www.dot.ca.gov

MAIN CABLE PULL BOX LOCATION SCHEDULE (6)

Panel Point	Location Inboard	Location Outboard	Pull Box Type	Bracket Type	Remarks
PP-10	X		PB-1F	Type B	Roadway ltg
		X	PB-1F	Type A	Downlights (2)
PP-12	-		-	-	
		X	PB-1F	Type A	Downlights
PP-14	-		-	-	
		X	PB-1F	Type A	Downlights
PP-16	X		PB-1F	Type B	Roadway ltg (4)
		X	PB-1F	Type A	Downlights
PP-18	-		-	-	
		X	PB-1F	Type A	Downlights
PP-20	-		-	-	
		X	PB-1F	Type A	Downlights
PP-22	X		PB-1F	Type B	Roadway/Aviation ltg
		X	PB-1F	Type A	Downlights
PP-24	-		-	-	Strong Motion Det. (5) sensor
		X	PB-1F	Type A	Downlights
PP-26	-		-	-	
		X	PB-1F	Type A	Downlights
PP-28	X		PB-1F	Type B	Strong Motion Det. PB
		X	PB-1F	Type A	Downlights
PP-30	X		PB-1F	Type B	Roadway ltg
		X	PB-1F	Type A	Downlights
PP-32	X		PB-1F	Type B	Strong Motion Det. PB
		X	PB-1F	Type A	Downlights
PP-34	X		PB-1F	Type B	Aviation ltg
		X	PB-1F	Type A	Downlights
PP-36	X		PB-1F	Type B	Strong Motion Det. PB
		X	PB-1F	Type A	Downlights
PP-38	X		PB-1F	Type B	Roadway ltg
		X	PB-1F	Type A	Downlights
PP-40	X		PB-1F	Type B	Strong Motion Det. PB
		X	PB-1F	Type A	Downlights
PP-42					See E-251D
PP-44	X		PB-1F	Type A	Strong Motion Det. PB
		X	PB-1F	Type B	Downlights (3)
PP-46	X		PB-1F	Type A	Roadway ltg
		X	PB-1F	Type B	Downlights
PP-48	-		-	-	
		X	PB-1F	Type B	Downlights
PP-50	X		PB-1F	Type A	Strong Motion Det. PB
		X	PB-1F	Type B	Downlights
PP-52	X		PB-1F	Type A	Aviation ltg
		X	PB-1F	Type B	Downlights
PP-54	X		PB-1F	Type A	Roadway ltg
		X	PB-1F	Type B	Downlights
PP-56	X		PB-1F	Type A	Strong Motion Det. PB
		X	PB-1F	Type B	Downlights
PP-58	-		-	Type A	
		X	PB-1F	Type B	Downlights
PP-60	-		-	-	
		X	PB-1F	Type B	Downlights
PP-62	X		PB-1F	Type A	Roadway ltg
		X	PB-1F	Type B	Downlights
PP-64	X		PB-1F	Type A	Strong Motion Det. PB
		X	PB-1F	Type B	Downlights
PP-66	-		-	-	
		X	PB-1F	Type B	Downlights
PP-68	X		PB-1F	Type A	Aviation ltg/Str Mot Det sensor
		X	PB-1F	Type B	Downlights
PP-70	X		PB-1F	Type A	Roadway ltg
		X	PB-1F	Type B	Downlights
PP-72	-		-	-	
		X	PB-1F	Type B	Downlights

PULL BOX LOCATION SCHEDULE AT MAIN CABLE (6)

Panel Point (North Side)	Location Inboard	Location Outboard	Pull Box Type	Bracket Type	Remarks
PP-74	-		-	-	
		X	PB-1F	Type B	Downlights
PP-76	-		-	-	
		X	PB-1F	Type B	Downlights
PP-78	X		PB-1F	Type A	Roadway ltg
		X	PB-1F	Type B	Downlights (1)
PP-80	-		-	-	
		X	PB-1F	Type B	Downlights
PP-82	X		PB-1F	Type B	Roadway ltg
	(1)	X	PB-1F	Type B	Downlights
PP-84	-		-	-	
		X	PB-1F	Type B	Downlights
PP-86	-		-	-	
		X	PB-1F	Type B	Downlights
PP-88	X		PB-1F	Type A	Roadway ltg (4)
		X	PB-1F	Type B	Downlights
PP-90	-		-	-	
		X	PB-1F	Type B	Downlights
PP-92	-		-	-	
		X	PB-1F	Type B	Downlights
PP-94	-		-	-	
		X	PB-1F	Type B	Downlights
PP-96	X		PB-1F	Type A	Roadway ltg (4)
		-	-	-	
PP-102	X		PB-1F	Type A	Roadway ltg (4)
		X	PB-1F	Type B	Downlights (3) (4)

SHEET NOTES:

(1) DELETED (1)

(2) See Downlight Pull Box Detail 3 on drawing E-251A.

(3) Similar to Downlight Pull Box Detail 3 except opposite hand

(4) Pull box only.

(5) Similar to Aviation Pull Box Detail 4 except opposite hand and no aviation light.

(6) Pull box locations are for both eastbound and westbound. For exception, see sheet note (1) 5.

REGISTERED PROFESSIONAL ENGINEER DAVID H. OTO No. 10699 Exp. 06/30/2013 ELECTRICAL STATE OF CALIFORNIA

(1) FOR REVISION ONLY

REQUEST FOR INFORMATION NOT ADDRESSED IN THIS CCO REMAIN IN FORCE

MARK	DATE	DESCRIPTIONS	BY	CH'D	CCO#
(1)	03/02/12	ADDITIONAL CABLE LEDs	RR	RG	167S2
(0)	09/24/08	CABLE ELECTRICAL	RR AG	RG SE	72

REVISIONS

CONTRACT CHANGE ORDER NO._____
SHEET _____ OF _____

DETAILS
TOWER AND SUSPENSION CABLE
SUSPENSION CABLE PULL BOX LOCATION

E-251B

DATE PLOTTED => 05-MAR-2012
TIME PLOTTED => 15:13

LAST REVISION 03-02-12

DATE | REVISED BY | DATE REVISED

CALCULATED/DESIGNED BY | CHECKED BY

DESIGN OVERSIGHT
BEHZAD GOLEMOHAMMADI

STATE OF CALIFORNIA - DEPARTMENT OF TRANSPORTATION
Caltrans

FOR REDUCED PLANS ORIGINAL SCALE IS IN MILLIMETERS 0 20 40 60 80

DGN FILE =>04-0120f1_0261S02R01.dgn
USERNAME =>llorico

CU 04251 | EA 0120F1

REQUEST FOR INFORMATION NOT ADDRESSED IN THIS CCO REMAIN IN FORCE					
3	03/02/12	ADDITIONAL CABLE LEDs	RR	RG	167S2
2	01/30/12	CABLE ELECTRICAL-LED AVIATION LIGHTS	DO	RG	72S1
1	01/07/11	CABLE ELECTRICAL-LED AVIATION LIGHTS	RR	RG	72S1
0	09/24/08	CABLE ELECTRICAL	RR AG	RG SE	72
MARK	DATE	DESCRIPTIONS	BY	CH'D	CCO#
		REVISIONS			

CONTRACT CHANGE ORDER NO._____
SHEET _____ OF _____

Caltrans Metric

DIST	COUNTY	ROUTE	KILOMETER POST TOTAL PROJECT	SHEET No	TOTAL SHEETS
04	SF	80	13.2/13.9	261 S3R3	1204

REGISTERED ELECTRICAL ENGINEER — DATE 03/05/08

REGISTERED PROFESSIONAL ENGINEER S. A. ESTOQUE, JR. No. E-10151 Exp. 12/31/2008 ELECTRICAL STATE OF CALIFORNIA

PLANS APPROVAL DATE

PB AMERICAS, Inc.
A Parsons Brinckerhoff Company
303 Second St., Suite 700N
San Francisco, CA 94107-1317

The State of California or its officers or agents shall not be responsible for the accuracy or completeness of electronic copies of this plan sheet.

Caltrans now has a web site! To get to the web site, go to http://www.dot.ca.gov

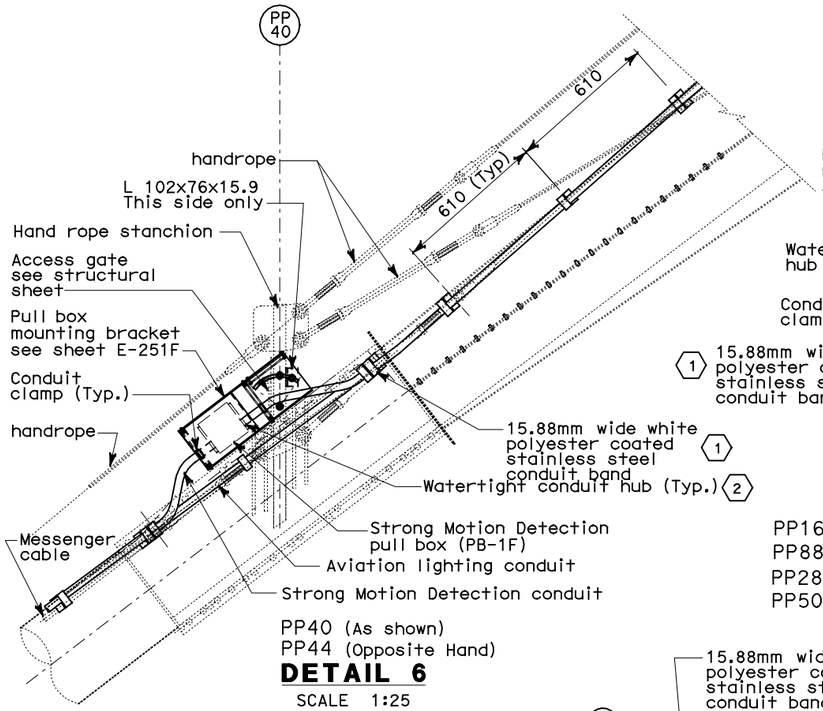

PP40 (As shown)
PP44 (Opposite Hand)

DETAIL 6
SCALE 1:25

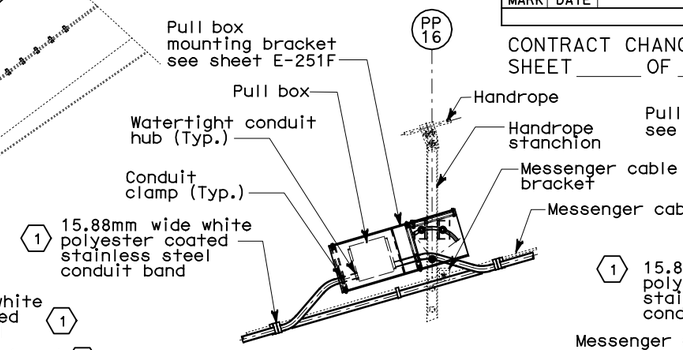

TYPICAL PULL BOX MOUNTING ONLY

PP16 (As shown - Lighting)
PP88 and PP96 (Opposite hand - Lighting)
PP28, PP32 and PP36 (Similar as shown - Strong motion)
PP50, PP56 and PP64 (Opposite hand - Strong motion)

DETAIL 7
SCALE 1:25

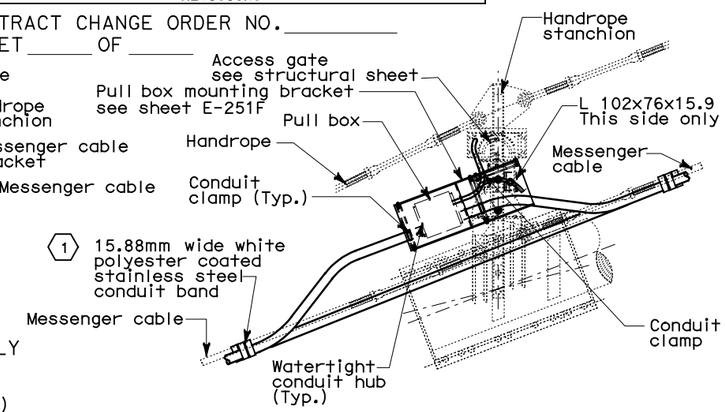

PP10 (As shown)
PP102 (Opposite hand and pull box only)

DETAIL 11
SCALE 1:25

DAVID H. OTO — REGISTERED PROFESSIONAL ENGINEER No. 10699 Exp. 06/30/2013 ELECTRICAL STATE OF CALIFORNIA
FOR REVISION ONLY 2 3

SYN YEE CHIN — REGISTERED PROFESSIONAL ENGINEER No. 18186 Exp. 09/30/2011 ELECTRICAL STATE OF CALIFORNIA
FOR REVISION ONLY 1

SHEET NOTES:

1. Use two bands where conduit leaves messenger cable to terminate at a box.
2. For strong motion sensor platform, see structural sheets for cable handrope details.

NOTE:

1. Refer to sheet E-251D.

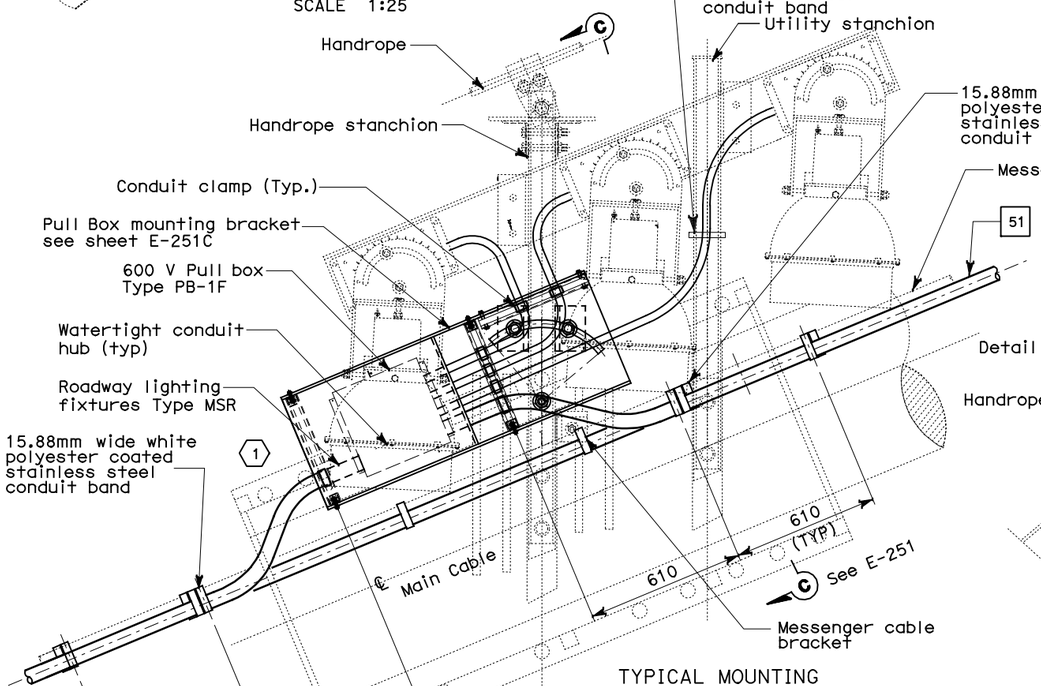

TYPICAL MOUNTING
(Note Number of lights varies. see sheet E-251B)

PP30, PP38 (As shown)
PP46, PP54, PP62, PP70, PP78, PP82 (Opposite Hand)

DETAIL 8
SCALE: 1:10
3

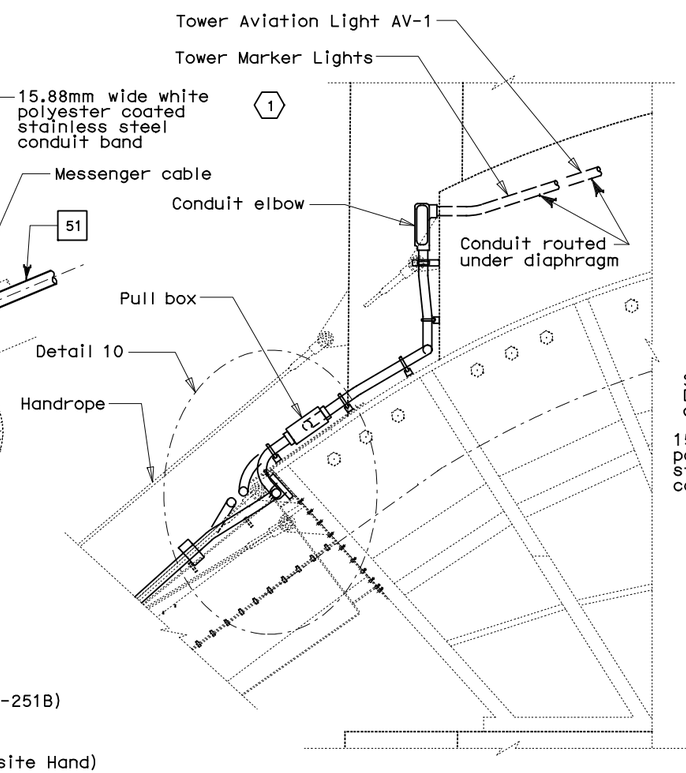

DETAIL 9
SCALE 1:25

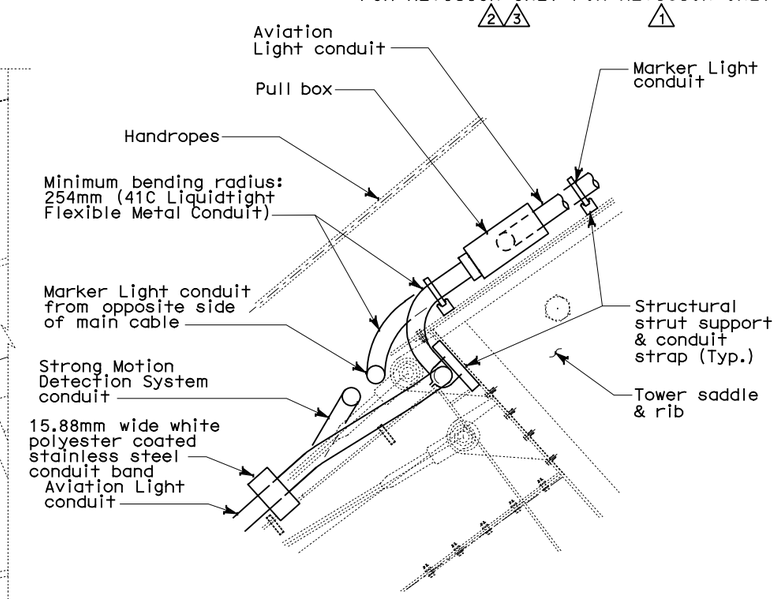

DETAIL 10
NO SCALE

DETAILS
TOWER AND SUSPENSION CABLE
TYPICAL SUSPENSION CABLE LIGHTING
SCALE AS NOTED

THIS PLAN ACCURATE FOR ELECTRICAL WORK ONLY.

ALL DIMENSIONS ARE IN MILLIMETERS UNLESS OTHERWISE SHOWN

E-251C

DATE	REVISED BY	DATE REVISED

CALCULATED/DESIGNED BY — CHECKED BY

DESIGN OVERSIGHT — BEHZAD GOLEMOHAMMADI

STATE OF CALIFORNIA - DEPARTMENT OF TRANSPORTATION — Caltrans

LAST REVISION 03-02-12 — DATE PLOTTED => 05-MAR-2012 TIME PLOTTED => 15:13

FOR REDUCED PLANS ORIGINAL SCALE IS IN MILLIMETERS 0 20 40 60 80

DGN FILE =>04-0120f1_0261S03R03.dgn
USERNAME =>llorico

CU 04251 — EA 0120F1

DIST	COUNTY	ROUTE	KILOMETER POST TOTAL PROJECT	SHEET No	TOTAL SHEETS
04	SF	80	13.2/13.9	276 R3	1204

REGISTERED ELECTRICAL ENGINEER 12/19/02 DATE

12-6-04
PLANS APPROVAL DATE

REGISTERED PROFESSIONAL ENGINEER JENS ERLINGSSON No. 8249 Exp. 9/30/06 ELECTRICAL STATE OF CALIFORNIA

PB POWER, Inc.
A Parsons Brinckerhoff Company
303 Second St., Suite 700N
San Francisco, CA 94107-1317

The State of California or its officers or agents shall not be responsible for the accuracy or completeness of electronic copies of this plan sheet.

Caltrans now has a web site! To get to the web site, go to http://www.dot.ca.gov

Caltrans Metric

REGISTERED PROFESSIONAL ENGINEER DAVID H. OTO No. 10699 Exp. 06/30/2013 ELECTRICAL STATE OF CALIFORNIA — 3 — FOR REVISION ONLY

REGISTERED PROFESSIONAL ENGINEER FADI WALIEDDINE No. 11465 Exp. 12/31/2009 ELECTRICAL STATE OF CALIFORNIA — 2 — FOR REVISION ONLY

REGISTERED PROFESSIONAL ENGINEER MAXWELL FUMIO TAKATA No. E 8651 Exp. 9/30/2008 ELECTRICAL STATE OF CALIFORNIA — 1 — FOR REVISION ONLY

REQUEST FOR INFORMATION NOT ADDRESSED IN THIS CCO REMAIN IN FORCE					
3	03/02/12	ADDITIONAL CABLE LEDs	RR	RG	167S2
2	10/10/08	LIGHTING REVISIONS.	SPO MP	RG ES	43
1	02/19/08	ELECTRICAL MODIFICATIONS.	MP EL	RR	42
MARK	DATE	DESCRIPTIONS	BY	CH'D	CCO#
		REVISIONS			

CONTRACT CHANGE ORDER NO._____
SHEET _____ OF _____

MAIN CABLE ROADWAY AND DOWNLIGHT LIGHTING SCHEDULE

Circuit Number	Station	Location: Roadway side	Location: Suspend at Panel Point	Mounting	Ltg. Fixture Type	Number/ Wattage	Remarks
S-3021	56+78	-	PP-22	Main Cable	MSR-2B-C	2-400 W	with Remote Ballast
S-3021				Main Cable	MSR-2A-C	1-400 W	with Remote Ballast
S-3021	57+18	-	PP-30	Main Cable	MSR-2B-C	2-400 W	with Remote Ballast
S-3021				Main Cable	MSR-2A-C	1-400 W	with Remote Ballast
S-3021	57+58	-	PP-38	Main Cable	MSR-2-C	3-400 W	with Remote Ballast
S-3022	57+98	-	PP-46	Main Cable	MSR-2-C	3-400 W	with Remote Ballast
S-3022	58+38	-	PP-54	Main Cable	MSR-2-C	3-400 W	with Remote Ballast
S-3022	58+78	-	PP-62	Main Cable	MSR-2-C	3-400 W	with Remote Ballast
S-3023	59+18	-	PP-70	Main Cable	MSR-2-C	3-400 W	with Remote Ballast
3 ~~S-3023~~	~~59+58~~	~~-~~	~~PP-78~~	~~Main Cable~~	~~MSR-2B-C~~	~~3-400 W~~	~~with Remote Ballast~~
~~S-3023~~	~~59+78~~	~~-~~	~~PP-82~~	~~Main Cable~~	~~MSR-2B-C~~	~~3-400 W~~	~~with Remote Ballast~~
A-3011	56+18	-	PP-10	Main Cable	MAD-4-C	1-175 W	with Remote Ballast
A-3011	56+28	-	PP-12	Main Cable	MAD-4-C	1-175 W	with Remote Ballast
A-3011	56+38	-	PP-14	Main Cable	MAD-4-C	1-175 W	with Remote Ballast
A-3011	56+48	-	PP-16	Main Cable	MAD-3-C	1-250 W	with Remote Ballast
A-3011	56+58	-	PP-18	Main Cable	MAD-3-C	1-250 W	with Remote Ballast
A-3011	56+68	-	PP-20	Main Cable	MAD-3-C	1-250 W	with Remote Ballast
A-3011	56+78	-	PP-22	Main Cable	MAD-3-C	1-250 W	with Remote Ballast
A-3011	56+88	-	PP-24	Main Cable	MAD-2-C	1-400 W	with Remote Ballast
A-3011	56+98	-	PP-26	Main Cable	MAD-2-C	1-400 W	with Remote Ballast
A-3011	57+08	-	PP-28	Main Cable	MAD-2-C	1-400 W	with Remote Ballast
A-3011	57+18	-	PP-30	Main Cable	MAD-2-C	1-400 W	with Remote Ballast
A-3011	57+28	-	PP-32	Main Cable	MAD-2-C	1-400 W	with Remote Ballast
A-3011	57+38	-	PP-34	Main Cable	MAD-2-C	1-400 W	with Remote Ballast
A-3011	57+48	-	PP-36	Main Cable	MAD-2-C	1-400 W	with Remote Ballast
A-3011	57+58	-	PP-38	Main Cable	MAD-2-C	1-400 W	with Remote Ballast
A-3011	57+68	-	PP-40	Main Cable	MAD-2-C	1-400 W	with Remote Ballast
A-3012	57+88	-	PP-44	Main Cable	MAD-2-C	1-400 W	with Remote Ballast
A-3012	57+98	-	PP-46	Main Cable	MAD-2-C	1-400 W	with Remote Ballast
A-3012	58+08	-	PP-48	Main Cable	MAD-2-C	1-400 W	with Remote Ballast
A-3012	58+18	-	PP-50	Main Cable	MAD-2-C	1-400 W	with Remote Ballast
A-3012	58+28	-	PP-52	Main Cable	MAD-2-C	1-400 W	with Remote Ballast
A-3012	58+38	-	PP-54	Main Cable	MAD-2-C	1-400 W	with Remote Ballast
A-3012	58+48	-	PP-56	Main Cable	MAD-2-C	1-400 W	with Remote Ballast
A-3012	58+58	-	PP-58	Main Cable	MAD-2-C	1-400 W	with Remote Ballast
A-3012	58+68	-	PP-60	Main Cable	MAD-2-C	1-400 W	with Remote Ballast
A-3013	58+78	-	PP-62	Main Cable	MAD-2-C	1-400 W	with Remote Ballast
A-3013	58+88	-	PP-64	Main Cable	MAD-2-C	1-400 W	with Remote Ballast
A-3013	58+98	-	PP-66	Main Cable	MAD-2-C	1-400 W	with Remote Ballast
A-3013	59+08	-	PP-68	Main Cable	MAD-3-C	1-250 W	with Remote Ballast
A-3013	59+18	-	PP-70	Main Cable	MAD-3-C	1-250 W	with Remote Ballast
A-3013	59+28	-	PP-72	Main Cable	MAD-3-C	1-250 W	with Remote Ballast
A-3013	59+38	-	PP-74	Main Cable	MAD-3-C	1-250 W	with Remote Ballast
A-3013	59+48	-	PP-76	Main Cable	MAD-3-C	1-250 W	with Remote Ballast
A-3013	59+58	-	PP-78	Main Cable	MAD-3-C	1-250 W	with Remote Ballast
A-3013	59+68	-	PP-80	Main Cable	MAD-3-C	1-250 W	with Remote Ballast
A-3013	59+78	-	PP-82	Main Cable	MAD-3-C	1-250 W	with Remote Ballast
A-3013	59+88	-	PP-84	Main Cable	MAD-4-C	1-175 W	with Remote Ballast
A-3013	59+98	-	PP-86	Main Cable	MAD-4-C	1-175 W	with Remote Ballast
A-3013	60+08	-	PP-88	Main Cable	MAD-4-C	1-175 W	with Remote Ballast
A-3013	60+18	-	PP-90	Main Cable	MAD-4-C	1-175 W	with Remote Ballast
A-3013	60+28	-	PP-92	Main Cable	MAD-4-C	1-175 W	with Remote Ballast
A-3013	60+38	-	PP-94	Main Cable	MAD-4-C	1-175 W	with Remote Ballast

NOTE:

1. For Roadway and Suspender lightning wiring diagrams see sheets E-236 to E-240.

SUSPENDER UPLIGHT LIGHTING SCHEDULE

Circuit Number	Station	Location: Roadway side	Location: Suspend at Panel Point	Mounting	Ltg. Fixture Type	Number/ Wattage	Remarks
A-3001	56+16	North	Near PP-9	Bridge Deck	MAU-5-D	1-100 W	with Remote Ballast
A-3001	56+20.6	North	PP10+2.6 m	Bridge Deck	MAU-5-D	1-100 W	with Remote Ballast
A-3001	56+28	North	PP-12	Suspender Base	MAU-4-D	2-175 W	with Remote Ballast
A-3001	56+38	North	PP-14	Suspender Base	MAU-4-D	2-175 W	with Remote Ballast
A-3001	56+48	North	PP-16	Suspender Base	MAU-3-D	2-250 W	with Remote Ballast
A-3001	56+58	North	PP-18	Suspender Base	MAU-3-D	2-250 W	with Remote Ballast
A-3001	56+68	North	PP-20	Suspender Base	MAU-3-D	2-250 W	with Remote Ballast
A-3001	56+78	North	PP-22	Suspender Base	MAU-3-D	2-250 W	with Remote Ballast
A-3001	56+88	North	PP-24	Suspender Base	MAU-2-D	2-400 W	with Remote Ballast
A-3002	56+98	North	PP-26	Suspender Base	MAU-2-D	2-400 W	with Remote Ballast
A-3002	57+08	North	PP-28	Suspender Base	MAU-2-D	2-400 W	with Remote Ballast
A-3002	57+18	North	PP-30	Suspender Base	MAU-2-D	2-400 W	with Remote Ballast
A-3002	57+28	North	PP-32	Suspender Base	MAU-2-D	2-400 W	with Remote Ballast
A-3002	57+38	North	PP-34	Suspender Base	MAU-2-D	2-400 W	with Remote Ballast
A-3002	57+48	North	PP-36	Suspender Base	MAU-2-D	2-400 W	with Remote Ballast
A-3003	57+58	North	PP-38	Suspender Base	MAU-2-D	2-400 W	with Remote Ballast
A-3003	57+68	North	PP-40	Suspender Base	MAU-2-D	2-400 W	with Remote Ballast
A-3003	57+78	North	PP-42	Suspender Base	MAU-2-D	2-400 W	with Remote Ballast
A-3003	57+88	North	PP-44	Suspender Base	MAU-2-D	2-400 W	with Remote Ballast
A-3003	57+98	North	PP-46	Suspender Base	MAU-2-D	2-400 W	with Remote Ballast
A-3003	58+08	North	PP-48	Suspender Base	MAU-2-D	2-400 W	with Remote Ballast
A-3004	58+18	North	PP-50	Suspender Base	MAU-2-D	2-400 W	with Remote Ballast
A-3004	58+28	North	PP-52	Suspender Base	MAU-2-D	2-400 W	with Remote Ballast
A-3004	58+38	North	PP-54	Suspender Base	MAU-2-D	2-400 W	with Remote Ballast
A-3004	58+48	North	PP-56	Suspender Base	MAU-2-D	2-400 W	with Remote Ballast
A-3004	58+58	North	PP-58	Suspender Base	MAU-2-D	2-400 W	with Remote Ballast
A-3004	58+68	North	PP-60	Suspender Base	MAU-2-D	2-400 W	with Remote Ballast
A-3005	58+78	North	PP-62	Suspender Base	MAU-2-D	2-400 W	with Remote Ballast
A-3005	58+88	North	PP-64	Suspender Base	MAU-3-D	2-250 W	with Remote Ballast
A-3005	58+98	North	PP-66	Suspender Base	MAU-3-D	2-250 W	with Remote Ballast
A-3005	59+08	North	PP-68	Suspender Base	MAU-3-D	2-250 W	with Remote Ballast
A-3005	59+18	North	PP-70	Suspender Base	MAU-3-D	2-250 W	with Remote Ballast
A-3005	59+28	North	PP-72	Suspender Base	MAU-3-D	2-250 W	with Remote Ballast
A-3006	59+38	North	PP-74	Suspender Base	MAU-3-D	2-250 W	with Remote Ballast
A-3006	59+48	North	PP-76	Suspender Base	MAU-3-D	2-250 W	with Remote Ballast
A-3006	59+58	North	PP-78	Suspender Base	MAU-3-D	2-250 W	with Remote Ballast
A-3006	59+68	North	PP-80	Suspender Base	MAU-4-D	2-175 W	with Remote Ballast
A-3006	59+78	North	PP-82	Suspender Base	MAU-4-D	2-175 W	with Remote Ballast
A-3006	59+88	North	PP-84	Suspender Base	MAU-4-D	2-175 W	with Remote Ballast
A-3006	59+98	North	PP-86	Suspender Base	MAU-4-D	2-175 W	with Remote Ballast
A-3006	60+08	North	PP-88	Suspender Base	MAU-4-D	2-175 W	with Remote Ballast
A-3006	60+18	North	West PP-90	Suspender Base	MAU-4-D	1-175 W	with Remote Ballast
A-3006	60+23	North	Near PP-91	Bridge Deck	MAU-5-D	1-100 W	with Remote Ballast
A-3006	60+33	North	PP-93	Bridge Deck	MAU-5-D	1-100 W	with Remote Ballast

SAS SUPERSTRUCTURE - WB

DETAILS
TOWER AND SUSPENSION CABLE LIGHTING SCHEDULES
NO SCALE

E-271

REVISED BY	DATE REVISED
JP	DATE 09/01
CALCULATED/ DESIGNED BY	CHECKED BY
DESIGN OVERSIGHT	BEHZAD GOLEMOHAMMADI

STATE OF CALIFORNIA - DEPARTMENT OF TRANSPORTATION
Caltrans

LAST REVISION 03-02-12
DATE PLOTTED => 05-MAR-2012
TIME PLOTTED => 15:13

FOR REDUCED PLANS ORIGINAL SCALE IS IN MILLIMETERS 0 20 40 60 80
DGN FILE =>04-0120f1_0276R03.dgn
USERNAME =>llorico
CU 04251
EA 0120F1

DIST	COUNTY	ROUTE	KILOMETER POST TOTAL PROJECT	SHEET No	TOTAL SHEETS
04	SF	80	13.2/13.9	277R2	1204

REGISTERED ELECTRICAL ENGINEER 12/19/02 DATE

12-6-04
PLANS APPROVAL DATE

REGISTERED PROFESSIONAL ENGINEER JENS ERLINGSSON No. 8249 Exp. 9/30/06 ELECTRICAL STATE OF CALIFORNIA

PB POWER, Inc.
A Parsons Brinckerhoff Company
303 Second St., Suite 700N
San Francisco, CA 94107-1317

The State of California or its officers or agents shall not be responsible for the accuracy or completeness of electronic copies of this plan sheet.

Caltrans now has a web site! To get to the web site, go to http://www.dot.ca.gov

Caltrans Metric

REQUEST FOR INFORMATION NOT ADDRESSED IN THIS CCO REMAIN IN FORCE

MARK	DATE	DESCRIPTIONS	BY	CH'D	CCO#
2	03/02/12	ADDITIONAL CABLE LEDs	RR	RG	167S2
1	02/19/08	ELECTRICAL MODIFICATIONS	MP EL	RR	42

REVISIONS

CONTRACT CHANGE ORDER NO._____
SHEET _____ OF _____

MAIN CABLE ROADWAY AND DOWNLIGHT LIGHTING SCHEDULE

Circuit Number	Station	Location: Roadway side	Location: Suspend at Panel Point	Mounting	Ltg. Fixture Type	Number/ Wattage	Remarks
S-3051	56+69		PP-22	Main Cable	MSR-2B-C	2-400 W	with Remote Ballast
S-3051					MSR-2A-C	1-400 W	with Remote Ballast
S-3051	57+09		PP-30	Main Cable	MSR-2B-C	2-400 W	with Remote Ballast
S-3051					MSR-2A-C	1-400 W	with Remote Ballast
S-3051	57+49		PP-38	Main Cable	MSR-2-C	3-400 W	with Remote Ballast
S-3052	57+89		PP-46	Main Cable	MSR-2-C	3-400 W	with Remote Ballast
S-3052	58+29		PP-54	Main Cable	MSR-2-C	3-400 W	with Remote Ballast
S-3052	58+69		PP-62	Main Cable	MSR-2-C	3-400 W	with Remote Ballast
S-3053	59+09		PP-70	Main Cable	MSR-2-C	3-400 W	with Remote Ballast
S-3053	59+49		PP-78	Main Cable	MSR-2B-C	2-400 W	with Remote Ballast
S-3053					MSR-2-C	1-400 W	with Remote Ballast
S-3053	59+69		PP-82 (2)	Main Cable	MSR-2B-C	3-400 W (2)	with Remote Ballast
A-3041	56+09		PP-10	Main Cable	MAD-4-C	1-175 W	with Remote Ballast
A-3041	56+19		PP-12	Main Cable	MAD-4-C	1-175 W	with Remote Ballast
A-3041	56+29		PP-14	Main Cable	MAD-4-C	1-175 W	with Remote Ballast
A-3041	56+39		PP-16	Main Cable	MAD-3-C	1-250 W	with Remote Ballast
A-3041	56+49		PP-18	Main Cable	MAD-3-C	1-250 W	with Remote Ballast
A-3041	56+59		PP-20	Main Cable	MAD-3-C	1-250 W	with Remote Ballast
A-3041	56+69		PP-22	Main Cable	MAD-3-C	1-250 W	with Remote Ballast
A-3041	56+79		PP-24	Main Cable	MAD-2-C	1-400 W	with Remote Ballast
A-3041	56+89		PP-26	Main Cable	MAD-2-C	1-400 W	with Remote Ballast
A-3041	56+99		PP-28	Main Cable	MAD-2-C	1-400 W	with Remote Ballast
A-3041	57+09		PP-30	Main Cable	MAD-2-C	1-400 W	with Remote Ballast
A-3041	57+19		PP-32	Main Cable	MAD-2-C	1-400 W	with Remote Ballast
A-3041	57+29		PP-34	Main Cable	MAD-2-C	1-400 W	with Remote Ballast
A-3041	57+39		PP-36	Main Cable	MAD-2-C	1-400 W	with Remote Ballast
A-3041	57+49		PP-38	Main Cable	MAD-2-C	1-400 W	with Remote Ballast
A-3041	57+59		PP-40	Main Cable	MAD-2-C	1-400 W	with Remote Ballast
A-3042	57+79		PP-44	Main Cable	MAD-2-C	1-400 W	with Remote Ballast
A-3042	57+89		PP-46	Main Cable	MAD-2-C	1-400 W	with Remote Ballast
A-3042	57+99		PP-48	Main Cable	MAD-2-C	1-400 W	with Remote Ballast
A-3042	58+09		PP-50	Main Cable	MAD-2-C	1-400 W	with Remote Ballast
A-3042	58+19		PP-52	Main Cable	MAD-2-C	1-400 W	with Remote Ballast
A-3042	58+29		PP-54	Main Cable	MAD-2-C	1-400 W	with Remote Ballast
A-3042	58+39		PP-56	Main Cable	MAD-2-C	1-400 W	with Remote Ballast
A-3042	58+49		PP-58	Main Cable	MAD-2-C	1-400 W	with Remote Ballast
A-3042	58+59		PP-60	Main Cable	MAD-2-C	1-400 W	with Remote Ballast
A-3043	58+69		PP-62	Main Cable	MAD-2-C	1-400 W	with Remote Ballast
A-3043	58+79		PP-64	Main Cable	MAD-2-C	1-400 W	with Remote Ballast
A-3043	58+89		PP-66	Main Cable	MAD-2-C	1-400 W	with Remote Ballast
A-3043	58+99		PP-68	Main Cable	MAD-3-C	1-250 W	with Remote Ballast
A-3043	59+09		PP-70	Main Cable	MAD-3-C	1-250 W	with Remote Ballast
A-3043	59+19		PP-72	Main Cable	MAD-3-C	1-250 W	with Remote Ballast
A-3043	59+29		PP-74	Main Cable	MAD-3-C	1-250 W	with Remote Ballast
A-3043	59+39		PP-76	Main Cable	MAD-3-C	1-250 W	with Remote Ballast
A-3043	59+49		PP-78	Main Cable	MAD-3-C	1-250 W	with Remote Ballast
A-3043	59+59		PP-80	Main Cable	MAD-3-C	1-250 W	with Remote Ballast
A-3043	59+69		PP-82	Main Cable	MAD-3-C	1-250 W	with Remote Ballast
A-3043	59+79		PP-84	Main Cable	MAD-4-C	1-175 W	with Remote Ballast
A-3043	59+89		PP-86	Main Cable	MAD-4-C	1-175 W	with Remote Ballast
A-3043	59+99		PP-88	Main Cable	MAD-4-C	1-175 W	with Remote Ballast
A-3043	60+09		PP-90	Main Cable	MAD-4-C	1-175 W	with Remote Ballast
A-3043	60+19		PP-92	Main Cable	MAD-4-C	1-175 W	with Remote Ballast
A-3043	60+29		PP-94	Main Cable	MAD-4-C	1-175 W	with Remote Ballast

SUSPENDER UPLIGHT LIGHTING SCHEDULE

Circuit Number	Station	Location: Roadway side	Location: Suspend at Panel Point	Mounting	Ltg. Fixture Type	Number/ Wattage	Remarks
A-3031	56+07	South	Near PP-9	Bridge Deck	MAU-5-D	1-100 W	with Remote Ballast
A-3031	56+13	South	Near PP-11	Bridge Deck	MAU-5-D	1-100 W	with Remote Ballast
A-3031	56+19	South	PP-12	Suspender base	MAU-4-D	2-175 W	with Remote Ballast
A-3031	56+29	South	PP-14	Suspender base	MAU-4-D	2-175 W	with Remote Ballast
A-3031	56+39	South	PP-16	Suspender base	MAU-3-D	2-250 W	with Remote Ballast
A-3031	56+49	South	PP-18	Suspender base	MAU-3-D	2-250 W	with Remote Ballast
A-3031	56+59	South	PP-20	Suspender base	MAU-3-D	2-250 W	with Remote Ballast
A-3031	56+69	South	PP-22	Suspender base	MAU-3-D	2-250 W	with Remote Ballast
A-3031	56+79	South	PP-24	Suspender base	MAU-2-D	2-400 W	with Remote Ballast
A-3032	56+89	South	PP-26	Suspender base	MAU-2-D	2-400 W	with Remote Ballast
A-3032	56+99	South	PP-28	Suspender base	MAU-2-D	2-400 W	with Remote Ballast
A-3032	57+09	South	PP-30	Suspender base	MAU-2-D	2-400 W	with Remote Ballast
A-3032	57+19	South	PP-32	Suspender base	MAU-2-D	2-400 W	with Remote Ballast
A-3032	57+29	South	PP-34	Suspender base	MAU-2-D	2-400 W	with Remote Ballast
A-3032	57+39	South	PP-36	Suspender base	MAU-2-D	2-400 W	with Remote Ballast
A-3033	57+49	South	PP-38	Suspender base	MAU-2-D	2-400 W	with Remote Ballast
A-3033	57+59	South	PP-40	Suspender base	MAU-2-D	2-400 W	with Remote Ballast
A-3033	57+69	South	PP-42	Suspender base	MAU-2-D	2-400 W	with Remote Ballast
A-3033	57+79	South	PP-44	Suspender base	MAU-2-D	2-400 W	with Remote Ballast
A-3033	57+89	South	PP-46	Suspender base	MAU-2-D	2-400 W	with Remote Ballast
A-3033	57+99	South	PP-48	Suspender base	MAU-2-D	2-400 W	with Remote Ballast
A-3034	58+09	South	PP-50	Suspender base	MAU-2-D	2-400 W	with Remote Ballast
A-3034	58+19	South	PP-52	Suspender base	MAU-2-D	2-400 W	with Remote Ballast
A-3034	58+29	South	PP-54	Suspender base	MAU-2-D	2-400 W	with Remote Ballast
A-3034	58+39	South	PP-56	Suspender base	MAU-2-D	2-400 W	with Remote Ballast
A-3034	58+49	South	PP-58	Suspender base	MAU-2-D	2-400 W	with Remote Ballast
A-3034	58+59	South	PP-60	Suspender base	MAU-2-D	2-400 W	with Remote Ballast
A-3035	58+69	South	PP-62	Suspender base	MAU-2-D	2-400 W	with Remote Ballast
A-3035	58+79	South	PP-64	Suspender base	MAU-3-D	2-250 W	with Remote Ballast
A-3035	58+89	South	PP-66	Suspender base	MAU-3-D	2-250 W	with Remote Ballast
A-3035	58+99	South	PP-68	Suspender base	MAU-3-D	2-250 W	with Remote Ballast
A-3035	59+09	South	PP-70	Suspender base	MAU-3-D	2-250 W	with Remote Ballast
A-3035	59+19	South	PP-72	Suspender base	MAU-3-D	2-250 W	with Remote Ballast
A-3036	59+29	South	PP-74	Suspender base	MAU-3-D	2-250 W	with Remote Ballast
A-3036	59+39	South	PP-76	Suspender base	MAU-3-D	2-250 W	with Remote Ballast
A-3036	59+49	South	PP-78	Suspender base	MAU-3-D	2-250 W	with Remote Ballast
A-3036	59+59	South	PP-80	Suspender base	MAU-4-D	2-175 W	with Remote Ballast
A-3036	59+69	South	PP-82	Suspender base	MAU-4-D	2-175 W	with Remote Ballast
A-3036	59+79	South	PP-84	Suspender base	MAU-4-D	2-175 W	with Remote Ballast
A-3036	59+89	South	PP-86	Suspender base	MAU-4-D	2-175 W	with Remote Ballast
A-3036	59+99	South	PP-88	Suspender base	MAU-4-D	2-175 W	with Remote Ballast
A-3036	60+09	South	West PP-90	Suspender base	MAU-4-D	1-175 W	with Remote Ballast
A-3036	60+15	South	Near PP-91	Bridge Deck	MAU-5-D	1-100 W	with Remote Ballast
A-3036	60+25	South	PP-93	Bridge Deck	MAU-5-D	1-100 W	with Remote Ballast

NOTES:

1. For Roadway and Suspender lightning wiring diagrams see sheets EE-243 to EE-247.

SAS SUPERSTRUCTURE - EB

REGISTERED PROFESSIONAL ENGINEER DAVID H. OTO No. 10699 Exp. 06/30/2013 ELECTRICAL STATE OF CALIFORNIA (2)

FOR REVISION ONLY

REGISTERED PROFESSIONAL ENGINEER MARCELL FUMIO TAKAKI No. E 8651 Exp. 9/30/2008 ELECTRICAL STATE OF CALIFORNIA (1)

FOR REVISION ONLY

DETAILS
TOWER AND SUSPENSION CABLE LIGHTING SCHEDULES
NO SCALE

E-272

STATE OF CALIFORNIA - DEPARTMENT OF TRANSPORTATION
Caltrans

DESIGN OVERSIGHT
BEHZAD GOLEMOHAMMADI

CALCULATED/ DESIGNED BY | CHECKED BY | JP | EDC | DATE 8/01 | 11/01 | REVISED BY | DATE REVISED

LAST REVISION 03-02-12 | DATE PLOTTED => 05-MAR-2012 | TIME PLOTTED => 15:14

FOR REDUCED PLANS ORIGINAL SCALE IS IN MILLIMETERS 0 20 40 60 80

DGN FILE =>04-0120f1_0277R02.dgn
USERNAME =>llorico

CU 04251 | EA 0120F1

DIST	COUNTY	ROUTE	KILOMETER POST TOTAL PROJECT	SHEET No	TOTAL SHEETS
04	SF	80	13.2/13.9	378 R3	1204

REGISTERED ELECTRICAL ENGINEER 12/19/02 DATE

12-6-04
PLANS APPROVAL DATE

PB POWER, Inc.
A Parsons Brinckerhoff Company
303 Second St., Suite 700N
San Francisco, CA 94107-1317

REGISTERED PROFESSIONAL ENGINEER JENS ERLINGSSON No. 8249 Exp. 9/30/06 ELECTRICAL STATE OF CALIFORNIA

The State of California or its officers or agents shall not be responsible for the accuracy or completeness of electronic copies of this plan sheet.

Caltrans now has a web site! To get to the web site, go to: http://www.dot.ca.gov

Caltrans Metric

REQUEST FOR INFORMATION NOT ADDRESSED IN THIS CCO REMAIN IN FORCE

MARK	DATE	DESCRIPTIONS	BY	CH'D	CCO#
3	03/02/12	ADDITIONAL CABLE LEDs	RR	RG	167S2
2	02/18/11	CABLE ELECTRICAL-LED AVIATION LIGHTS	TW	RG	72S1
1	09/24/08	CABLE ELECTRICAL	RR AG	RG SE	72

REVISIONS

CONTRACT CHANGE ORDER NO._____
SHEET _____ OF _____

REGISTERED PROFESSIONAL ENGINEER DAVID H. OTO No. 10699 Exp. 06/30/2013 ELECTRICAL STATE OF CALIFORNIA
FOR REVISION ONLY 3

REGISTERED PROFESSIONAL ENGINEER SYN YEE CHIN No. 18186 Exp. 09/30/2011 ELECTRICAL STATE OF CALIFORNIA
FOR REVISION ONLY 2

REGISTERED PROFESSIONAL ENGINEER S. A. ESTOQUE, JR No. E-10151 Exp. 12/31/2008 ELECTRICAL STATE OF CALIFORNIA
FOR REVISION ONLY 1

CONDUIT DATA

Conduit No	Reference	Size	Type	Total Fill (mm²)	Allowable Fill (mm²)	Included Cable No.	Conductor Type
3130	E-100	41	RGS-PVC coated conduit	527.18	534.55	A-3013-1	1-3/C + gnd #2,600 V, EPR insulation
						Pull rope	Soft-Fiber Polyester
3131	E-230	41	Liquidtight flexible metal	484.32	511.11	Pull rope	Soft-Fiber Polyester
			conduit			S-3022-2	3 + 1 gnd #6,#8, 600 V, RHH/RHW insulation
						S-3023-2	3 + 1 gnd #6,#8, 600 V, RHH/RHW insulation
						S-3056-15	2-1/C #14, 600 V, EPR insulation
						S-3056-16	2-1/C #14, 600 V, EPR insulation
3132	E-230	41	Liquidtight flexible metal	484.32	511.11	S-3023-2	3 + 1 gnd #6,#8, 600 V, RHH/RHW insulation
			conduit			S-3022-2	3 + 1 gnd #6,#8, 600 V, RHH/RHW insulation
						S-3056-15	2-1/C #14, 600 V, EPR insulation
						S-3056-16	2-1/C #14, 600 V, EPR insulation
						Pull rope	Soft-Fiber Polyester
3133	E-229, E-230	41	Liquidtight flexible metal	484.32	511.11	S-3023-2	3 + 1 gnd #6,#8, 600 V, RHH/RHW insulation
			conduit			Pull rope	Soft-Fiber Polyester
						S-3056-16	2-1/C #14, 600 V, EPR insulation
						S-3022-2	3 + 1 gnd #6,#8, 600 V, RHH/RHW insulation
						S-3056-15	2-1/C #14, 600 V, EPR insulation
3134	E-229	41	Liquidtight flexible metal	484.32	511.11	S-3023-2	3 + 1 gnd #6,#8, 600 V, RHH/RHW insulation
			conduit			S-3022-2	3 + 1 gnd #6,#8, 600 V, RHH/RHW insulation
						S-3056-15	2-1/C #14, 600 V, EPR insulation
						S-3056-16	2-1/C #14, 600 V, EPR insulation
						Pull rope	Soft-Fiber Polyester
3135	E-229	41	Liquidtight flexible metal	484.32	511.11	S-3023-2	3 + 1 gnd #6,#8, 600 V, RHH/RHW insulation
			conduit			S-3022-2	3 + 1 gnd #6,#8, 600 V, RHH/RHW insulation
						S-3056-15	2-1/C #14, 600 V, EPR insulation
						S-3056-16	2-1/C #14, 600 V, EPR insulation
						Pull rope	Soft-Fiber Polyester
3137	E-229	41	Liquidtight flexible metal	484.32	511.11	Pull rope	Soft-Fiber Polyester
			conduit			S-3056-16	2-1/C #14, 600 V, EPR insulation
						S-3056-15	2-1/C #14, 600 V, EPR insulation
						S-3023-2	3 + 1 gnd #6,#8, 600 V, RHH/RHW insulation
						S-3022-2	3 + 1 gnd #6,#8, 600 V, RHH/RHW insulation
3138	E-228, E-229	41	Liquidtight flexible metal	271.47	511.11	S-3022-2	3 + 1 gnd #6,#8, 600 V, RHH/RHW insulation
			conduit			Pull rope	Soft-Fiber Polyester
						S-3056-15	2-1/C #14, 600 V, EPR insulation
						S-3056-16	2-1/C #14, 600 V, EPR insulation
3139	E-228	41	Liquidtight flexible metal	455.01	511.11	Pull rope	Soft-Fiber Polyester
			conduit			3 S-3056-15	2-1/C #14, 600 V, EPR insulation
						S-3056-2	3 + 1 gnd #6,#8, 600 V, RHH/RHW insulation
						S-3022-2	3 + 1 gnd #6,#8, 600 V, RHH/RHW insulation
3140	E-228	41	Liquidtight flexible metal	455.01	511.11	Pull rope	Soft-Fiber Polyester
			conduit			S-3056-2	3 + 1 gnd #6,#8, 600 V, RHH/RHW insulation
						S-3022-2	3 + 1 gnd #6,#8, 600 V, RHH/RHW insulation
						3 S-3056-15	2-1/C #14, 600 V, EPR insulation
3141	E-228	41	Liquidtight flexible metal	455.01	511.11	S-3022-2	3 + 1 gnd #6,#8, 600 V, RHH/RHW insulation
			conduit			S-3056-2	3 + 1 gnd #6,#8, 600 V, RHH/RHW insulation
						Pull rope	Soft-Fiber Polyester
						3 S-3056-15	2-1/C #14, 600 V, EPR insulation
3142	E-227, E-228	41	Liquidtight flexible metal	425.70	511.11	S-3022-2	3 + 1 gnd #6,#8, 600 V, RHH/RHW insulation
			conduit			S-3056-2	3 + 1 gnd #6,#8, 600 V, RHH/RHW insulation
						Pull rope	Soft-Fiber Polyester
3143	E-96	53	RGS conduit	724.32	879.42		
						S-3056-1	1-3/C + gnd #6,600 V, EPR insulation
						S-3056-7	1-2/C #14,600 V, EPR insulation
						Pull rope	Soft-Fiber Polyester
						S-3021-1	1-3/C + gnd #4,600 V, EPR insulation
3144	E-96	53	RGS conduit	852.74	879.42	A-3008-1	1-2/C + gnd #8,600 V, EPR insulation
						A-3011-1	1-3/C + gnd #2,600 V, EPR insulation
						Pull rope	Soft-Fiber Polyester
						S-3056-5	1-4/C #14,600 V, EPR insulation
3145	E-96	41	RGS conduit	0.00	534.55	Pull rope	Soft-Fiber Polyester
3146	E-96	41	RGS conduit	0.00	534.55	Pull rope	Soft-Fiber Polyester

CONDUIT DATA

Conduit No	Reference	Size	Type	Total Fill (mm²)	Allowable Fill (mm²)	Included Cable No.	Conductor Type
3148	E-50, E-100	41	RGS-PVC coated conduit	425.70	534.55	A-3012-2	3 + 1 gnd #6,#8, 600 V, RHH/RHW insulation
						Pull rope	Soft-Fiber Polyester
						A-3013-2	3 + 1 gnd #6,#8, 600 V, RHH/RHW insulation
3150	E-230	41	Liquidtight flexible metal	425.70	511.11	Pull rope	Soft-Fiber Polyester
						A-3013-2	3 + 1 gnd #6,#8, 600 V, RHH/RHW insulation
			conduit			A-3012-2	3 + 1 gnd #6,#8, 600 V, RHH/RHW insulation
3151	E-230	41	Liquidtight flexible metal	425.70	511.11	A-3013-2	3 + 1 gnd #6,#8, 600 V, RHH/RHW insulation
			conduit			Pull rope	Soft-Fiber Polyester
						A-3012-2	3 + 1 gnd #6,#8, 600 V, RHH/RHW insulation
3152	E-229, E-230	41	Liquidtight flexible metal	425.70	511.11	A-3013-2	3 + 1 gnd #6,#8, 600 V, RHH/RHW insulation
			conduit			A-3012-2	3 + 1 gnd #6,#8, 600 V, RHH/RHW insulation
						Pull rope	Soft-Fiber Polyester
3153	E-229	41	Liquidtight flexible metal	425.70	511.11	A-3012-2	3 + 1 gnd #6,#8, 600 V, RHH/RHW insulation
			conduit			A-3013-2	3 + 1 gnd #6,#8, 600 V, RHH/RHW insulation
						Pull rope	Soft-Fiber Polyester
3154	E-229	41	Liquidtight flexible metal	425.70	511.11	A-3012-2	3 + 1 gnd #6,#8, 600 V, RHH/RHW insulation
			conduit			Pull rope	Soft-Fiber Polyester
						A-3013-2	3 + 1 gnd #6,#8, 600 V, RHH/RHW insulation
3155	E-229	41	Liquidtight flexible metal	425.70	511.11	A-3013-2	3 + 1 gnd #6,#8, 600 V, RHH/RHW insulation
			conduit			Pull rope	Soft-Fiber Polyester
						A-3012-2	3 + 1 gnd #6,#8, 600 V, RHH/RHW insulation
3156	E-229	41	Liquidtight flexible metal	425.70	511.11	A-3013-2	3 + 1 gnd #6,#8, 600 V, RHH/RHW insulation
			conduit			A-3012-2	3 + 1 gnd #6,#8, 600 V, RHH/RHW insulation
						Pull rope	Soft-Fiber Polyester
3157	E-229	41	Liquidtight flexible metal	425.70	511.11	A-3013-2	3 + 1 gnd #6,#8, 600 V, RHH/RHW insulation
			conduit			Pull rope	Soft-Fiber Polyester
						A-3012-2	3 + 1 gnd #6,#8, 600 V, RHH/RHW insulation
3158	E-229	41	Liquidtight flexible metal	425.70	511.11	Pull rope	Soft-Fiber Polyester
			conduit			A-3013-2	3 + 1 gnd #6,#8, 600 V, RHH/RHW insulation
						A-3012-2	3 + 1 gnd #6,#8, 600 V, RHH/RHW insulation
3159	E-229	41	Liquidtight flexible metal	425.70	511.11	Pull rope	Soft-Fiber Polyester
			conduit			A-3013-2	3 + 1 gnd #6,#8, 600 V, RHH/RHW insulation
						A-3012-2	3 + 1 gnd #6,#8, 600 V, RHH/RHW insulation
3160	E-229	41	Liquidtight flexible metal	425.70	511.11	A-3012-2	3 + 1 gnd #6,#8, 600 V, RHH/RHW insulation
			conduit			A-3013-2	3 + 1 gnd #6,#8, 600 V, RHH/RHW insulation
						Pull rope	Soft-Fiber Polyester
3161	E-229	41	Liquidtight flexible metal	425.70	511.11	A-3012-2	3 + 1 gnd #6,#8, 600 V, RHH/RHW insulation
			conduit			A-3013-2	3 + 1 gnd #6,#8, 600 V, RHH/RHW insulation
						Pull rope	Soft-Fiber Polyester
3162	E-229	41	Liquidtight flexible metal	425.70	511.11	A-3012-2	3 + 1 gnd #6,#8, 600 V, RHH/RHW insulation
			conduit			A-3013-2	3 + 1 gnd #6,#8, 600 V, RHH/RHW insulation
						Pull rope	Soft-Fiber Polyester

For continuation, see next sheet.

CONDUIT AND TRAY SCHEDULE

E-423

DATE	REVISED BY	DATE	REVISED
PBP	AB	8/02	8/02

CALCULATED/DESIGNED BY — CHECKED BY

DESIGN OVERSIGHT — BEHZAD GOLEMOHAMMADI

STATE OF CALIFORNIA - DEPARTMENT OF TRANSPORTATION

Caltrans

FOR REDUCED PLANS ORIGINAL SCALE IS IN MILLIMETERS 0 20 40 60 80

DGN FILE =>04-0120f1_0378R03.dgn
USERNAME =>llorico

CU 04251 EA 0120F1

DATE PLOTTED => 06-MAR-2012
TIME PLOTTED => 15:31

LAST REVISION 03-02-12