DIST	COUNTY	ROUTE	KILOMETER POST TOTAL PROJECT	SHEET No	TOTAL SHEETS
04	SF,Ala	80	13.2 / 13.9	193S01	1204

Syn Yee Chin 10/28/10
REGISTERED ELECTRICAL ENGINEER DATE

REGISTERED PROFESSIONAL ENGINEER
SYN YEE CHIN
No. 18186
Exp. 09/30/2011
ELECTRICAL
STATE OF CALIFORNIA

PLANS APPROVAL DATE

PB AMERICAS, Inc.
A Parsons Brinckerhoff Company
303 Second St., Suite 700N
San Francisco, CA 94107-1317

The State of California or its officers or agents shall not be responsible for the accuracy or completeness of electronic copies of this plan sheet.

Caltrans now has a web site! To get to the web site, go to http://www.dot.ca.gov

Caltrans Metric

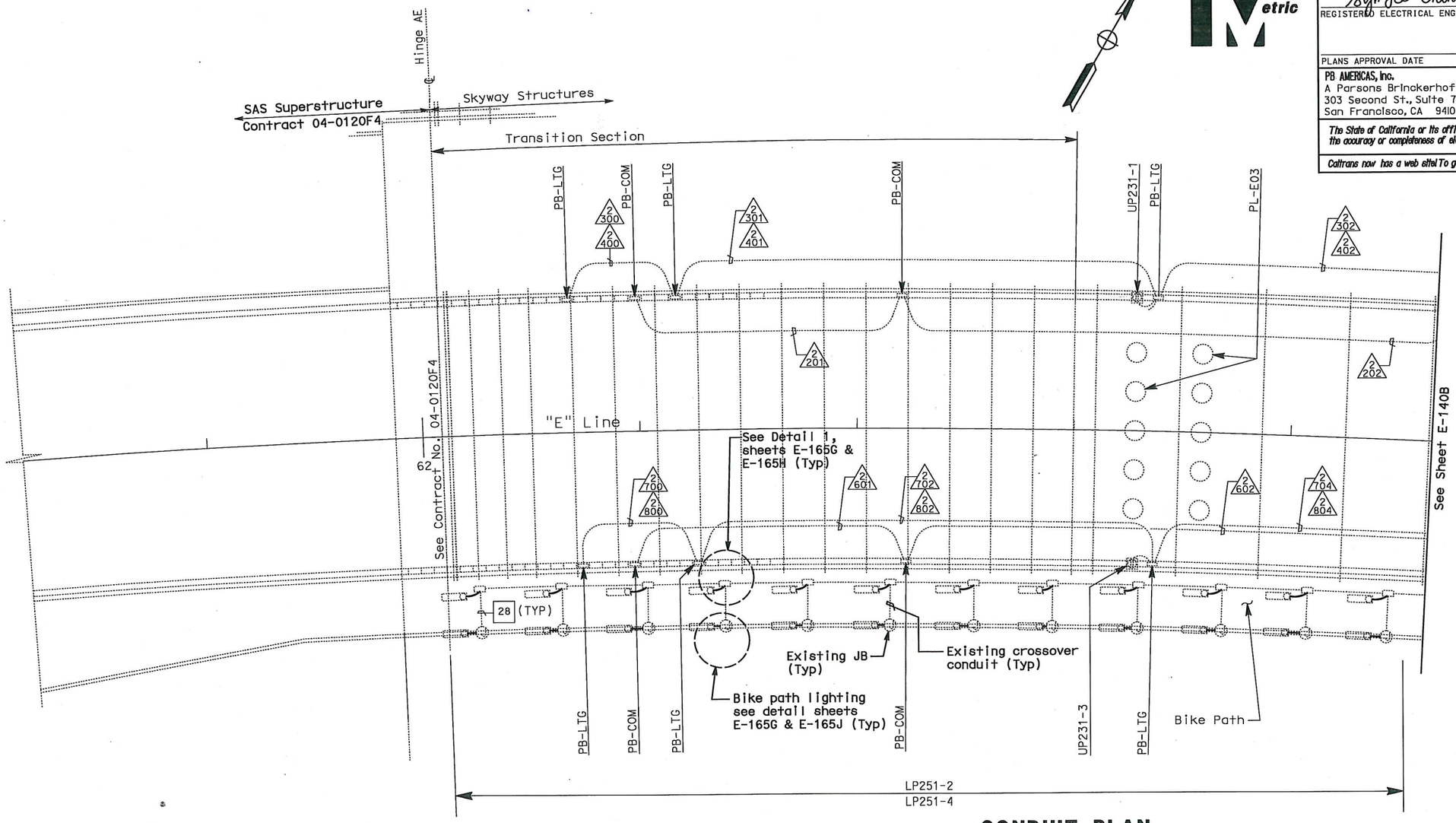

CONDUIT PLAN

NOTES:

1. This plan sheet is a record drawing from Skyway structure. Existing condition shown is diagrammatic and may not completely reflect the actual as-built condition. Contractor to verify as-built prior to commencing the required modification. See Sheet EE-41 from Skyway Structures, contract No. 04-012024.
2. Unless shown in bold, everything else shown was part of Skyway Contract.

REQUEST FOR INFORMATION NOT ADDRESSED IN THIS CCO REMAIN IN FORCE

MARK	DATE	DESCRIPTIONS	BY	CH'D	CCO#
0	05/06/11	MEP INTEGRATION REV. & UPGRADES TO SYSTEMS	TW	RG	163

REVISIONS

CONTRACT CHANGE ORDER NO. 163
SHEET 3 OF 32

SKYWAY ROADWAY LEVEL EASTBOUND LIGHTING AND ELECTRICAL SYSTEMS

SCALE: 1:200

E-140A

STATE OF CALIFORNIA - DEPARTMENT OF TRANSPORTATION
Caltrans

DESIGN OVERSIGHT
BEHZAD GOLEMOHAMMADI

CALCULATED/DESIGNED BY XX
CHECKED BY XX

DATE XX/10 REVISED BY
XX/10 DATE REVISED

LAST REVISION 00-00-00
DATE PLOTTED => 10-MAY-2011
TIME PLOTTED => 16:42

THIS PLAN ACCURATE FOR ELECTRICAL WORK ONLY.

ALL DIMENSIONS ARE IN METERS UNLESS OTHERWISE SHOWN

FOR REDUCED PLANS ORIGINAL SCALE IS IN MILLIMETERS 0 20 40 60 80

DGN FILE =>04-0120f1_0193S01.dgn
USERNAME =>llorico

CU 04251

EA 0120F1

DIST	COUNTY	ROUTE	KILOMETER POST TOTAL PROJECT	SHEET No	TOTAL SHEETS
04	SF,Ala	80	13.2 / 13.9	193S02	1204

Syn Yee Chin 10/28/10
REGISTERED ELECTRICAL ENGINEER DATE

PLANS APPROVAL DATE

REGISTERED PROFESSIONAL ENGINEER SYN YEE CHIN No. 18186 Exp. 09/30/2011 ELECTRICAL STATE OF CALIFORNIA

PB AMERICAS, Inc.
A Parsons Brinckerhoff Company
303 Second St., Suite 700N
San Francisco, CA 94107-1317

The State of California or its officers or agents shall not be responsible for the accuracy or completeness of electronic copies of this plan sheet.

Caltrans now has a web site! To get to the web site, go to http://www.dot.ca.gov

Caltrans Metric

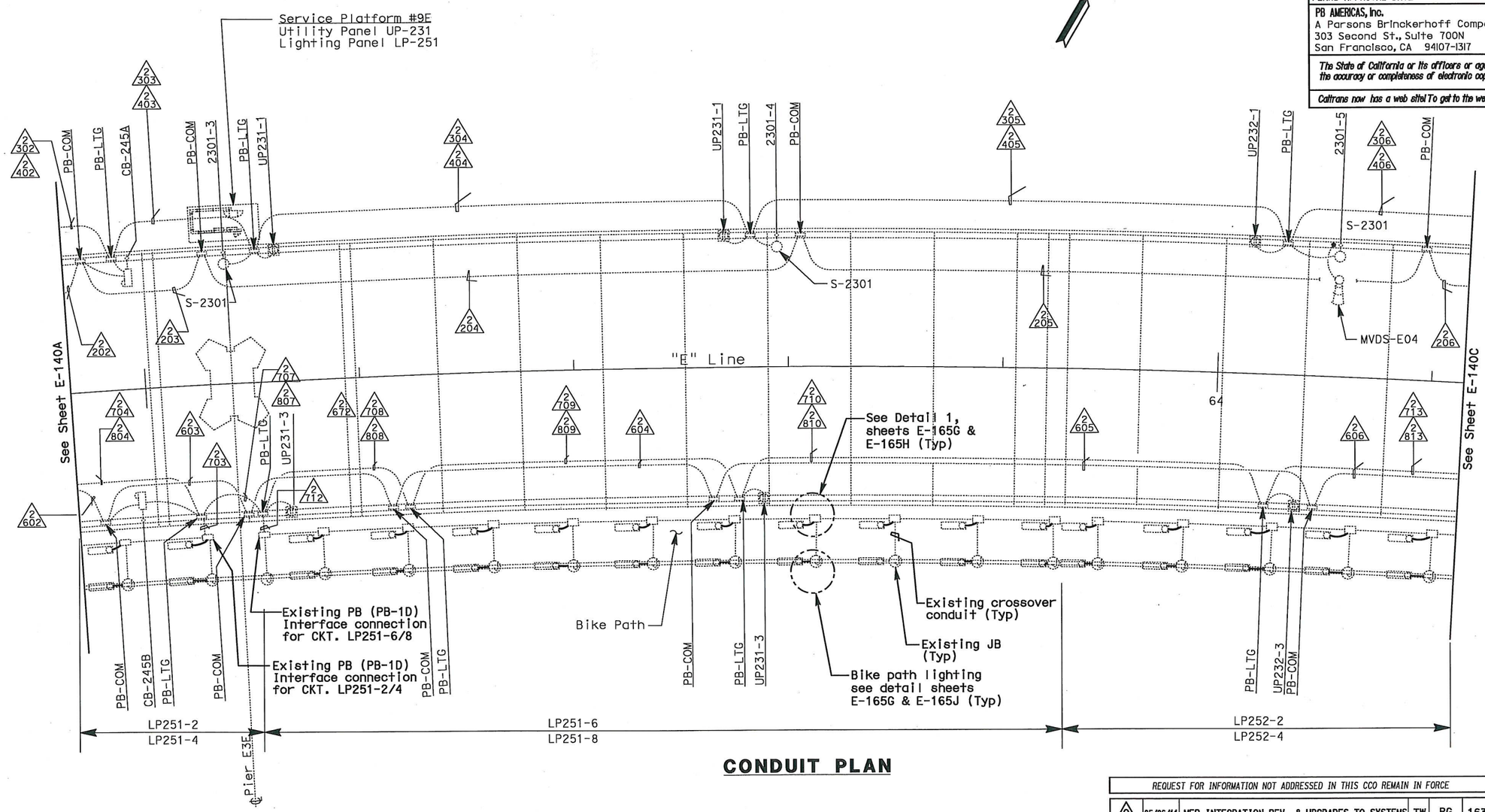

CONDUIT PLAN

REQUEST FOR INFORMATION NOT ADDRESSED IN THIS CCO REMAIN IN FORCE					
0	05/06/11	MEP INTEGRATION REV. & UPGRADES TO SYSTEMS	TW	RG	163
MARK	DATE	DESCRIPTIONS	BY	CH'D	CCO#
		REVISIONS			

CONTRACT CHANGE ORDER NO. 163
SHEET 4 OF 32

NOTES:

1. This plan sheet is a record drawing from Skyway structure. Existing condition shown is diagrammatic and may not completely reflect the actual as-built condition. Contractor to verify as-built prior to commencing the required modification. See Sheet EE-42 from Skyway Structures, contract No. 04-012024.
2. Unless shown in bold, everything else shown was part of Skyway Contract.

SKYWAY ROADWAY LEVEL EASTBOUND LIGHTING AND ELECTRICAL SYSTEMS

SCALE: 1:200

E-140B

THIS PLAN ACCURATE FOR ELECTRICAL WORK ONLY.

ALL DIMENSIONS ARE IN METERS UNLESS OTHERWISE SHOWN

FOR REDUCED PLANS ORIGINAL SCALE IS IN MILLIMETERS 0 20 40 60 80

DGN FILE =>04-0120f1_0193S02.dgn
USERNAME =>llorico

CU 04251 | EA 0120F1

STATE OF CALIFORNIA - DEPARTMENT OF TRANSPORTATION
Caltrans

DESIGN OVERSIGHT: BEHZAD GOLEMOHAMMADI

CALCULATED/DESIGNED BY: XX | DATE XX/10 | REVISED BY
CHECKED BY: XX | XX/10 | DATE REVISED

LAST REVISION 00-00-00 | DATE PLOTTED => 10-MAY-2011 | TIME PLOTTED => 16:42

DIST	COUNTY	ROUTE	KILOMETER POST TOTAL PROJECT	SHEET No	TOTAL SHEETS
04	SF,Ala	80	13.2 / 13.9	193S03	1204

Syn Yee Chin 10/28/10
REGISTERED ELECTRICAL ENGINEER DATE

PLANS APPROVAL DATE

REGISTERED PROFESSIONAL ENGINEER SYN YEE CHIN No. 18186 Exp. 09/30/2011 ELECTRICAL STATE OF CALIFORNIA

PB AMERICAS, Inc.
A Parsons Brinckerhoff Company
303 Second St., Suite 700N
San Francisco, CA 94107-1317

The State of California or its officers or agents shall not be responsible for the accuracy or completeness of electronic copies of this plan sheet.

Caltrans now has a web site! To get to the web site, go to http://www.dot.ca.gov

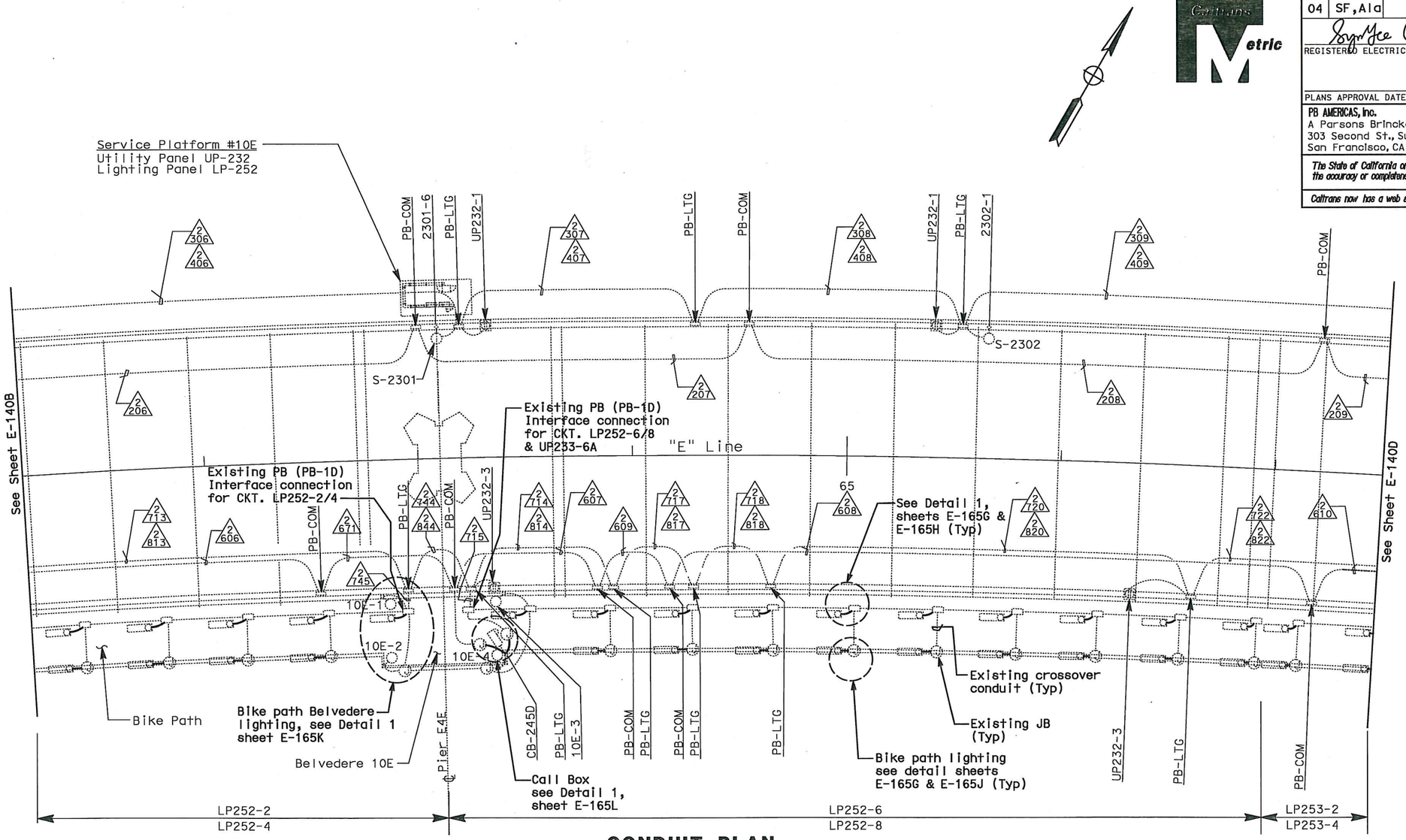

CONDUIT PLAN

REQUEST FOR INFORMATION NOT ADDRESSED IN THIS CCO REMAIN IN FORCE					
0	05/06/11	MEP INTEGRATION REV. & UPGRADES TO SYSTEMS	TW	RG	163
MARK	DATE	DESCRIPTIONS	BY	CH'D	CCO#
REVISIONS					

CONTRACT CHANGE ORDER NO. 163
SHEET 5 OF 32

NOTES:

1. This plan sheet is a record drawing from Skyway structure. Existing condition shown is diagrammatic and may not completely reflect the actual as-built condition. Contractor to verify as-built prior to commencing the required modification. See Sheet EE-43 from Skyway Structures, contract No. 04-012024.
2. Unless shown in bold, everything else shown was part of Skyway Contract.

SKYWAY ROADWAY LEVEL EASTBOUND LIGHTING AND ELECTRICAL SYSTEMS

SCALE: 1:200

E-140C

THIS PLAN ACCURATE FOR ELECTRICAL WORK ONLY.

ALL DIMENSIONS ARE IN METERS UNLESS OTHERWISE SHOWN

FOR REDUCED PLANS ORIGINAL SCALE IS IN MILLIMETERS 0 20 40 60 80

DGN FILE =>04-0120f1_0193S03.dgn
USERNAME =>llorico

CU 04251 | EA 0120F1

LAST REVISION 00-00-00 | DATE PLOTTED => 10-MAY-2011 | TIME PLOTTED => 16:42

STATE OF CALIFORNIA - DEPARTMENT OF TRANSPORTATION
Caltrans

DESIGN OVERSIGHT: BEHZAD GOLEMOHAMMADI

CALCULATED/DESIGNED BY: XX | DATE XX/10 | REVISED BY
CHECKED BY: XX | XX/10 | DATE REVISED

DIST	COUNTY	ROUTE	KILOMETER POST TOTAL PROJECT	SHEET No	TOTAL SHEETS
04	SF,Ala	80	13.2 / 13.9	193S04	1204

Syn Yee Chin 10/28/10
REGISTERED ELECTRICAL ENGINEER DATE

REGISTERED PROFESSIONAL ENGINEER SYN YEE CHIN No. 18186 Exp. 09/30/2011 ELECTRICAL STATE OF CALIFORNIA

PLANS APPROVAL DATE

PB AMERICAS, Inc.
A Parsons Brinckerhoff Company
303 Second St., Suite 700N
San Francisco, CA 94107-1317

The State of California or its officers or agents shall not be responsible for the accuracy or completeness of electronic copies of this plan sheet.

Caltrans now has a web site! To get to the web site, go to http://www.dot.ca.gov

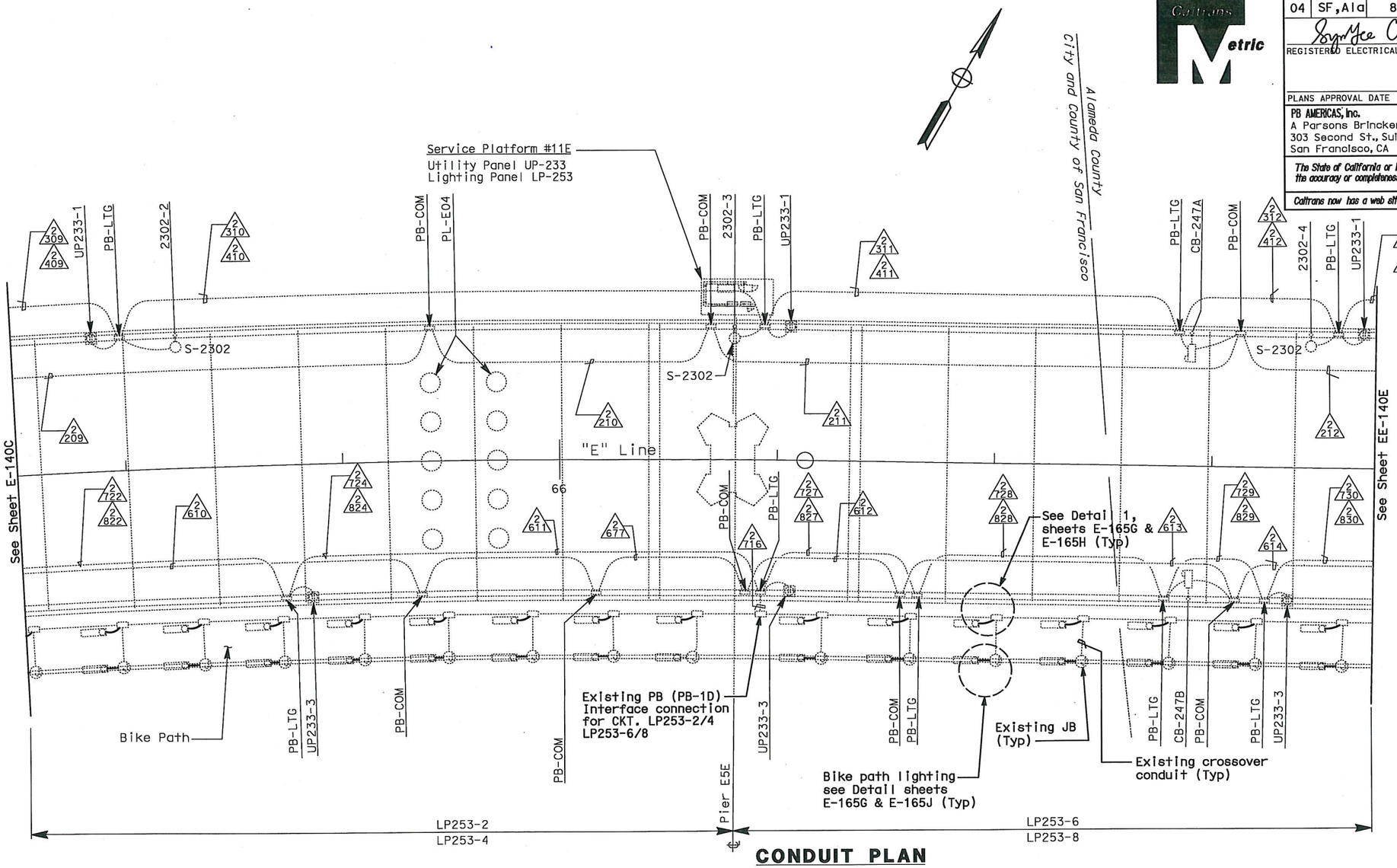

CONDUIT PLAN

NOTES:

1. This plan sheet is a record drawing from Skyway structure. Existing condition shown is diagrammatic and may not completely reflect the actual as-built condition. Contractor to verify as-built prior to commencing the required modification. See Sheet EE-44 from Skyway Structures, contract No. 04-012024.
2. Unless shown in bold, everything else shown was part of Skyway Contract.

REQUEST FOR INFORMATION NOT ADDRESSED IN THIS CCO REMAIN IN FORCE

MARK	DATE	DESCRIPTIONS	BY	CH'D	CCO#
0	05/06/11	MEP INTEGRATION REV. & UPGRADES TO SYSTEMS	TW	RG	163

REVISIONS

CONTRACT CHANGE ORDER NO. 163
SHEET 6 OF 32

SKYWAY ROADWAY LEVEL EASTBOUND LIGHTING AND ELECTRICAL SYSTEMS

SCALE: 1:200

E-140D

STATE OF CALIFORNIA - DEPARTMENT OF TRANSPORTATION
Caltrans

DESIGN OVERSIGHT: BEHZAD GOLEMOHAMMADI
CALCULATED/DESIGNED BY: XX | DATE XX/10 | REVISED BY
CHECKED BY: XX | XX/10 | DATE REVISED

THIS PLAN ACCURATE FOR ELECTRICAL WORK ONLY.

ALL DIMENSIONS ARE IN METERS UNLESS OTHERWISE SHOWN

FOR REDUCED PLANS ORIGINAL SCALE IS IN MILLIMETERS 0 20 40 60 80

DGN FILE =>04-0120f1_0193S04.dgn
USERNAME =>llorico

CU 04251 | EA 0120F1

LAST REVISION 00-00-00
DATE PLOTTED => 10-MAY-2011
TIME PLOTTED => 16:42

DIST	COUNTY	ROUTE	KILOMETER POST TOTAL PROJECT	SHEET No	TOTAL SHEETS
04	SF,Ala	80	13.2 / 13.9	193S05	1204

Syn Yee Chin 10/28/10
REGISTERED ELECTRICAL ENGINEER DATE

PLANS APPROVAL DATE

REGISTERED PROFESSIONAL ENGINEER SYN YEE CHIN No. 18186 Exp. 09/30/2011 ELECTRICAL STATE OF CALIFORNIA

PB AMERICAS, Inc.
A Parsons Brinckerhoff Company
303 Second St., Suite 700N
San Francisco, CA 94107-1317

The State of California or its officers or agents shall not be responsible for the accuracy or completeness of electronic copies of this plan sheet.

Caltrans now has a web site! To get to the web site, go to http://www.dot.ca.gov

Caltrans Metric

REQUEST FOR INFORMATION NOT ADDRESSED IN THIS CCO REMAIN IN FORCE					
0	05/06/11	MEP INTEGRATION REV. & UPGRADES TO SYSTEMS	TW	RG	163
MARK	DATE	DESCRIPTIONS	BY	CH'D	CCO#
		REVISIONS			

CONTRACT CHANGE ORDER NO. 163
SHEET 7 OF 32

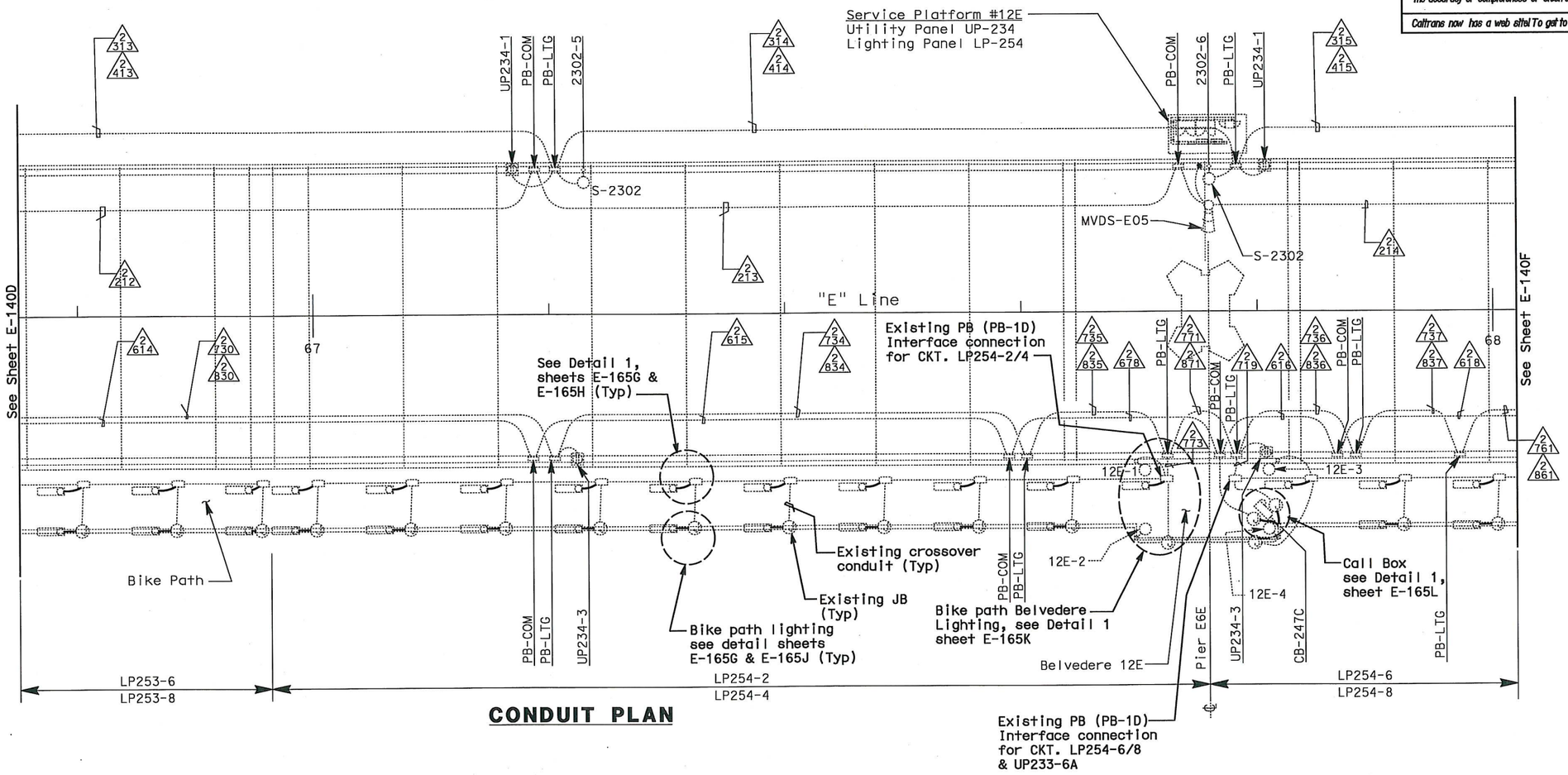

CONDUIT PLAN

NOTES:

1. This plan sheet is a record drawing from Skyway structure. Existing condition shown is diagrammatic and may not completely reflect the actual as-built condition. Contractor to verify as-built prior to commencing the required modification. See Sheet EE-45 from Skyway Structures, contract No. 04-012024.
2. Unless shown in bold, everything else shown was part of Skyway Contract.

SKYWAY ROADWAY LEVEL EASTBOUND LIGHTING AND ELECTRICAL SYSTEMS

SCALE: 1:200

E-140E

STATE OF CALIFORNIA - DEPARTMENT OF TRANSPORTATION
Caltrans

DESIGN OVERSIGHT: BEHZAD GOLEMOHAMMADI

CALCULATED/DESIGNED BY: XX | DATE XX/10 | REVISED BY
CHECKED BY: XX | XX/10 | DATE REVISED

THIS PLAN ACCURATE FOR ELECTRICAL WORK ONLY.

ALL DIMENSIONS ARE IN METERS UNLESS OTHERWISE SHOWN

FOR REDUCED PLANS ORIGINAL SCALE IS IN MILLIMETERS 0 20 40 60 80

DGN FILE =>04-0120f1_0193S05.dgn
USERNAME =>llorico

CU 04251 | EA 0120F1

LAST REVISION 00-00-00 | DATE PLOTTED => 10-MAY-2011 | TIME PLOTTED => 16:42

DIST	COUNTY	ROUTE	KILOMETER POST TOTAL PROJECT	SHEET No	TOTAL SHEETS
04	SF,Ala	80	13.2 / 13.9	193S06	1204

Syn Yee Chin 10/28/10
REGISTERED ELECTRICAL ENGINEER DATE

PLANS APPROVAL DATE

REGISTERED PROFESSIONAL ENGINEER SYN YEE CHIN No. 18186 Exp. 09/30/2011 ELECTRICAL STATE OF CALIFORNIA

PB AMERICAS, Inc.
A Parsons Brinckerhoff Company
303 Second St., Suite 700N
San Francisco, CA 94107-1317

The State of California or its officers or agents shall not be responsible for the accuracy or completeness of electronic copies of this plan sheet.

Caltrans now has a web site! To get to the web site, go to http://www.dot.ca.gov

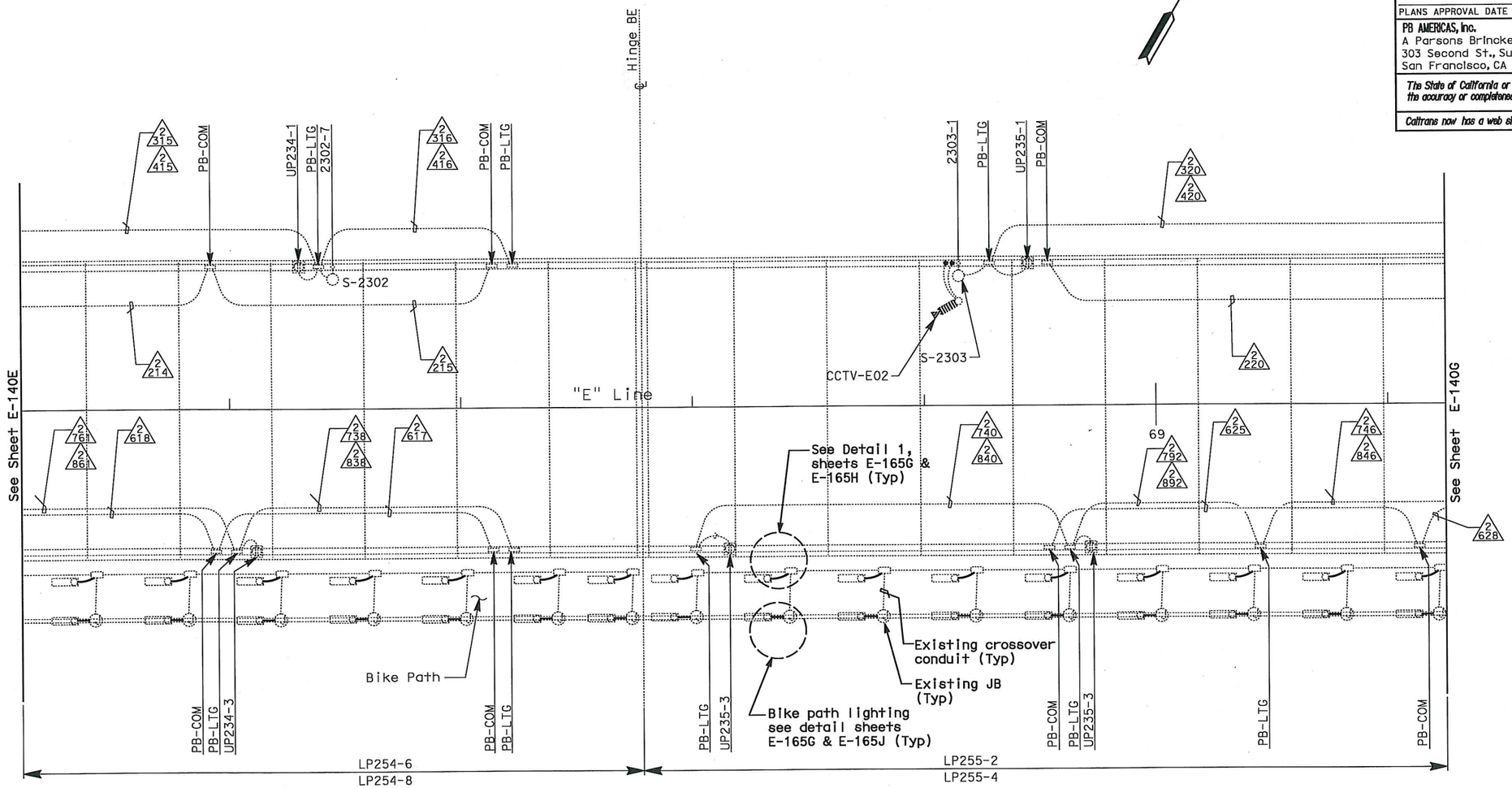

CONDUIT PLAN

NOTES:

1. This plan sheet is a record drawing from Skyway structure. Existing condition shown is diagrammatic and may not completely reflect the actual as-built condition. Contractor to verify as-built prior to commencing the required modification. See Sheet EE-46 from Skyway Structures, contract No. 04-012024.
2. Unless shown in bold, everything else shown was part of Skyway Contract.

REQUEST FOR INFORMATION NOT ADDRESSED IN THIS CCO REMAIN IN FORCE

MARK	DATE	DESCRIPTIONS	BY	CH'D	CCO#
0	05/06/11	MEP INTEGRATION REV. & UPGRADES TO SYSTEMS	TW	RG	163

REVISIONS

CONTRACT CHANGE ORDER NO. 163
SHEET 8 OF 32

SKYWAY ROADWAY LEVEL EASTBOUND LIGHTING AND ELECTRICAL SYSTEMS

SCALE: 1:200

E-140F

STATE OF CALIFORNIA - DEPARTMENT OF TRANSPORTATION
Caltrans
DESIGN OVERSIGHT
BEHZAD GOLEMOHAMMADI
CALCULATED/DESIGNED BY XX DATE XX/10 REVISED BY
CHECKED BY XX XX/10 DATE REVISED

LAST REVISION 00-00-00
DATE PLOTTED => 10-MAY-2011
TIME PLOTTED => 16:42

THIS PLAN ACCURATE FOR ELECTRICAL WORK ONLY.

ALL DIMENSIONS ARE IN METERS UNLESS OTHERWISE SHOWN

FOR REDUCED PLANS ORIGINAL SCALE IS IN MILLIMETERS 0 20 40 60 80

DGN FILE =>04-0120f1_0193S06.dgn
USERNAME =>llorico

CU 04251

EA 0120F1

DIST	COUNTY	ROUTE	KILOMETER POST TOTAL PROJECT	SHEET No	TOTAL SHEETS
04	SF,Ala	80	13.2 / 13.9	193S07	1204

Syn Yee Chin 10/28/10
REGISTERED ELECTRICAL ENGINEER DATE

REGISTERED PROFESSIONAL ENGINEER SYN YEE CHIN No. 18186 Exp. 09/30/2011 ELECTRICAL STATE OF CALIFORNIA

PLANS APPROVAL DATE

PB AMERICAS, Inc.
A Parsons Brinckerhoff Company
303 Second St., Suite 700N
San Francisco, CA 94107-1317

The State of California or its officers or agents shall not be responsible for the accuracy or completeness of electronic copies of this plan sheet.

Caltrans now has a web site! To get to the web site, go to http://www.dot.ca.gov

Caltrans Metric

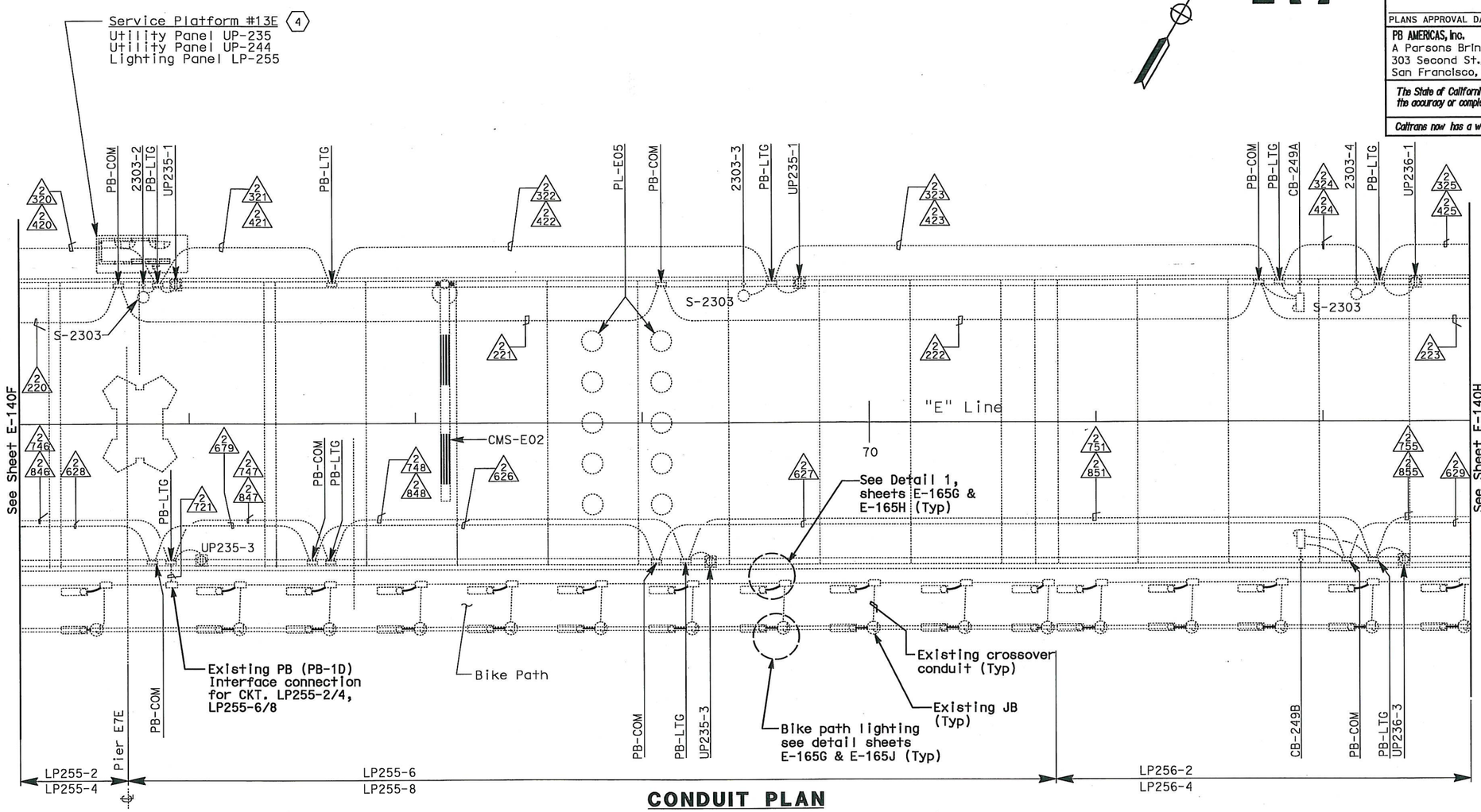

CONDUIT PLAN

REQUEST FOR INFORMATION NOT ADDRESSED IN THIS CCO REMAIN IN FORCE					
0	05/06/11	MEP INTEGRATION REV. & UPGRADES TO SYSTEMS	TW	RG	163
MARK	DATE	DESCRIPTIONS	BY	CH'D	CCO#
REVISIONS					

CONTRACT CHANGE ORDER NO. 163
SHEET 9 OF 32

NOTES:

1. This plan sheet is a record drawing from Skyway structure. Existing condition shown is diagrammatic and may not completely reflect the actual as-built condition. Contractor to verify as-built prior to commencing the required modification. See Sheet EE-47 from Skyway Structures, contract No. 04-012024.
2. Unless shown in bold, everything else shown was part of Skyway Contract.

SKYWAY ROADWAY LEVEL EASTBOUND LIGHTING AND ELECTRICAL SYSTEMS

SCALE: 1:200

E-140G

THIS PLAN ACCURATE FOR ELECTRICAL WORK ONLY.

ALL DIMENSIONS ARE IN METERS UNLESS OTHERWISE SHOWN

FOR REDUCED PLANS ORIGINAL SCALE IS IN MILLIMETERS 0 20 40 60 80

DGN FILE =>04-0120f1_0193S07.dgn
USERNAME =>llorico

CU 04251

EA 0120F1

STATE OF CALIFORNIA - DEPARTMENT OF TRANSPORTATION
Caltrans

DESIGN OVERSIGHT: BEHZAD GOLEMOHAMMADI

CALCULATED/DESIGNED BY: XX | DATE XX/10 | REVISED BY
CHECKED BY: XX | XX/10 | DATE REVISED

LAST REVISION 00-00-00
DATE PLOTTED => 10-MAY-2011
TIME PLOTTED => 16:42

DIST	COUNTY	ROUTE	KILOMETER POST TOTAL PROJECT	SHEET No	TOTAL SHEETS
04	SF,Ala	80	13.2 / 13.9	193S08	1204

Syn Yee Chin 10/28/10
REGISTERED ELECTRICAL ENGINEER DATE

PLANS APPROVAL DATE

REGISTERED PROFESSIONAL ENGINEER SYN YEE CHIN No. 18186 Exp. 09/30/2011 ELECTRICAL STATE OF CALIFORNIA

PB AMERICAS, Inc.
A Parsons Brinckerhoff Company
303 Second St., Suite 700N
San Francisco, CA 94107-1317

The State of California or its officers or agents shall not be responsible for the accuracy or completeness of electronic copies of this plan sheet.

Caltrans now has a web site! To get to the web site, go to http://www.dot.ca.gov

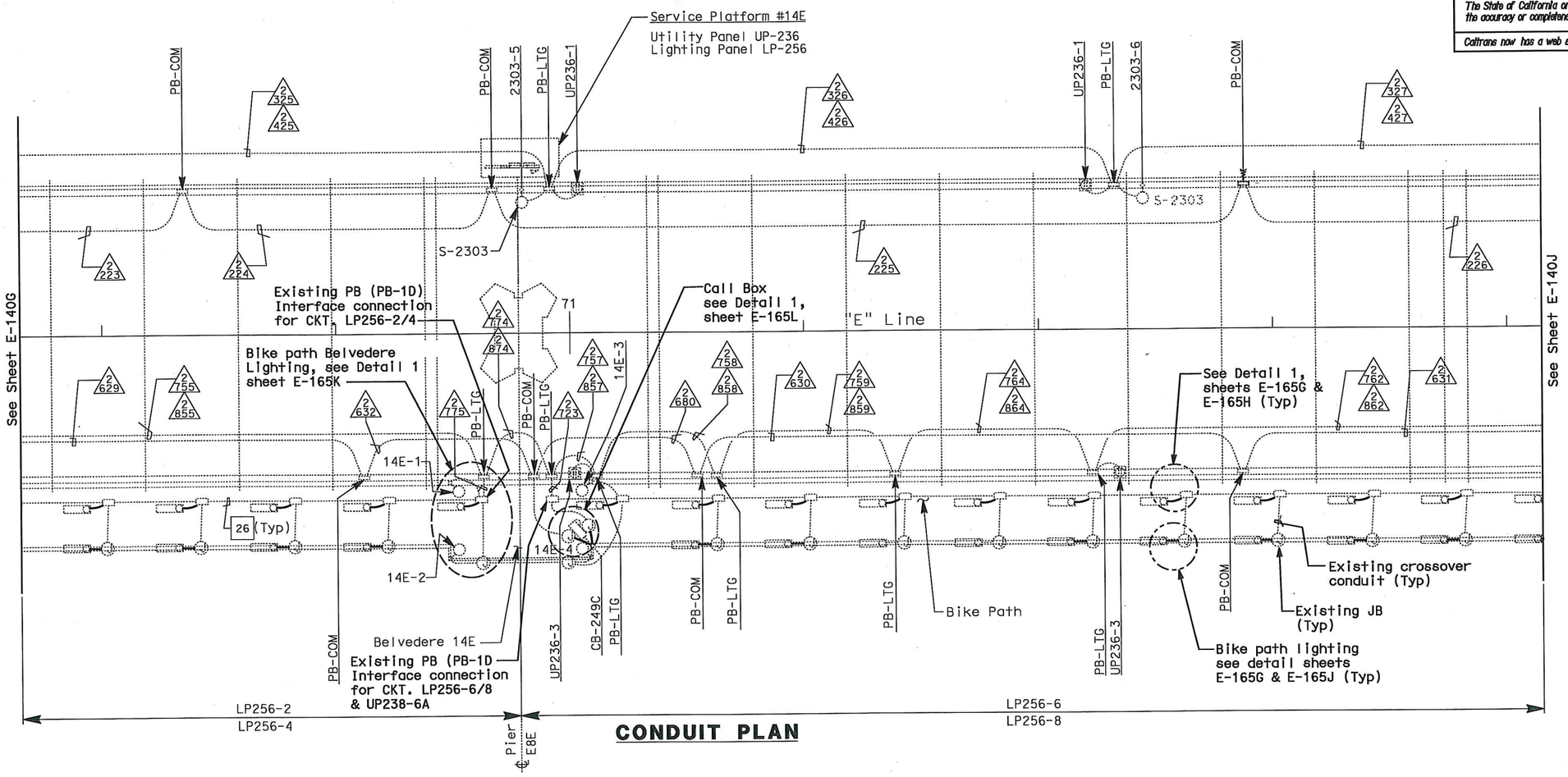

CONDUIT PLAN

REQUEST FOR INFORMATION NOT ADDRESSED IN THIS CCO REMAIN IN FORCE					
0	05/06/11	MEP INTEGRATION REV. & UPGRADES TO SYSTEMS	TW	RG	163
MARK	DATE	DESCRIPTIONS	BY	CH'D	CCO#
		REVISIONS			

CONTRACT CHANGE ORDER NO. 163
SHEET 10 OF 32

NOTES:

1. This plan sheet is a record drawing from Skyway structure. Existing condition shown is diagrammatic and may not completely reflect the actual as-built condition. Contractor to verify as-built prior to commencing the required modification. See Sheet EE-48 from Skyway Structures, contract No. 04-012024.
2. Unless shown in bold, everything else shown was part of Skyway Contract.

THIS PLAN ACCURATE FOR ELECTRICAL WORK ONLY.

ALL DIMENSIONS ARE IN METERS UNLESS OTHERWISE SHOWN

FOR REDUCED PLANS ORIGINAL SCALE IS IN MILLIMETERS 0 20 40 60 80

DGN FILE =>04-0120F1_0193S08.dgn
USERNAME =>llorico

CU 04251

EA 0120F1

SKYWAY ROADWAY LEVEL EASTBOUND LIGHTING AND ELECTRICAL SYSTEMS

SCALE: 1:200

E-140H

STATE OF CALIFORNIA - DEPARTMENT OF TRANSPORTATION
Caltrans

DESIGN OVERSIGHT
BEHZAD GOLEMOHAMMADI

CALCULATED/DESIGNED BY XX
CHECKED BY XX

DATE XX/10 REVISED BY
XX/10 DATE REVISED

LAST REVISION 00-00-00
DATE PLOTTED => 10-MAY-2011
TIME PLOTTED => 16:42

DIST	COUNTY	ROUTE	KILOMETER POST TOTAL PROJECT	SHEET No	TOTAL SHEETS
04	SF,Ala	80	13.2 / 13.9	193S09	1204

Syn Yee Chin 10/28/10
REGISTERED ELECTRICAL ENGINEER DATE

PLANS APPROVAL DATE

REGISTERED PROFESSIONAL ENGINEER
SYN YEE CHIN
No. 18186
Exp. 09/30/2011
ELECTRICAL
STATE OF CALIFORNIA

PB AMERICAS, Inc.
A Parsons Brinckerhoff Company
303 Second St., Suite 700N
San Francisco, CA 94107-1317

The State of California or its officers or agents shall not be responsible for the accuracy or completeness of electronic copies of this plan sheet.

Caltrans now has a web site! To get to the web site, go to http://www.dot.ca.gov

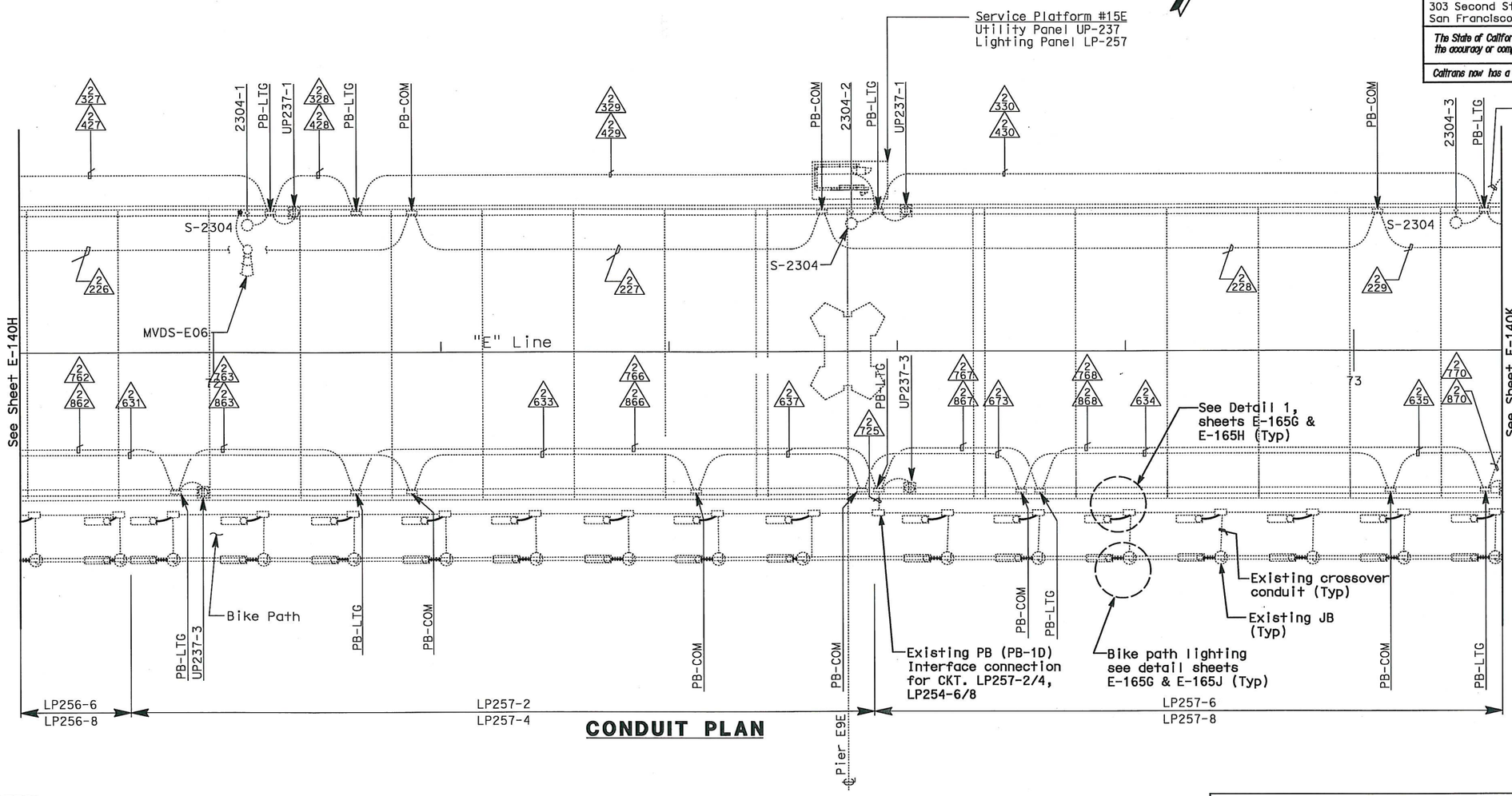

CONDUIT PLAN

NOTES:

1. This plan sheet is a record drawing from Skyway structure. Existing condition shown is diagrammatic and may not completely reflect the actual as-built condition. Contractor to verify as-built prior to commencing the required modification. See Sheet EE-49 from Skyway Structures, contract No. 04-012024.
2. Unless shown in bold, everything else shown was part of Skyway Contract.

REQUEST FOR INFORMATION NOT ADDRESSED IN THIS CCO REMAIN IN FORCE

MARK	DATE	DESCRIPTIONS	BY	CH'D	CCO#
0	05/06/11	MEP INTEGRATION REV. & UPGRADES TO SYSTEMS	TW	RG	163

REVISIONS

CONTRACT CHANGE ORDER NO. 163
SHEET 11 OF 32

SKYWAY ROADWAY LEVEL EASTBOUND LIGHTING AND ELECTRICAL SYSTEMS

SCALE: 1:200

E-140J

THIS PLAN ACCURATE FOR ELECTRICAL WORK ONLY.

ALL DIMENSIONS ARE IN METERS UNLESS OTHERWISE SHOWN

FOR REDUCED PLANS ORIGINAL SCALE IS IN MILLIMETERS 0 20 40 60 80

DGN FILE =>04-0120f1_0193S09.dgn
USERNAME =>llorico

CU 04251 EA 0120F1

STATE OF CALIFORNIA - DEPARTMENT OF TRANSPORTATION
Caltrans

DESIGN OVERSIGHT
BEHZAD GOLEMOHAMMADI

CALCULATED/DESIGNED BY XX
CHECKED BY XX

DATE XX/10 REVISED BY
XX/10 DATE REVISED

LAST REVISION 00-00-00
DATE PLOTTED => 10-MAY-2011
TIME PLOTTED => 16:42

DIST	COUNTY	ROUTE	KILOMETER POST TOTAL PROJECT	SHEET No	TOTAL SHEETS
04	SF,Ala	80	13.2 / 13.9	193S10	1204

Syn Yee Chin 10/28/10
REGISTERED ELECTRICAL ENGINEER DATE

REGISTERED PROFESSIONAL ENGINEER SYN YEE CHIN No. 18186 Exp. 09/30/2011 ELECTRICAL STATE OF CALIFORNIA

PLANS APPROVAL DATE

PB AMERICAS, Inc.
A Parsons Brinckerhoff Company
303 Second St., Suite 700N
San Francisco, CA 94107-1317

The State of California or its officers or agents shall not be responsible for the accuracy or completeness of electronic copies of this plan sheet.

Caltrans now has a web site! To get to the web site, go to http://www.dot.ca.gov

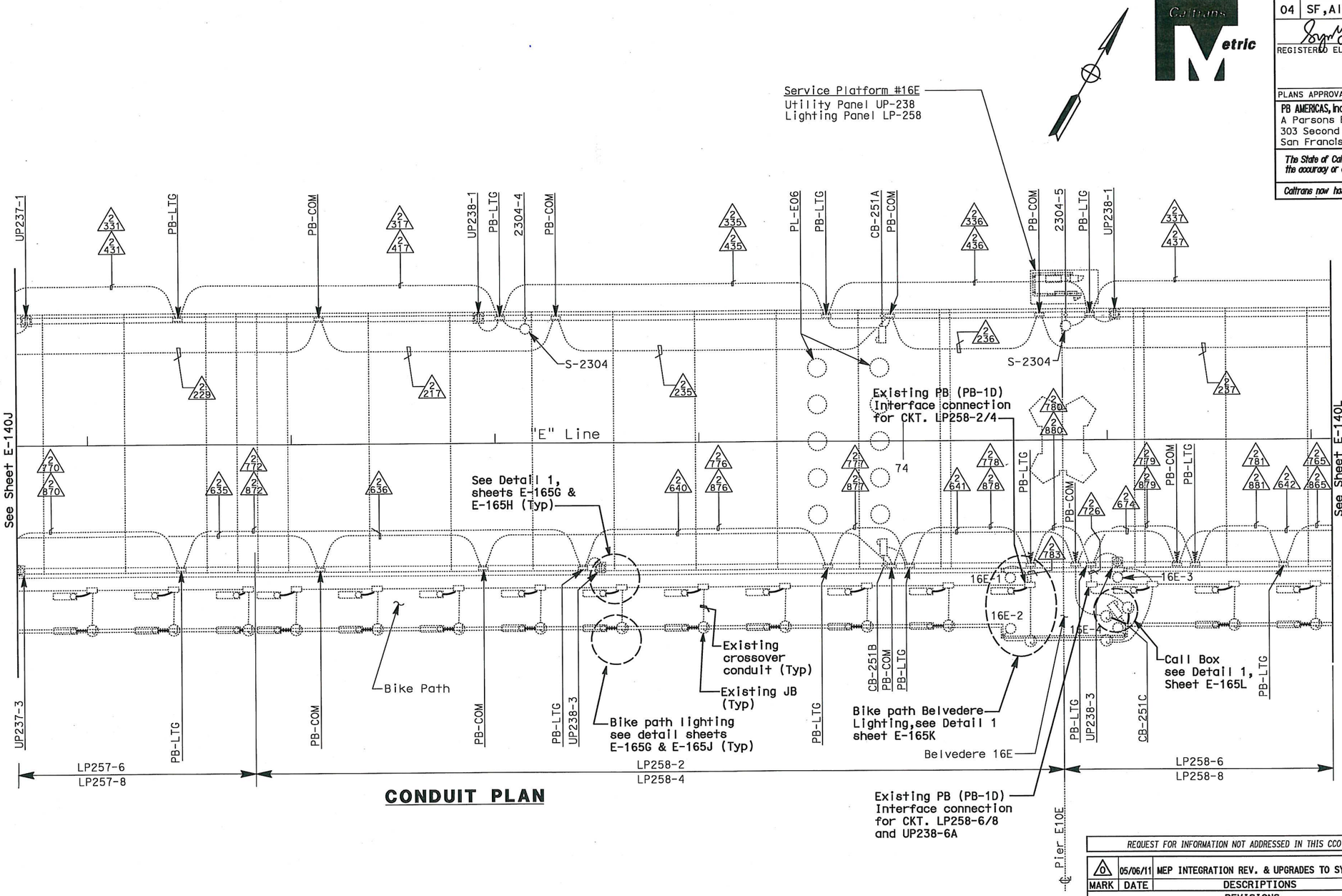

CONDUIT PLAN

NOTES:

1. This plan sheet is a record drawing from Skyway structure. Existing condition shown is diagrammatic and may not completely reflect the actual as-built condition. Contractor to verify as-built prior to commencing the required modification. See Sheet EE-50 from Skyway Structures, contract No. 04-012024.
2. Unless shown in bold, everything else shown was part of Skyway Contract.

REQUEST FOR INFORMATION NOT ADDRESSED IN THIS CCO REMAIN IN FORCE

MARK	DATE	DESCRIPTIONS	BY	CH'D	CCO#
0	05/06/11	MEP INTEGRATION REV. & UPGRADES TO SYSTEMS	TW	RG	163

REVISIONS

CONTRACT CHANGE ORDER NO. 163
SHEET 12 OF 32

SKYWAY ROADWAY LEVEL EASTBOUND LIGHTING AND ELECTRICAL SYSTEMS

SCALE: 1:200

E-140K

THIS PLAN ACCURATE FOR ELECTRICAL WORK ONLY.

ALL DIMENSIONS ARE IN METERS UNLESS OTHERWISE SHOWN

FOR REDUCED PLANS ORIGINAL SCALE IS IN MILLIMETERS 0 20 40 60 80

DGN FILE =>04-0120f1_0193S10.dgn
USERNAME =>llorico

CU 04251

EA 0120F1

LAST REVISION 00-00-00
DATE PLOTTED => 10-MAY-2011
TIME PLOTTED => 16:42

STATE OF CALIFORNIA - DEPARTMENT OF TRANSPORTATION
Caltrans

DESIGN OVERSIGHT: BEHZAD GOLEMOHAMMADI
CALCULATED/DESIGNED BY: XX DATE XX/10 REVISED BY
CHECKED BY: XX XX/10 DATE REVISED

DIST	COUNTY	ROUTE	KILOMETER POST TOTAL PROJECT	SHEET No	TOTAL SHEETS
04	SF,Ala	80	13.2 / 13.9	193S11	1204

Syn Yee Chin 10/28/10
REGISTERED ELECTRICAL ENGINEER DATE

PLANS APPROVAL DATE

REGISTERED PROFESSIONAL ENGINEER SYN YEE CHIN No. 18186 Exp. 09/30/2011 ELECTRICAL STATE OF CALIFORNIA

PB AMERICAS, Inc.
A Parsons Brinckerhoff Company
303 Second St., Suite 700N
San Francisco, CA 94107-1317

The State of California or its officers or agents shall not be responsible for the accuracy or completeness of electronic copies of this plan sheet.

Caltrans now has a web site! To get to the web site, go to http://www.dot.ca.gov

Caltrans Metric

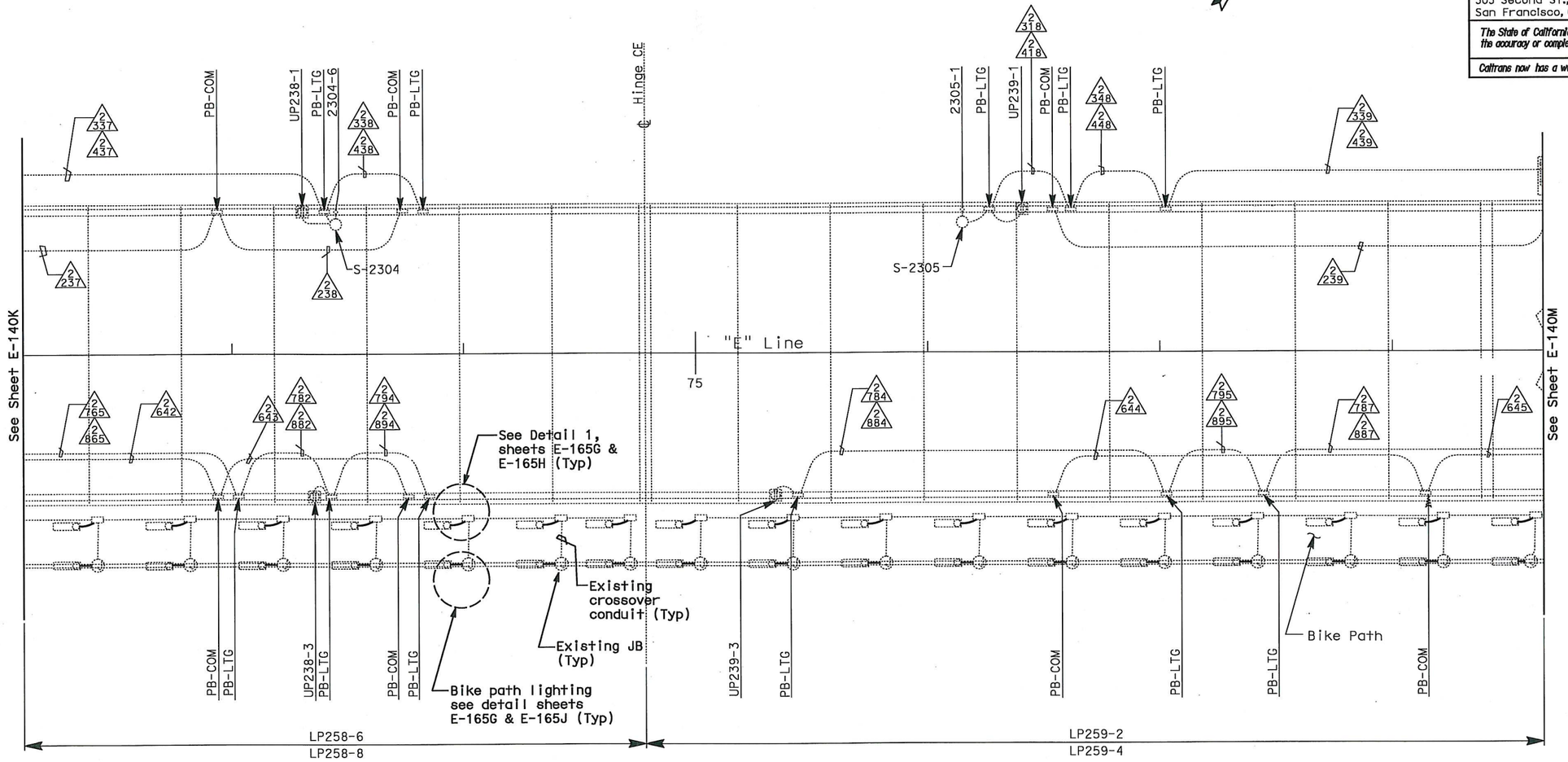

CONDUIT PLAN

NOTES:

1. This plan sheet is a record drawing from Skyway structure. Existing condition shown is diagrammatic and may not completely reflect the actual as-built condition. Contractor to verify as-built prior to commencing the required modification. See Sheet EE-51 from Skyway Structures, contract No. 04-012024.
2. Unless shown in bold, everything else shown was part of Skyway Contract.

REQUEST FOR INFORMATION NOT ADDRESSED IN THIS CCO REMAIN IN FORCE

MARK	DATE	DESCRIPTIONS	BY	CH'D	CCO#
0	05/06/11	MEP INTEGRATION REV. & UPGRADES TO SYSTEMS	TW	RG	163

REVISIONS

CONTRACT CHANGE ORDER NO. 163
SHEET 13 OF 32

SKYWAY ROADWAY LEVEL EASTBOUND LIGHTING AND ELECTRICAL SYSTEMS

SCALE: 1:200

E-140L

CALCULATED/ DESIGNED BY	XX	DATE XX/10	REVISED BY
CHECKED BY	XX	XX/10	DATE REVISED

DESIGN OVERSIGHT
BEHZAD GOLEMOHAMMADI

STATE OF CALIFORNIA - DEPARTMENT OF TRANSPORTATION
Caltrans

LAST REVISION 00-00-00
DATE PLOTTED => 10-MAY-2011
TIME PLOTTED => 16:42

THIS PLAN ACCURATE FOR ELECTRICAL WORK ONLY.

ALL DIMENSIONS ARE IN METERS UNLESS OTHERWISE SHOWN

FOR REDUCED PLANS ORIGINAL SCALE IS IN MILLIMETERS 0 20 40 60 80

DGN FILE =>04-0120f1_0193S11.dgn
USERNAME =>llorico

CU 04251

EA 0120F1

DIST	COUNTY	ROUTE	KILOMETER POST TOTAL PROJECT	SHEET No	TOTAL SHEETS
04	SF,Ala	80	13.2 / 13.9	193S12	1204

Syn Yee Chin 10/28/10
REGISTERED ELECTRICAL ENGINEER DATE

REGISTERED PROFESSIONAL ENGINEER SYN YEE CHIN No. 18186 Exp. 09/30/2011 ELECTRICAL STATE OF CALIFORNIA

PLANS APPROVAL DATE

PB AMERICAS, Inc.
A Parsons Brinckerhoff Company
303 Second St., Suite 700N
San Francisco, CA 94107-1317

The State of California or its officers or agents shall not be responsible for the accuracy or completeness of electronic copies of this plan sheet.

Caltrans now has a web site! To get to the web site, go to http://www.dot.ca.gov

Caltrans Metric

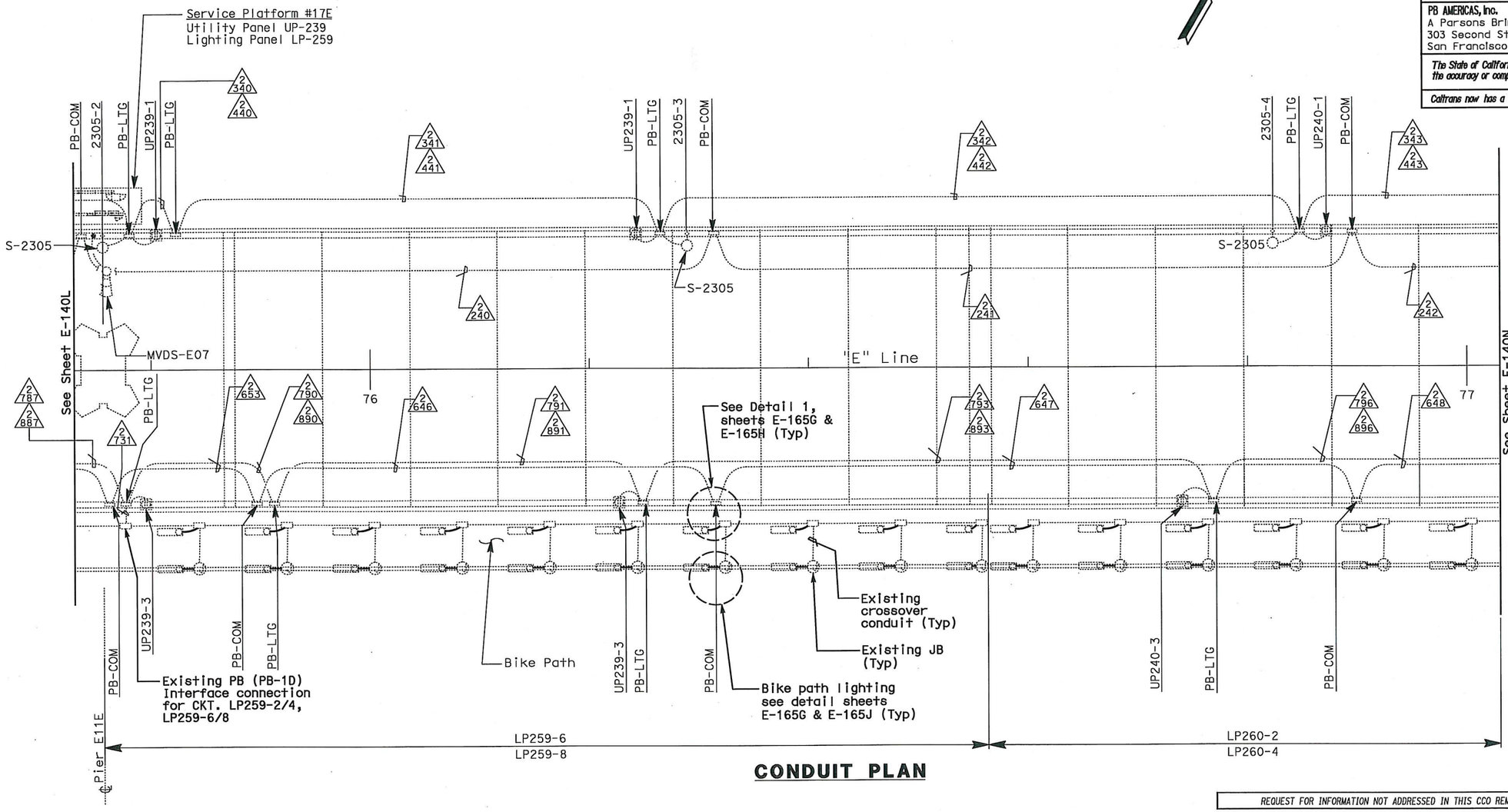

CONDUIT PLAN

NOTES:

1. This plan sheet is a record drawing from Skyway structure. Existing condition shown is diagrammatic and may not completely reflect the actual as-built condition. Contractor to verify as-built prior to commencing the required modification. See Sheet EE-52 from Skyway Structures, contract No. 04-012024.

2. Unless shown in bold, everything else shown was part of Skyway Contract.

REQUEST FOR INFORMATION NOT ADDRESSED IN THIS CCO REMAIN IN FORCE

MARK	DATE	DESCRIPTIONS	BY	CH'D	CCO#
0	05/06/11	MEP INTEGRATION REV. & UPGRADES TO SYSTEMS	TW	RG	163

REVISIONS

CONTRACT CHANGE ORDER NO. 163
SHEET 14 OF 32

SKYWAY ROADWAY LEVEL EASTBOUND LIGHTING AND ELECTRICAL SYSTEMS

SCALE: 1:200

E-140M

DATE XX/10	REVISED BY	CALCULATED/ DESIGNED BY	XX	DESIGN OVERSIGHT
XX/10	DATE REVISED	CHECKED BY	XX	BEHZAD GOLEMOHAMMADI

STATE OF CALIFORNIA - DEPARTMENT OF TRANSPORTATION
Caltrans

LAST REVISION 00-00-00
DATE PLOTTED => 10-MAY-2011
TIME PLOTTED => 16:43

THIS PLAN ACCURATE FOR ELECTRICAL WORK ONLY.

ALL DIMENSIONS ARE IN METERS UNLESS OTHERWISE SHOWN

FOR REDUCED PLANS ORIGINAL SCALE IS IN MILLIMETERS 0 20 40 60 80

DGN FILE =>04-0120f1_0193S12.dgn
USERNAME =>llorico

CU 04251

EA 0120F1

DIST	COUNTY	ROUTE	KILOMETER POST TOTAL PROJECT	SHEET No	TOTAL SHEETS
04	SF,Ala	80	13.2 / 13.9	193S13	1204

Syn Yee Chin 10/28/10
REGISTERED ELECTRICAL ENGINEER DATE

PLANS APPROVAL DATE

REGISTERED PROFESSIONAL ENGINEER SYN YEE CHIN No. 18186 Exp. 09/30/2011 ELECTRICAL STATE OF CALIFORNIA

PB AMERICAS, Inc.
A Parsons Brinckerhoff Company
303 Second St., Suite 700N
San Francisco, CA 94107-1317

The State of California or its officers or agents shall not be responsible for the accuracy or completeness of electronic copies of this plan sheet.

Caltrans now has a web site! To get to the web site, go to http://www.dot.ca.gov

Caltrans Metric

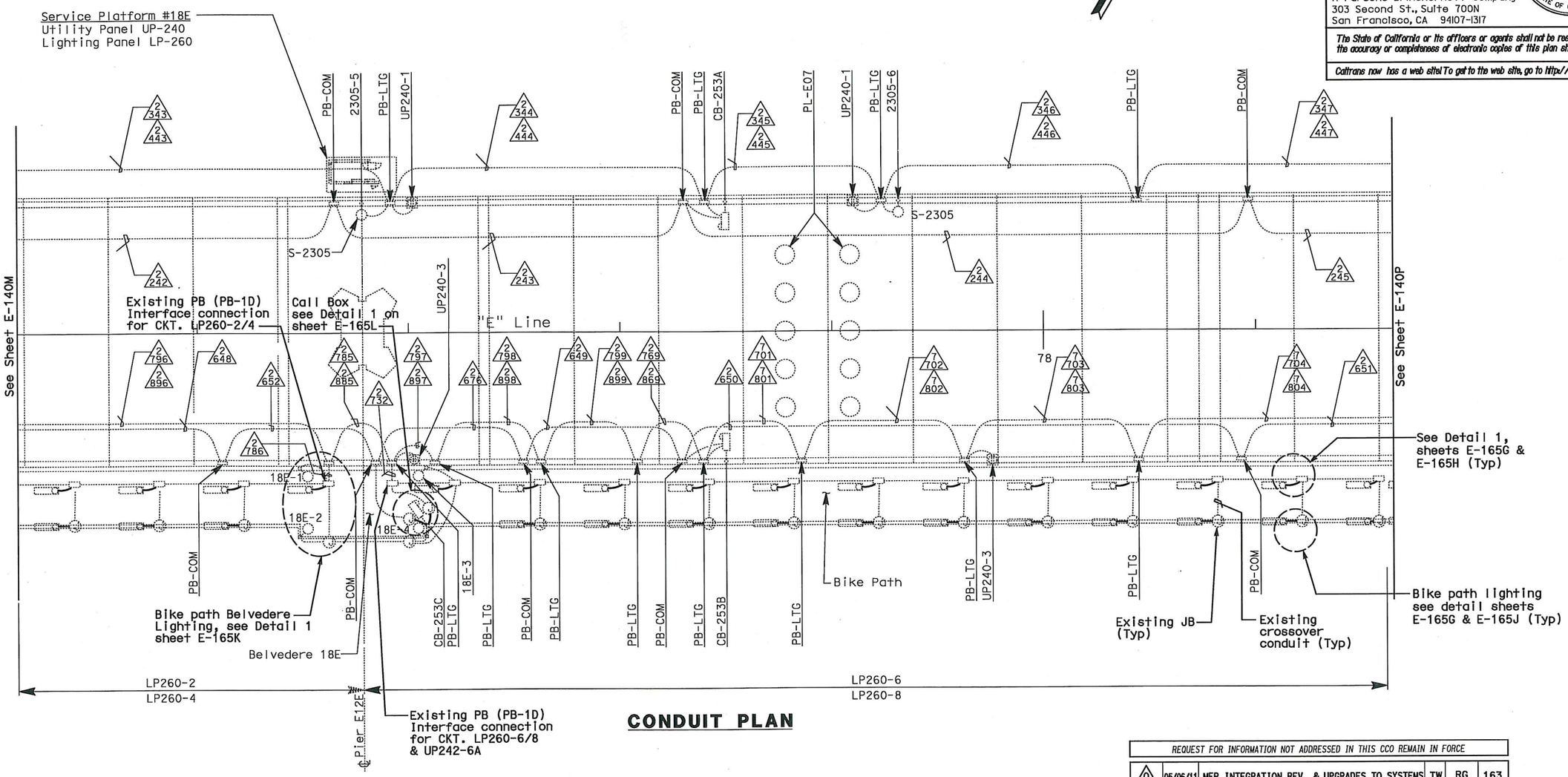

CONDUIT PLAN

REQUEST FOR INFORMATION NOT ADDRESSED IN THIS CCO REMAIN IN FORCE					
0	05/06/11	MEP INTEGRATION REV. & UPGRADES TO SYSTEMS	TW	RG	163
MARK	DATE	DESCRIPTIONS	BY	CH'D	CCO#
		REVISIONS			

CONTRACT CHANGE ORDER NO. 163
SHEET 15 OF 32

NOTES:

1. This plan sheet is a record drawing from Skyway structure. Existing condition shown is diagrammatic and may not completely reflect the actual as-built condition. Contractor to verify as-built prior to commencing the required modification. See Sheet EE-53 from Skyway Structures, contract No. 04-012024.
2. Unless shown in bold, everything else shown was part of Skyway Contract.

THIS PLAN ACCURATE FOR ELECTRICAL WORK ONLY.

ALL DIMENSIONS ARE IN METERS UNLESS OTHERWISE SHOWN

SKYWAY ROADWAY LEVEL EASTBOUND LIGHTING AND ELECTRICAL SYSTEMS

SCALE: 1:200

E-140N

STATE OF CALIFORNIA - DEPARTMENT OF TRANSPORTATION
Caltrans

DESIGN OVERSIGHT: BEHZAD GOLEMOHAMMADI

CALCULATED/DESIGNED BY: XX | DATE XX/10 | REVISED BY
CHECKED BY: XX | XX/10 | DATE REVISED

LAST REVISION 00-00-00 | DATE PLOTTED => 10-MAY-2011 | TIME PLOTTED => 16:43

FOR REDUCED PLANS ORIGINAL SCALE IS IN MILLIMETERS 0 20 40 60 80

DGN FILE =>04-0120f1_0193S13.dgn
USERNAME =>llorico

CU 04251 | EA 0120F1

DIST	COUNTY	ROUTE	KILOMETER POST TOTAL PROJECT	SHEET No	TOTAL SHEETS
04	SF,Ala	80	13.2 / 13.9	193S14	1204

Syn Yee Chin 10/28/10
REGISTERED ELECTRICAL ENGINEER DATE

PLANS APPROVAL DATE

REGISTERED PROFESSIONAL ENGINEER
SYN YEE CHIN
No. 18186
Exp. 09/30/2011
ELECTRICAL
STATE OF CALIFORNIA

PB AMERICAS, Inc.
A Parsons Brinckerhoff Company
303 Second St., Suite 700N
San Francisco, CA 94107-1317

The State of California or its officers or agents shall not be responsible for the accuracy or completeness of electronic copies of this plan sheet.

Caltrans now has a web site! To get to the web site, go to http://www.dot.ca.gov

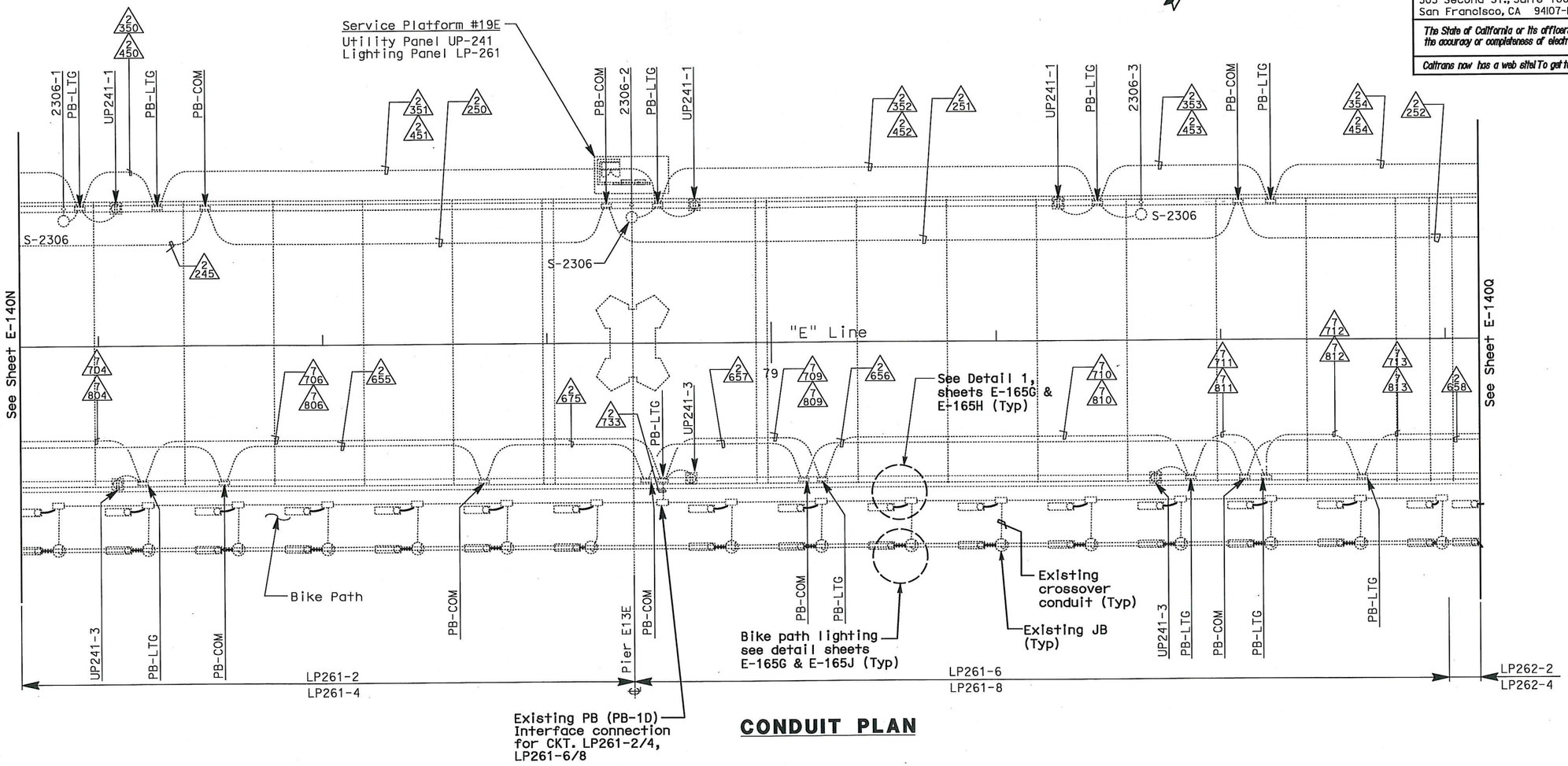

CONDUIT PLAN

NOTES:

1. This plan sheet is a record drawing from Skyway structure. Existing condition shown is diagrammatic and may not completely reflect the actual as-built condition. Contractor to verify as-built prior to commencing the required modification. See Sheet EE-54 from Skyway Structures, contract No. 04-012024.
2. Unless shown in bold, everything else shown was part of Skyway Contract.

REQUEST FOR INFORMATION NOT ADDRESSED IN THIS CCO REMAIN IN FORCE

MARK	DATE	DESCRIPTIONS	BY	CH'D	CCO#
0	05/06/11	MEP INTEGRATION REV. & UPGRADES TO SYSTEMS	TW	RG	163

REVISIONS

CONTRACT CHANGE ORDER NO. 163
SHEET 16 OF 32

SKYWAY ROADWAY LEVEL EASTBOUND LIGHTING AND ELECTRICAL SYSTEMS

SCALE: 1:200

E-140P

DATE XX/10	REVISED BY	DATE XX/10	REVISED BY
XX	CALCULATED/DESIGNED BY	XX	CHECKED BY
	DESIGN OVERSIGHT		
	BEHZAD GOLEMOHAMMADI		

STATE OF CALIFORNIA - DEPARTMENT OF TRANSPORTATION

THIS PLAN ACCURATE FOR ELECTRICAL WORK ONLY.

ALL DIMENSIONS ARE IN METERS UNLESS OTHERWISE SHOWN

FOR REDUCED PLANS ORIGINAL SCALE IS IN MILLIMETERS 0 20 40 60 80

DGN FILE =>04-0120f1_0193S14.dgn
USERNAME =>llorico

CU 04251 | EA 0120F1

LAST REVISION 00-00-00 | DATE PLOTTED => 10-MAY-2011 | TIME PLOTTED => 16:43

DIST	COUNTY	ROUTE	KILOMETER POST TOTAL PROJECT	SHEET No	TOTAL SHEETS
04	SF,Ala	80	13.2 / 13.9	193S15	1204

Syn Yee Chin 10/28/10
REGISTERED ELECTRICAL ENGINEER DATE

REGISTERED PROFESSIONAL ENGINEER
SYN YEE CHIN
No. 18186
Exp. 09/30/2011
ELECTRICAL
STATE OF CALIFORNIA

PLANS APPROVAL DATE

PB AMERICAS, Inc.
A Parsons Brinckerhoff Company
303 Second St., Suite 700N
San Francisco, CA 94107-1317

The State of California or its officers or agents shall not be responsible for the accuracy or completeness of electronic copies of this plan sheet.

Caltrans now has a web site! To get to the web site, go to http://www.dot.ca.gov

Caltrans Metric

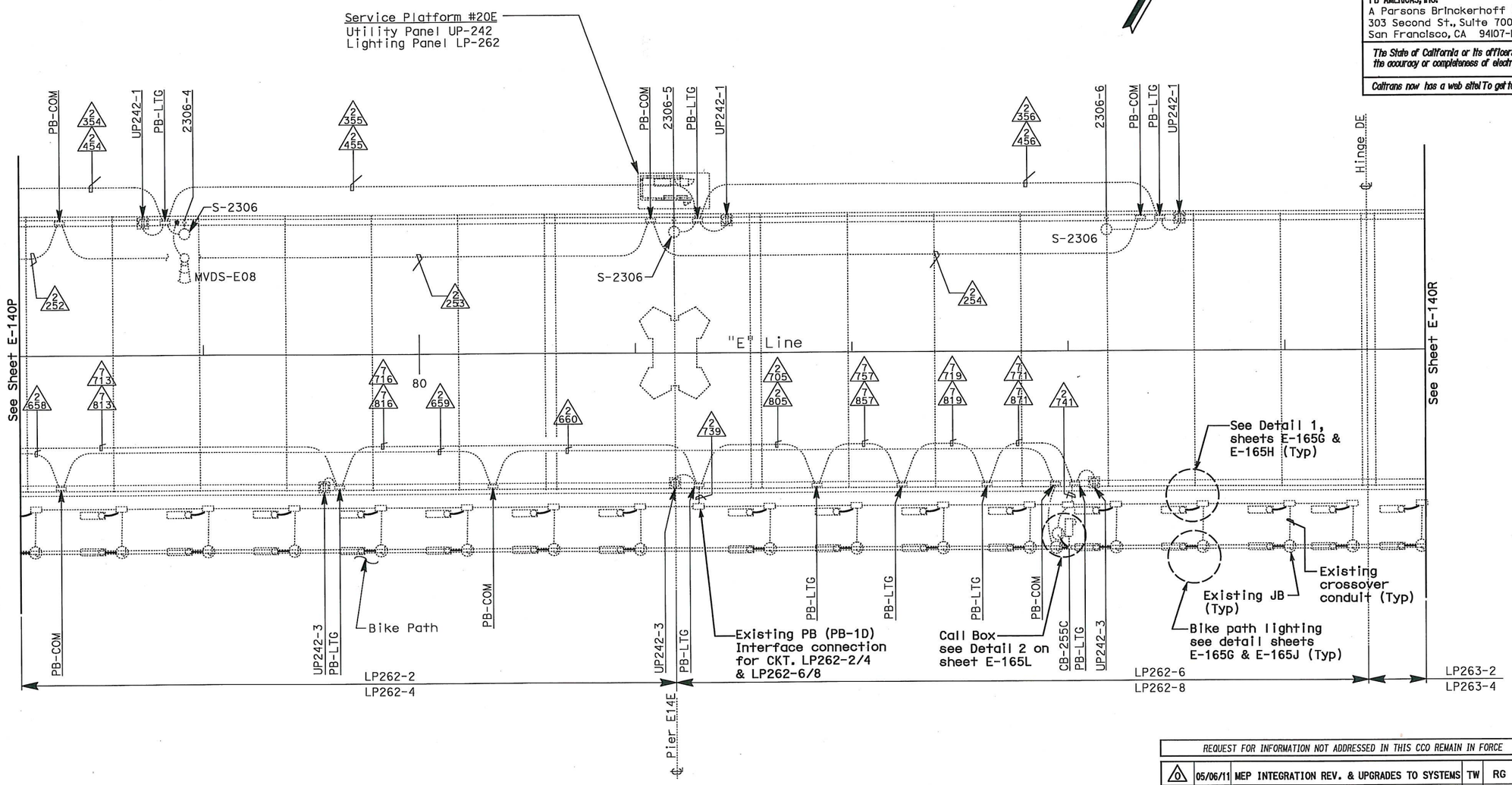

CONDUIT PLAN

NOTES:

1. This plan sheet is a record drawing from Skyway structure. Existing condition shown is diagrammatic and may not completely reflect the actual as-built condition. Contractor to verify as-built prior to commencing the required modification. See Sheet EE-55 from Skyway Structures, contract No. 04-012024.
2. Unless shown in bold, everything else shown was part of Skyway Contract.

REQUEST FOR INFORMATION NOT ADDRESSED IN THIS CCO REMAIN IN FORCE

MARK	DATE	DESCRIPTIONS	BY	CH'D	CCO#
0	05/06/11	MEP INTEGRATION REV. & UPGRADES TO SYSTEMS	TW	RG	163

REVISIONS

CONTRACT CHANGE ORDER NO. 163
SHEET 17 OF 32

SKYWAY ROADWAY LEVEL EASTBOUND LIGHTING AND ELECTRICAL SYSTEMS

SCALE: 1:200

E-140Q

THIS PLAN ACCURATE FOR ELECTRICAL WORK ONLY.

ALL DIMENSIONS ARE IN METERS UNLESS OTHERWISE SHOWN

FOR REDUCED PLANS ORIGINAL SCALE IS IN MILLIMETERS 0 20 40 60 80

DGN FILE =>04-0120f1_0193S15.dgn
USERNAME =>llorico

CU 04251 | EA 0120F1

STATE OF CALIFORNIA - DEPARTMENT OF TRANSPORTATION
Caltrans

DESIGN OVERSIGHT
BEHZAD GOLEMOHAMMADI

CALCULATED/DESIGNED BY XX
CHECKED BY XX

DATE XX/10	REVISED BY
XX/10	DATE REVISED

LAST REVISION 00-00-00
DATE PLOTTED => 10-MAY-2011
TIME PLOTTED => 16:43

DIST	COUNTY	ROUTE	KILOMETER POST TOTAL PROJECT	SHEET No	TOTAL SHEETS
04	SF,Ala	80	13.2 / 13.9	193S16	1204

Syn Yee Chin 10/28/10
REGISTERED ELECTRICAL ENGINEER DATE

PLANS APPROVAL DATE

REGISTERED PROFESSIONAL ENGINEER SYN YEE CHIN No. 18186 Exp. 09/30/2011 ELECTRICAL STATE OF CALIFORNIA

PB AMERICAS, Inc.
A Parsons Brinckerhoff Company
303 Second St., Suite 700N
San Francisco, CA 94107-1317

The State of California or its officers or agents shall not be responsible for the accuracy or completeness of electronic copies of this plan sheet.

Caltrans now has a web site! To get to the web site, go to http://www.dot.ca.gov

Caltrans Metric

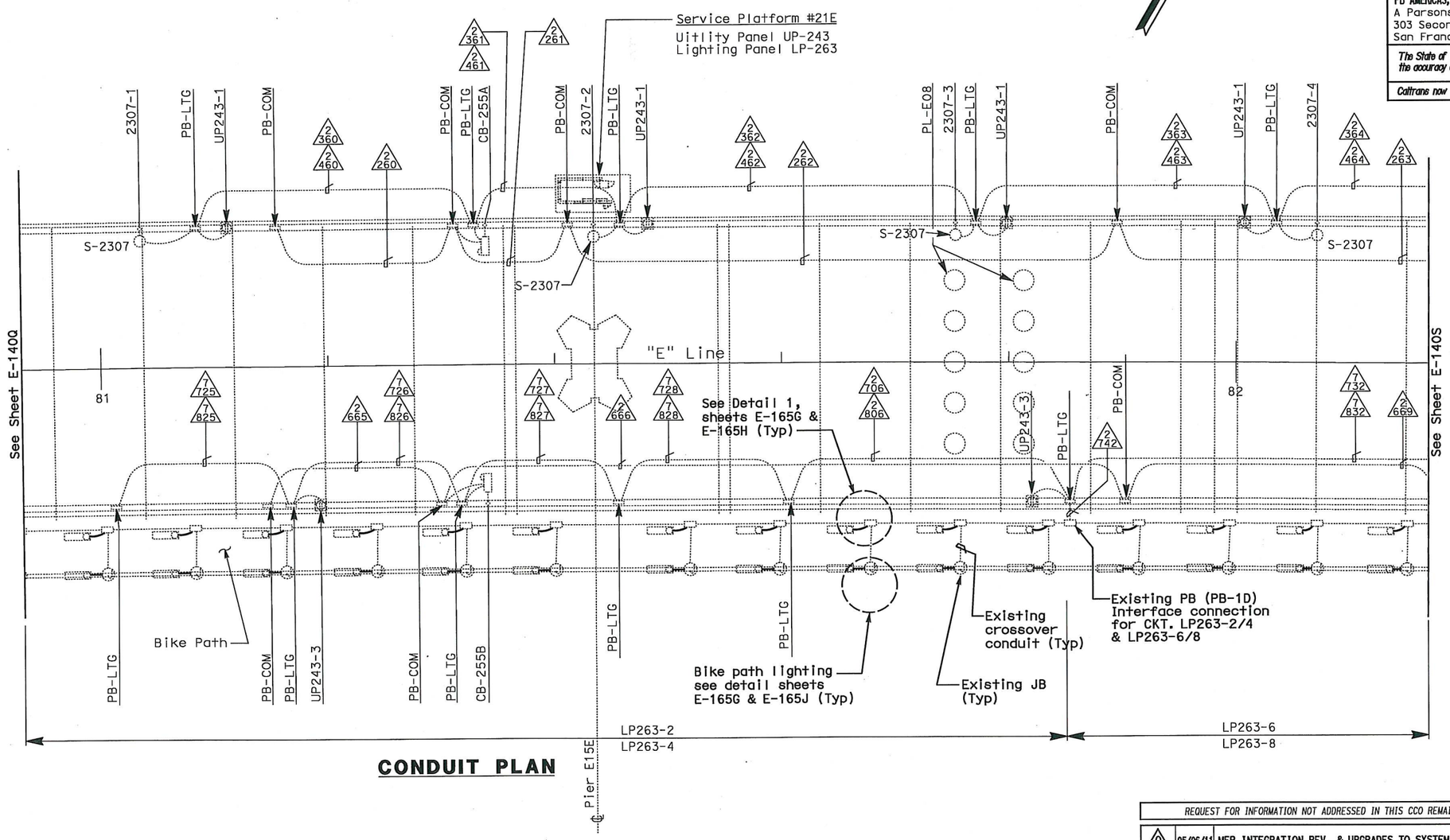

CONDUIT PLAN

NOTES:

1. This plan sheet is a record drawing from Skyway structure. Existing condition shown is diagrammatic and may not completely reflect the actual as-built condition. Contractor to verify as-built prior to commencing the required modification. See Sheet EE-56 from Skyway Structures, contract No. 04-012024.
2. Unless shown in bold, everything else shown was part of Skyway Contract.

REQUEST FOR INFORMATION NOT ADDRESSED IN THIS CCO REMAIN IN FORCE					
0	05/06/11	MEP INTEGRATION REV. & UPGRADES TO SYSTEMS	TW	RG	163
MARK	DATE	DESCRIPTIONS	BY	CH'D	CCO#
		REVISIONS			

CONTRACT CHANGE ORDER NO. 163
SHEET 18 OF 32

SKYWAY ROADWAY LEVEL EASTBOUND LIGHTING AND ELECTRICAL SYSTEMS

SCALE: 1:200

E-140R

STATE OF CALIFORNIA - DEPARTMENT OF TRANSPORTATION
Caltrans

DESIGN OVERSIGHT
BEHZAD GOLEMOHAMMADI

CALCULATED/DESIGNED BY XX
CHECKED BY XX

DATE XX/10 REVISED BY
XX/10 DATE REVISED

LAST REVISION 00-00-00
DATE PLOTTED => 10-MAY-2011
TIME PLOTTED => 16:43

THIS PLAN ACCURATE FOR ELECTRICAL WORK ONLY.

ALL DIMENSIONS ARE IN METERS UNLESS OTHERWISE SHOWN

FOR REDUCED PLANS ORIGINAL SCALE IS IN MILLIMETERS 0 20 40 60 80

DGN FILE =>04-0120f1_0193S16.dgn
USERNAME =>llorico

CU 04251

EA 0120F1

DIST	COUNTY	ROUTE	KILOMETER POST TOTAL PROJECT	SHEET No	TOTAL SHEETS
04	SF,Ala	80	13.2 / 13.9	193S17	1204

Syn Yee Chin 10/28/10
REGISTERED ELECTRICAL ENGINEER DATE

PLANS APPROVAL DATE

REGISTERED PROFESSIONAL ENGINEER
SYN YEE CHIN
No. 18186
Exp. 09/30/2011
ELECTRICAL
STATE OF CALIFORNIA

PB AMERICAS, Inc.
A Parsons Brinckerhoff Company
303 Second St., Suite 700N
San Francisco, CA 94107-1317

The State of California or its officers or agents shall not be responsible for the accuracy or completeness of electronic copies of this plan sheet.

Caltrans now has a web site! To get to the web site, go to http://www.dot.ca.gov

Caltrans Metric

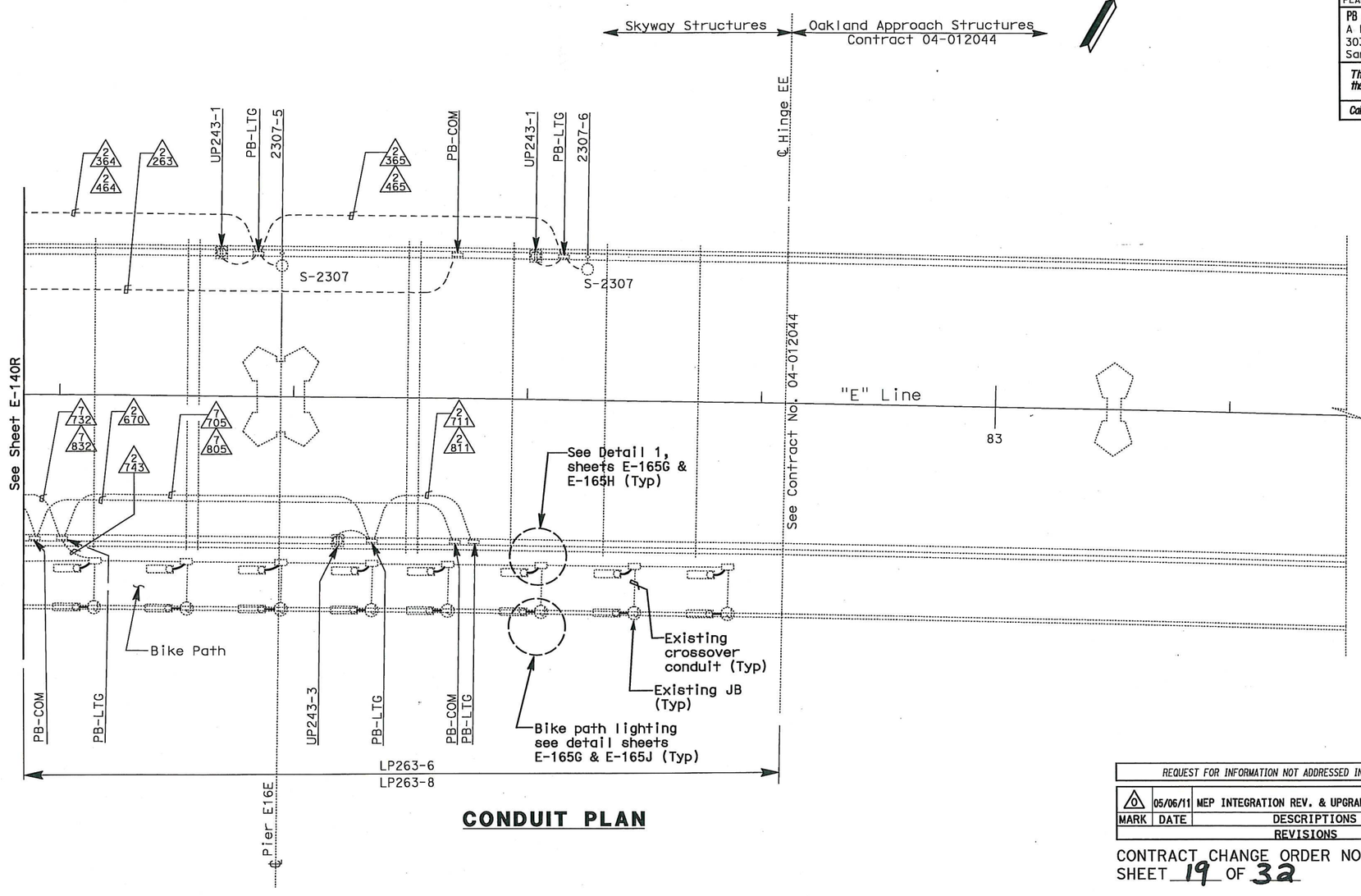

CONDUIT PLAN

REQUEST FOR INFORMATION NOT ADDRESSED IN THIS CCO REMAIN IN FORCE					
0	05/06/11	MEP INTEGRATION REV. & UPGRADES TO SYSTEMS	TW	RG	163
MARK	DATE	DESCRIPTIONS	BY	CH'D	CCO#
		REVISIONS			

CONTRACT CHANGE ORDER NO. 163
SHEET 19 OF 32

NOTES:

1. This plan sheet is a record drawing from Skyway structure. Existing condition shown is diagrammatic and may not completely reflect the actual as-built condition. Contractor to verify as-built prior to commencing the required modification. See Sheet EE-57 from Skyway Structures, contract No. 04-012024.
2. Unless shown in bold, everything else shown was part of Skyway Contract.

SKYWAY ROADWAY LEVEL EASTBOUND LIGHTING AND ELECTRICAL SYSTEMS

SCALE: 1:200

E-140S

STATE OF CALIFORNIA - DEPARTMENT OF TRANSPORTATION
Caltrans

DESIGN OVERSIGHT
BEHZAD GOLEMOHAMMADI

CALCULATED/DESIGNED BY XX
CHECKED BY XX
DATE XX/XX/10
REVISED BY
DATE REVISED

LAST REVISION 00-00-00
DATE PLOTTED => 10-MAY-2011
TIME PLOTTED => 16:43

THIS PLAN ACCURATE FOR ELECTRICAL WORK ONLY.

ALL DIMENSIONS ARE IN METERS UNLESS OTHERWISE SHOWN

FOR REDUCED PLANS ORIGINAL SCALE IS IN MILLIMETERS 0 20 40 60 80

DGN FILE =>04-0120f1_0193S17.dgn
USERNAME =>llorico

CU 04251

EA 0120F1

DIST	COUNTY	ROUTE	KILOMETER POST TOTAL PROJECT	SHEET No	TOTAL SHEETS
04	SF, Ala	80	13.2 / 13.9	198S01	1204

Syn Yee Chin 10/28/10
REGISTERED ELECTRICAL ENGINEER DATE

PLANS APPROVAL DATE

REGISTERED PROFESSIONAL ENGINEER SYN YEE CHIN No. 18186 Exp. 09/30/2011 ELECTRICAL STATE OF CALIFORNIA

PB AMERICAS, Inc.
A Parsons Brinckerhoff Company
303 Second St., Suite 700N
San Francisco, CA 94107-1317

The State of California or its officers or agents shall not be responsible for the accuracy or completeness of electronic copies of this plan sheet.

Caltrans now has a web site! To get to the web site, go to http://www.dot.ca.gov

Caltrans Metric

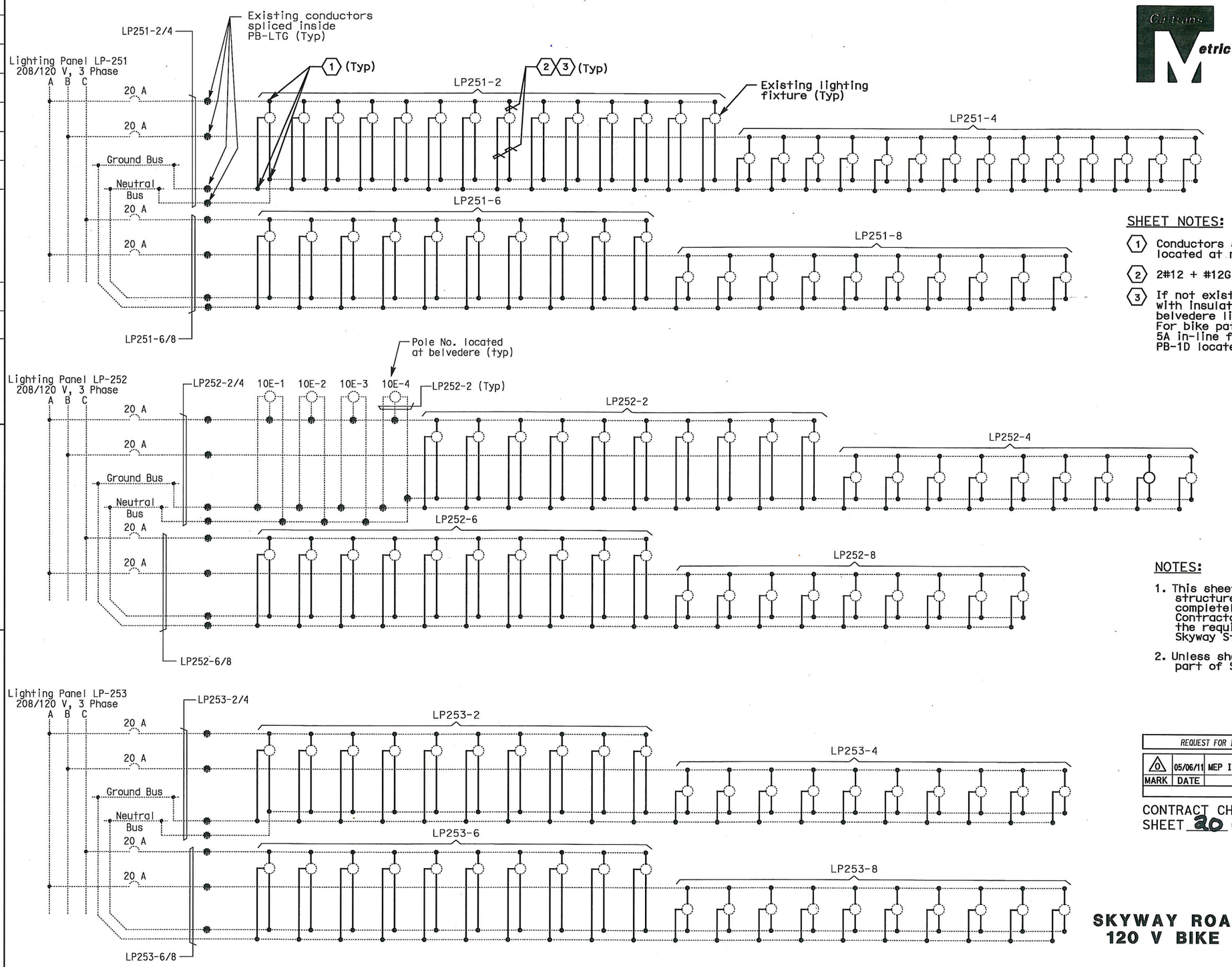

SHEET NOTES:

1. Conductors spliced inside PB-LTG (PB-1D) located at north side of Bike Path.
2. 2#12 + #12G, THWN. See Detail 1.
3. If not existing, install 5A in-line fuse in fuseholder with insulating boot per light fixture inside the belvedere light pole handhole for 10E-1 through 10E-4. For bike path lights (north/south hand railing) install 5A in-line fuses with water resistant fuseholder inside PB-1D located at north side of the bike path.

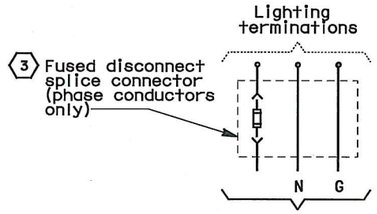

DETAIL-1
(TYP. FOR EACH BIKE PATH LIGHTING)

NOTES:

1. This sheet is a record drawing from Skyway structure. Existing condition shown may not completely reflect the actual as-built condition. Contractor to verify as-built prior to commencing the required modification. See Sheet EE-179 from Skyway Structures, contract No. 04-012024.
2. Unless shown in bold, everything else shown was part of Skyway Contract.

REQUEST FOR INFORMATION NOT ADDRESSED IN THIS CCO REMAIN IN FORCE

MARK	DATE	DESCRIPTIONS	BY	CH'D	CCO#
0	05/06/11	MEP INTEGRATION REV. & UPGRADES TO SYSTEMS	TW	RG	163

REVISIONS

CONTRACT CHANGE ORDER NO. 163
SHEET 20 OF 32

SKYWAY ROADWAY LEVEL EASTBOUND 120 V BIKE PATH WIRING DIAGRAMS

NO SCALE

E-147A

THIS PLAN ACCURATE FOR ELECTRICAL WORK ONLY.

STATE OF CALIFORNIA - DEPARTMENT OF TRANSPORTATION
Caltrans

DESIGN OVERSIGHT: BEHZAD GOLEMOHAMMADI

CALCULATED/DESIGNED BY | CHECKED BY | XX | DATE XX/10 | XX/10 | REVISED BY | DATE REVISED

LAST REVISION 00-00-00

DATE PLOTTED => 10-MAY-2011
TIME PLOTTED => 16:43

FOR REDUCED PLANS ORIGINAL SCALE IS IN MILLIMETERS 0 20 40 60 80

DGN FILE =>04-0120f1_0198S01.dgn
USERNAME =>llorico

CU 04251 | EA 0120F1

DIST	COUNTY	ROUTE	KILOMETER POST TOTAL PROJECT	SHEET No	TOTAL SHEETS
04	SF,Ala	80	13.2 / 13.9	198S02	1204

Syn Yee Chin 10/28/10
REGISTERED ELECTRICAL ENGINEER DATE

REGISTERED PROFESSIONAL ENGINEER SYN YEE CHIN No. 18186 Exp. 09/30/2011 ELECTRICAL STATE OF CALIFORNIA

PLANS APPROVAL DATE

PB AMERICAS, Inc.
A Parsons Brinckerhoff Company
303 Second St., Suite 700N
San Francisco, CA 94107-1317

The State of California or its officers or agents shall not be responsible for the accuracy or completeness of electronic copies of this plan sheet.

Caltrans now has a web site! To get to the web site, go to http://www.dot.ca.gov

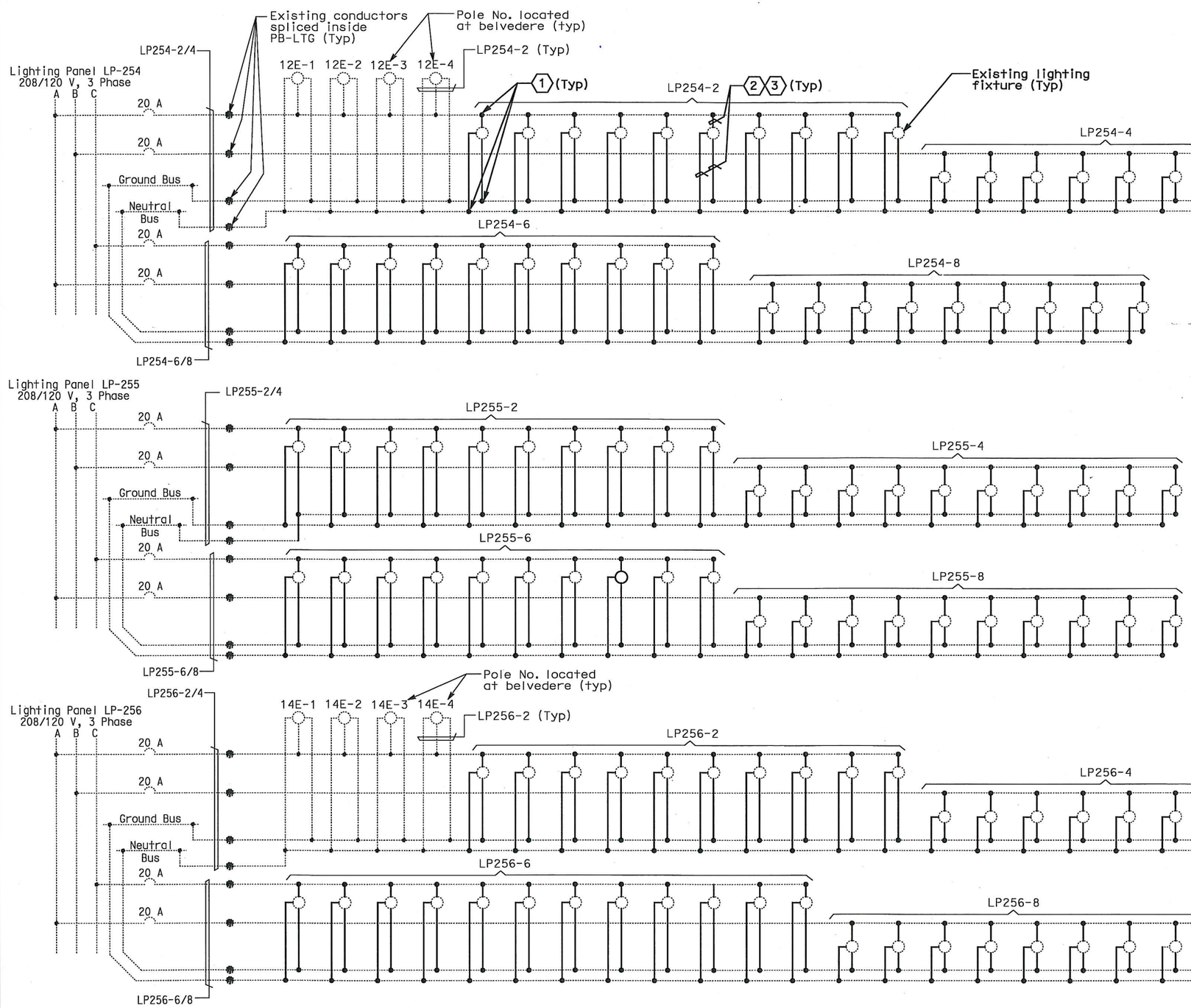

SHEET NOTES:

1. Conductors spliced inside PB-LTG (PB-1D) located at north side of Bike Path.
2. 2#12 + #12G, THWN. See Detail 1.
3. If not existing, install 5A in-line fuse in fuseholder with insulating boot per light fixture inside the belvedere light pole handhole for 14E-1 through 14E-4. For bike path lights (north/south hand railing) install 5A in-line fuses with water resistant fuseholder inside PB-1D located at north side of the bike path.

NOTES:

1. This sheet is a record drawing from Skyway structure. Existing condition shown may not completely reflect the actual as-built condition. Contractor to verify as-built prior to commencing the required modification. See Sheet EE-180 from Skyway Structures, contract No. 04-012024.
2. Unless shown in bold, everything else shown was part of Skyway Contract.

REQUEST FOR INFORMATION NOT ADDRESSED IN THIS CCO REMAIN IN FORCE

MARK	DATE	DESCRIPTIONS	BY	CH'D	CCO#
0	05/06/11	MEP INTEGRATION REV. & UPGRADES TO SYSTEMS	TW	RG	163

REVISIONS

CONTRACT CHANGE ORDER NO. 163
SHEET 21 OF 32

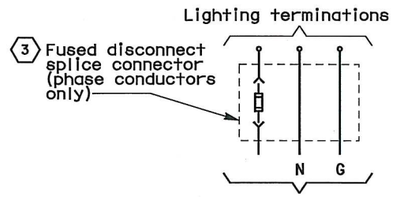

DETAIL-1
(TYP. FOR EACH BIKE PATH LIGHTING)

SKYWAY ROADWAY LEVEL EASTBOUND 120 V BIKE PATH WIRING DIAGRAMS

NO SCALE

E-147B

THIS PLAN ACCURATE FOR ELECTRICAL WORK ONLY.

DATE XX/XX	REVISED BY	DATE XX/XX	REVISED
XX		XX	

CALCULATED/DESIGNED BY XX CHECKED BY XX

DESIGN OVERSIGHT BEHZAD GOLEMOHAMMADI

STATE OF CALIFORNIA - DEPARTMENT OF TRANSPORTATION

LAST REVISION 00-00-00 DATE PLOTTED => 10-MAY-2011 TIME PLOTTED => 16:43

FOR REDUCED PLANS ORIGINAL SCALE IS IN MILLIMETERS 0 20 40 60 80

DGN FILE =>04-0120f1_0198S02.dgn
USERNAME =>llorico

CU 04251 EA 0120F1

DIST	COUNTY	ROUTE	KILOMETER POST TOTAL PROJECT	SHEET No	TOTAL SHEETS
04	SF,Ala	80	13.2 / 13.9	198S03	1204

Syn Yee Chin 10/28/10
REGISTERED ELECTRICAL ENGINEER DATE

PLANS APPROVAL DATE

REGISTERED PROFESSIONAL ENGINEER SYN YEE CHIN No. 18186 Exp. 09/30/2011 ELECTRICAL STATE OF CALIFORNIA

PB AMERICAS, Inc.
A Parsons Brinckerhoff Company
303 Second St., Suite 700N
San Francisco, CA 94107-1317

The State of California or its officers or agents shall not be responsible for the accuracy or completeness of electronic copies of this plan sheet.

Caltrans now has a web site! To get to the web site, go to http://www.dot.ca.gov

Caltrans Metric

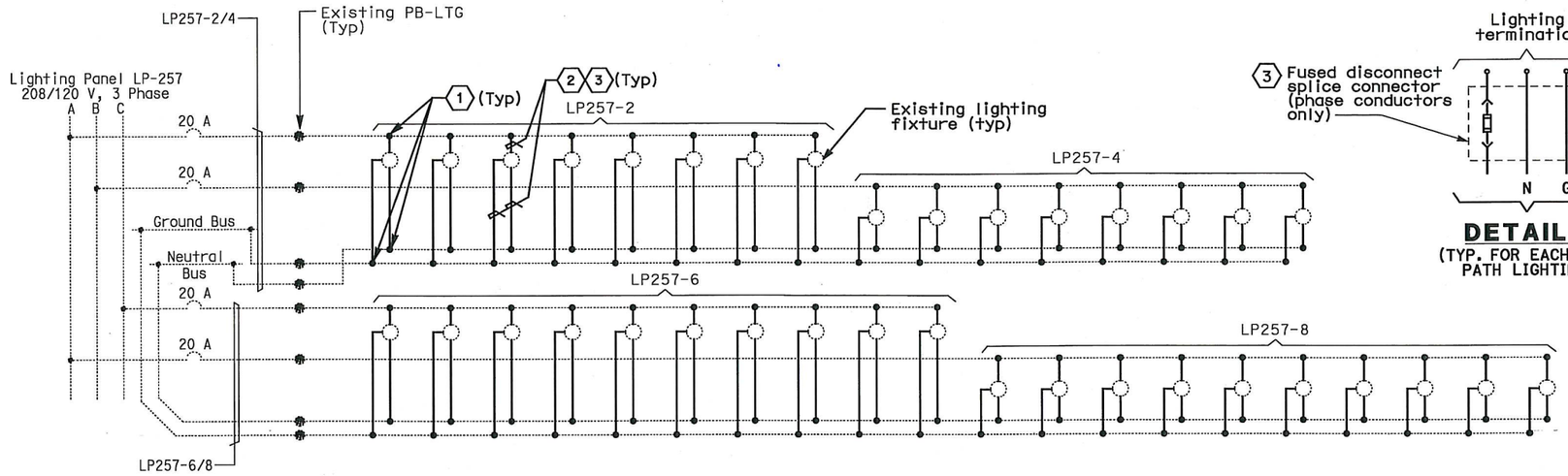

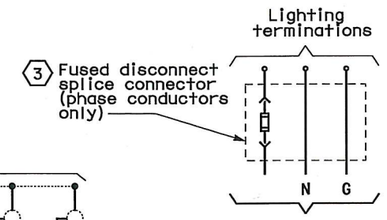

DETAIL-1
(TYP. FOR EACH BIKE PATH LIGHTING)

SHEET NOTES:

1. Conductors spliced inside PB-LTG (PB-1D) located at north side of Bike Path.
2. 2#12 + #12G, THWN. See Detail 1.
3. If not existing, install 5A in-line fuse in fuseholder with insulating boot per light fixture inside the belvedere light pole handhole for 16E-1 through 16E-4. For bike path lights (north/south hand railing) install 5A in-line fuses with water resistant fuseholder inside PB-1D located at north side of the bike path.

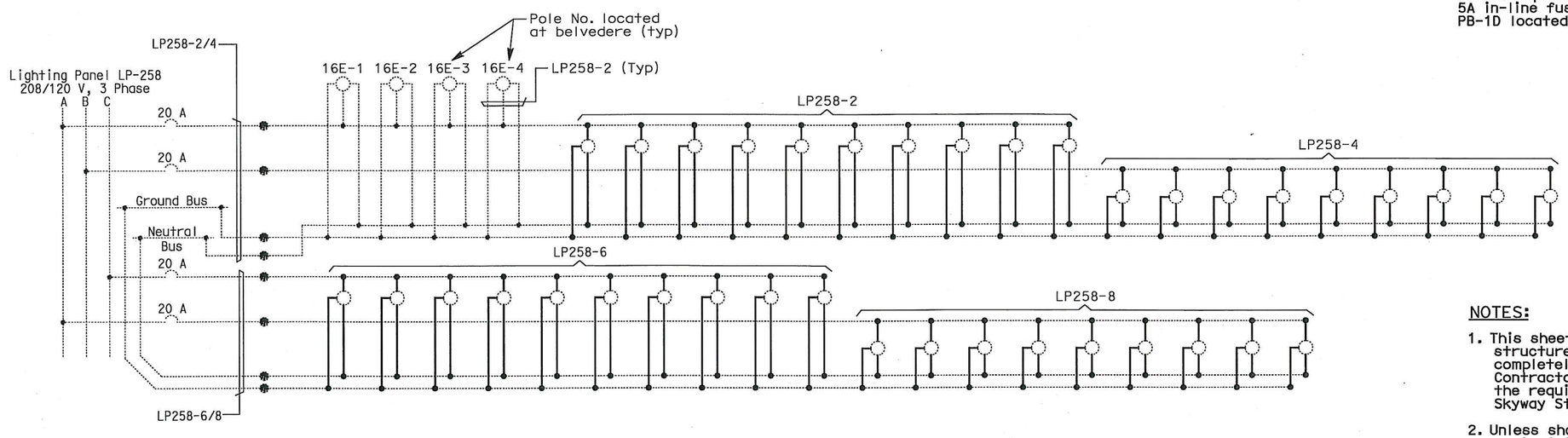

NOTES:

1. This sheet is a record drawing from Skyway structure. Existing condition shown may not completely reflect the actual as-built condition. Contractor to verify as-built prior to commencing the required modification. See Sheet EE-181 from Skyway Structures, contract No. 04-012024.
2. Unless shown in bold, everything else shown was part of Skyway Contract.

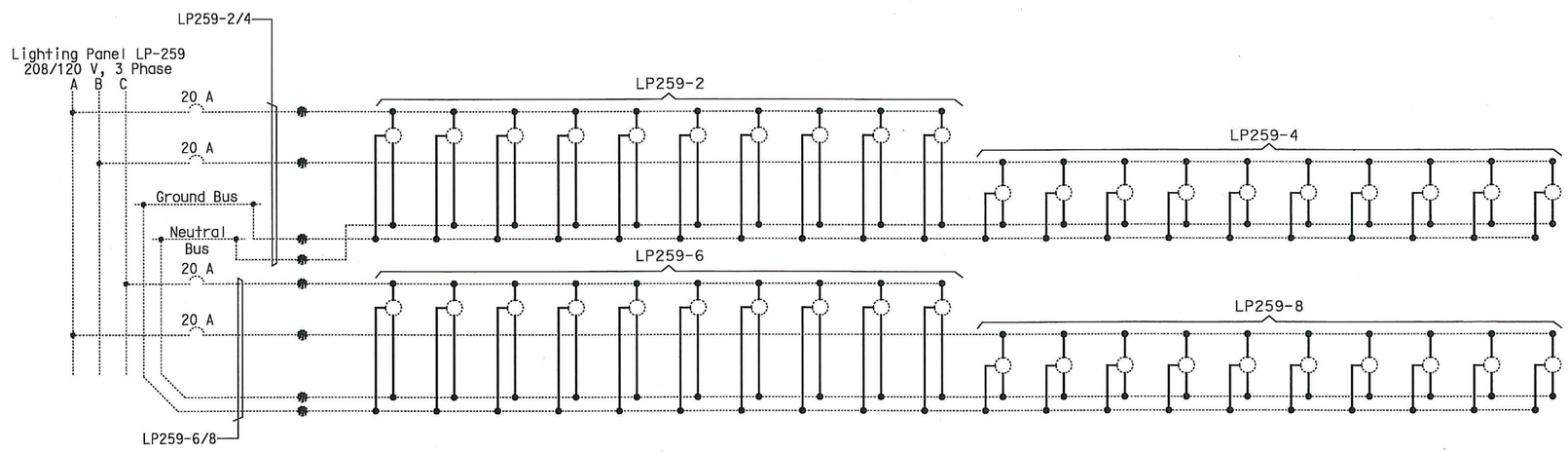

REQUEST FOR INFORMATION NOT ADDRESSED IN THIS CCO REMAIN IN FORCE					
0	05/06/11	MEP INTEGRATION REV. & UPGRADES TO SYSTEMS	TW	RG	163
MARK	DATE	DESCRIPTIONS	BY	CH'D	CCO#
REVISIONS					

CONTRACT CHANGE ORDER NO. 163
SHEET 22 OF 32

SKYWAY ROADWAY LEVEL EASTBOUND 120 V BIKE PATH WIRING DIAGRAMS

NO SCALE

E-147C

THIS PLAN ACCURATE FOR ELECTRICAL WORK ONLY.

STATE OF CALIFORNIA - DEPARTMENT OF TRANSPORTATION
Caltrans

DESIGN OVERSIGHT: BEHZAD GOLEMOHAMMADI

CALCULATED/DESIGNED BY: XX | DATE XX/10 | REVISED BY
CHECKED BY: XX | XX/10 | DATE REVISED

LAST REVISION 00-00-00
DATE PLOTTED => 10-MAY-2011
TIME PLOTTED => 16:43

FOR REDUCED PLANS ORIGINAL SCALE IS IN MILLIMETERS 0 20 40 60 80

DGN FILE =>04-0120f1_0198S03.dgn
USERNAME =>llorico

CU 04251 | EA 0120F1

DIST	COUNTY	ROUTE	KILOMETER POST TOTAL PROJECT	SHEET No	TOTAL SHEETS
04	SF,Ala	80	13.2 / 13.9	198S04	1204

Syn Yee Chin 10/28/10
REGISTERED ELECTRICAL ENGINEER DATE

PLANS APPROVAL DATE

REGISTERED PROFESSIONAL ENGINEER SYN YEE CHIN No. 18186 Exp. 09/30/2011 ELECTRICAL STATE OF CALIFORNIA

PB AMERICAS, Inc.
A Parsons Brinckerhoff Company
303 Second St., Suite 700N
San Francisco, CA 94107-1317

The State of California or its officers or agents shall not be responsible for the accuracy or completeness of electronic copies of this plan sheet.

Caltrans now has a web site! To get to the web site, go to http://www.dot.ca.gov

Caltrans Metric

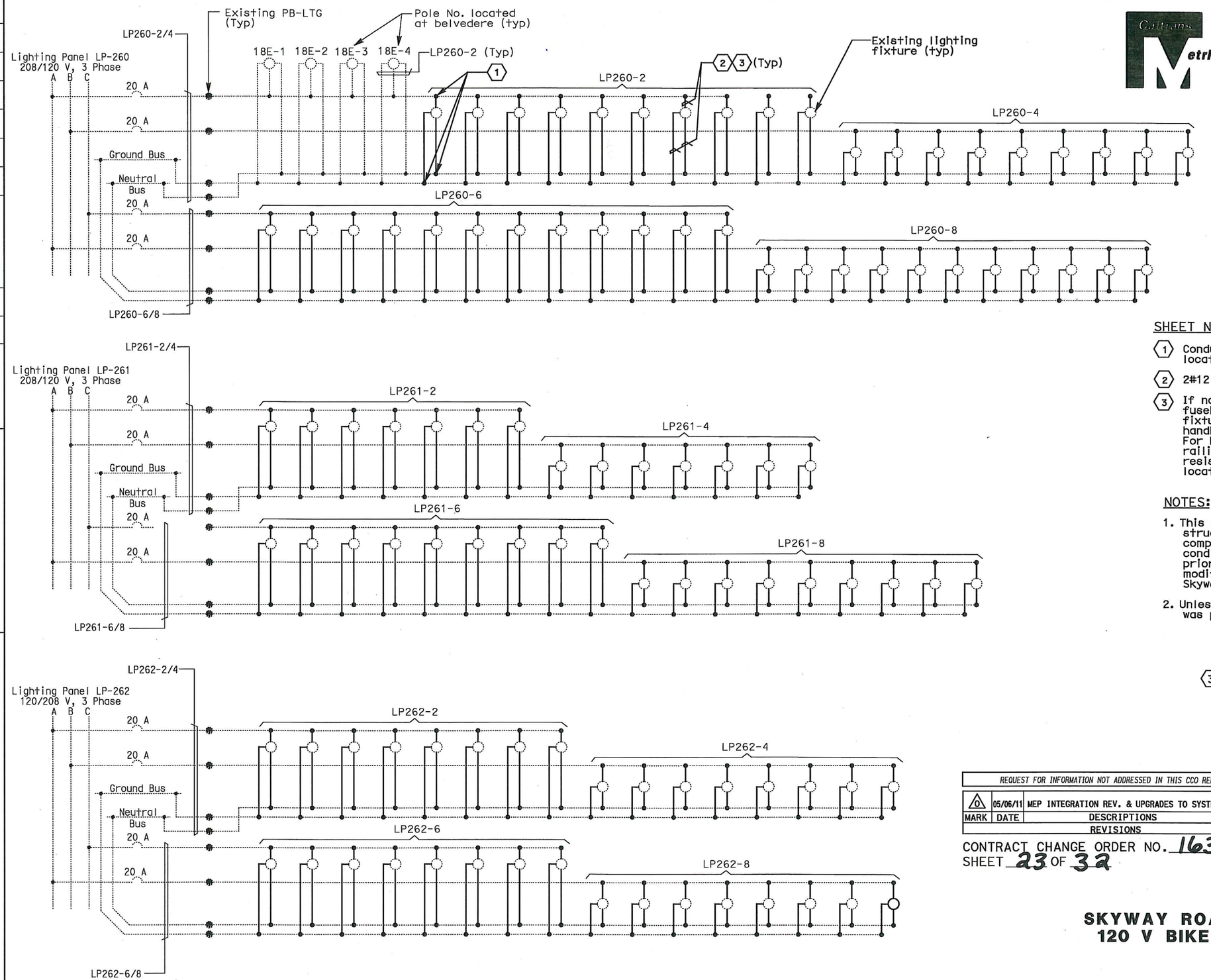

THIS PLAN ACCURATE FOR ELECTRICAL WORK ONLY.

SHEET NOTES:

1. Conductors spliced inside PB-LTG (PB-1D) located at north side of Bike Path.
2. 2#12 + #12G, THWN. See Detail 1.
3. If not existing, install 5A in-line fuse in fuseholder with insulating boot per light fixture inside the belvedere light pole handhole for 18E-1 through 18E-4. For bike path lights (north/south hand railing) install 5A in-line fuses with water resistant fuseholder inside PB-1D located at north side of the bike path.

NOTES:

1. This sheet is a record drawing from Skyway structure. Existing condition shown may not completely reflect the actual as-built condition. Contractor to verify as-built prior to commencing the required modification. See Sheet EE-182 from Skyway Structures, contract No. 04-012024.
2. Unless shown in bold, everything else shown was part of Skyway Contract.

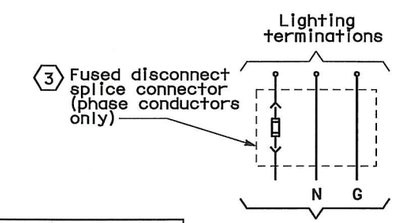

DETAIL-1
(TYP. FOR EACH BIKE PATH LIGHTING)

REQUEST FOR INFORMATION NOT ADDRESSED IN THIS CCO REMAIN IN FORCE

MARK	DATE	DESCRIPTIONS	BY	CH'D	CCO#
0	05/06/11	MEP INTEGRATION REV. & UPGRADES TO SYSTEMS	TW	RG	163

REVISIONS

CONTRACT CHANGE ORDER NO. 163
SHEET 23 OF 32

SKYWAY ROADWAY LEVEL EASTBOUND 120 V BIKE PATH WIRING DIAGRAMS

NO SCALE

E-147D

DATE XX/10	REVISED BY	DATE XX/10	REVISED BY
XX		XX	

CALCULATED/DESIGNED BY XX — CHECKED BY XX

DESIGN OVERSIGHT — BEHZAD GOLEMOHAMMADI

STATE OF CALIFORNIA - DEPARTMENT OF TRANSPORTATION — Caltrans

LAST REVISION 00-00-00 — DATE PLOTTED => 10-MAY-2011 TIME PLOTTED => 16:43

FOR REDUCED PLANS ORIGINAL SCALE IS IN MILLIMETERS 0 20 40 60 80

DGN FILE =>04-0120f1_0198S04.dgn
USERNAME =>llorico

CU 04251 | EA 0120F1

DIST	COUNTY	ROUTE	KILOMETER POST TOTAL PROJECT	SHEET No	TOTAL SHEETS
04	SF,Ala	80	13.2 / 13.9	198S05	1204

Caltrans Metric

Syn Yee Chin 10/28/10
REGISTERED ELECTRICAL ENGINEER DATE

PLANS APPROVAL DATE

REGISTERED PROFESSIONAL ENGINEER SYN YEE CHIN No. 18186 Exp. 09/30/2011 ELECTRICAL STATE OF CALIFORNIA

PB AMERICAS, Inc.
A Parsons Brinckerhoff Company
303 Second St., Suite 700N
San Francisco, CA 94107-1317

The State of California or its officers or agents shall not be responsible for the accuracy or completeness of electronic copies of this plan sheet.

Caltrans now has a web site! To get to the web site, go to http://www.dot.ca.gov

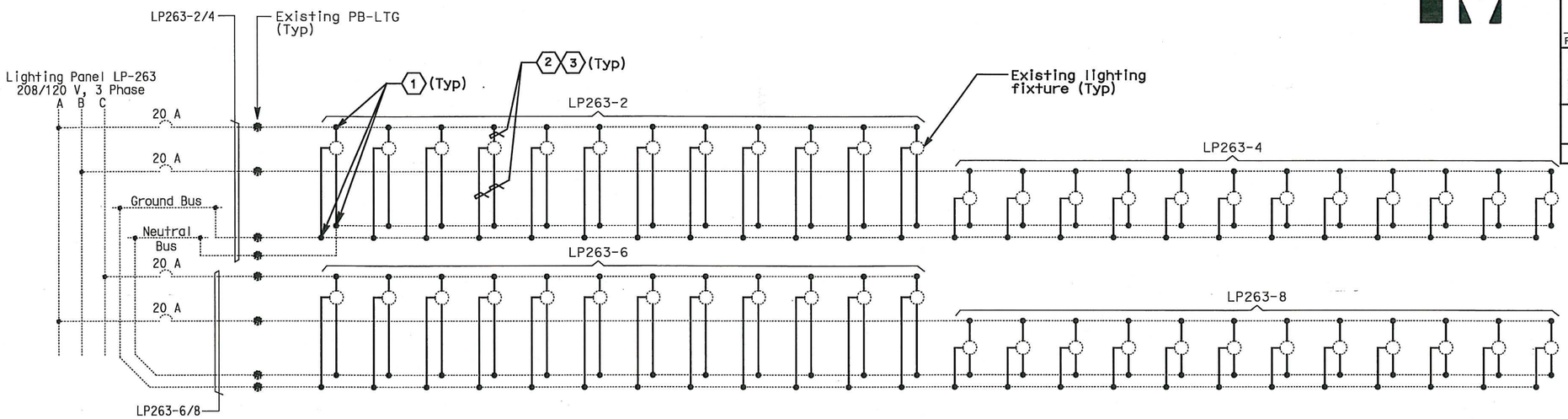

SHEET NOTES:

1. Conductors spliced inside PB-LTG (PB-1D) located at north side of Bike Path.
2. 2#12 + #12G, THWN. See Detail 1.
3. For bike path lights (north/south hand railing) install 5A in-line fuses with water resistant fuseholder inside PB-1D located at north side of the bike path.

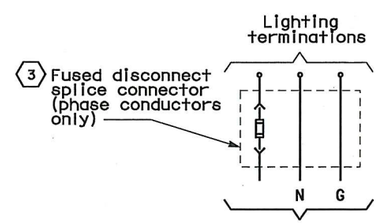

DETAIL-1
(TYP. FOR EACH BIKE PATH LIGHTING)

NOTES:

1. This sheet is a record drawing from Skyway structure. Existing condition shown may not completely reflect the actual as-built condition. Contractor to verify as-built prior to commencing the required modification. See Sheet EE-183 from Skyway Structures, contract No. 04-012024.
2. Unless shown in bold, everything else shown was part of Skyway Contract.

REQUEST FOR INFORMATION NOT ADDRESSED IN THIS CCO REMAIN IN FORCE

MARK	DATE	DESCRIPTIONS	BY	CH'D	CCO#
0	05/06/11	MEP INTEGRATION REV. & UPGRADES TO SYSTEMS	TW	RG	163

REVISIONS

CONTRACT CHANGE ORDER NO. 163
SHEET 24 OF 32

SKYWAY ROADWAY LEVEL EASTBOUND 120 V BIKE PATH WIRING DIAGRAMS

NO SCALE

E-147E

REVISED BY	DATE REVISED
DATE XX/10	XX/10
XX	XX
CALCULATED/DESIGNED BY	CHECKED BY

DESIGN OVERSIGHT
BEHZAD GOLEMOHAMMADI

STATE OF CALIFORNIA - DEPARTMENT OF TRANSPORTATION
Caltrans

THIS PLAN ACCURATE FOR ELECTRICAL WORK ONLY.

FOR REDUCED PLANS ORIGINAL SCALE IS IN MILLIMETERS 0 20 40 60 80

DGN FILE =>04-0120f1_0198S05.dgn
USERNAME =>llorico

CU 04251 | EA 0120F1

LAST REVISION 00-00-00
DATE PLOTTED => 10-MAY-2011
TIME PLOTTED => 16:43

DIST	COUNTY	ROUTE	KILOMETER POST TOTAL PROJECT	SHEET No	TOTAL SHEETS
04	SF	80	13.2/13.9	210 S7	1204

Syn Yee Chin 10/28/10
REGISTERED ELECTRICAL ENGINEER DATE

PLANS APPROVAL DATE

REGISTERED PROFESSIONAL ENGINEER SYN YEE CHIN No. 18186 Exp. 09/30/2011 ELECTRICAL STATE OF CALIFORNIA

PB AMERICAS, Inc.
A Parsons Brinckerhoff Company
303 Second St., Suite 700N
San Francisco, CA 94107-1317

The State of California or its officers or agents shall not be responsible for the accuracy or completeness of electronic copies of this plan sheet.

Caltrans now has a web site! To get to the web site, go to http://www.dot.ca.gov

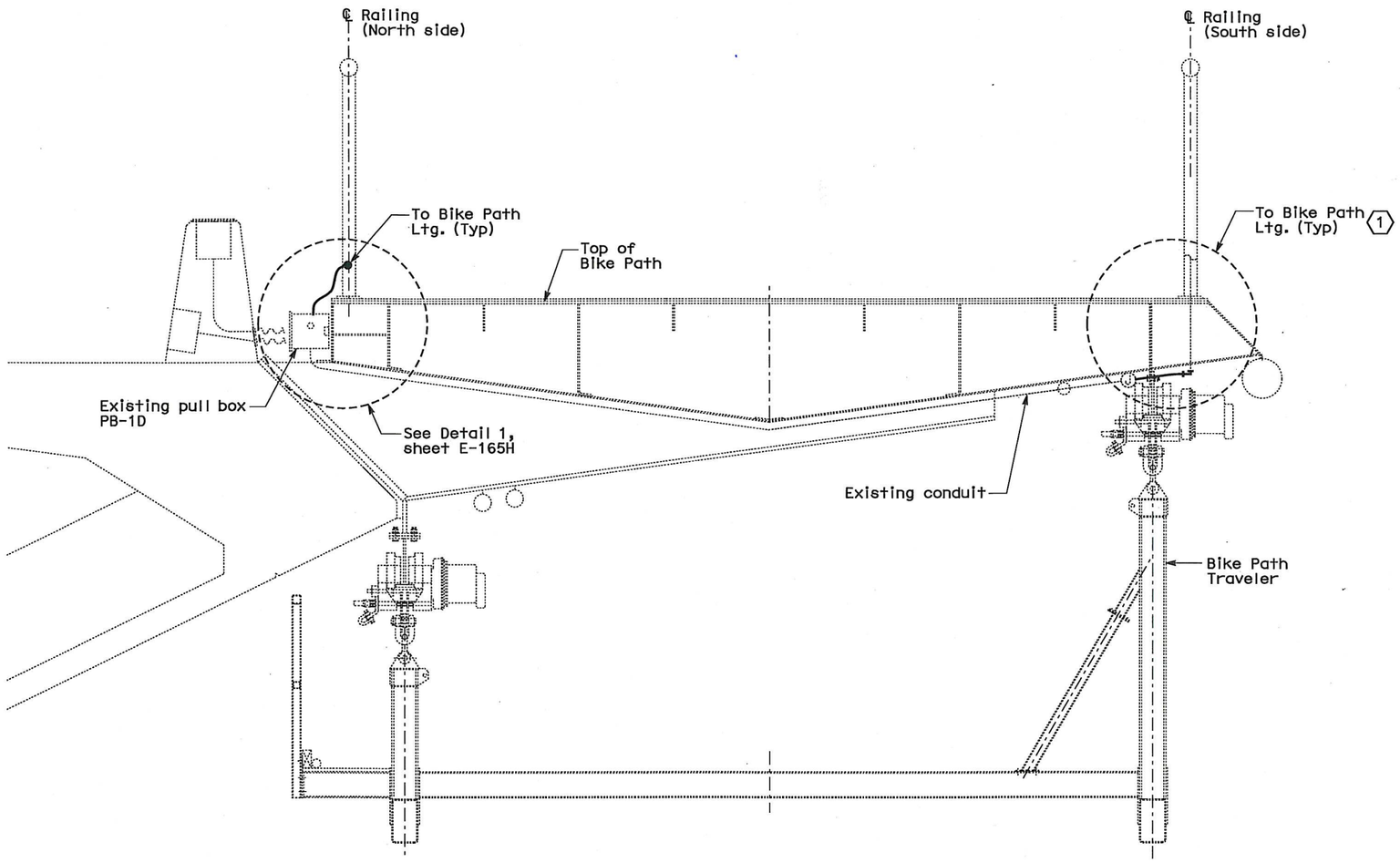

DETAIL 1 - ELEVATION

NO SCALE

SHEET NOTES:

1 For bike path light detail, see Sheet E-165J.

NOTES:

1. For location of bike path light fixtures and belvedere lights, see E-140A through E-140S.
2. All conduit connections shall be watertight.
3. Existing condition shown is diagrammatic and may not completely reflect the actual as-built condition. Contractor to verify as-built prior to commencing the required modification.

REQUEST FOR INFORMATION NOT ADDRESSED IN THIS CCO REMAIN IN FORCE

MARK	DATE	DESCRIPTIONS	BY	CH'D	CCO#
0	05/06/11	MEP INTEGRATION REV. & UPGRADES TO SYSTEMS	TW	RG	163

REVISIONS

CONTRACT CHANGE ORDER NO. 163
SHEET 25 OF 32

DETAILS
SKYWAY ROADWAY EASTBOUND
TYPICAL BIKE PATH PLANS AND SECTIONS

SCALE: 1:15

E-165G

DATE	REVISED BY	DATE	REVISED
XX/10	XX	XX/10	XX

CALCULATED/DESIGNED BY XX
CHECKED BY XX

DESIGN OVERSIGHT
BEHZAD GOLEMOHAMMADI

STATE OF CALIFORNIA - DEPARTMENT OF TRANSPORTATION

THIS PLAN ACCURATE FOR ELECTRICAL WORK ONLY.

ALL DIMENSIONS ARE IN MILLIMETERS UNLESS OTHERWISE SHOWN

FOR REDUCED PLANS ORIGINAL SCALE IS IN MILLIMETERS 0 20 40 60 80

DGN FILE =>04-0120f1_0210S07.dgn
USERNAME =>llorico

CU 04251 | EA 0120F1

LAST REVISION 00-00-00
DATE PLOTTED => 10-MAY-2011
TIME PLOTTED => 16:43

DIST	COUNTY	ROUTE	KILOMETER POST TOTAL PROJECT	SHEET No	TOTAL SHEETS
04	SF	80	13.2/13.9	210 S8	1204

Syn Yee Chin 10/28/10
REGISTERED ELECTRICAL ENGINEER DATE

PLANS APPROVAL DATE

REGISTERED PROFESSIONAL ENGINEER SYN YEE CHIN No. 18186 Exp. 09/30/2011 ELECTRICAL STATE OF CALIFORNIA

PB AMERICAS, Inc.
A Parsons Brinckerhoff Company
303 Second St., Suite 700N
San Francisco, CA 94107-1317

The State of California or its officers or agents shall not be responsible for the accuracy or completeness of electronic copies of this plan sheet.

Caltrans now has a web site! To get to the web site, go to http://www.dot.ca.gov

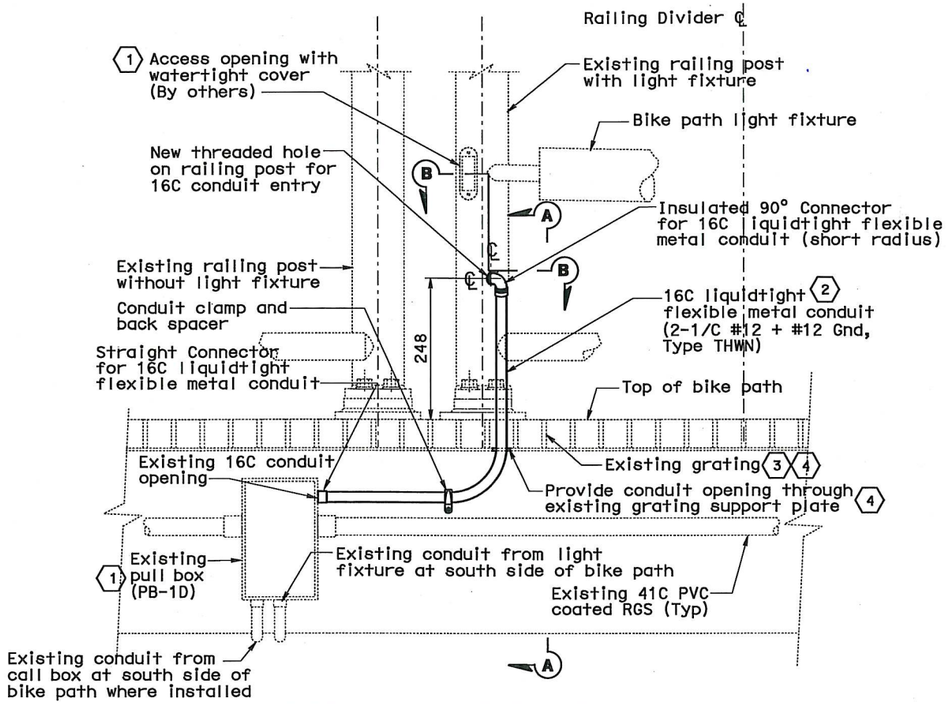

DETAIL 1 - ELEVATION

TYPICAL LIGHT FIXTURE CONDUIT INSTALLATION
AT NORTH SIDE OF THE BIKE PATH

SHEET NOTES:

1. Disconnect and remove existing bike path lighting conduits, JB and wires at both ends. Plug unused holes on pull box PB-1D.
2. Install a new 16C Liquidtight flexible metal conduit between the railing post and existing pull box (PB-1D). Install and connect new conductors to light fixture and splice to existing conductors inside PB-1D.
3. Where required, provide cutout opening on grating for the new conduit. Grating must be able to be removed without disconnecting the conduit or electrical wires from the light fixture.
4. Contractor shall restore all surface areas of steel plates and gratings that have been cut or where finish coating has been removed or damaged. Restoration shall be performed in accordance with the applicable specification.

NOTES:

1. For location of bike path light fixtures and belvedere lights, see E-140A through E-140S.
2. All conduit connections shall be watertight.
3. Existing condition shown is diagrammatic and may not completely reflect the actual as-built condition. Contractor to verify as-built prior to commencing the required modification.

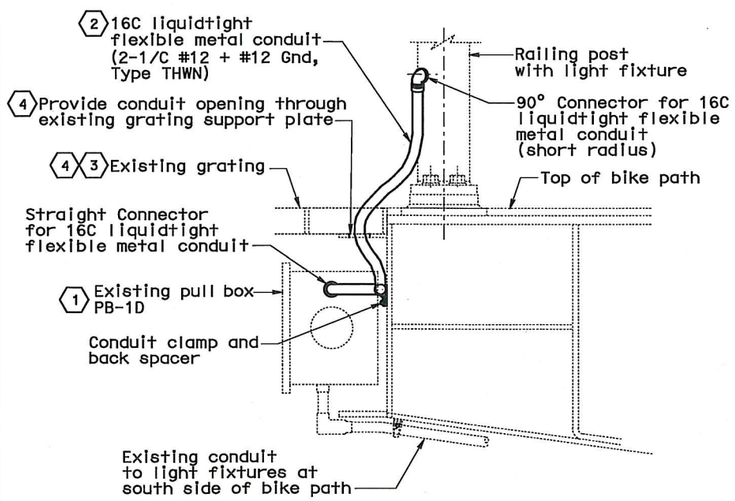

SECTION A-A

NO SCALE

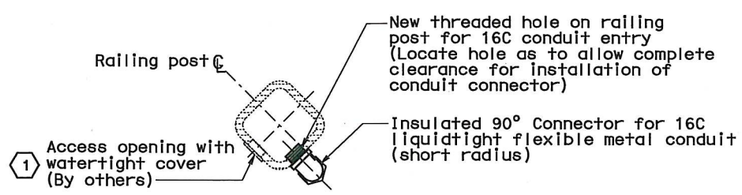

SECTION B-B

SCALE: 1:10

REQUEST FOR INFORMATION NOT ADDRESSED IN THIS CCO REMAIN IN FORCE					
0	05/06/11	MEP INTEGRATION REV. & UPGRADES TO SYSTEMS	TW	RG	163
MARK	DATE	DESCRIPTIONS	BY	CH'D	CCO#
		REVISIONS			

CONTRACT CHANGE ORDER NO. 163
SHEET 26 OF 32

DETAILS
SKYWAY ROADWAY EASTBOUND
TYPICAL BIKE PATH PLANS AND SECTIONS

SCALE: 1:5

E-165H

THIS PLAN ACCURATE FOR ELECTRICAL WORK ONLY.

ALL DIMENSIONS ARE IN MILLIMETERS UNLESS OTHERWISE SHOWN

FOR REDUCED PLANS ORIGINAL SCALE IS IN MILLIMETERS 0 20 40 60 80

DGN FILE =>04-0120f1_0210S08.dgn
USERNAME =>llorico

CU 04251 | EA 0120F1

STATE OF CALIFORNIA - DEPARTMENT OF TRANSPORTATION

DESIGN OVERSIGHT: BEHZAD GOLEMOHAMMADI

CALCULATED/ DESIGNED BY	DATE XX/10	REVISED BY
CHECKED BY	XX/10	DATE REVISED

LAST REVISION 00-00-00

DATE PLOTTED => 16-MAY-2011
TIME PLOTTED => 15:38

DIST	COUNTY	ROUTE	KILOMETER POST TOTAL PROJECT	SHEET No	TOTAL SHEETS
04	SF	80	13.2/13.9	210 S9	1204

Syn Yee Chin 10/28/10
REGISTERED ELECTRICAL ENGINEER DATE

PLANS APPROVAL DATE

REGISTERED PROFESSIONAL ENGINEER SYN YEE CHIN No. 18186 Exp. 09/30/2011 ELECTRICAL STATE OF CALIFORNIA

PB AMERICAS, Inc.
A Parsons Brinckerhoff Company
303 Second St., Suite 700N
San Francisco, CA 94107-1317

The State of California or its officers or agents shall not be responsible for the accuracy or completeness of electronic copies of this plan sheet.

Caltrans now has a web site! To get to the web site, go to http://www.dot.ca.gov

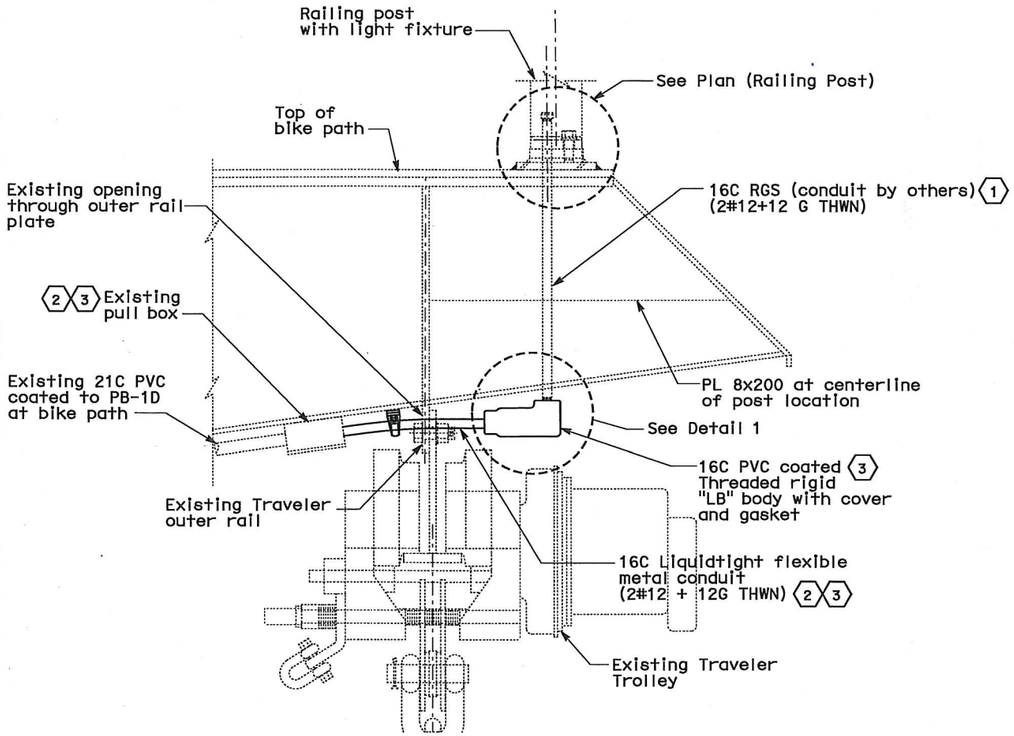

ELEVATION

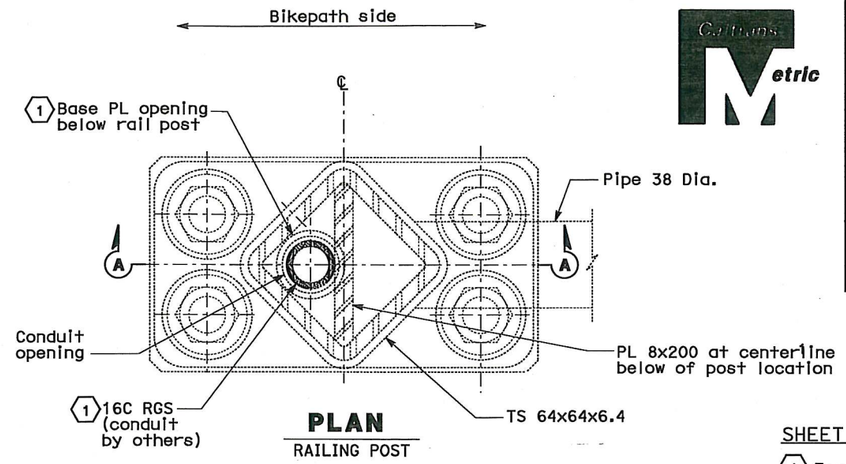

PLAN
RAILING POST

SHEET NOTES:

(1) For conduit installation and opening, see Structural Plans.

(2) Disconnect and remove existing RG conduits and cables intended for bike path lighting from existing pull box.

(3) Install new 16C Liquidtight flexible metal conduit route through existing Traveler outer rail plate between existing pull box and new 16C PVC coated threaded rigid "LB" body. Connect "LB" body to existing 16C RGS (conduit by others). Install new conductors and splice (2#12 + 12G THWN) from existing pull box to bike path railing post via existing conduit.

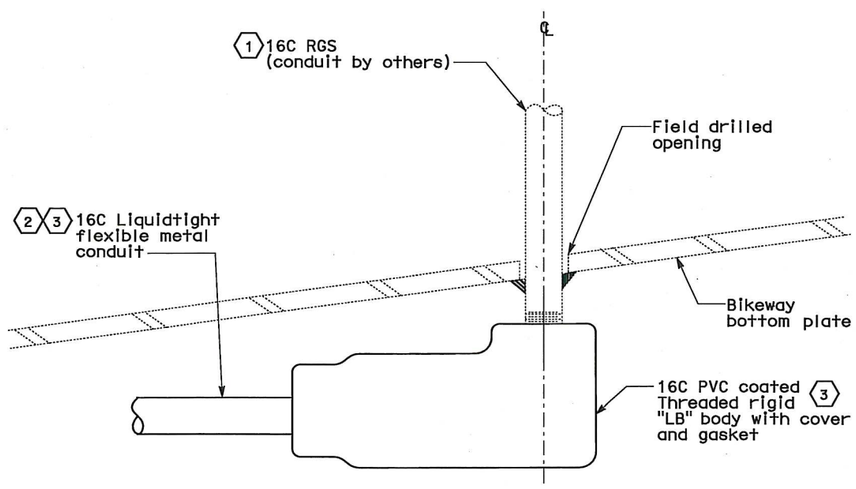

DETAIL 1
CONDUIT PENETRATION DETAIL

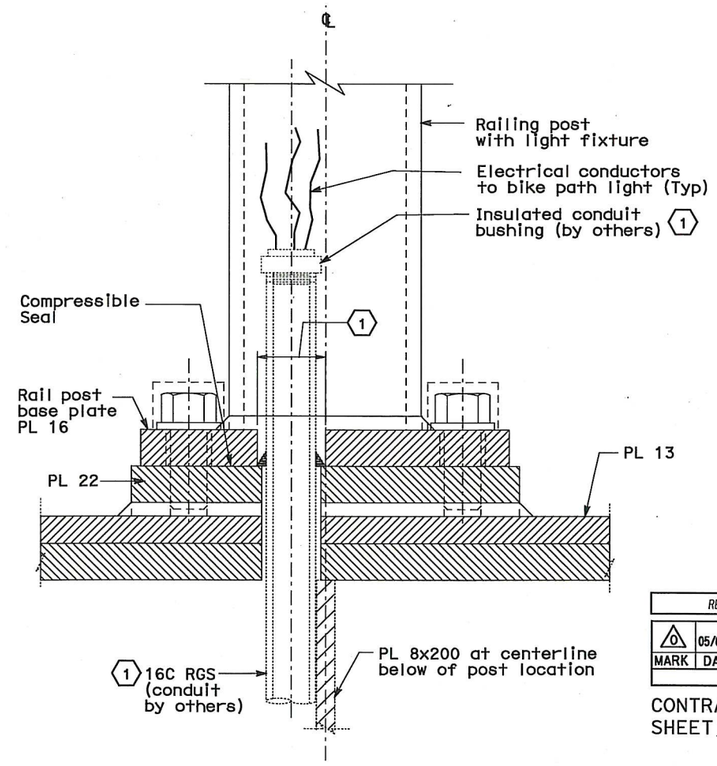

SECTION A-A

NOTES:

1. For locations of bike path light fixtures, see plan sheets E-140A through E-140S.
2. All conduit connections shall be watertight.
3. Existing condition shown is diagrammatic and may not completely reflect the actual as-built condition. Contractor to verify as-built prior to commencing the required modification.

REQUEST FOR INFORMATION NOT ADDRESSED IN THIS CCO REMAIN IN FORCE

MARK	DATE	DESCRIPTIONS	BY	CH'D	CCO#
0	05/06/11	MEP INTEGRATION REV. & UPGRADES TO SYSTEMS	TW	RG	163

REVISIONS

CONTRACT CHANGE ORDER NO. 163
SHEET 27 OF 32

DETAILS
SKYWAY ROADWAY EASTBOUND
TYPICAL BIKE PATH PLANS AND SECTIONS
SCALE: 1:5

E-165J

DESIGN OVERSIGHT: BEHZAD GOLEMOHAMMADI
CALCULATED/DESIGNED BY
CHECKED BY
DATE REVISED BY
DATE REVISED

STATE OF CALIFORNIA - DEPARTMENT OF TRANSPORTATION
Caltrans

LAST REVISION 00-00-00
DATE PLOTTED => 13-MAY-2011
TIME PLOTTED => 10:55

THIS PLAN ACCURATE FOR ELECTRICAL WORK ONLY.

ALL DIMENSIONS ARE IN MILLIMETERS UNLESS OTHERWISE SHOWN

FOR REDUCED PLANS ORIGINAL SCALE IS IN MILLIMETERS 0 20 40 60 80

DGN FILE =>04-0120f1_0210S09.dgn
USERNAME =>llorico

CU 04251

EA 0120F1

DIST	COUNTY	ROUTE	KILOMETER POST TOTAL PROJECT	SHEET No	TOTAL SHEETS
04	SF	80	13.2/13.9	210 S10	1204

Syn Yee Chin 10/28/10
REGISTERED ELECTRICAL ENGINEER DATE

PLANS APPROVAL DATE

REGISTERED PROFESSIONAL ENGINEER SYN YEE CHIN No. 18186 Exp. 09/30/2011 ELECTRICAL STATE OF CALIFORNIA

PB AMERICAS, Inc.
A Parsons Brinckerhoff Company
303 Second St., Suite 700N
San Francisco, CA 94107-1317

The State of California or its officers or agents shall not be responsible for the accuracy or completeness of electronic copies of this plan sheet.

Caltrans now has a web site! To get to the web site, go to http://www.dot.ca.gov

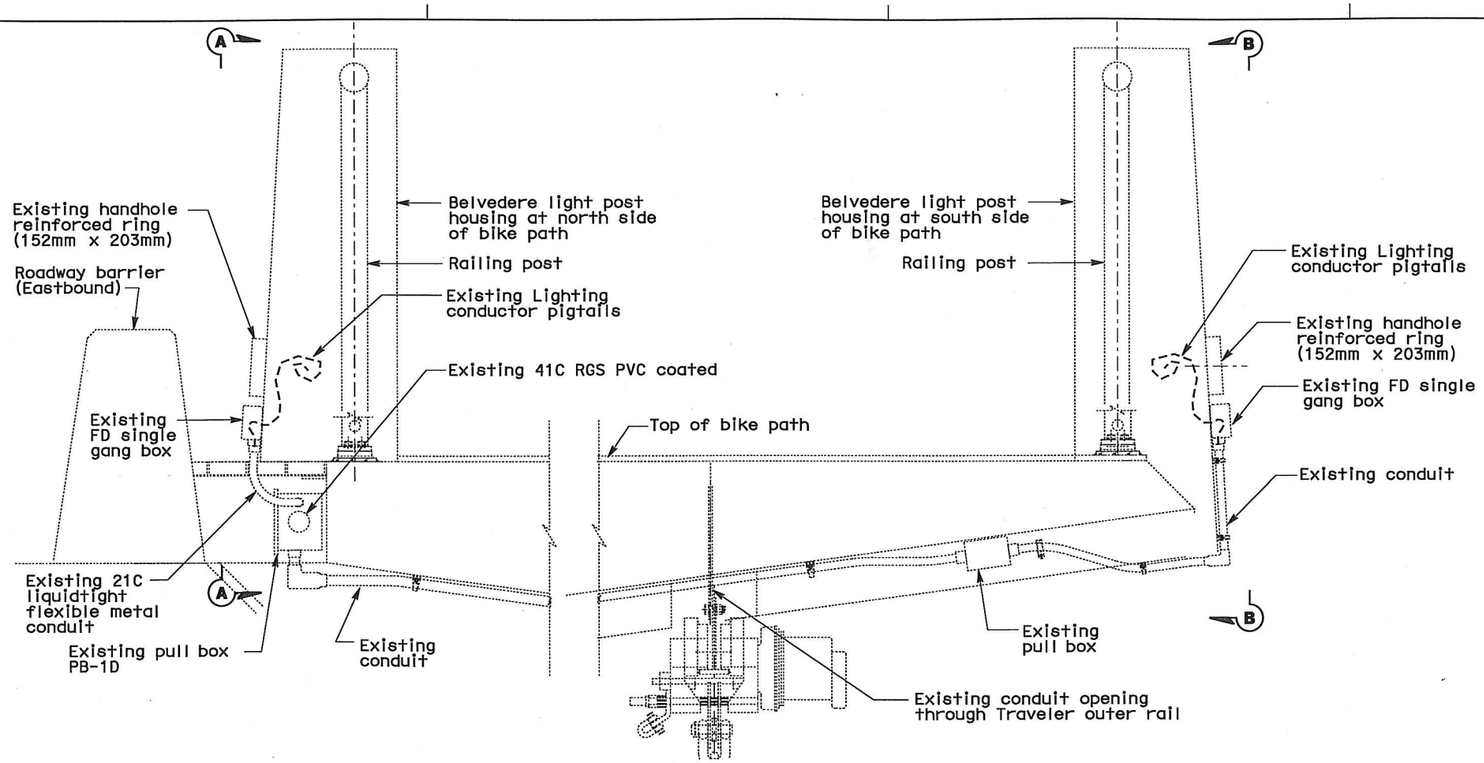

DETAIL 1 - ELEVATION

BIKE PATH BELVEDERE LIGHTING CONDUIT INSTALLATION - WEST SIDE SHOWN
SIMILAR FOR BELVEDERE EAST SIDE

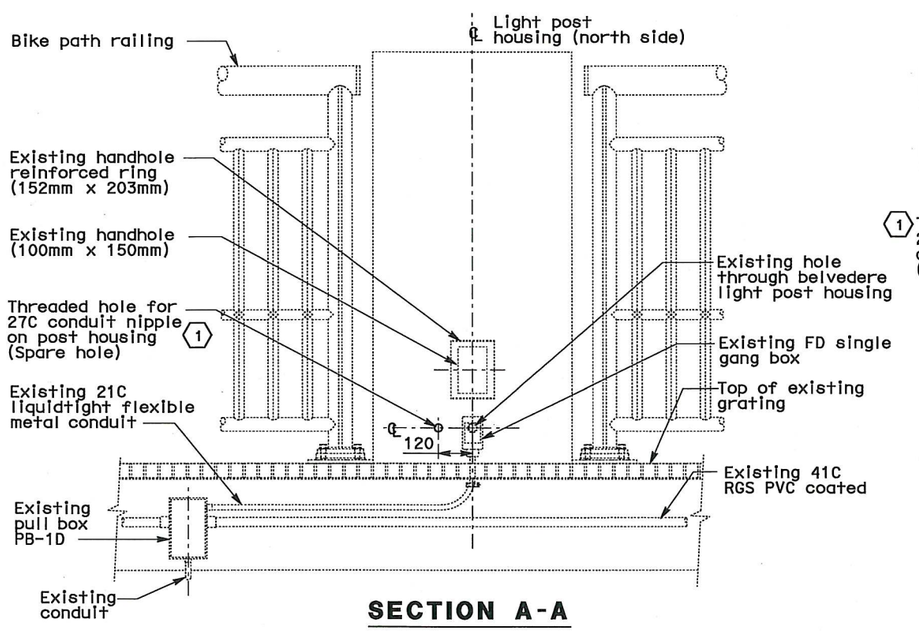

SECTION A-A

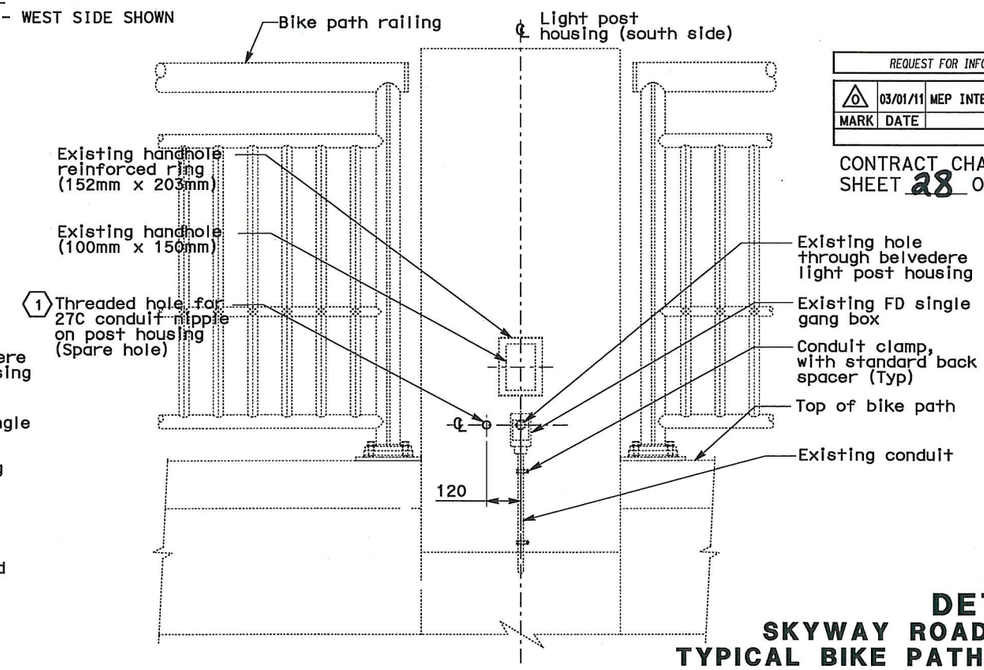

SECTION B-B

SHEET NOTES:

(1) Drill new threaded hole and use threaded plug to cover spare hole for future use.

NOTES:

1. For location of bike path light fixtures and belvedere lights, see plan sheets E-140A through E-140S.
2. Existing condition shown is diagrammatic and may not completely reflect the actual as-built condition. Contractor to verify as-built prior to commencing the required modification.

REQUEST FOR INFORMATION NOT ADDRESSED IN THIS CCO REMAIN IN FORCE

MARK	DATE	DESCRIPTIONS	BY	CH'D	CCO#
0	03/01/11	MEP INTEGRATION REV. & UPGRADES TO SYSTEMS	TW	RG	163

REVISIONS

CONTRACT CHANGE ORDER NO. 163
SHEET 28 OF 32

DETAILS
SKYWAY ROADWAY EASTBOUND
TYPICAL BIKE PATH PLANS AND SECTIONS

SCALE: 1:10

E-165K

THIS PLAN ACCURATE FOR ELECTRICAL WORK ONLY.

ALL DIMENSIONS ARE IN MILLIMETERS UNLESS OTHERWISE SHOWN

FOR REDUCED PLANS ORIGINAL 0 20 40 60 80

DGN FILE =>04-0120f1 0210S10.dgn

LAST REVISION DATE PLOTTED => 03-MAR-2011

STATE OF CALIFORNIA - DEPARTMENT OF TRANSPORTATION

DESIGN OVERSIGHT BEHZAD GOLEMOHAMMADI

CALCULATED/DESIGNED BY CHECKED BY

DATE REVISED BY DATE REVISED

DIST	COUNTY	ROUTE	KILOMETER POST TOTAL PROJECT	SHEET No	TOTAL SHEETS
04	SF	80	13.2/13.9	210 S11	1204

Syn Yee Chin 10/28/10
REGISTERED ELECTRICAL ENGINEER DATE

PLANS APPROVAL DATE

REGISTERED PROFESSIONAL ENGINEER SYN YEE CHIN No. 18186 Exp. 09/30/2011 ELECTRICAL STATE OF CALIFORNIA

PB AMERICAS, Inc.
A Parsons Brinckerhoff Company
303 Second St., Suite 700N
San Francisco, CA 94107-1317

The State of California or its officers or agents shall not be responsible for the accuracy or completeness of electronic copies of this plan sheet.

Caltrans now has a web site! To get to the web site, go to http://www.dot.ca.gov

Metric

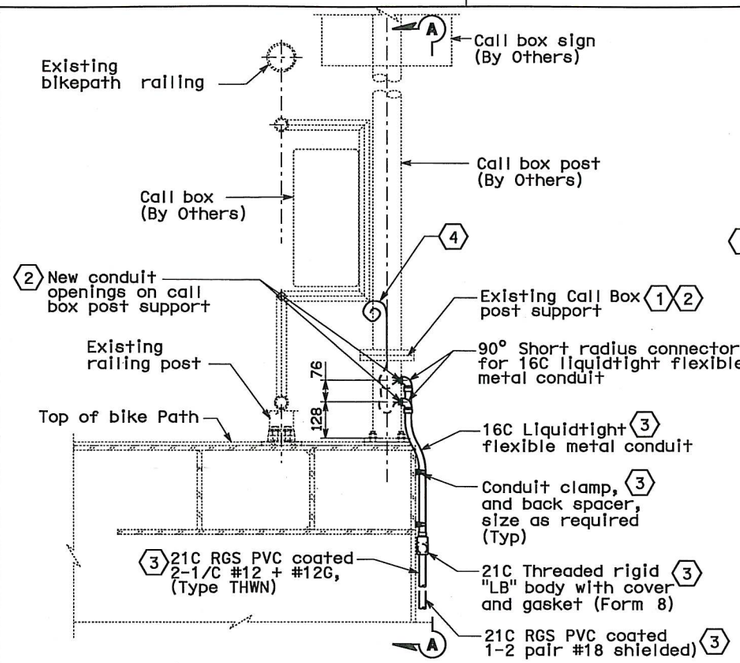

DETAIL 1 - ELEVATION

CALL BOX AT BELVEDERE
SCALE 1:10

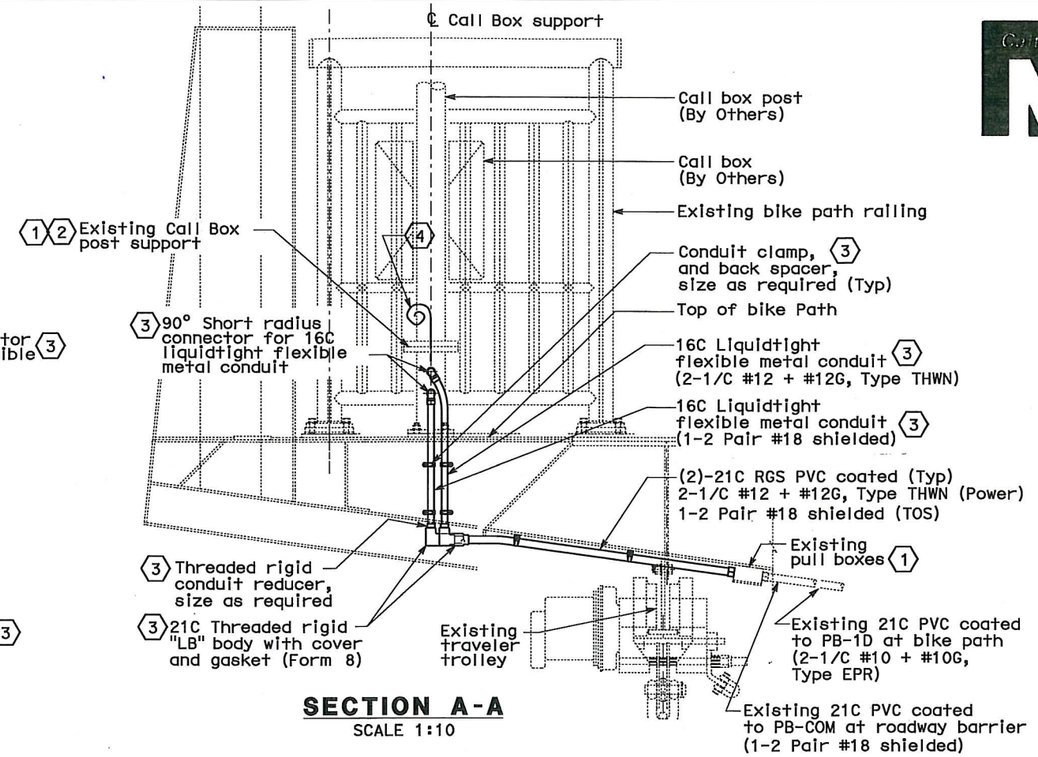

SECTION A-A

SCALE 1:10

SHEET NOTES:

1. Disconnect and remove existing liquidtight flexible metal conduits intended for lighting and Comm. cables between the call box post support and the existing pull box below the bike path girder. Pull back and salvage existing conductors for future use.
2. Provide new threaded holes for 16C liquidtight flexible metal conduit on existing call box post support. Plug existing conduit openings using stainless steel threaded plugs.
3. Install new conduits and fittings between the call box post support and the respective existing pull boxes (lighting and comm.) located below the bike path girder.
4. Contractor shall inspect existing conductors for damage prior to repulling the conductors. Replace damaged conductors with the same type and size. Contractor shall also verify and ensure that there is sufficient length of lighting and Comm. conductor pigtails for future termination to the call box. Seal each conductor end to prevent water from entering the insulation. Pigtails shall be coiled and protected from damage. Provide weatherproof covers for the pigtails and call box supports.

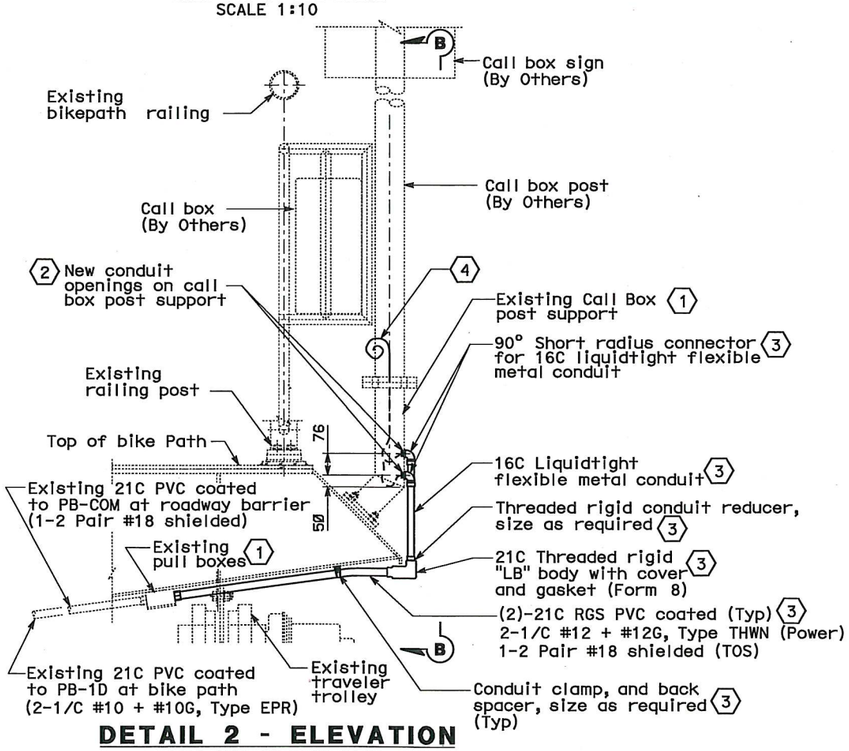

DETAIL 2 - ELEVATION

CALL BOX AT BIKE PATH
SCALE 1:10

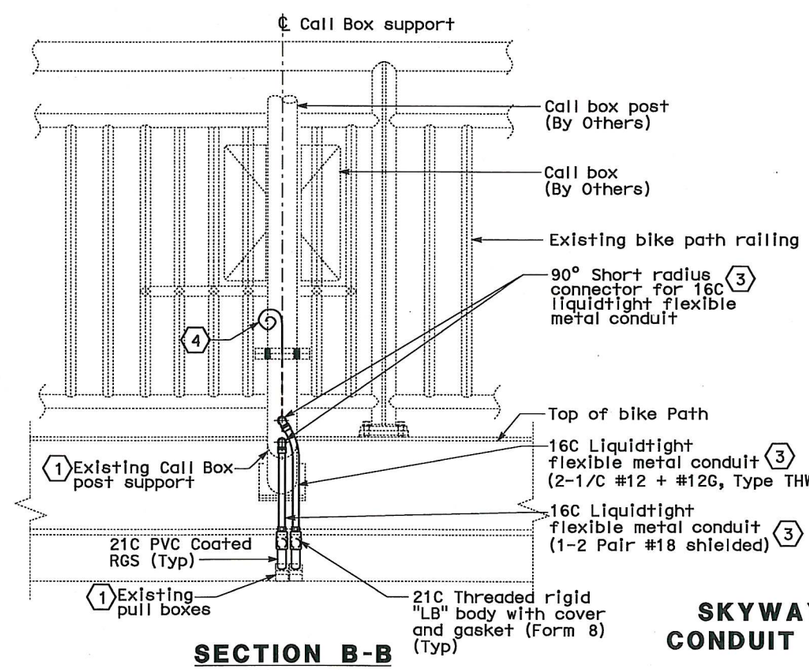

SECTION B-B

SCALE 1:10

NOTES:

1. For call box locations, see plan sheets E-140A through E-140S.
2. All conduit connections shall be watertight.
3. Existing condition shown is diagrammatic and may not completely reflect the actual as-built condition. Contractor to verify as-built prior to commencing the required modification.

REQUEST FOR INFORMATION NOT ADDRESSED IN THIS CCO REMAIN IN FORCE

MARK	DATE	DESCRIPTIONS	BY	CH'D	CCO#
0	05/06/11	MEP INTEGRATION REV. & UPGRADES TO SYSTEMS	TW	RG	163

REVISIONS

CONTRACT CHANGE ORDER NO. 163
SHEET 29 OF 32

DETAILS
SKYWAY ROADWAY EASTBOUND CONDUIT AND PULL BOX LOCATIONS

SCALE AS NOTED

E-165L

THIS PLAN ACCURATE FOR ELECTRICAL WORK ONLY.

ALL DIMENSIONS ARE IN MILLIMETERS UNLESS OTHERWISE SHOWN

REVISED BY	DATE REVISED

CALCULATED/DESIGNED BY	DATE XX/10
CHECKED BY	XX/10

DESIGN OVERSIGHT: BEHZAD GOLEMOHAMMADI

STATE OF CALIFORNIA - DEPARTMENT OF TRANSPORTATION

Caltrans

DATE PLOTTED => 10-MAY-2011
TIME PLOTTED => 16:44

LAST REVISION 00-00-00

FOR REDUCED PLANS ORIGINAL SCALE IS IN MILLIMETERS 0 20 40 60 80

DGN FILE =>04-0120f1_0210S11.dgn
USERNAME =>llorico

CU 04251

EA 0120F1

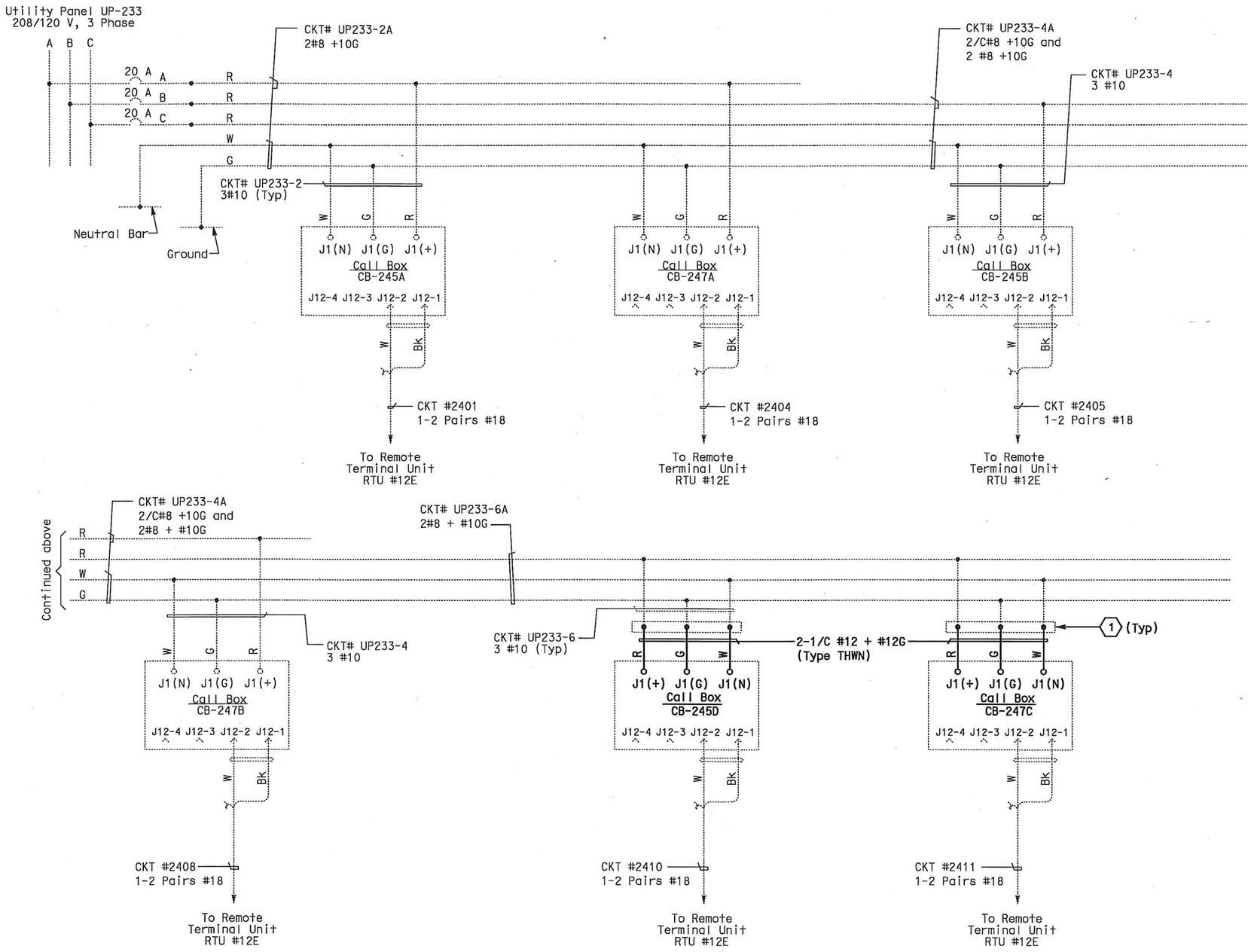

DIST	COUNTY	ROUTE	KILOMETER POST TOTAL PROJECT	SHEET No	TOTAL SHEETS
04	SF, Ala	80	13.2 / 13.9	355S1	1204

Syn Yee Chin 10/28/10
REGISTERED ELECTRICAL ENGINEER DATE

PLANS APPROVAL DATE

REGISTERED PROFESSIONAL ENGINEER SYN YEE CHIN No. 18186 Exp. 09/30/2011 ELECTRICAL STATE OF CALIFORNIA

PB AMERICAS, Inc.
A Parsons Brinckerhoff Company
303 Second St., Suite 700N
San Francisco, CA 94107-1317

The State of California or its officers or agents shall not be responsible for the accuracy or completeness of electronic copies of this plan sheet.

Caltrans now has a web site! To get to the web site, go to http://www.dot.ca.gov

SHEET NOTES:

(1) Existing pull box mounted below bikepath. See Details on sheet E-165L.

NOTES:

1. This sheet is a record drawing from Skyway structure. Existing condition shown may not completely reflect the actual as-built condition. Contractor to verify as-built prior to commencing the required modification. See Sheet EE-338 from Skyway Structures, contract No. 04-012024.
2. Unless shown in bold, everything else shown was part of Skyway Contract.

REQUEST FOR INFORMATION NOT ADDRESSED IN THIS CCO REMAIN IN FORCE

MARK	DATE	DESCRIPTIONS	BY	CH'D	CCO#
0	05/06/11	MEP INTEGRATION REV. & UPGRADES TO SYSTEMS	TW	RG	163
		REVISIONS			

CONTRACT CHANGE ORDER NO. 163
SHEET 30 OF 32

SKYWAY ROADWAY LEVEL EASTBOUND CALL BOX WIRING DIAGRAM

NO SCALE

E-400A

THIS PLAN ACCURATE FOR ELECTRICAL WORK ONLY.

STATE OF CALIFORNIA - DEPARTMENT OF TRANSPORTATION

DESIGN OVERSIGHT: BEHZAD GOLEMOHAMMADI

CALCULATED/DESIGNED BY: XX | CHECKED BY: XX | DATE XX/10 | REVISED BY | DATE REVISED

FOR REDUCED PLANS ORIGINAL SCALE IS IN MILLIMETERS 0 20 40 60 80

DGN FILE =>04-0120f1_0355S01.dgn
USERNAME =>liorico

CU 04251 | EA 0120F1

LAST REVISION 00-00-00 | DATE PLOTTED => 10-MAY-2011 | TIME PLOTTED => 16:44

DIST	COUNTY	ROUTE	KILOMETER POST TOTAL PROJECT	SHEET No	TOTAL SHEETS
04	SF,Ala	80	13.2 / 13.9	355S2	1204

Syn Yee Chin 10/28/10
REGISTERED ELECTRICAL ENGINEER DATE

PLANS APPROVAL DATE

REGISTERED PROFESSIONAL ENGINEER SYN YEE CHIN No. 18186 Exp. 09/30/2011 ELECTRICAL STATE OF CALIFORNIA

PB AMERICAS, Inc.
A Parsons Brinckerhoff Company
303 Second St., Suite 700N
San Francisco, CA 94107-1317

The State of California or its officers or agents shall not be responsible for the accuracy or completeness of electronic copies of this plan sheet.

Caltrans now has a web site! To get to the web site, go to http://www.dot.ca.gov

Metric

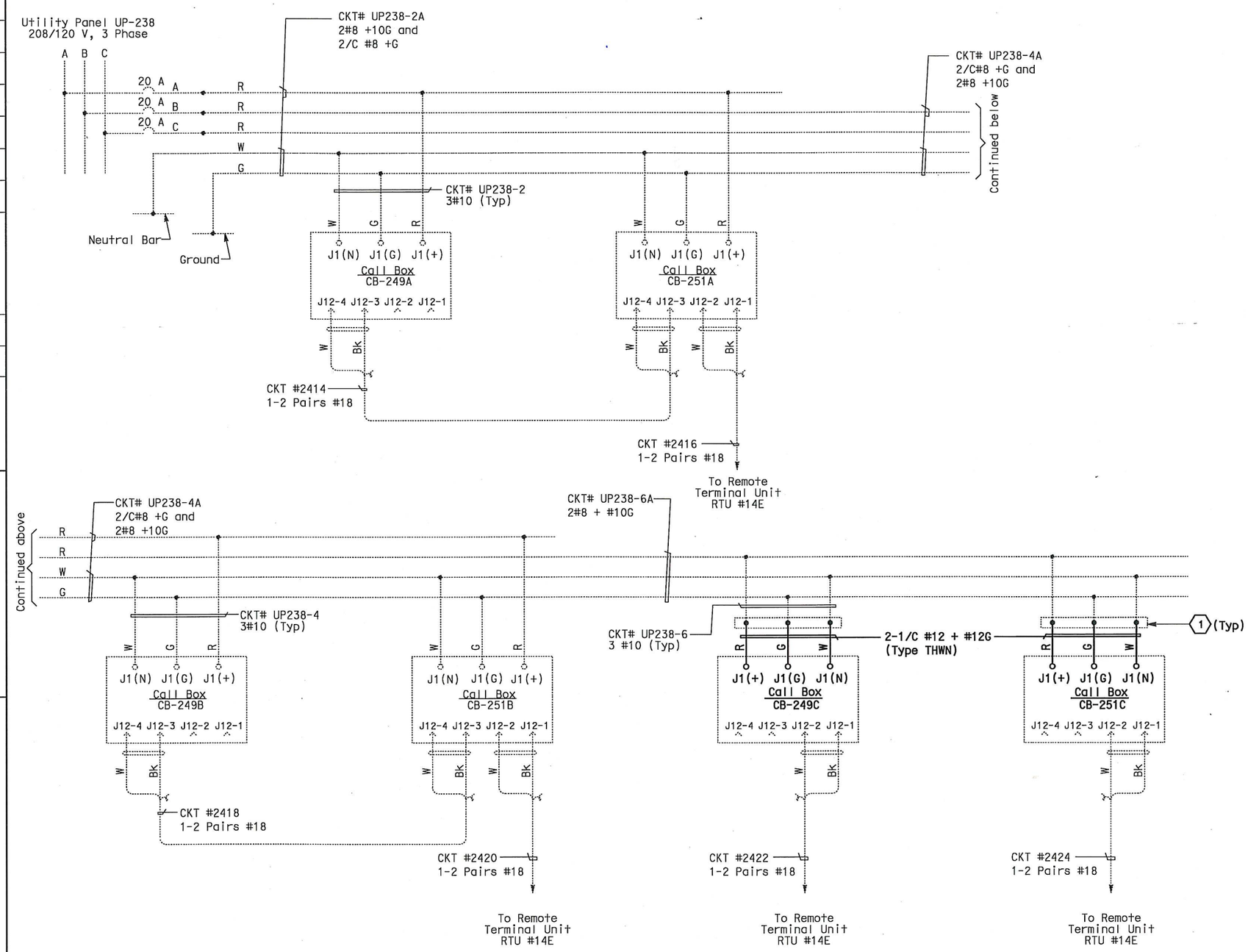

SHEET NOTES:

(1) Existing pull box mounted below bikepath. See Details on sheet E-165L.

NOTES:

1. This sheet is a record drawing from Skyway structure. Existing condition shown may not completely reflect the actual as-built condition. Contractor to verify as-built prior to commencing the required modification. See Sheet EE-339 from Skyway Structures, contract No. 04-012024.
2. Unless shown in bold, everything else shown was part of Skyway Contract.

REQUEST FOR INFORMATION NOT ADDRESSED IN THIS CCO REMAIN IN FORCE

MARK	DATE	DESCRIPTIONS	BY	CH'D	CCO#
0	05/06/11	MEP INTEGRATION REV. & UPGRADES TO SYSTEMS	TW	RG	163

REVISIONS

CONTRACT CHANGE ORDER NO. 163
SHEET 31 OF 32

SKYWAY ROADWAY LEVEL EASTBOUND CALL BOX WIRING DIAGRAM

NO SCALE

E-400B

THIS PLAN ACCURATE FOR ELECTRICAL WORK ONLY.

STATE OF CALIFORNIA - DEPARTMENT OF TRANSPORTATION
Caltrans

DESIGN OVERSIGHT: BEHZAD GOLEMOHAMMADI

CALCULATED/DESIGNED BY: XX | DATE XX/10 | REVISED BY
CHECKED BY: XX | XX/10 | DATE REVISED

LAST REVISION 00-00-00
DATE PLOTTED => 10-MAY-2011
TIME PLOTTED => 16:44

FOR REDUCED PLANS ORIGINAL SCALE IS IN MILLIMETERS 0 20 40 60 80

DGN FILE =>04-0120f1_0355S02.dgn
USERNAME =>llorico

CU 04251 | EA 0120F1

DIST	COUNTY	ROUTE	KILOMETER POST TOTAL PROJECT	SHEET No	TOTAL SHEETS
04	SF,Ala	80	13.2 / 13.9	355S3	1204

Syn Yee Chin 10/28/10
REGISTERED ELECTRICAL ENGINEER DATE

REGISTERED PROFESSIONAL ENGINEER SYN YEE CHIN No. 18186 Exp. 09/30/2011 ELECTRICAL STATE OF CALIFORNIA

PLANS APPROVAL DATE

PB AMERICAS, Inc.
A Parsons Brinckerhoff Company
303 Second St., Suite 700N
San Francisco, CA 94107-1317

The State of California or its officers or agents shall not be responsible for the accuracy or completeness of electronic copies of this plan sheet.

Caltrans now has a web site! To get to the web site, go to http://www.dot.ca.gov

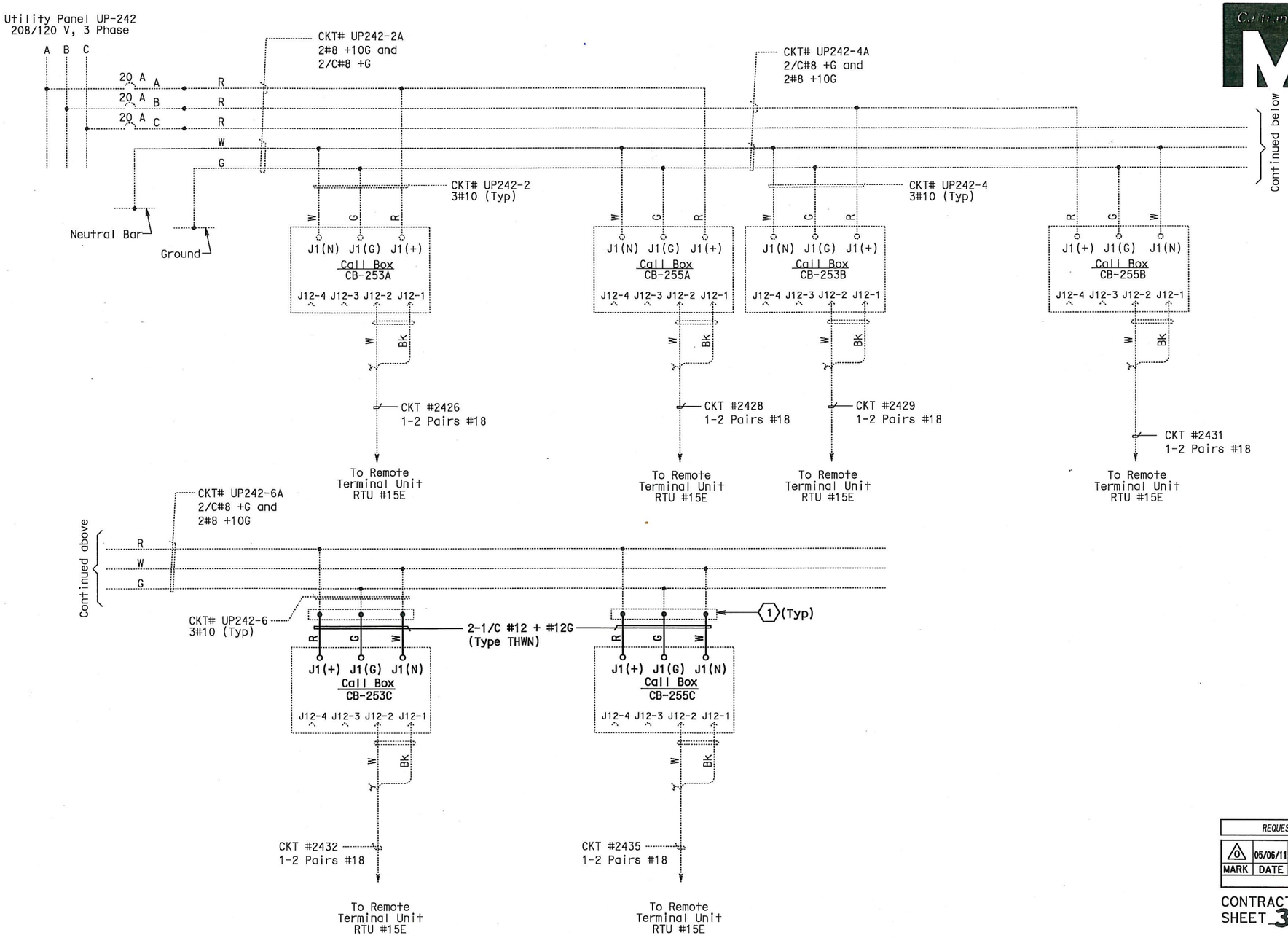

SHEET NOTES:

(1) Existing pull box mounted below bikepath. See Details on sheet E-165L.

NOTES:

1. This sheet is a record drawing from Skyway structure. Existing condition shown may not completely reflect the actual as-built condition. Contractor to verify as-built prior to commencing the required modification. See Sheet EE-340 from Skyway Structures, contract No. 04-012024.
2. Unless shown in bold, everything else shown was part of Skyway Contract.

REQUEST FOR INFORMATION NOT ADDRESSED IN THIS CCO REMAIN IN FORCE

MARK	DATE	DESCRIPTIONS	BY	CH'D	CCO#
0	05/06/11	MEP INTEGRATION REV. & UPGRADES TO SYSTEMS	TW	RG	163

REVISIONS

CONTRACT CHANGE ORDER NO. 163
SHEET 32 OF 32

SKYWAY ROADWAY LEVEL EASTBOUND CALL BOX WIRING DIAGRAM

NO SCALE

E-400C

REVISED BY	DATE REVISED
XX	XX/XX/10

CALCULATED/DESIGNED BY	CHECKED BY
XX	XX

DESIGN OVERSIGHT
BEHZAD GOLEMOHAMMADI

STATE OF CALIFORNIA - DEPARTMENT OF TRANSPORTATION

THIS PLAN ACCURATE FOR ELECTRICAL WORK ONLY.

FOR REDUCED PLANS ORIGINAL SCALE IS IN MILLIMETERS 0 20 40 60 80

DGN FILE =>04-0120f1_0355S03.dgn
USERNAME =>llorico

CU 04251 | EA 0120F1

DATE PLOTTED => 10-MAY-2011
TIME PLOTTED => 16:44

LAST REVISION 00-00-00