Dist	COUNTY	ROUTE	KILOMETER POST TOTAL PROJECT	SHEET No.	TOTAL SHEETS
04	SF,Ala	80	12.7/14.3, 0.0/2.7	50R1	84

REGISTERED ELECTRICAL ENGINEER 2/12/10 DATE

5-10-2010
PLANS APPROVAL DATE

REGISTERED PROFESSIONAL ENGINEER DAVID H. OTO No. 10699 Exp. 06/30/2011 ELECTRICAL STATE OF CALIFORNIA

THE STATE OF CALIFORNIA OR ITS OFFICERS OR AGENTS SHALL NOT BE RESPONSIBLE FOR THE ACCURACY OR COMPLETENESS OF ELECTRONIC COPIES OF THIS PLAN SHEET.

PB AMERICAS, Inc.
303 Second St., Suite 700N
San Francisco, CA 94107-1317

DIST	COUNTY	ROUTE	KILOMETER POST TOTAL PROJECT	SHEET No	TOTAL SHEETS
04	Ala	80	1.6/2.7	379R2	643

REGISTERED ELECTRICAL ENGINEER 05/15/06 DATE

1-29-07
PLANS APPROVAL DATE

REGISTERED PROFESSIONAL ENGINEER JENS ERLINGSSON No. 8249 Exp. 9/30/08 ELECTRICAL STATE OF CALIFORNIA

PB POWER, Inc.
A Parsons Brinckerhoff Company
303 Second St., Suite 700N
San Francisco, CA 94107-1317

The State of California or its officers or agents shall not be responsible for the accuracy or completeness of electronic copies of this plan sheet.

To get to the Caltrans web site, go to: http://www.dot.ca.gov

SHEET NOTES:

1. ~~For Call Box conduit installation, see sheet E-39.~~
2. The Demonstration Roadway Lighting Assembly is to be powered from the Skyway Westbound Midspan Substation. The 480 V conductors + ground from the Midspan Substation to the pull box (PB-LTG), adjacent to the lighting assembly, have been installed under a different contract. The Contractor shall splice the existing 480 V + ground conductors in the two PB-LTG pull boxes nearest the lighting assembly to provide for conductor continuity from the Midspan Substation to the lighting assembly. In addition, the Contractor shall install 2#10 + #10 ground conductors from the lighting assembly to the nearest PB-LTG pull box and splice the conductors to the existing conductors in the PB-LTG.
3. Except for the Demonstration Roadway Lighting assembly.
4. Down, conduit stub-out for future light pipe, See sheet E-28A.

NOTES:

1. References:
   - For typical details and locations of conduit connections to light poles, barrier outlet boxes, call boxes and CMS, see sheets E-37 and E-38.
   - For types of pull boxes, splice boxes and enclosures, see sheet E-44.
   - ~~For Call Box schedule and wiring diagram, see sheets E-170 to E-172.~~
   - For light pole location, see sheet E-38.
   - For 480 V roadway lighting wiring diagram, see sheet E-47 and E-48.
   - For conduit and cable tray schedules, see sheets starting at E-224.
   - For details of Roadway Lighting Assembly see sheets starting at E-243.
   - For installation of conduits inside demonstration lighting pole, see sheets E-15A and E-15B.

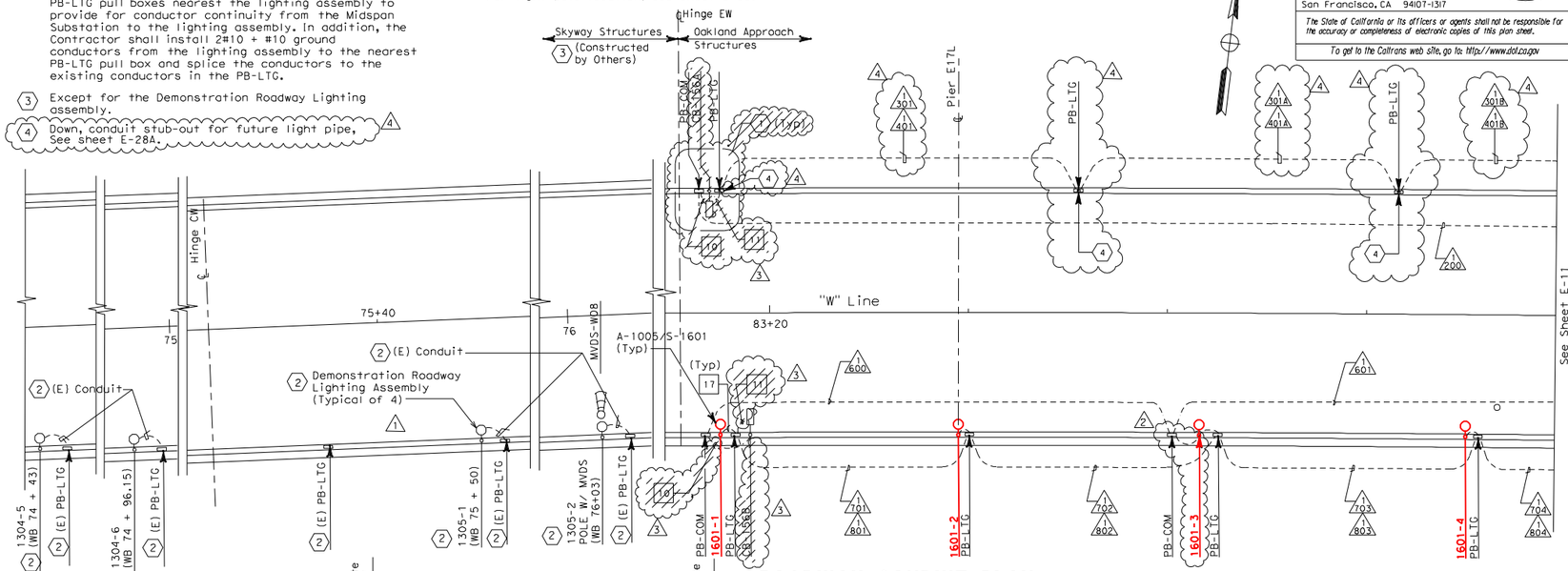

ROADWAY CONDUIT PLAN

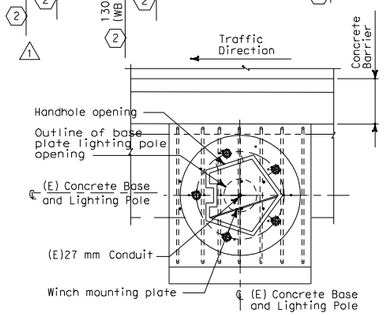

CONDUIT STUB UP PLAN

FOR 20 METER HIGH LIGHTING POLES (1304-5, 1304-6 AND 1305-1)
NO SCALE

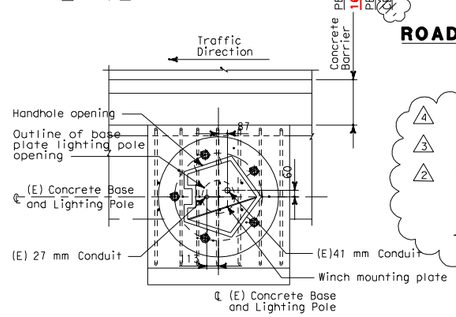

CONDUIT STUB UP PLAN

20 METER HIGH LIGHTING POLE (1305-2) WITH MVDS
NO SCALE

THIS PLAN IS ACCURATE FOR ELECTRICAL WORK ONLY.

REGISTERED PROFESSIONAL ENGINEER FADI WALIEDDINE No. 11465 Exp. 12/31/2009 ELECTRICAL STATE OF CALIFORNIA

REGISTERED PROFESSIONAL ENGINEER S. A. ESTOQUE No. E-10151 Exp. 12/31/2008 ELECTRICAL STATE OF CALIFORNIA

MARK	DATE	DESCRIPTIONS	REV	CK	CCO NO.
4	8/29/08	Added conduit nos. 1301A, 1301B, 1401A, 1401B, PB-LTG. sheet note 4, Re-routed conduits 1301 and 1401	EJL	ECR	LIGHT PIPE
3	8/29/08	Deleted CB-156A, CB-156B, Project Notes 10 and 11, Sheet Note 1 and Call Box Reference Note.	EJL	ECR	18S1
2	8/29/08	Added Conduit To Pole 1601-3	EJL	ECR	Ltg. Pole Base
1	1/9/08	Added Demonstration Pole 1304-5	EJL	SE	39

REVISIONS

CONTRACT CHANGE ORDER NO._____
SHEET _____ OF _____

ROADWAY AND GIRDER LEVEL WESTBOUND
(LIGHTING AND ELECTRICAL SYSTEMS)

SCALE: 1:200

E-10

"CCO ____ DRAFT"
08/25/2010

FOR ROADWAY LIGHTING POLES
REFERENCE ONLY

ROADWAY LIGHTING POLE PLAN LOCATION-SHEET 29
OAKLAND APPROACH STRUCTURES

NO SCALE

E-48

STATE OF CALIFORNIA - DEPARTMENT OF TRANSPORTATION
Caltrans

CONSULTANT FUNCTIONAL SUPERVISOR: BRADY NADELL
CALCULATED-DESIGNED BY / CHECKED BY

JEFFRI HALIM / ELLERY LUCAS
CALCULATED/DESIGNED BY / CHECKED BY
FK / AB
DATE 2/06 / 2/06
REVISED BY / DATE REVISED

DESIGN OVERSIGHT: BEHZAD GOLEMOHAMMADI

STATE OF CALIFORNIA - DEPARTMENT OF TRANSPORTATION
Caltrans

LAST REVISION 00-00-00
DATE PLOTTED => 8/24/2010
TIME PLOTTED => 3:19:23 PM

FOR REDUCED PLANS ORIGINAL SCALE IS IN MILLIMETERS 0 20 40 60 80
DGN FILE =>T:\13103\MS\pse\SFOBB Roadway Light Pole\CCO for SAS MEP\E-48R01.dgn
USERNAME =>fusco
CU 04251
EA 0120L1

BORDER LAST REVISED 3/1/2007
RELATIVE BORDER SCALE IS IN MILLIMETERS 0 20 40 60 80
USERNAME => fusco
DGN FILE => T:\13103\MS\pse\SFOBB Roadway Light Pole\CCO for SAS MEP\E-48R01.dgn

LAST REVISION 08-17-09
DATE PLOTTED => 8/24/2010
TIME PLOTTED => 3:19:23 PM