DIST.	COUNTY	ROUTE	KILOMETER POST TOTAL PROJECT	SHEET NO.	TOTAL SHEETS
04	SF	80	13.2/13.9	845S1	1204

REGISTERED ENGINEER - CIVIL

01-13-12
PLANS APPROVAL DATE

REGISTERED PROFESSIONAL ENGINEER Marwan N. Nader No. C 054426 Exp. 12/31/13 CIVIL STATE OF CALIFORNIA

The State of California or its officers or agents shall not be responsible for the accuracy or completeness of electronic copies of this plan sheet.

T.Y. LIN / MOFFATT & NICHOL
825 BATTERY STREET
SAN FRANCISCO, CA 94111

Caltrans now has a web site! To get to the web site, go to: http://www.dot.ca.gov

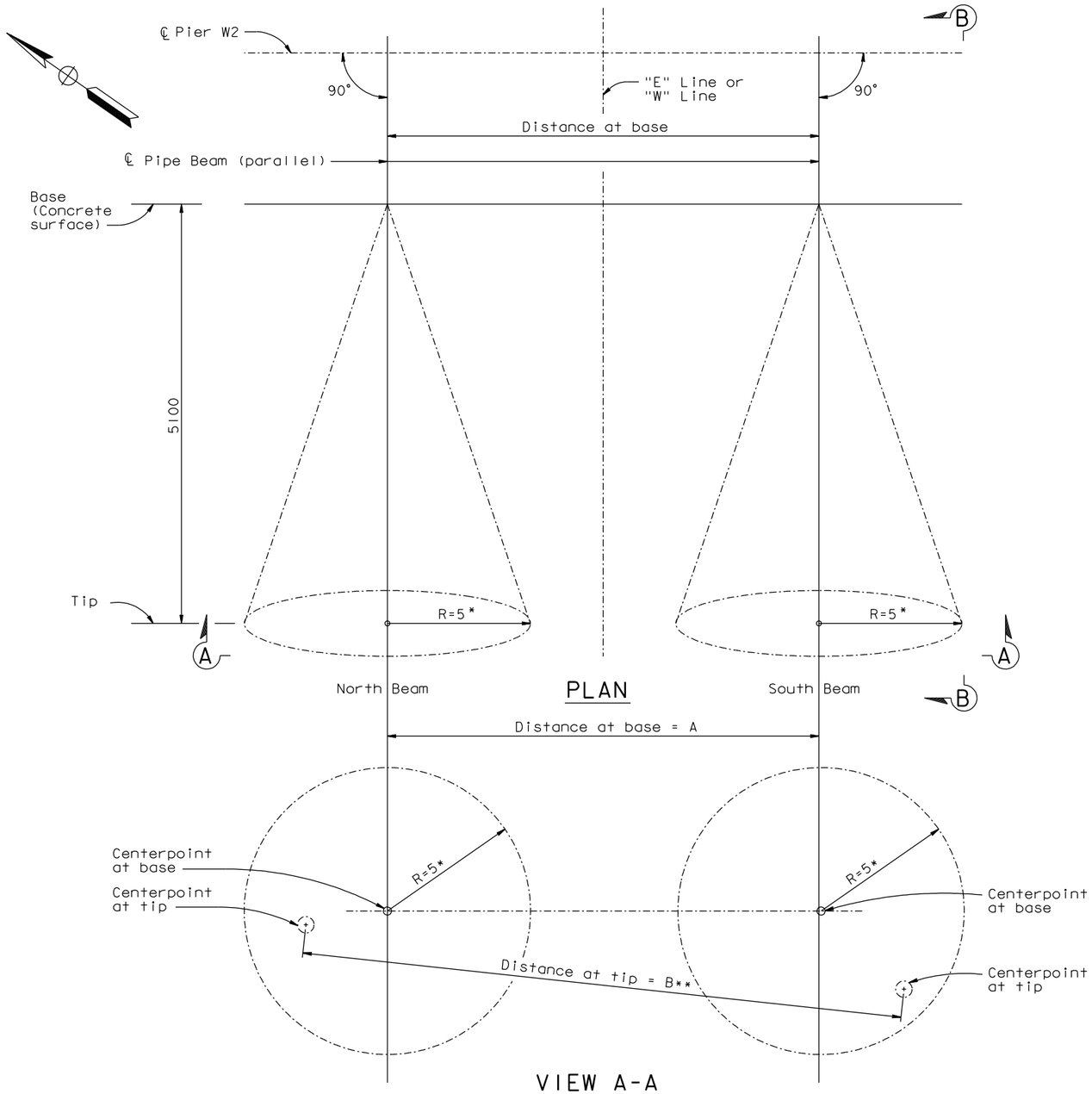

VIEW A-A

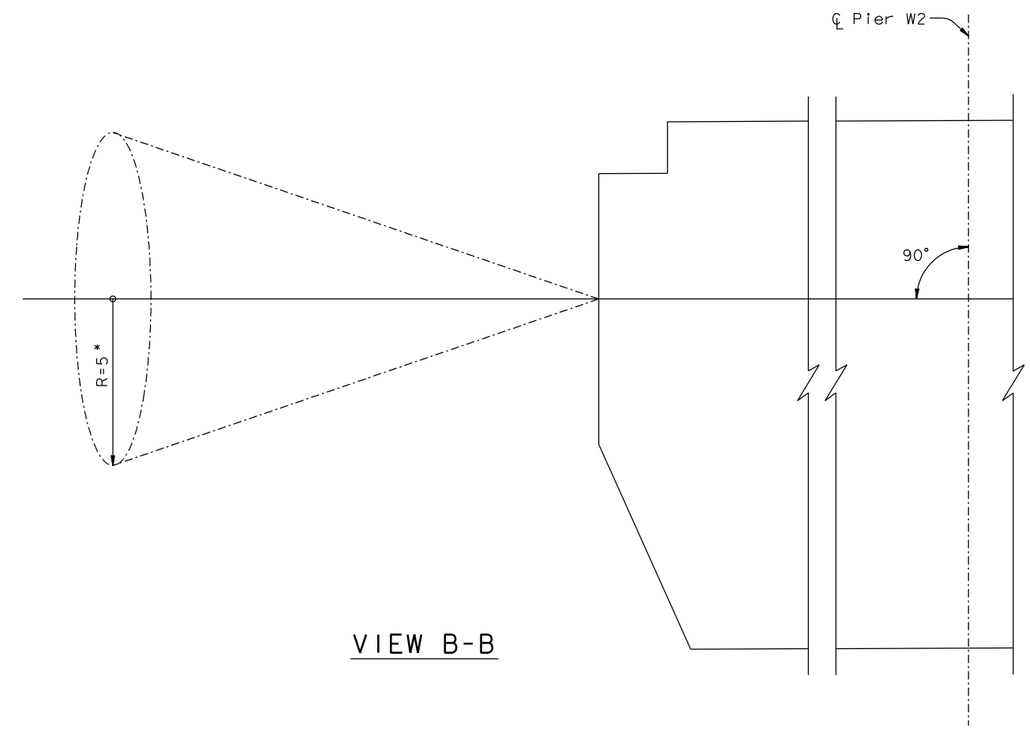

VIEW B-B

HINGE K PIPE BEAM ERECTION TOLERANCES

* Maximum allowable offset in any direction of centerpoint at tip of individual pipe beam = 5 mm

** Maximum allowable out-of-parallel between 2 pipe beams = Absolute Value [A-B] = 5 mm

CONTRACT CHANGE ORDER NO. ____
SHEET ___ OF ___

REQUESTS FOR INFORMATION NOT ADDRESSED IN THIS CCO REMAIN IN FORCE

ALL DIMENSIONS ARE IN MILLIMETERS UNLESS OTHERWISE SHOWN

R. Valizadeh/V. Toan/Y.L./W.L./F.C.
DESIGN OVERSIGHT
Roya Valizadeh / Vong Toan / Y. Liu
SIGN OFF DATE 01/13/12

MARK	DATE	DESCRIPTIONS	BY	CH'D	CCO#
0	01/13/12	HINGE K MODIFICATIONS	NV	MN	153

REVISIONS

	BY	CHECKED
DESIGN	N. Vo	M. Nader
DETAILS	N. Vo	M. Nader
QUANTITIES	N. Vo	M. Nader

PREPARED FOR THE STATE OF CALIFORNIA DEPARTMENT OF TRANSPORTATION

R. Manzanarez
PROJECT ENGINEER

BRIDGE NO. 34-0006L/R
KILOMETER POST 13.2/13.9

SAN FRANCISCO OAKLAND BAY BRIDGE
EAST SPAN SEISMIC SAFETY PROJECT
SELF-ANCHORED SUSPENSION BRIDGE
(SUPERSTRUCTURE & TOWER)

HINGE K DETAILS NO. 3

Rev. Date: 5-18-98

ORIGINAL SCALE IN MILLIMETERS FOR REDUCED PLANS 0 10 20 30 40 50 60 70 80 90 100

CU 04
EA 0120F1

DISREGARD PRINTS BEARING EARLIER REVISION DATES

REVISION DATES (PRELIMINARY STAGE ONLY) 01/13/12

SHEET 428S1 OF

FILE => I:\bb\04-012001\sas\contract plans and cco\cco\cco#153\2-revision 01-13-12\dgn\ahhng04ka.dgn

100% PS&E

USERNAME => DWinrow DATE PLOTTED => 12 JAN 2012 TIME PLOTTED => 14:27:39

DIST.	COUNTY	ROUTE	KILOMETER POST TOTAL PROJECT	SHEET NO.	TOTAL SHEETS
04	SF	80	13.2/13.9	845S2	1204

Caltrans Metric

REGISTERED ENGINEER - CIVIL

01-13-12
PLANS APPROVAL DATE

REGISTERED PROFESSIONAL ENGINEER
Marwan N. Nader
No. C 054426
Exp. 12/31/13
CIVIL
STATE OF CALIFORNIA

The State of California or its officers or agents shall not be responsible for the accuracy or completeness of electronic copies of this plan sheet.

T.Y. LIN / MOFFATT & NICHOL
825 BATTERY STREET
SAN FRANCISCO, CA 94111

Caltrans now has a web site! To get to the web site, go to: http://www.dot.ca.gov

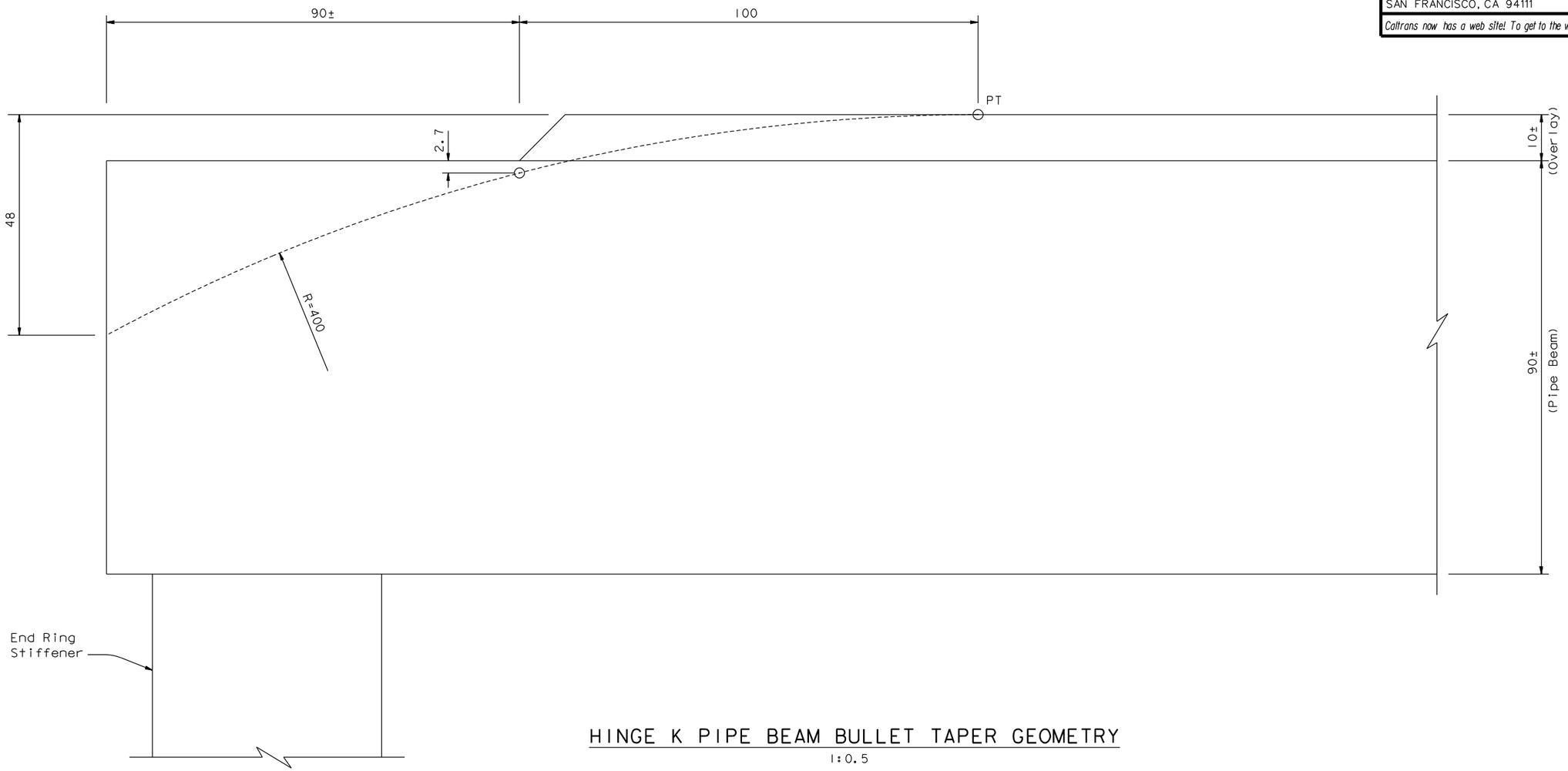

HINGE K PIPE BEAM BULLET TAPER GEOMETRY
1:0.5

CONTRACT CHANGE ORDER NO. _____
SHEET ____ OF ____

REQUESTS FOR INFORMATION NOT ADDRESSED IN THIS CCO REMAIN IN FORCE

ALL DIMENSIONS ARE IN MILLIMETERS UNLESS OTHERWISE SHOWN

R. Valizadeh/V. Toan/Y.L./W.L./F.C.
DESIGN OVERSIGHT
Roger Valizadeh / Vong Toan / Y. Lin
SIGN OFF DATE 01/13/12

MARK	DATE	DESCRIPTIONS	BY	CH'D	CCO#
0	01/13/12	HINGE K MODIFICATIONS	NV	MN	153

REVISIONS

	BY	CHECKED
DESIGN	N. Vo	M. Nader
DETAILS	N. Vo	M. Nader
QUANTITIES	N. Vo	M. Nader

PREPARED FOR THE STATE OF CALIFORNIA DEPARTMENT OF TRANSPORTATION

R. Manzanarez
PROJECT ENGINEER

BRIDGE NO. 34-0006L/R
KILOMETER POST 13.2/13.9

SAN FRANCISCO OAKLAND BAY BRIDGE
EAST SPAN SEISMIC SAFETY PROJECT
SELF-ANCHORED SUSPENSION BRIDGE
(SUPERSTRUCTURE & TOWER)

HINGE K DETAILS NO. 4

Rev. Date: 5-18-98

ORIGINAL SCALE IN MILLIMETERS FOR REDUCED PLANS 0 10 20 30 40 50 60 70 80 90 100

CU 04
EA 0120F1

DISREGARD PRINTS BEARING EARLIER REVISION DATES

REVISION DATES (PRELIMINARY STAGE ONLY) 01/13/12

SHEET 428S2 OF

FILE => I:\bb\04-012001\sas\contract plans and cco\cco\cco#153\2-revision 01-13-12\dgn\ahhng04kb.dgn

100 % PS&E

USERNAME => DWinrow DATE PLOTTED => 12 JAN 2012 TIME PLOTTED => 14:28:36

DIST.	COUNTY	ROUTE	KILOMETER POST TOTAL PROJECT	SHEET NO.	TOTAL SHEETS
04	SF	80	13.2/13.9	848S1	1204

Caltrans Metric

REGISTERED ENGINEER - CIVIL

01-13-12

PLANS APPROVAL DATE

PROFESSIONAL ENGINEER REGISTERED Marwan N. Nader No. C 054426 Exp. 12/31/13 CIVIL STATE OF CALIFORNIA

The State of California or its officers or agents shall not be responsible for the accuracy or completeness of electronic copies of this plan sheet.

T.Y. LIN / MOFFATT & NICHOL
825 BATTERY STREET
SAN FRANCISCO, CA 94111

Caltrans now has a web site! To get to the web site, go to: http://www.dot.ca.gov

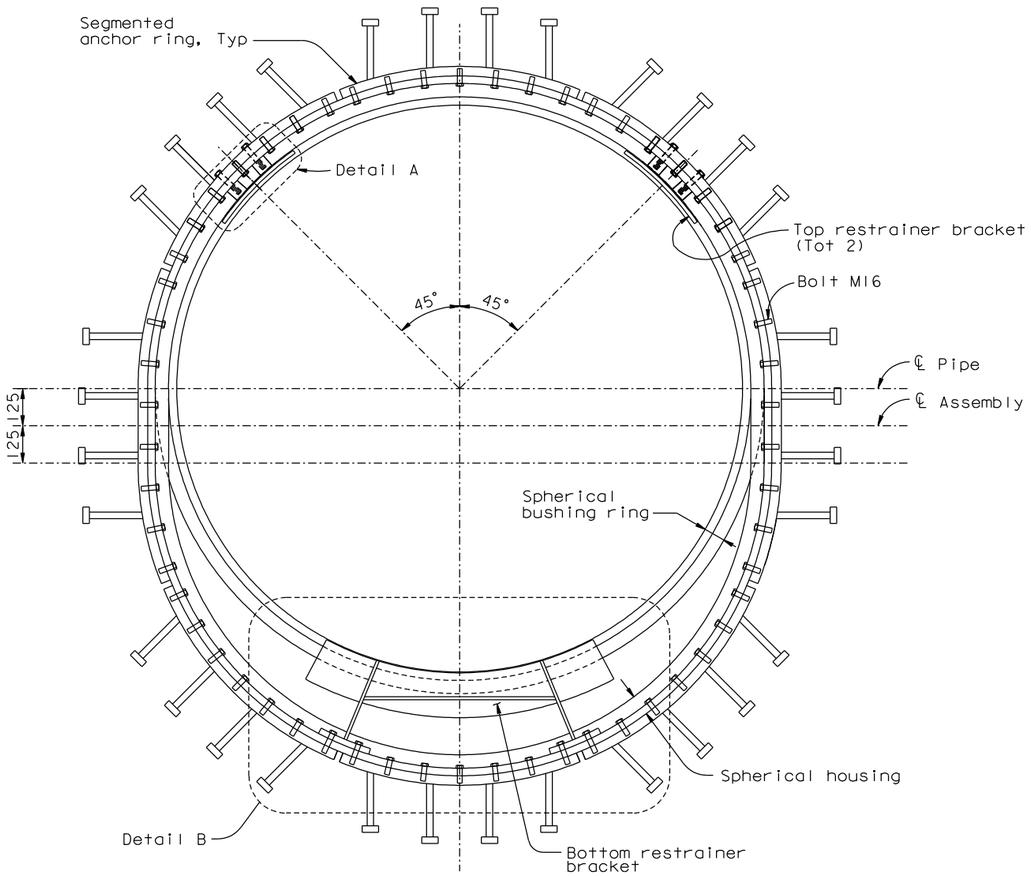

TEMPORARY RESTRAINT BRACKETS (Hinge K Bearing)

1:10

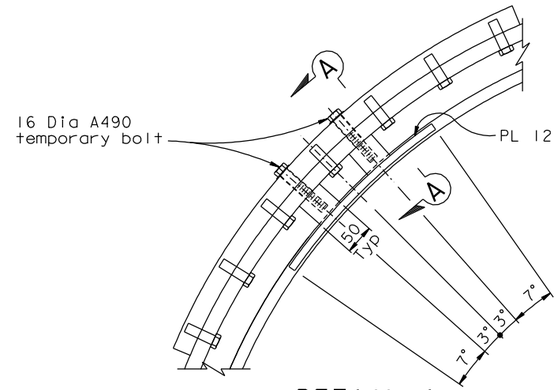

DETAIL A (Shear studs not shown for clarity)

1:5

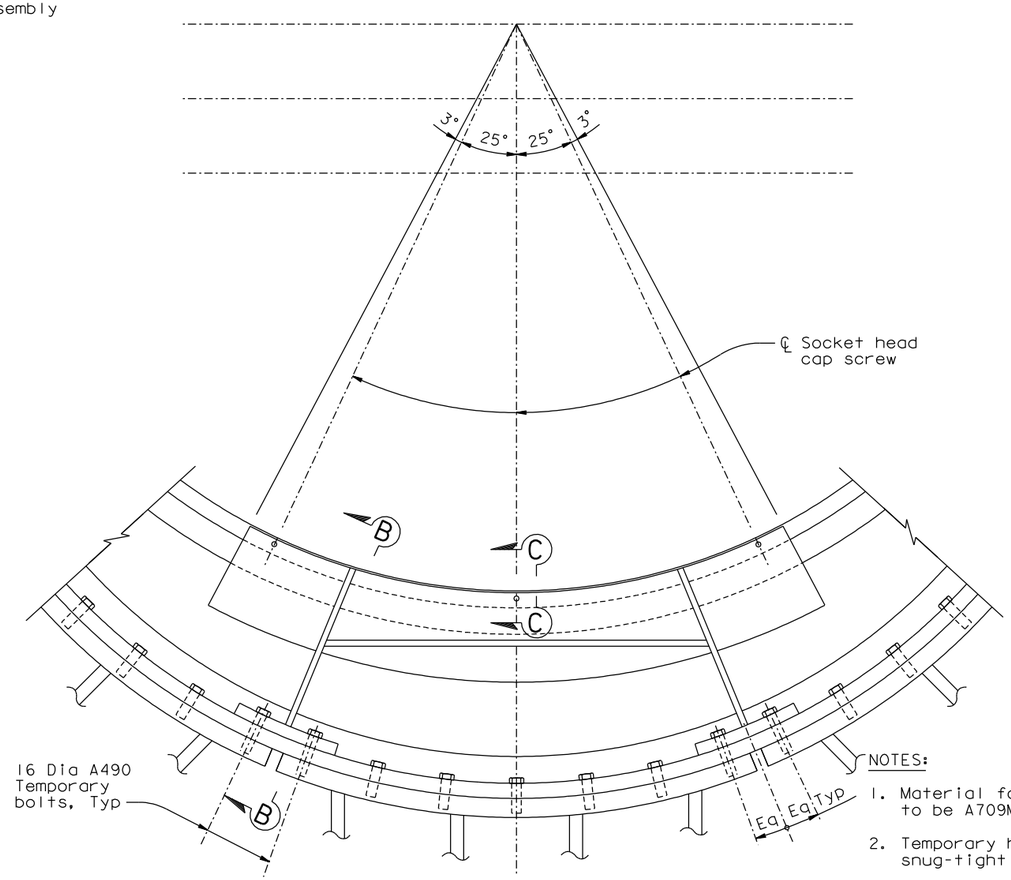

DETAIL B

1:5

NOTES:

1. Material for temporary restraint brackets to be A709M Grade 250.
2. Temporary high-strength bolts to be installed snug-tight plus 1/8 turn (45 degrees).
3. For Sections A-A, B-B and C-C, see "Hinge K Bearing Details No.5" sheet.

CONTRACT CHANGE ORDER NO. _____
SHEET ____ OF ____

REQUESTS FOR INFORMATION NOT ADDRESSED IN THIS CCO REMAIN IN FORCE

ALL DIMENSIONS ARE IN MILLIMETERS UNLESS OTHERWISE SHOWN

R. Valizadeh/V. Toan/Y.L./W.L./F.C.
DESIGN OVERSIGHT
SIGN OFF DATE 01/13/12

MARK	DATE	DESCRIPTIONS	BY	CH'D	CCO#
0	01/13/12	HINGE K MODIFICATIONS	NV	MN	153

REVISIONS

	BY	CHECKED
DESIGN	N. Vo	M. Nader
DETAILS	N. Vo	M. Nader
QUANTITIES	N. Vo	M. Nader

PREPARED FOR THE STATE OF CALIFORNIA DEPARTMENT OF TRANSPORTATION

R. Manzanarez
PROJECT ENGINEER

BRIDGE NO. 34-0006L/R
KILOMETER POST 13.2/13.9

SAN FRANCISCO OAKLAND BAY BRIDGE
EAST SPAN SEISMIC SAFETY PROJECT
SELF-ANCHORED SUSPENSION BRIDGE
(SUPERSTRUCTURE & TOWER)

HINGE K BEARING DETAILS NO. 4

Rev. Date: 5-18-98

ORIGINAL SCALE IN MILLIMETERS FOR REDUCED PLANS 0 10 20 30 40 50 60 70 80 90 100

CU 04
EA 0120F1

DISREGARD PRINTS BEARING EARLIER REVISION DATES → 01/13/12

REVISION DATES (PRELIMINARY STAGE ONLY)

SHEET 431S1 OF

FILE => I:\bb\04-012001\sas\contract plans and cco\cco\cco*153\2-revision 01-13-12\dgn\ahhng08ka.dgn

USERNAME => DWinrow DATE PLOTTED => 12 JAN 2012 TIME PLOTTED => 14:29:32

100% PS&E

DIST.	COUNTY	ROUTE	KILOMETER POST TOTAL PROJECT	SHEET NO.	TOTAL SHEETS
04	SF	80	13.2/13.9	848S2	1204

REGISTERED ENGINEER - CIVIL

01-13-12

PLANS APPROVAL DATE

REGISTERED PROFESSIONAL ENGINEER Marwan N. Nader No. C 054426 Exp. 12/31/13 CIVIL STATE OF CALIFORNIA

The State of California or its officers or agents shall not be responsible for the accuracy or completeness of electronic copies of this plan sheet.

T.Y. LIN / MOFFATT & NICHOL
825 BATTERY STREET
SAN FRANCISCO, CA 94111

Caltrans now has a web site! To get to the web site, go to: http://www.dot.ca.gov

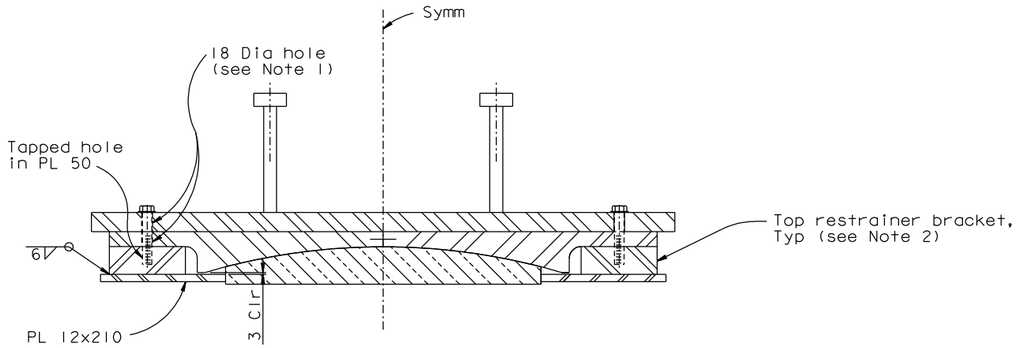

SECTION A-A
1:5

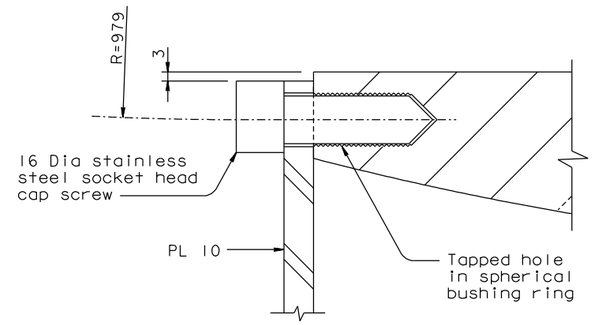

SECTION C-C
1:1

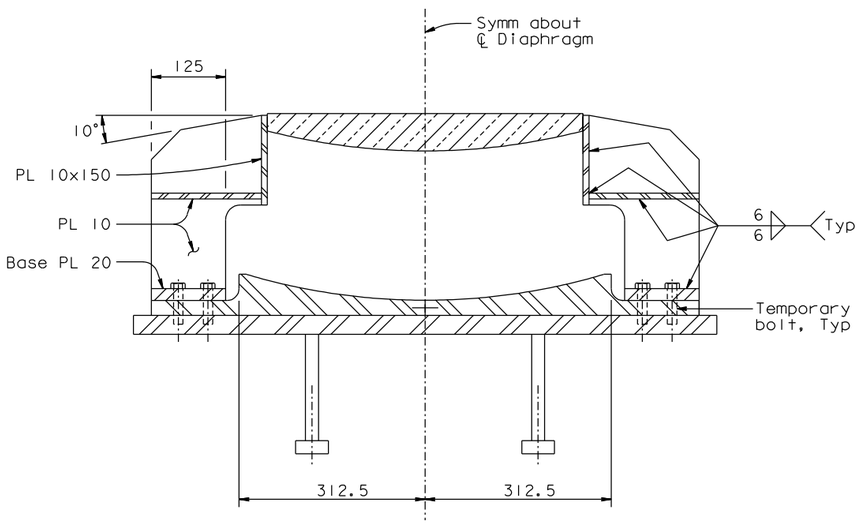

SECTION B-B
1:5

NOTES:

1. Drill hole after plates are joined together.
2. Top restrainer brackets may be removed after bearing installation on the hinge pipe beam and must be removed prior to the diaphragm concrete pour.

CONTRACT CHANGE ORDER NO. _____
SHEET ____ OF ____

REQUESTS FOR INFORMATION NOT ADDRESSED IN THIS CCO REMAIN IN FORCE

ALL DIMENSIONS ARE IN MILLIMETERS UNLESS OTHERWISE SHOWN

R. Valizadeh/V. Toan/Y.L./W.L./F.C.
DESIGN OVERSIGHT
Roya Valizadeh / Vong Toan / Y. Liu
SIGN OFF DATE 01/13/12

MARK	DATE	DESCRIPTIONS	BY	CH'D	CCO#
0	01/13/12	HINGE K MODIFICATIONS	NV	MN	153

REVISIONS

	BY	CHECKED
DESIGN	N. Vo	M. Nader
DETAILS	N. Vo	M. Nader
QUANTITIES	N. Vo	M. Nader

PREPARED FOR THE STATE OF CALIFORNIA DEPARTMENT OF TRANSPORTATION

R. Manzanarez
PROJECT ENGINEER

BRIDGE NO. 34-0006L/R
KILOMETER POST 13.2/13.9

SAN FRANCISCO OAKLAND BAY BRIDGE
EAST SPAN SEISMIC SAFETY PROJECT
SELF-ANCHORED SUSPENSION BRIDGE
(SUPERSTRUCTURE & TOWER)

HINGE K BEARING DETAILS NO. 5

Rev. Date: 5-18-98

ORIGINAL SCALE IN MILLIMETERS FOR REDUCED PLANS 0 10 20 30 40 50 60 70 80 90 100

CU 04
EA 0120F1

DISREGARD PRINTS BEARING EARLIER REVISION DATES

REVISION DATES (PRELIMINARY STAGE ONLY): 01/13/12

SHEET 431S2 OF

FILE => I:\bb\04-012001\sas\contract plans and cco\cco\cco#153\2-revision 01-13-12\dgn\ahhng08kb.dgn

100 % PS&E

USERNAME => DWinrow DATE PLOTTED => 12 JAN 2012 TIME PLOTTED => 14:30:22