DIST	COUNTY	ROUTE	KILOMETER POST TOTAL PROJECT	SHEET No	TOTAL SHEETS
04	SF	80	13.2/13.9	75S2 R1	1204

REGISTERED CIVIL ENGINEER 11/26/12

12-04-12
PLANS APPROVAL DATE

REGISTERED PROFESSIONAL ENGINEER LAWRENCE M. JOHNSON No. C 44006 Exp. 6-30-13 CIVIL STATE OF CALIFORNIA

The State of California or its officers or agents shall not be responsible for the accuracy or completeness of electronic copies of this plan sheet.

Parsons Brinckerhoff Quade & Douglas, Inc.
303 Second Street, Suite 700N
San Francisco, CA 94107

Caltrans now has a web site! To get to the web site, go to: http://www.dot.ca.gov

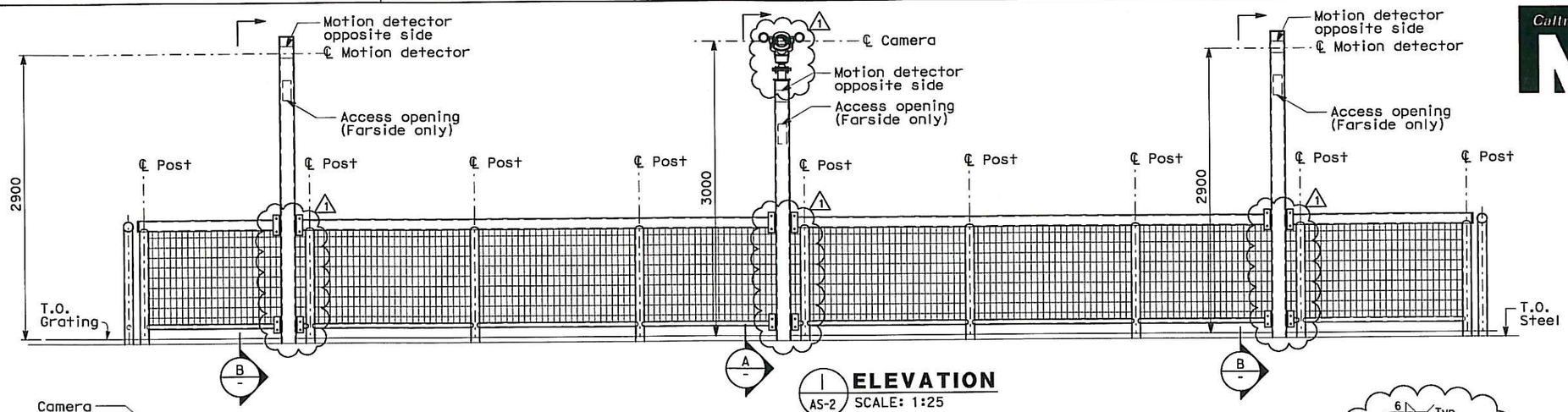

1 ELEVATION
AS-2 SCALE: 1:25

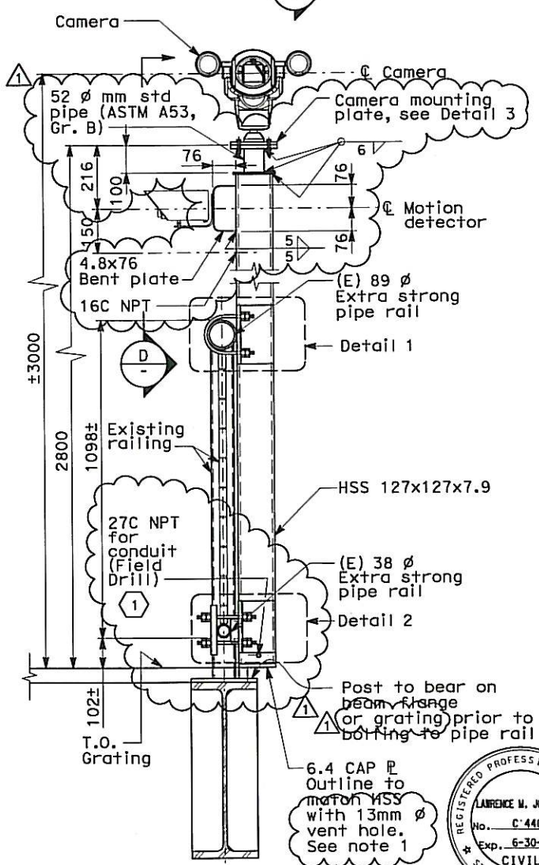

AT CAMERA

A SECTION
SCALE: 1:10

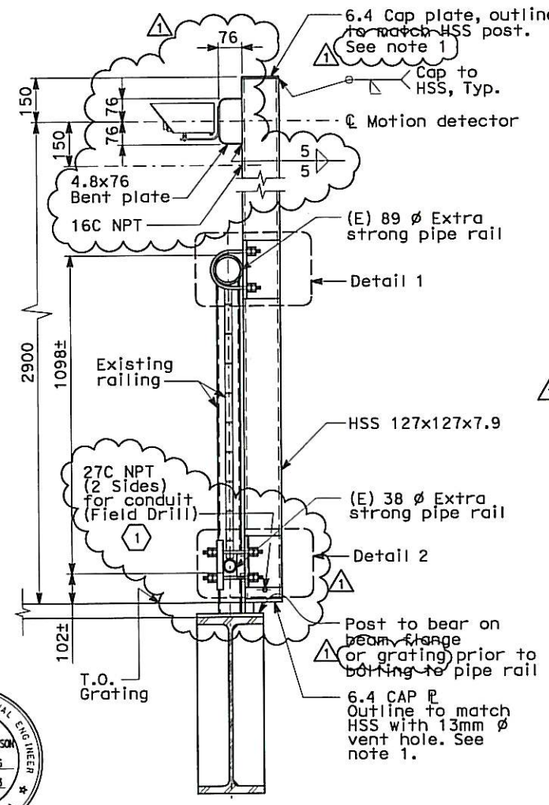

AT MOTION DETECTOR

B SECTION
SCALE: 1:10

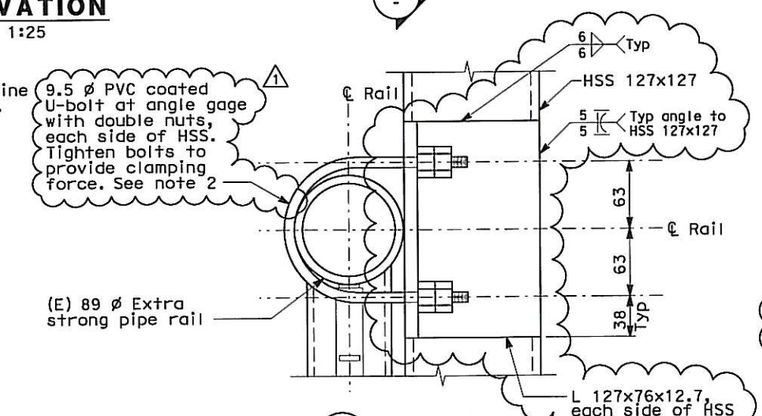

1 DETAIL
NOT TO SCALE

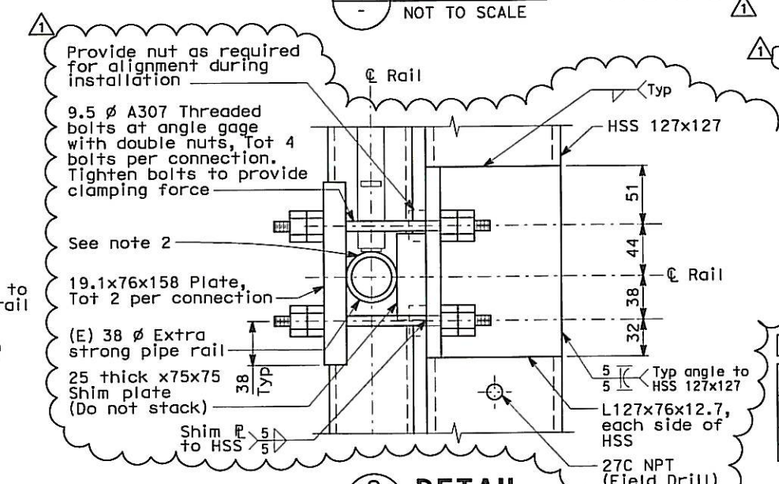

2 DETAIL
NOT TO SCALE

SHEET NOTES:

1. ~~See Ev3917 for conduit location.~~ Locate conduit opening on HSS to suit field condition.

NOTES:

1. All steel items shall be hot dipped galvanized and painted to match existing guardrail. Cap plates to be welded after galvanizing. Repair galvanization per specifications.
2. Contractor shall paint all surfaces in contact with the handrail using PVC coating. Any paint damage on the handrail during installation shall be repaired per project specifications.

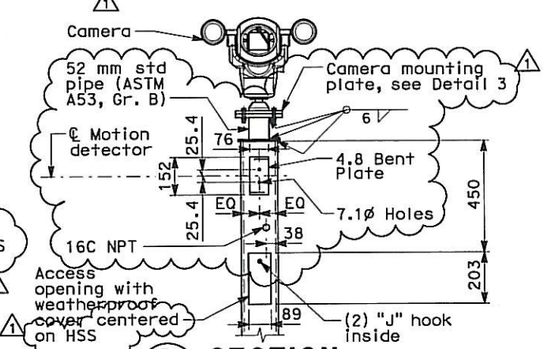

D SECTION
NOT TO SCALE

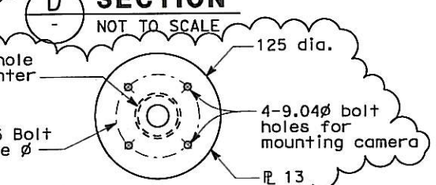

3 DETAIL
NOT TO SCALE

REQUEST FOR INFORMATION NOT ADDRESSED IN THIS CCO REMAIN IN FORCE

MARK	DATE	DESCRIPTIONS	BY	CH'D	CCO#
1	05/30/13	Install Base CCTV System	RG	LJ	150S1
0	12/04/12	Install Base CCTV System	RG	LJ	150S1

REVISIONS

CONTRACT CHANGE ORDER NO. 150 S1
SHEET 9 OF 86

ALL DIMENSIONS ARE IN MILLIMETERS UNLESS OTHERWISE SHOWN

FOR REVISION ONLY

DESIGN	BY L. Johnson	CHECKED R. Garcia	
LAYOUT	BY E. Liorico	CHECKED R. Garcia	
QUANTITIES	BY	CHECKED	

PREPARED FOR THE STATE OF CALIFORNIA DEPARTMENT OF TRANSPORTATION

Brady Nadell
PROJECT ENGINEER

BRIDGE NO. 34-0006
KILOMETER POST 13.2/13.9

SAS SUPERSTRUCTURE
SERVICE PLATFORM DETAILS
AS-5B

CU 04251
EA 0120F1

DISREGARD PRINTS BEARING EARLIER REVISION DATES

REVISION DATES (PRELIMINARY STAGE ONLY) SHEET OF

DGN FILE => 04-0120f1_0075S02r01.dgn
USERNAME => Liorico

DESIGN DETAIL SHEET (METRIC) (REV. 3/1/98)

ORIGINAL SCALE IN MILLIMETERS FOR REDUCED PLANS 0 10 20 30 40 50 60 70 80 90 100

T:\13103\MS\pse\SAS Struc\CCO\SAS CCO150S1\Final Submittal Draft 5 05-30-2013\04-0120f1_0075S02r01.dgn

DATE PLOTTED => 30-MAY-2013 TIME PLOTTED => 09:30

DIST	COUNTY	ROUTE	KILOMETER POST TOTAL PROJECT	SHEET No	TOTAL SHEETS
04	SF	80	13.2/13.9	86S34 R1	1204

REGISTERED CIVIL ENGINEER 11/26/12

11-29-12
PLANS APPROVAL DATE

REGISTERED PROFESSIONAL ENGINEER LAWRENCE W. JOHNSON No. C 44006 Exp. 6-30-13 CIVIL STATE OF CALIFORNIA

The State of California or its officers or agents shall not be responsible for the accuracy or completeness of electronic copies of this plan sheet.

Parsons Brinckerhoff Quade & Douglas, Inc.
303 Second Street, Suite 700N
San Francisco, CA 94107

Caltrans now has a web site! To get to the web site, go to: http://www.dot.ca.gov

Caltrans Metric

REQUEST FOR INFORMATION NOT ADDRESSED IN THIS CCO REMAIN IN FORCE

MARK	DATE	DESCRIPTIONS	BY	CH'D	CCO#
1	05/30/13	Install Base CCTV System	LJ	RG	150S1
0	12/04/12	Install Base CCTV System	LJ	RG	150S1

REVISIONS

CONTRACT CHANGE ORDER NO. 150 S1
SHEET 10 OF 86

REGISTERED PROFESSIONAL ENGINEER LAWRENCE W. JOHNSON No. C 44006 Exp. 6-30-13 CIVIL STATE OF CALIFORNIA

FOR REVISION ONLY

SHEET NOTE:
(1) Contractor shall maintain the brace slope as close to 45° as possible and between 35° and 55° based on field conditions.

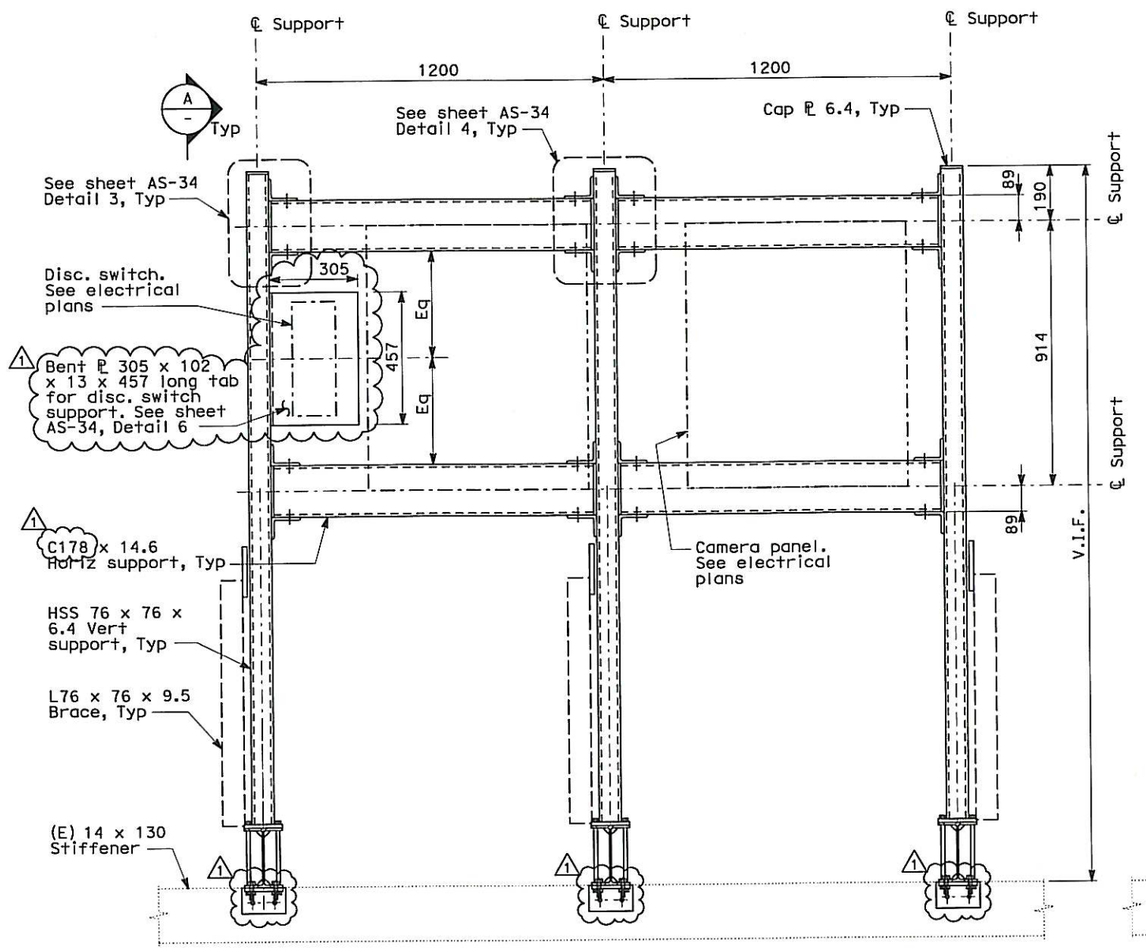

ELEVATION
Scale: 1:10

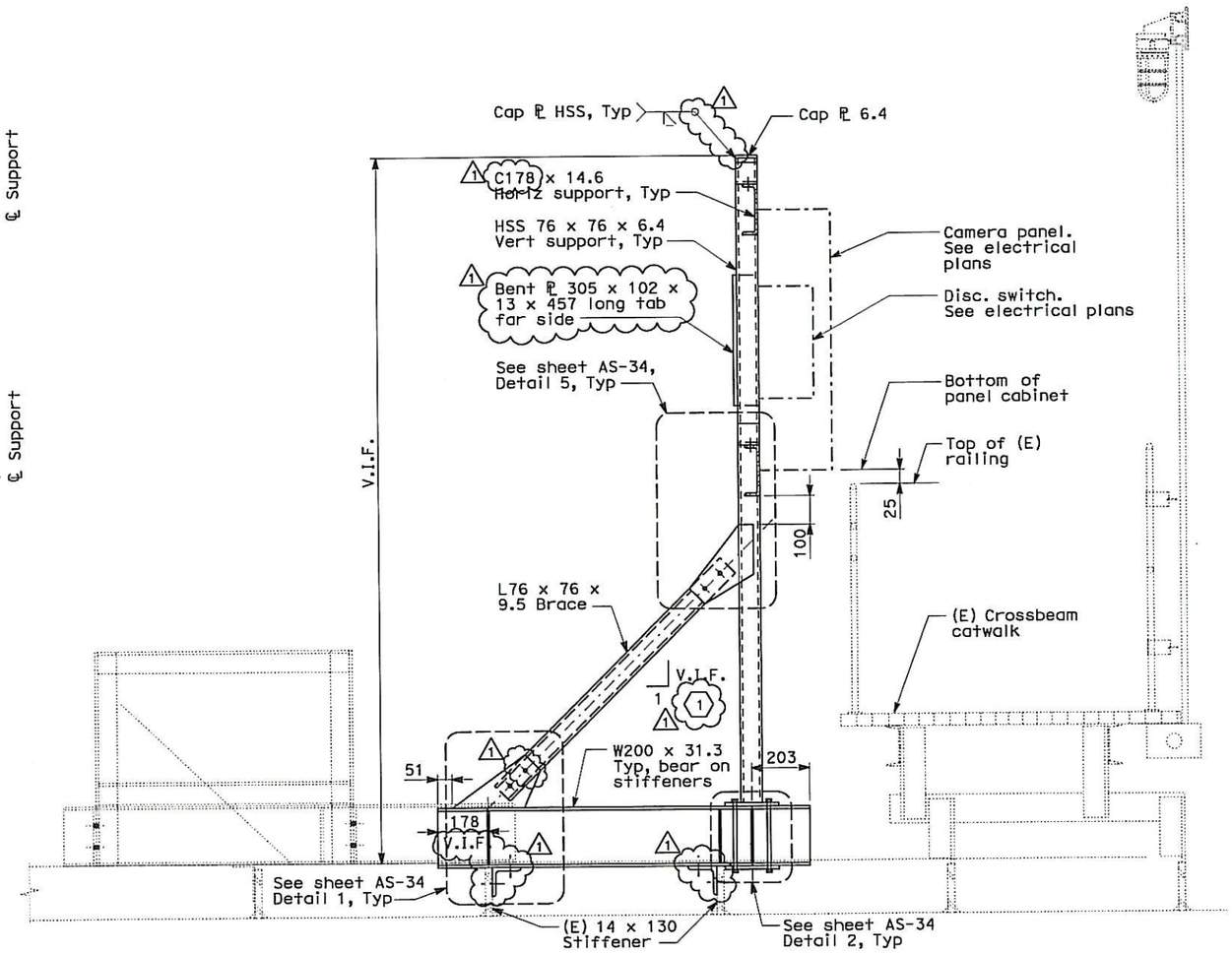

SECTION A-A
Scale: 1:10

ALL DIMENSIONS ARE IN MILLIMETERS UNLESS OTHERWISE SHOWN

	BY	CHECKED
DESIGN	L. Johnson	R. Garcia
LAYOUT	J. Fusco	R. Garcia
QUANTITIES		

PREPARED FOR THE STATE OF CALIFORNIA DEPARTMENT OF TRANSPORTATION

Brady Nadell
PROJECT ENGINEER

BRIDGE NO. 34-0006
KILOMETER POST 13.2/13.9

SAS SUPERSTRUCTURE
BASE EQUIPMENT SUPPORT DETAIL
AS-32

SHEET OF

REVISION DATES (PRELIMINARY STAGE ONLY)

DISREGARD PRINTS BEARING EARLIER REVISION DATES

CU 04251
EA 0120F1

DGN FILE => 04-0120f1_0086S34r01.dgn
USERNAME => Llorico

ORIGINAL SCALE IN MILLIMETERS FOR REDUCED PLANS 0 10 20 30 40 50 60 70 80 90 100

DESIGN DETAIL SHEET (METRIC) (REV. 3/1/98)

T:\13103\WS\pse\SAS Struc\CCO\SAS CCO150S1\Final Submittal Draft 5 05-30-2013\04-0120f1_0086S34r01.dgn

DATE PLOTTED => 29-MAY-2013 TIME PLOTTED => 15:06

DIST	COUNTY	ROUTE	KILOMETER POST TOTAL PROJECT	SHEET No	TOTAL SHEETS
04	SF	80	13.2/13.9	86S35 R1	1204

REGISTERED CIVIL ENGINEER 11/26/12

11-29-12
PLANS APPROVAL DATE

REGISTERED PROFESSIONAL ENGINEER LAURENCE M. JOHNSON No. C 44006 Exp. 6-30-13 CIVIL STATE OF CALIFORNIA

The State of California or its officers or agents shall not be responsible for the accuracy or completeness of electronic copies of this plan sheet.

Parsons Brinckerhoff Quade & Douglas, Inc.
303 Second Street, Suite 700N
San Francisco, CA 94107

Caltrans now has a web site! To get to the web site, go to: http://www.dot.ca.gov

SHEET NOTE:

1. Contractor shall maintain the brace slope as close to 45° as possible and between 35° and 55° based on field conditions.

REGISTERED PROFESSIONAL ENGINEER LAURENCE M. JOHNSON No. C 44006 Exp. 6-30-13 CIVIL STATE OF CALIFORNIA

FOR REVISION ONLY

REQUEST FOR INFORMATION NOT ADDRESSED IN THIS CCO REMAIN IN FORCE					
1	05/30/13	Install Base CCTV System	LJ	RG	150S1
0	12/04/12	Install Base CCTV System	LJ	RG	150S1
MARK	DATE	DESCRIPTIONS	BY	CH'D	CCO#
		REVISIONS			

CONTRACT CHANGE ORDER NO. 150 S1
SHEET 11 OF 86

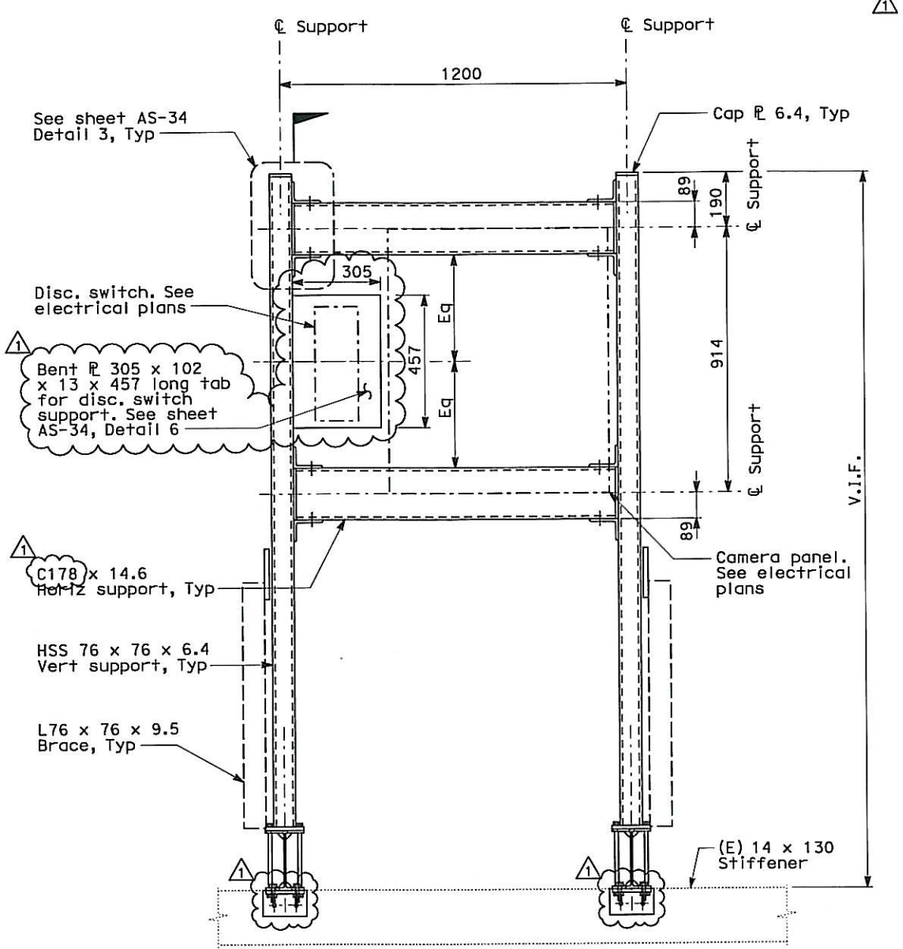

A Typ

ELEVATION
Scale: 1:10

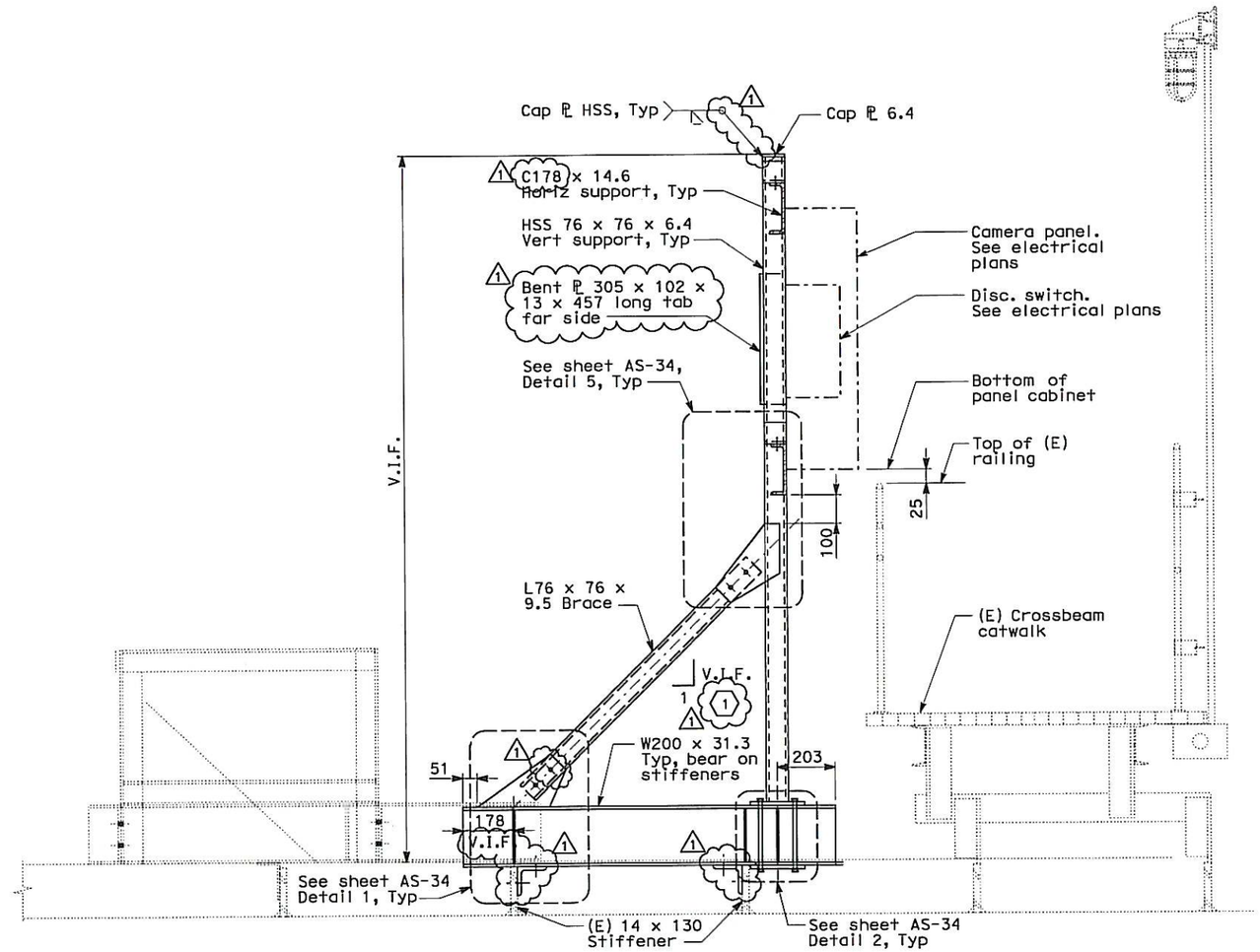

SECTION A-A
Scale: 1:10

ALL DIMENSIONS ARE IN MILLIMETERS UNLESS OTHERWISE SHOWN

DESIGN	BY L. Johnson	CHECKED R. Garcia	
LAYOUT	BY J. Fusco	CHECKED R. Garcia	
QUANTITIES	BY	CHECKED	

PREPARED FOR THE STATE OF CALIFORNIA DEPARTMENT OF TRANSPORTATION

Brady Nadell
PROJECT ENGINEER

BRIDGE NO. 34-0006
KILOMETER POST 13.2/13.9

SAS SUPERSTRUCTURE
BASE EQUIPMENT SUPPORT DETAIL
AS-33

DESIGN DETAIL SHEET (METRIC) (REV. 3/1/98)

ORIGINAL SCALE IN MILLIMETERS FOR REDUCED PLANS 0 10 20 30 40 50 60 70 80 90 100

CU 04251
EA 0120F1

DISREGARD PRINTS BEARING EARLIER REVISION DATES

REVISION DATES (PRELIMINARY STAGE ONLY) SHEET OF

DGN FILE => 04-0120f1_0086S35r01.dgn
USERNAME => Llorico

DATE PLOTTED => 29-MAY-2013 TIME PLOTTED => 15:07

T:\13103\US\pse\SAS Struc\CCO\SAS CCO150S1\Final Submittal Draft 5 05-30-2013\04-0120f1_0086S35r01.dgn

DIST	COUNTY	ROUTE	KILOMETER POST TOTAL PROJECT	SHEET No	TOTAL SHEETS
04	SF	80	13.2/13.9	86S36 R1	1204

REGISTERED CIVIL ENGINEER 11/26/12

11-29-12
PLANS APPROVAL DATE

REGISTERED PROFESSIONAL ENGINEER LAWRENCE M. JOHNSON No. C 44006 Exp. 6-30-13 CIVIL STATE OF CALIFORNIA

The State of California or its officers or agents shall not be responsible for the accuracy or completeness of electronic copies of this plan sheet.

Parsons Brinckerhoff Quade & Douglas, Inc.
303 Second Street, Suite 700N
San Francisco, CA 94107

Caltrans now has a web site! To get to the web site, go to: http://www.dot.ca.gov

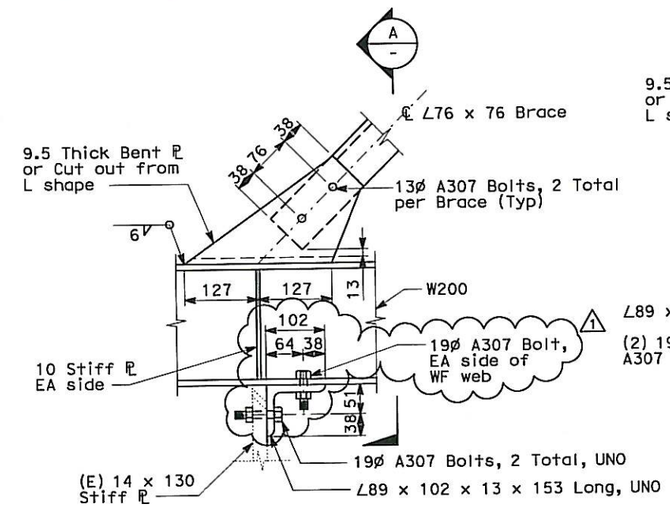

DETAIL 1
Scale: 1:5

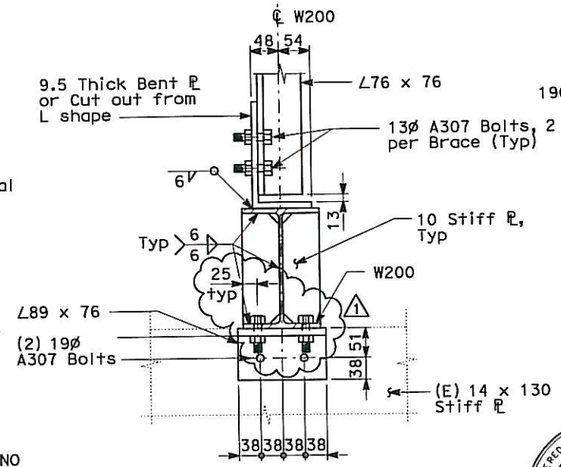

SECTION A
Scale: 1:5

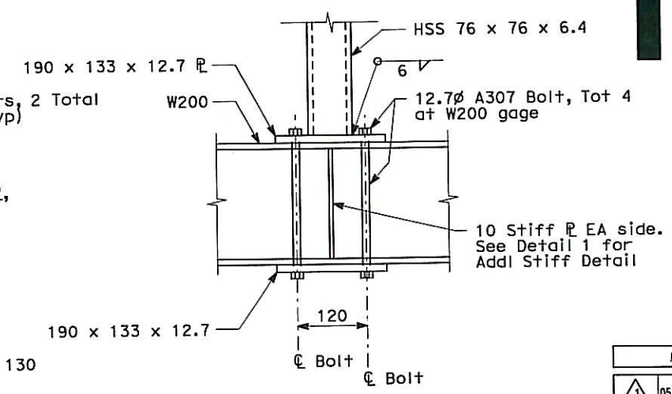

DETAIL 2
Scale: 1:5

FOR REVISION ONLY 1

REQUEST FOR INFORMATION NOT ADDRESSED IN THIS CCO REMAIN IN FORCE					
1	05/30/13	Install Base CCTV System	LJ	RG	150S1
0	12/04/12	Install Base CCTV System	LJ	RG	150S1
MARK	DATE	DESCRIPTIONS	BY	CH'D	CCO#
		REVISIONS			

CONTRACT CHANGE ORDER NO. 150 S1
SHEET 12 OF 86

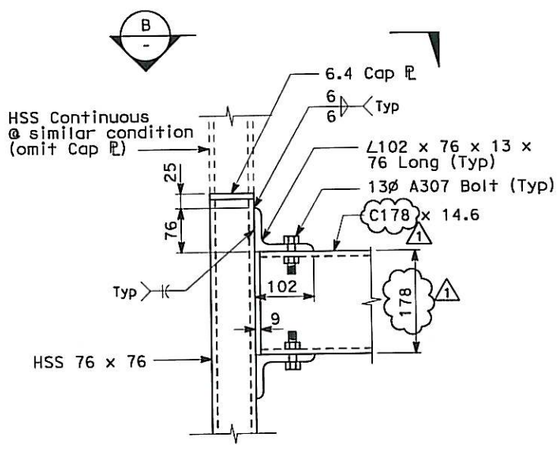

DETAIL 3
Scale: 1:5

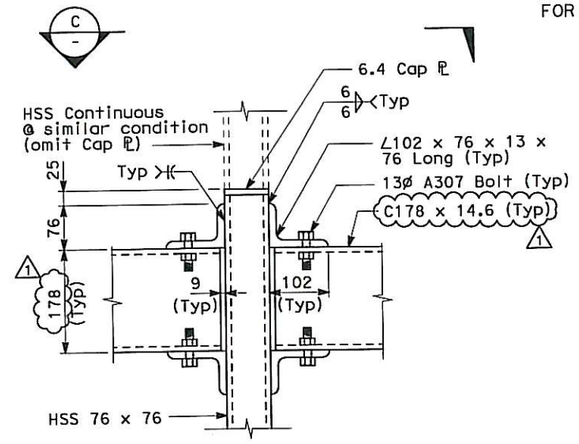

DETAIL 4
Scale: 1:5

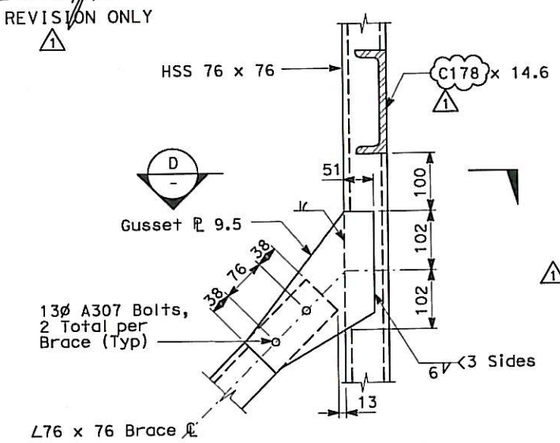

DETAIL 5
Scale: 1:5

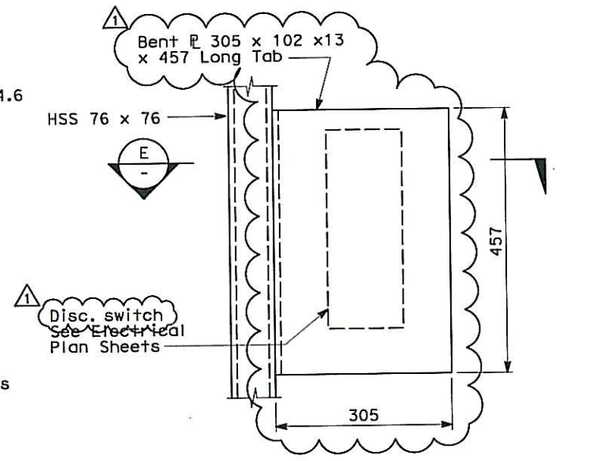

DETAIL 6
Scale: 1:5

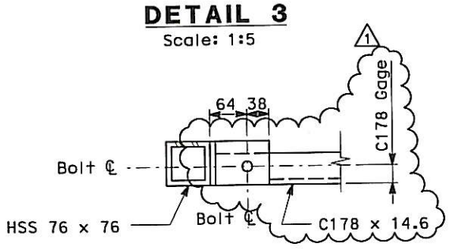

SECTION B
Scale: 1:5

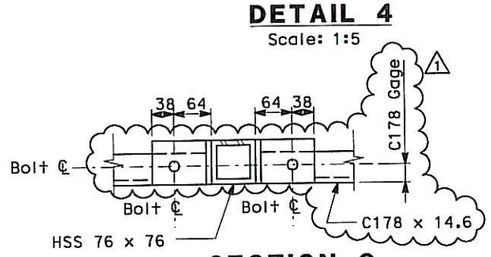

SECTION C
Scale: 1:5

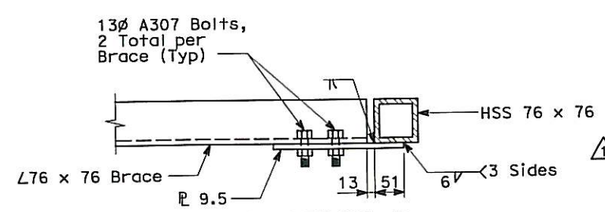

SECTION D
Scale: 1:5

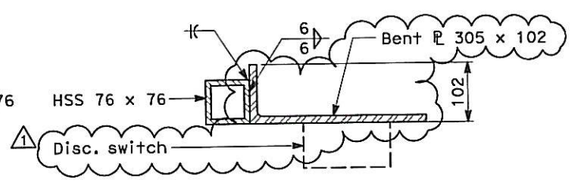

SECTION E
Scale: 1:5

ALL DIMENSIONS ARE IN MILLIMETERS UNLESS OTHERWISE SHOWN

DESIGN	BY L. Johnson	CHECKED R. Garcia	
LAYOUT	BY J. Fusco	CHECKED R. Garcia	
QUANTITIES	BY	CHECKED	

PREPARED FOR THE STATE OF CALIFORNIA DEPARTMENT OF TRANSPORTATION

Brady Nadell
PROJECT ENGINEER

BRIDGE NO. 34-0006
KILOMETER POST 13.2/13.9

SAS SUPERSTRUCTURE
BASE EQUIPMENT SUPPORT DETAIL
AS-34

SHEET OF

DISREGARD PRINTS BEARING EARLIER REVISION DATES
REVISION DATES (PRELIMINARY STAGE ONLY)

CU 04251
EA 0120F1

DGN FILE => 04-0120f1_0086S36r01.dgn
USERNAME => Llorico

DESIGN DETAIL SHEET (METRIC) (REV. 3/1/98)

ORIGINAL SCALE IN MILLIMETERS FOR REDUCED PLANS 0 10 20 30 40 50 60 70 80 90 100

T:\13103\MS\pse\SAS Struc\CCO\SAS CCO150S1\Final Submittal Draft 5 05-30-2013\04-0120f1_0086S36r01.dgn

DATE PLOTTED => 29-MAY-2013 TIME PLOTTED => 15:08

PROJECT NOTES (Continuation)

71 21C, 1-3/C #16, 600 V, EPR insulation

72 21C, 1-7/C #16, 600 V, EPR insulation

73 21C, Flex conduit, 1-7/C #16, 600 V, EPR insulation

74 41C, BASE Hybrid Camera Cable (type HCC-A)

75 41C, BASE Hybrid Camera Cable (type HCC-C)

76 41C, BASE Hybrid Camera Cable (type HCC-C)
1-7/C #16, 600 V, EPR insulation

77 27C, 1-2/C + Gnd, #8, 600 V, EPR insulation

78 27C, 1 BASE 12 Fiber, SMFO, Brown outer covering

79 41C, BASE Hybrid Camera Cable (type HCC-B)

* Existing Raceways (Cable trays, wireways and conduit) being used to route BASE CCTV SYSTEM cables. Applicable for BASE CCTV SYSTEM drawings only.

DIST	COUNTY	ROUTE	KILOMETER POST TOTAL PROJECT	SHEET No	TOTAL SHEETS
04	SF	80	13.2/13.9	93S1	1204

REGISTERED ELECTRICAL ENGINEER 11-26-12 DATE

PLANS APPROVAL DATE 11-29-12

REGISTERED PROFESSIONAL ENGINEER DAVID H. OTO No. 10699 Exp. 06/30/2013 ELECTRICAL STATE OF CALIFORNIA

PB AMERICAS, Inc.
A Parsons Brinckerhoff Company
303 Second St., Suite 700N
San Francisco, CA 94107-1317

The State of California or its officers or agents shall not be responsible for the accuracy or completeness of electronic copies of this plan sheet.

Caltrans now has a web site! To get to the web site, go to http://www.dot.ca.gov

REQUEST FOR INFORMATION NOT ADDRESSED IN THIS CCO REMAIN IN FORCE					
0	12/18/12	Install Base CCTV System	JH	RG	150S1
MARK	DATE	DESCRIPTIONS	BY	CH'D	CCO#
REVISIONS					

CONTRACT CHANGE ORDER NO. 150 S1
SHEET 13 OF 86

ELECTRICAL NOTES AND ABBREVIATIONS

E-8A

CALCULATED/DESIGNED BY	JH	DATE 11/12	REVISED BY
CHECKED BY	RG	11/12	DATE REVISED

DESIGN OVERSIGHT
BEHZAD GOLEMOHAMMADI

STATE OF CALIFORNIA - DEPARTMENT OF TRANSPORTATION
Caltrans

THIS PLAN ACCURATE FOR ELECTRICAL WORK ONLY.

FOR REDUCED PLANS ORIGINAL SCALE IS IN MILLIMETERS 0 20 40 60 80

DGN FILE =>04-0120f1_0093S01.dgn
USERNAME =>Llorico

CU 04251 EA 0120F1

LAST REVISION 00-00-00
DATE PLOTTED => 18-DEC-2012
TIME PLOTTED => 17:24

DIST	COUNTY	ROUTE	KILOMETER POST TOTAL PROJECT	SHEET No	TOTAL SHEETS
04	SF	80	13.2/13.9	94S5	1204

REGISTERED ELECTRICAL ENGINEER 11-26-12 DATE

PLANS APPROVAL DATE 11-29-12

REGISTERED PROFESSIONAL ENGINEER DAVID H. OTO No. 10699 Exp. 06/30/2013 ELECTRICAL STATE OF CALIFORNIA

PB AMERICAS, Inc.
A Parsons Brinckerhoff Company
303 Second St., Suite 700N
San Francisco, CA 94107-1317

The State of California or its officers or agents shall not be responsible for the accuracy or completeness of electronic copies of this plan sheet.

Caltrans now has a web site! To get to the web site, go to http://www.dot.ca.gov

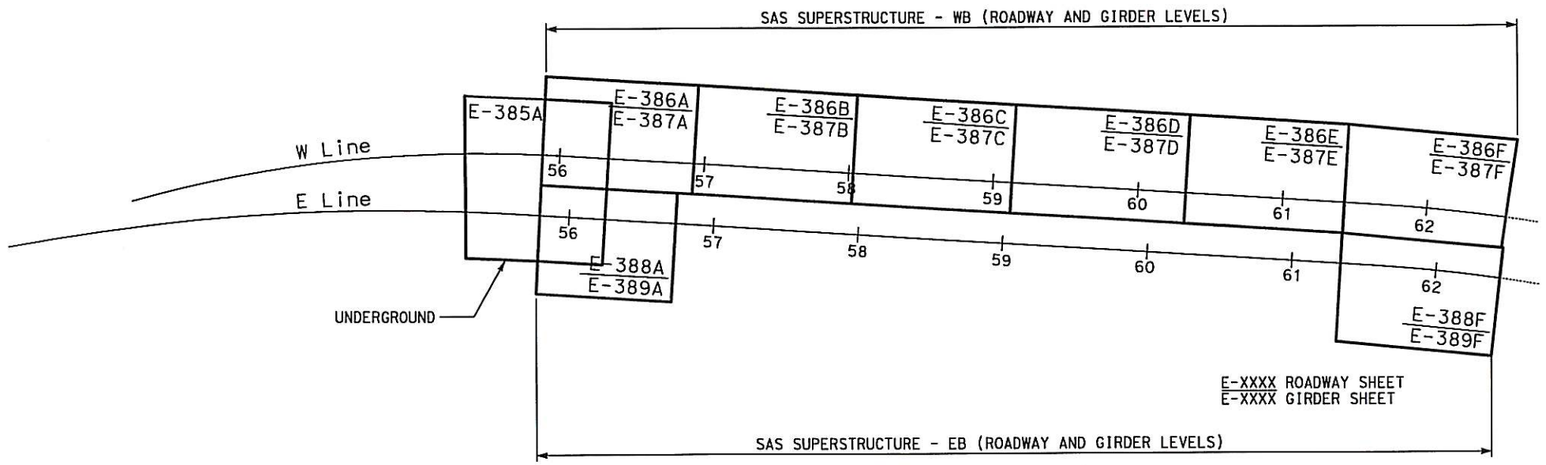

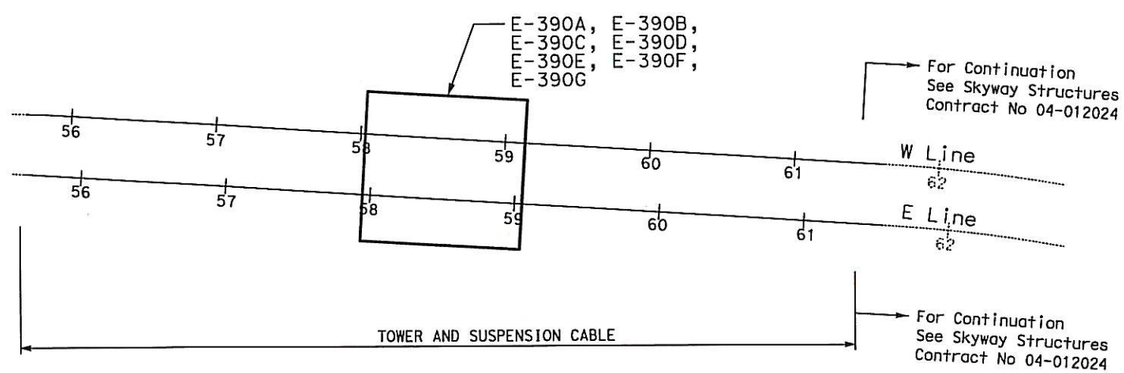

REQUEST FOR INFORMATION NOT ADDRESSED IN THIS CCO REMAIN IN FORCE					
0	12/18/12	Install Base CCTV System	JH	RG	150S1
MARK	DATE	DESCRIPTIONS	BY	CH'D	CCO#
		REVISIONS			

CONTRACT CHANGE ORDER NO. 150 S1
SHEET 14 OF 86

ELECTRICAL KEY MAP (BASE CCTV SYSTEM)

NO SCALE

E-9E

DATE	REVISED BY
11/12	DATE REVISED

CALCULATED/DESIGNED BY	JH	DATE 11/12
CHECKED BY	RG	

DESIGN OVERSIGHT
BEHZAD GOLEMOHAMMADI

STATE OF CALIFORNIA - DEPARTMENT OF TRANSPORTATION
Caltrans

LAST REVISION 00-00-00
DATE PLOTTED => 18-DEC-2012
TIME PLOTTED => 17:24

THIS PLAN ACCURATE FOR ELECTRICAL WORK ONLY.

FOR REDUCED PLANS ORIGINAL SCALE IS IN MILLIMETERS 0 20 40 60 80

DGN FILE =>04-0120f1_0094S05.dgn
USERNAME =>Liorico

CU 04251

EA 0120F1

DIST	COUNTY	ROUTE	KILOMETER POST TOTAL PROJECT	SHEET No	TOTAL SHEETS
04	SF	80	13.2/13.9	350 S01	1204

REGISTERED ELECTRICAL ENGINEER 11-26-12 DATE

PLANS APPROVAL DATE 11-29-12

REGISTERED PROFESSIONAL ENGINEER DAVID H. OTO No. 10699 Exp. 06/30/2013 ELECTRICAL STATE OF CALIFORNIA

PB AMERICAS, Inc.
A Parsons Brinckerhoff Company
303 Second St., Suite 700N
San Francisco, CA 94107-1317

The State of California or its officers or agents shall not be responsible for the accuracy or completeness of electronic copies of this plan sheet.

Caltrans now has a web site! To get to the web site, go to http://www.dot.ca.gov

NOTES:

1. References:
   - For circuit and conduit/cable tray schedules, see sheets starting at E-400 series.
   - For cable block riser diagram, see sheets E-391C thru E-391N.

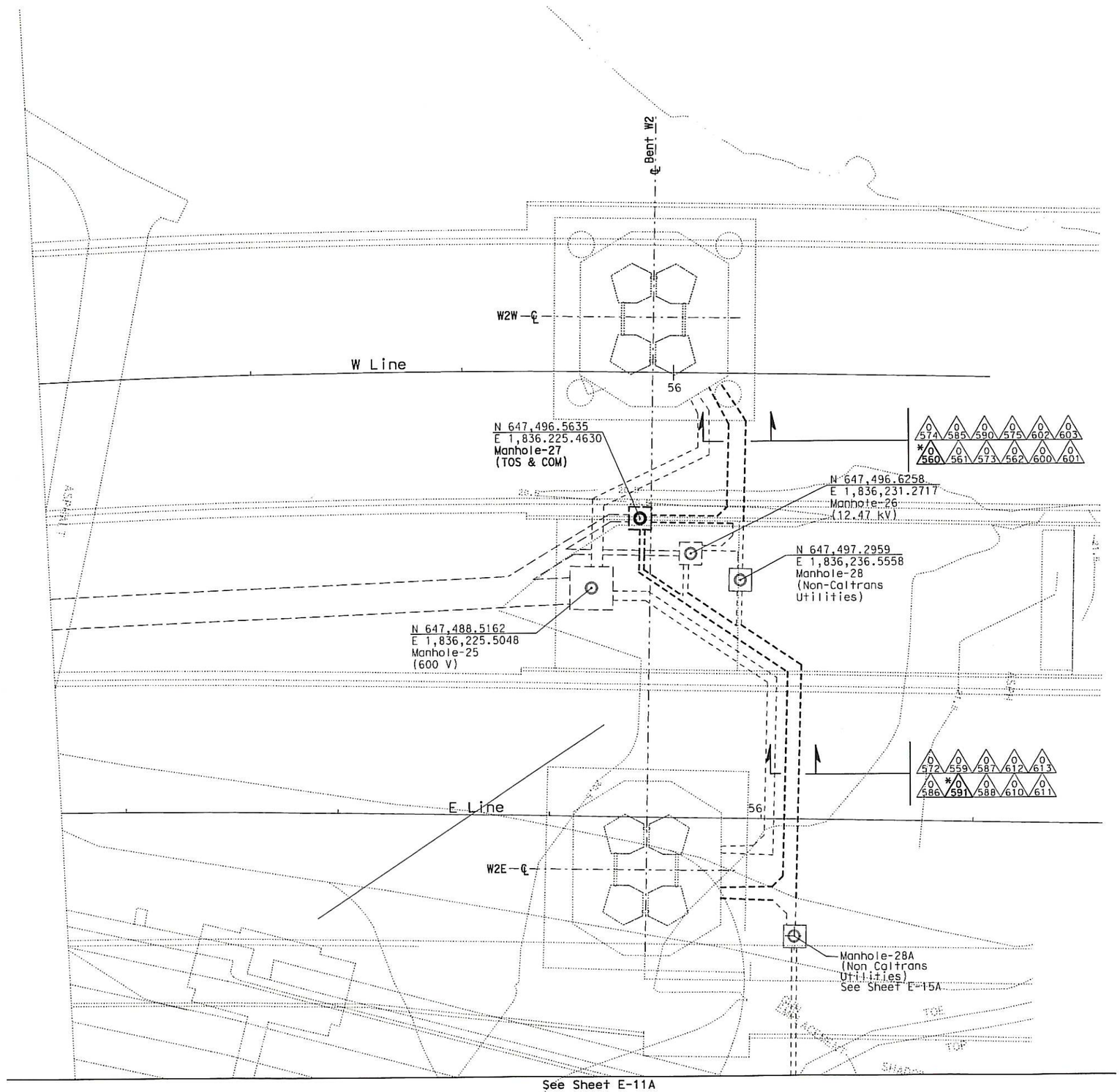

REQUEST FOR INFORMATION NOT ADDRESSED IN THIS CCO REMAIN IN FORCE					
0	12/18/12	Install Base CCTV System	JH	RG	150S1
MARK	DATE	DESCRIPTIONS	BY	CH'D	CCO#
		REVISIONS			

CONTRACT CHANGE ORDER NO. 150 S1
SHEET 15 OF 86

UNDERGROUND
(BASE CCTV SYSTEM)

SCALE 1:200

E-385A

THIS PLAN ACCURATE FOR ELECTRICAL WORK ONLY.

ALL DIMENSIONS ARE IN METERS UNLESS OTHERWISE SHOWN

FOR REDUCED PLANS ORIGINAL SCALE IS IN MILLIMETERS 0 20 40 60 80

DGN FILE =>04-0120f1_0350S01.dgn
USERNAME =>Llorico

CU 04251

EA 0120F1

STATE OF CALIFORNIA - DEPARTMENT OF TRANSPORTATION

DESIGN OVERSIGHT: BEHZAD GOLEMOHAMMADI

CALCULATED/DESIGNED BY: JH DATE 11/12 REVISED BY
CHECKED BY: RG 11/12 DATE REVISED

LAST REVISION 00-00-00 DATE PLOTTED => 18-DEC-2012 TIME PLOTTED => 17:24

DIST	COUNTY	ROUTE	KILOMETER POST TOTAL PROJECT	SHEET No	TOTAL SHEETS
04	SF	80	13.2/13.9	350 S02	1204

REGISTERED ELECTRICAL ENGINEER 11/26/12 DATE

PLANS APPROVAL DATE 11-29-12

REGISTERED PROFESSIONAL ENGINEER DAVID H. OTO No. 10699 Exp. 06/30/2013 ELECTRICAL STATE OF CALIFORNIA

PB AMERICAS, Inc.
A Parsons Brinckerhoff Company
303 Second St., Suite 700N
San Francisco, CA 94107-1317

The State of California or its officers or agents shall not be responsible for the accuracy or completeness of electronic copies of this plan sheet.

Caltrans now has a web site! To get to the web site, go to http://www.dot.ca.gov

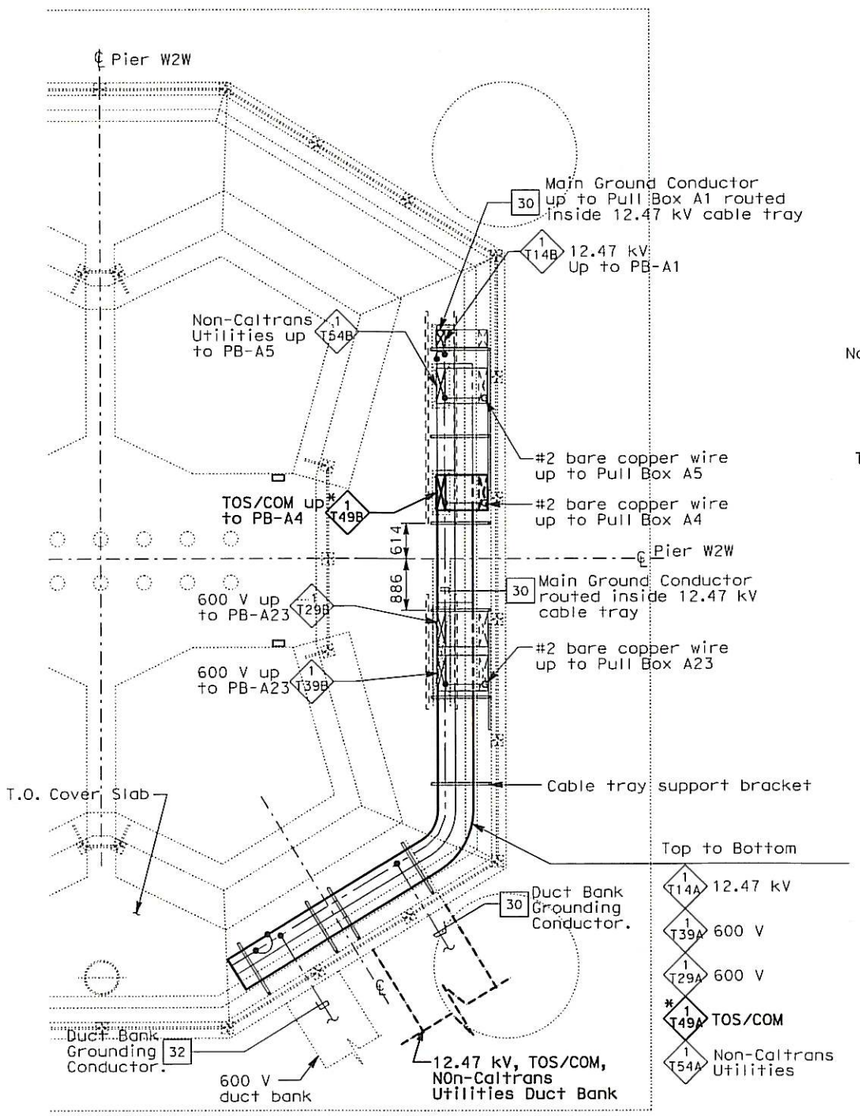

PLAN AT BELOW COVER PIER W2W

SCALE: 1:50

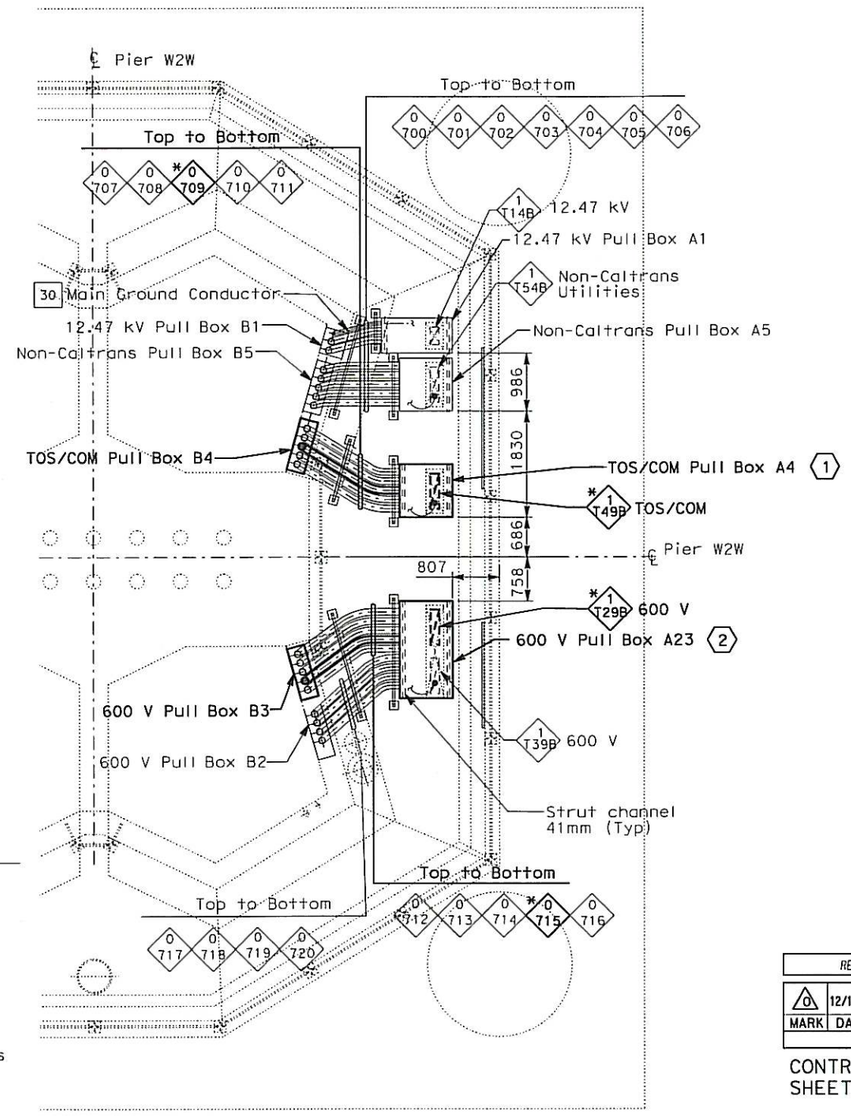

PLAN AT GRADE PIER W2W

SCALE: 1:50

SHEET NOTES:

(1) Coil 10 m of ckt #2480-500 and 1480-515 inside TOS/COM Pull Box A4.

(2) Coil 2 m of ckt #UP204-2, UP204-4 and UP204-6 inside 600 v Pull Box A23.

NOTES:

1. References:
   - For circuit and conduit/cable tray schedules, see sheets starting at E-400 series.
   - For cable block riser diagram, see sheets E-391C thru E-391N.

REQUEST FOR INFORMATION NOT ADDRESSED IN THIS CCO REMAIN IN FORCE

MARK	DATE	DESCRIPTIONS	BY	CH'D	CCO#
0	12/18/12	Install Base CCTV System	JH	RG	150S1

REVISIONS

CONTRACT CHANGE ORDER NO. 150 S1
SHEET 16 OF 86

DETAILS
UNDERGROUND
PIER W2W PLANS AND SECTIONS (BASE CCTV SYSTEM)

SCALE AS NOTED

E-385B

MARK	DATE	REVISED BY	DATE REVISED

CALCULATED/DESIGNED BY JH DATE 11/12
CHECKED BY RG 11/12

DESIGN OVERSIGHT
BEHZAD GOLEMOHAMMADI

STATE OF CALIFORNIA - DEPARTMENT OF TRANSPORTATION
Caltrans

THIS PLAN ACCURATE FOR ELECTRICAL WORK ONLY.

ALL DIMENSIONS ARE IN MILLIMETERS UNLESS OTHERWISE SHOWN

FOR REDUCED PLANS ORIGINAL SCALE IS IN MILLIMETERS 0 20 40 60 80

DGN FILE =>04-0120f1_0350S02.dgn
USERNAME =>Llorico

CU 04251 EA 0120F1

LAST REVISION 00-00-00
DATE PLOTTED => 18-DEC-2012
TIME PLOTTED => 17:24

DIST	COUNTY	ROUTE	KILOMETER POST TOTAL PROJECT	SHEET No	TOTAL SHEETS
04	SF	80	13.2/13.9	350 S03	1204

REGISTERED ELECTRICAL ENGINEER 11/26/12 DATE

PLANS APPROVAL DATE 11-29-12

REGISTERED PROFESSIONAL ENGINEER DAVID H. OTO No. 10699 Exp. 06/30/2013 ELECTRICAL STATE OF CALIFORNIA

PB AMERICAS, Inc.
A Parsons Brinckerhoff Company
303 Second St., Suite 700N
San Francisco, CA 94107-1317

The State of California or its officers or agents shall not be responsible for the accuracy or completeness of electronic copies of this plan sheet.

Caltrans now has a web site! To get to the web site, go to http://www.dot.ca.gov

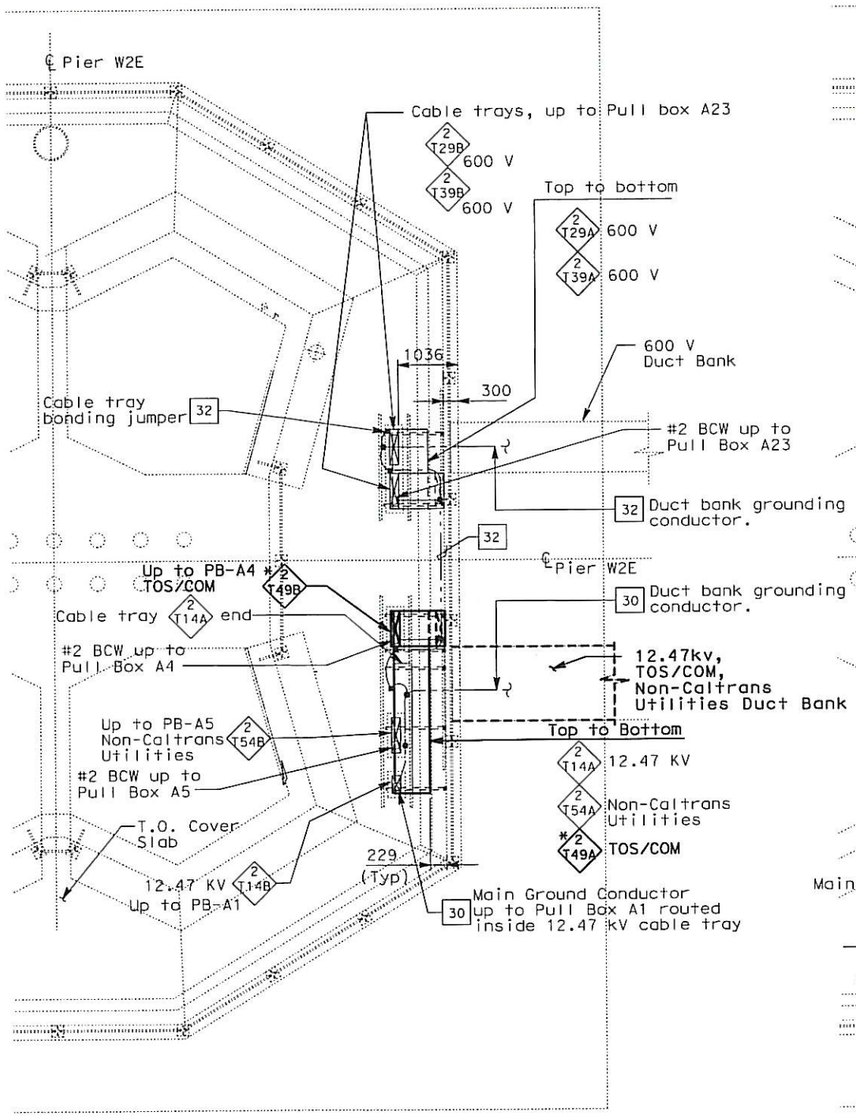

PLAN AT BELOW COVER PIER W2E

SCALE: 1:50

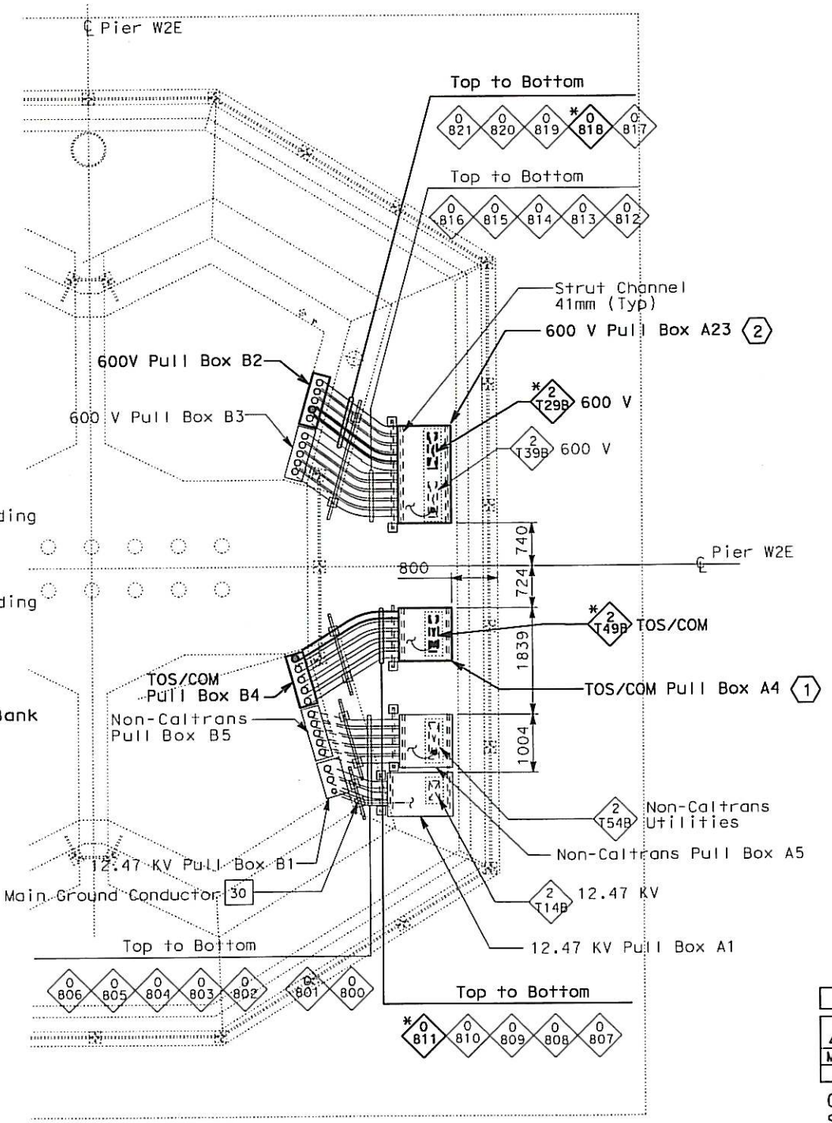

PLAN AT GRADE PIER W2E

SCALE: 1:50

SHEET NOTES:

1. Coil 10 m of ckt #2480-500 inside TOS/COM Pull Box A4.
2. Coil 2 m of ckt #UP204-11 inside 600 v Pull Box A23.

NOTES:

1. References:
   - For circuit and conduit/cable tray schedules, see sheets starting at E-400 series.
   - For cable block riser diagram, see sheets E-391C thru E-391N.

REQUEST FOR INFORMATION NOT ADDRESSED IN THIS CCO REMAIN IN FORCE					
0	12/18/12	Install Base CCTV System	JH	RG	150S1
MARK	DATE	DESCRIPTIONS	BY	CH'D	CCO#
		REVISIONS			

CONTRACT CHANGE ORDER NO. 150 S1
SHEET 17 OF 86

DETAILS
UNDERGROUND
PIER W2E PLANS AND SECTIONS (BASE CCTV SYSTEM)

SCALE AS NOTED

E-385C

DESIGN OVERSIGHT	CALCULATED/DESIGNED BY	JH	DATE 11/12	REVISED BY
BEHZAD GOLEMOHAMMADI	CHECKED BY	RG	11/12	DATE REVISED

STATE OF CALIFORNIA - DEPARTMENT OF TRANSPORTATION

THIS PLAN ACCURATE FOR ELECTRICAL WORK ONLY.

ALL DIMENSIONS ARE IN MILLIMETERS UNLESS OTHERWISE SHOWN

FOR REDUCED PLANS ORIGINAL SCALE IS IN MILLIMETERS 0 20 40 60 80

DGN FILE =>04-0120f1_0350S03.dgn
USERNAME =>Llorico

CU 04251 | EA 0120F1

LAST REVISION 00-00-00 | DATE PLOTTED => 18-DEC-2012 | TIME PLOTTED => 17:24

DIST	COUNTY	ROUTE	KILOMETER POST TOTAL PROJECT	SHEET No.	TOTAL SHEETS
04	SF	80	13.2/13.9	350 S04	1204

REGISTERED ELECTRICAL ENGINEER 11/26/12 DATE

PLANS APPROVAL DATE 11-29-12

REGISTERED PROFESSIONAL ENGINEER DAVID H. OTO No. 10699 Exp. 06/30/2013 ELECTRICAL STATE OF CALIFORNIA

PB AMERICAS, Inc.
A Parsons Brinckerhoff Company
303 Second St., Suite 700N
San Francisco, CA 94107-1317

The State of California or its officers or agents shall not be responsible for the accuracy or completeness of electronic copies of this plan sheet.

Caltrans now has a web site! To get to the web site, go to http://www.dot.ca.gov

Caltrans Metric

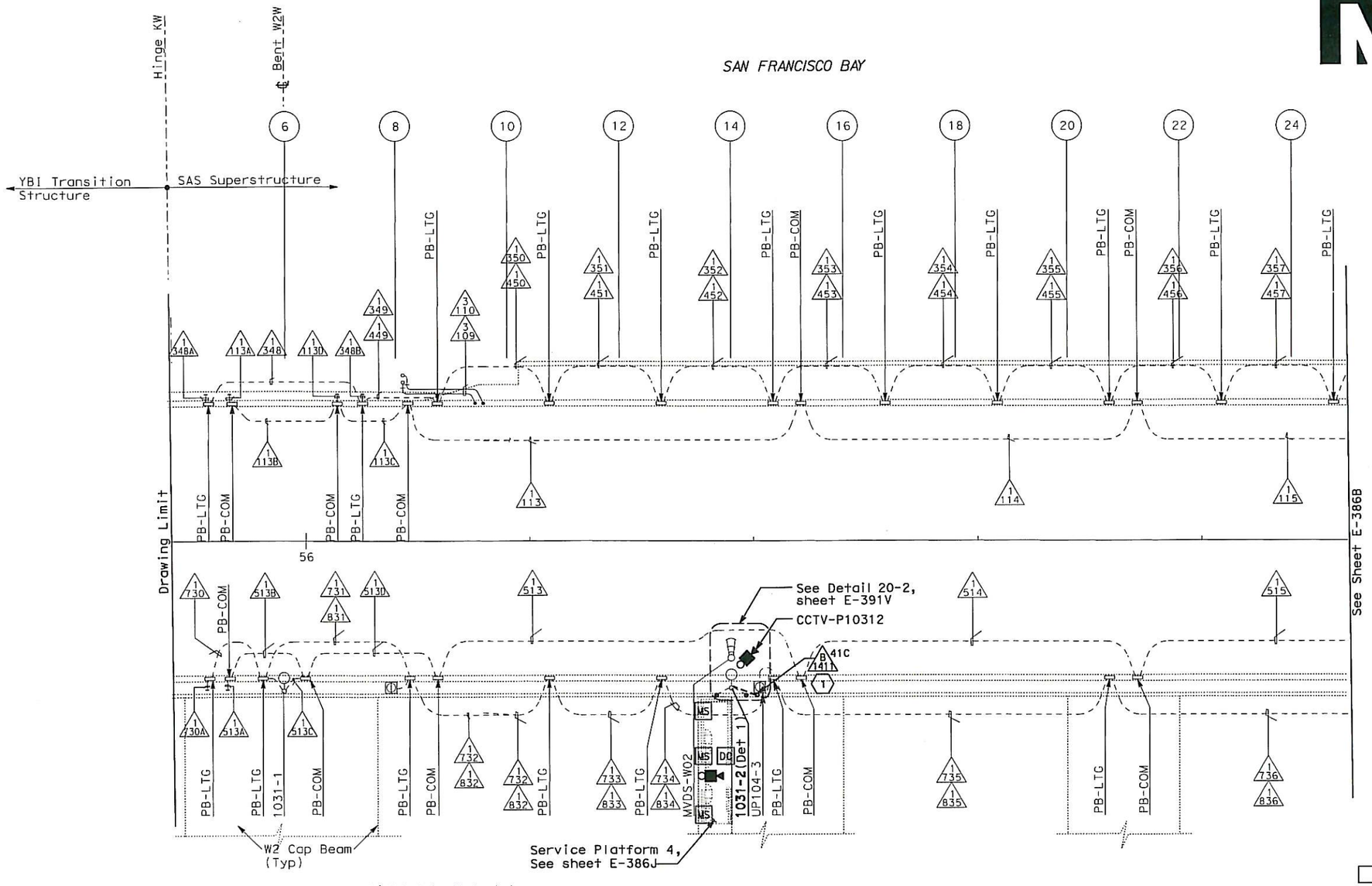

CONDUIT PLAN

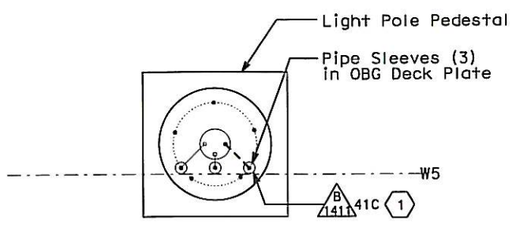

DETAIL 1

SHEET NOTES:

(1) For continuation, see sheet E-387A.

NOTES:

1. Reference:
   - For circuit and conduit/cable tray schedules, see sheets starting at E-400 series.
   - For cable block riser diagram, see sheets E-391C thru E-391N.
   - For typical details and locations of conduit connections to light poles, see sheet E-386H.

REQUEST FOR INFORMATION NOT ADDRESSED IN THIS CCO REMAIN IN FORCE

MARK	DATE	DESCRIPTIONS	BY	CH'D	CCO#
0	12/18/12	Install Base CCTV System	RSB JH	RG	150S1

REVISIONS

CONTRACT CHANGE ORDER NO. 150 S1
SHEET 18 OF 86

SAS SUPERSTRUCTURE ROADWAY WESTBOUND
(BASE CCTV SYSTEM)

SCALE: 1:200

E-386A

DATE	BY	REVISED BY	DATE REVISED
11/12	JH	RG	11/12

CALCULATED/DESIGNED BY JH
CHECKED BY RG

DESIGN OVERSIGHT
BEHZAD GOLEMOHAMMADI

STATE OF CALIFORNIA - DEPARTMENT OF TRANSPORTATION
Caltrans

LAST REVISION 00-00-00
DATE PLOTTED => 18-DEC-2012
TIME PLOTTED => 17:24

THIS PLAN ACCURATE FOR ELECTRICAL WORK ONLY.

ALL DIMENSIONS ARE IN METERS UNLESS OTHERWISE SHOWN

FOR REDUCED PLANS ORIGINAL SCALE IS IN MILLIMETERS 0 20 40 60 80

DGN FILE =>04-0120f1_0350S04.dgn
USERNAME =>Liorico

CU 04251

EA 0120F1

DIST	COUNTY	ROUTE	KILOMETER POST TOTAL PROJECT	SHEET No	TOTAL SHEETS
04	SF	80	13.2/13.9	350 S05	1204

REGISTERED ELECTRICAL ENGINEER 11/26/12 DATE

PLANS APPROVAL DATE 11-29-12

REGISTERED PROFESSIONAL ENGINEER DAVID H. OTO No. 10699 Exp. 06/30/2013 ELECTRICAL STATE OF CALIFORNIA

PB AMERICAS, Inc.
A Parsons Brinckerhoff Company
303 Second St., Suite 700N
San Francisco, CA 94107-1317

The State of California or its officers or agents shall not be responsible for the accuracy or completeness of electronic copies of this plan sheet.

Caltrans now has a web site! To get to the web site, go to http://www.dot.ca.gov

Caltrans Metric

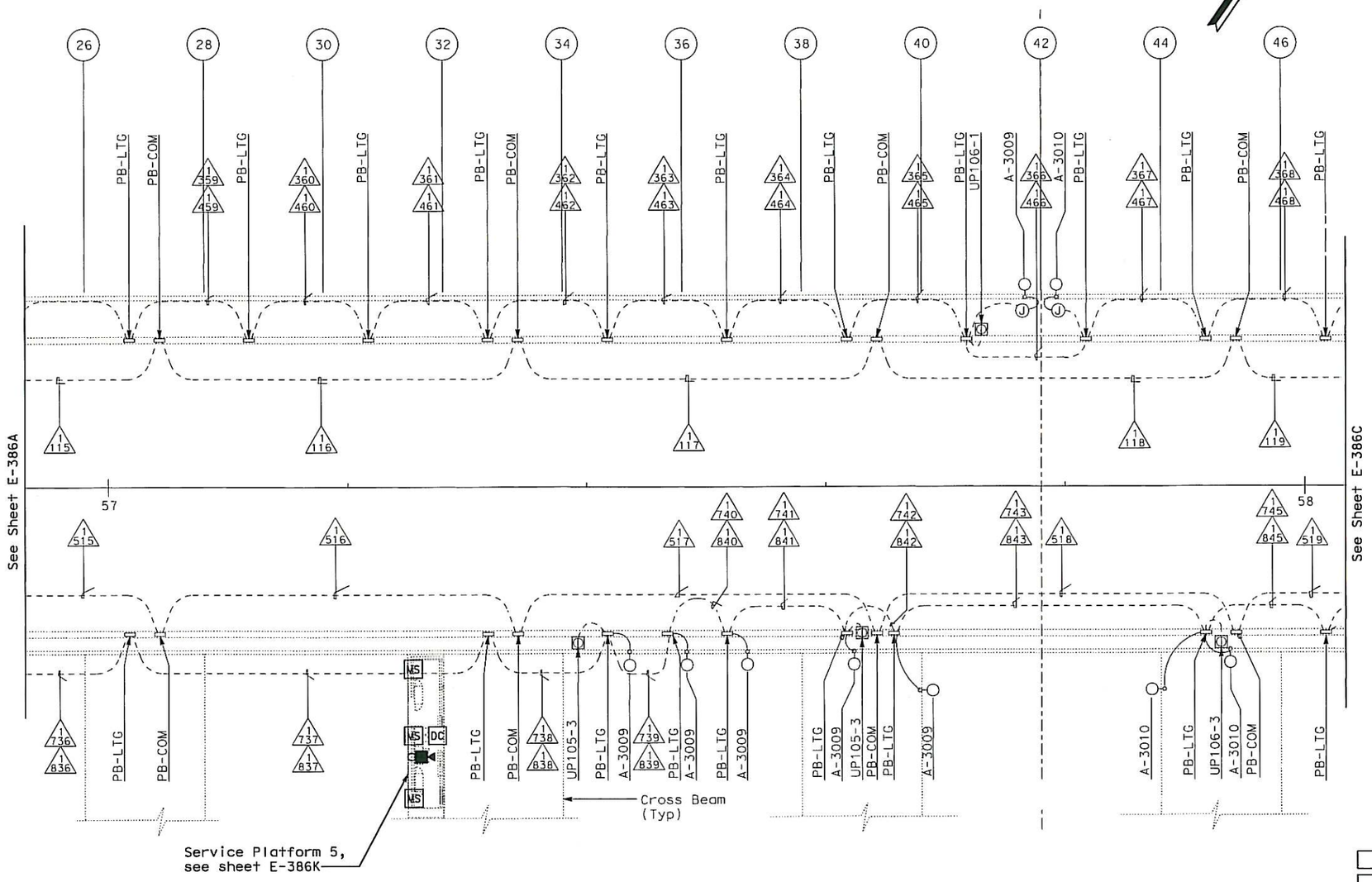

NOTES:

1. Reference:
   - For circuit and conduit/cable tray schedules, see sheets starting at E-400 series.
   - For cable block riser diagram, see sheets E-391C thru E-391N.

REQUEST FOR INFORMATION NOT ADDRESSED IN THIS CCO REMAIN IN FORCE

MARK	DATE	DESCRIPTIONS	BY	CH'D	CCO#
0	12/18/12	Install Base CCTV System	JH	RG	150S1

REVISIONS

CONTRACT CHANGE ORDER NO. 150 S1
SHEET 19 OF 86

SAS SUPERSTRUCTURE ROADWAY WESTBOUND
(BASE CCTV SYSTEM)

SCALE: 1:200

E-386B

DATE	REVISED BY	DATE	REVISED
11/12	JH	11/12	RG

CALCULATED/DESIGNED BY JH
CHECKED BY RG

DESIGN OVERSIGHT
BEHZAD GOLEMOHAMMADI

STATE OF CALIFORNIA - DEPARTMENT OF TRANSPORTATION
Caltrans

LAST REVISION 00-00-00
DATE PLOTTED => 19-DEC-2012
TIME PLOTTED => 17:24

THIS PLAN ACCURATE FOR ELECTRICAL WORK ONLY.

ALL DIMENSIONS ARE IN METERS UNLESS OTHERWISE SHOWN

FOR REDUCED PLANS ORIGINAL SCALE IS IN MILLIMETERS 0 20 40 60 80

DGN FILE =>04-0120f1_0350S05.dgn
USERNAME =>Llorico

CU 04251

EA 0120F1

DIST	COUNTY	ROUTE	KILOMETER POST TOTAL PROJECT	SHEET No	TOTAL SHEETS
04	SF	80	13.2/13.9	350 S06	1204

REGISTERED ELECTRICAL ENGINEER 11/26/12 DATE

PLANS APPROVAL DATE 11-29-12

REGISTERED PROFESSIONAL ENGINEER DAVID H. OTO No. 10699 Exp. 06/30/2013 ELECTRICAL STATE OF CALIFORNIA

PB AMERICAS, Inc.
A Parsons Brinckerhoff Company
303 Second St., Suite 700N
San Francisco, CA 94107-1317

The State of California or its officers or agents shall not be responsible for the accuracy or completeness of electronic copies of this plan sheet.

Caltrans now has a web site! To get to the web site, go to http://www.dot.ca.gov

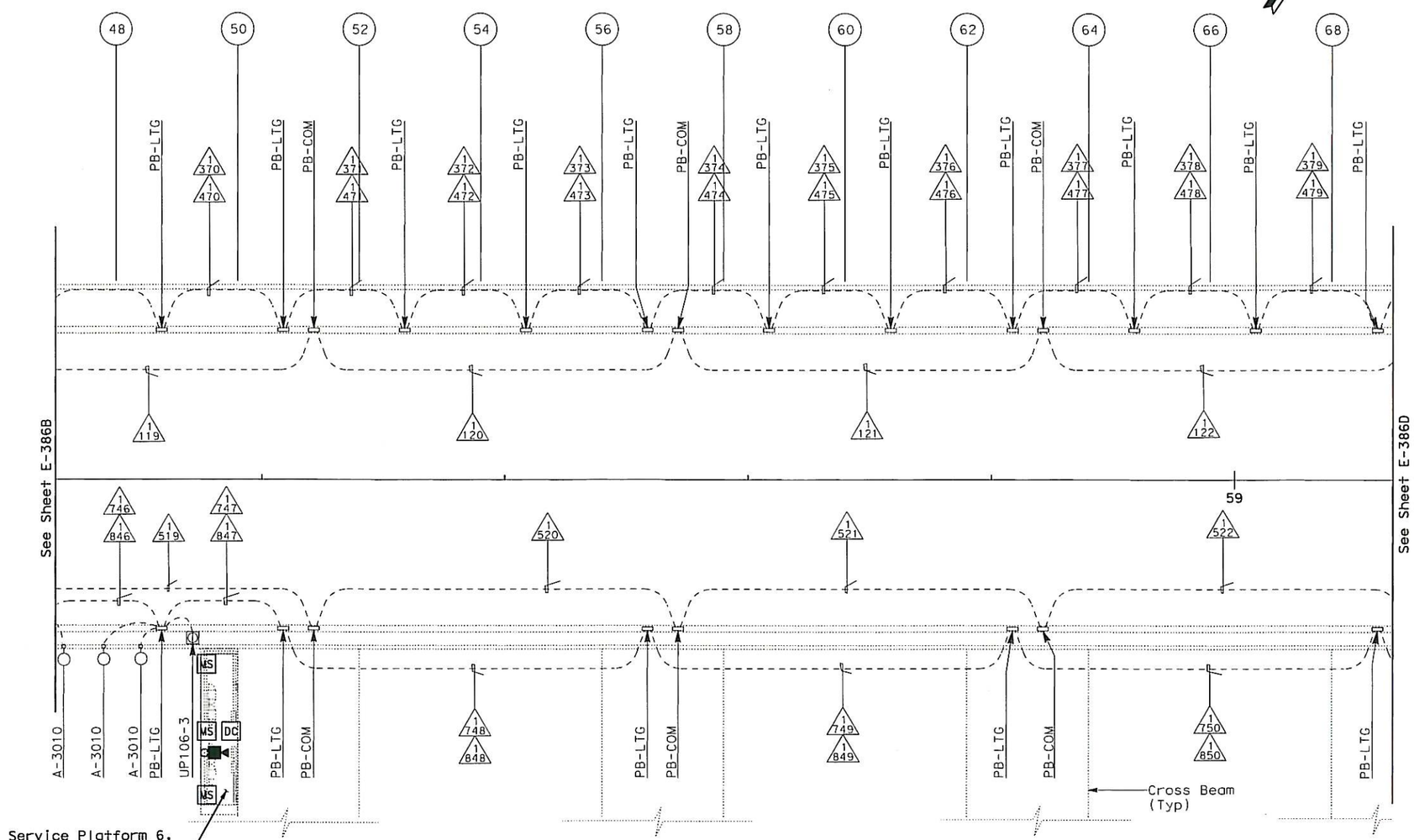

NOTES:

1. Reference:
   - For circuit and conduit/cable tray schedules, see sheets starting at E-400 series.
   - For cable block riser diagram, see sheets E-391C thru E-391N.

REQUEST FOR INFORMATION NOT ADDRESSED IN THIS CCO REMAIN IN FORCE					
0	12/18/12	Install Base CCTV System	JH	RG	150S1
MARK	DATE	DESCRIPTIONS	BY	CH'D	CCO#
		REVISIONS			

CONTRACT CHANGE ORDER NO. 150 S1
SHEET 20 OF 86

SAS SUPERSTRUCTURE ROADWAY WESTBOUND
(BASE CCTV SYSTEM)

SCALE: 1:200

E-386C

DESIGN OVERSIGHT	BEHZAD GOLEMOHAMMADI	CALCULATED/DESIGNED BY	JH
		CHECKED BY	RG
		DATE	11/12
		REVISED BY	
		DATE REVISED	

STATE OF CALIFORNIA - DEPARTMENT OF TRANSPORTATION

Caltrans

THIS PLAN ACCURATE FOR ELECTRICAL WORK ONLY.

ALL DIMENSIONS ARE IN METERS UNLESS OTHERWISE SHOWN

FOR REDUCED PLANS ORIGINAL SCALE IS IN MILLIMETERS 0 20 40 60 80

DGN FILE =>04-0120f1_0350S06.dgn
USERNAME =>Llorico

CU 04251

EA 0120F1

LAST REVISION 00-00-00

DATE PLOTTED => 18-DEC-2012
TIME PLOTTED => 17:24

DIST	COUNTY	ROUTE	KILOMETER POST TOTAL PROJECT	SHEET No	TOTAL SHEETS
04	SF	80	13.2/13.9	350 S07	1204

REGISTERED ELECTRICAL ENGINEER 11/26/12 DATE

PLANS APPROVAL DATE 11-29-12

REGISTERED PROFESSIONAL ENGINEER DAVID H. OTO No. 10699 Exp. 06/30/2013 ELECTRICAL STATE OF CALIFORNIA

PB AMERICAS, Inc.
A Parsons Brinckerhoff Company
303 Second St., Suite 700N
San Francisco, CA 94107-1317

The State of California or its officers or agents shall not be responsible for the accuracy or completeness of electronic copies of this plan sheet.

Caltrans now has a web site! To get to the web site, go to http://www.dot.ca.gov

Caltrans Metric

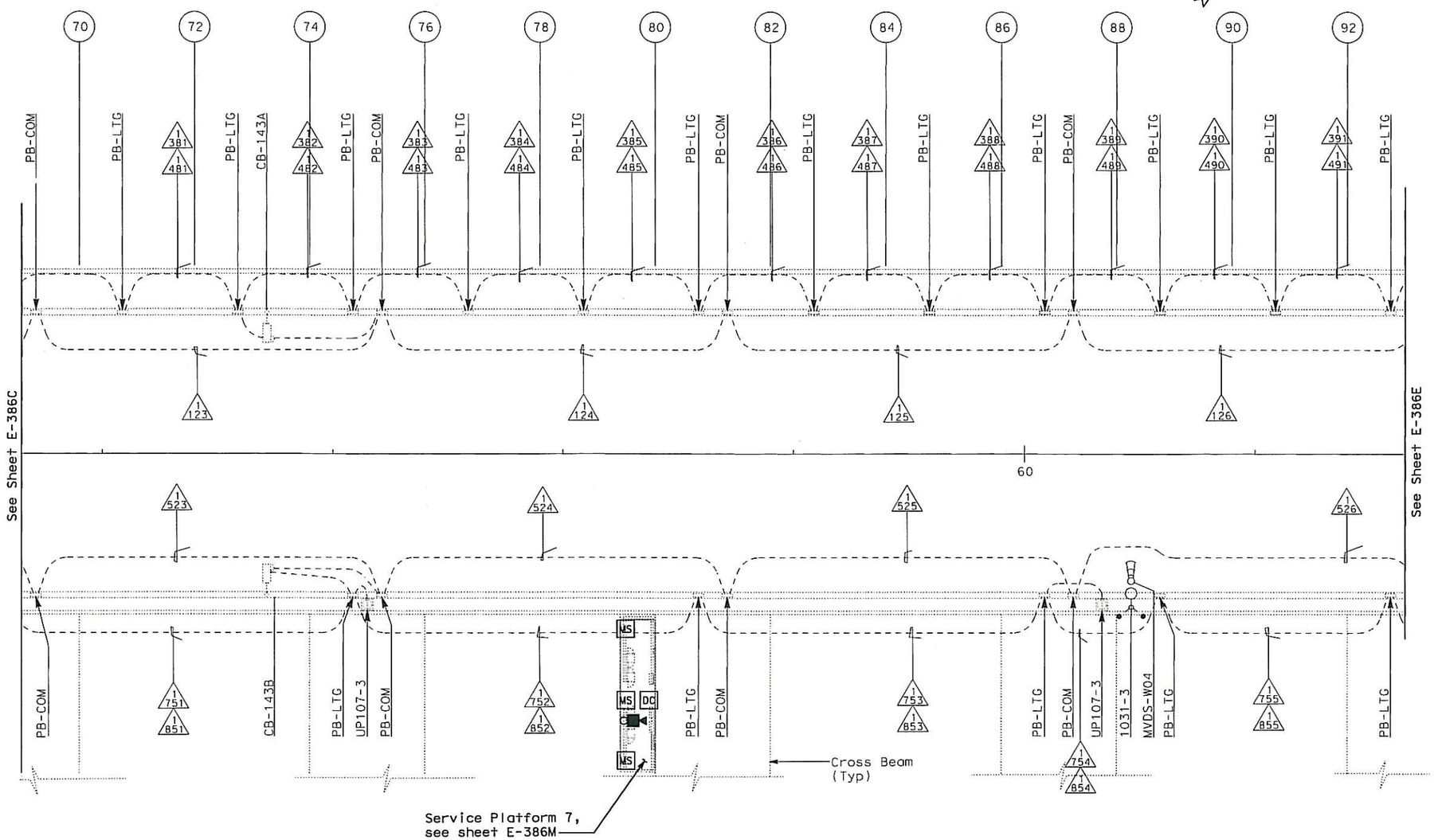

NOTES:

1. Reference:
   - For circuit and conduit/cable tray schedules, see sheets starting at E-400 series.
   - For cable block riser diagram, see sheets E-391C thru E-391N.

REQUEST FOR INFORMATION NOT ADDRESSED IN THIS CCO REMAIN IN FORCE					
0	12/18/12	Install Base CCTV System	JH	RG	150S1
MARK	DATE	DESCRIPTIONS	BY	CH'D	CCO#
		REVISIONS			

CONTRACT CHANGE ORDER NO. 150 S1
SHEET 21 OF 86

SAS SUPERSTRUCTURE ROADWAY WESTBOUND
(BASE CCTV SYSTEM)
SCALE: 1:200

E-386D

CALCULATED/ DESIGNED BY	JH	DATE 11/12	REVISED BY	DATE REVISED
CHECKED BY	RG	11/12		

DESIGN OVERSIGHT
BEHZAD GOLEMOHAMMADI

STATE OF CALIFORNIA - DEPARTMENT OF TRANSPORTATION
Caltrans

LAST REVISION 00-00-00
DATE PLOTTED => 18-DEC-2012
TIME PLOTTED => 17:24

THIS PLAN ACCURATE FOR ELECTRICAL WORK ONLY.

ALL DIMENSIONS ARE IN METERS UNLESS OTHERWISE SHOWN

FOR REDUCED PLANS ORIGINAL SCALE IS IN MILLIMETERS 0 20 40 60 80

DGN FILE =>04-0120f1_0350S07.dgn
USERNAME =>Llorico

CU 04251

EA 0120F1

DIST	COUNTY	ROUTE	KILOMETER POST TOTAL PROJECT	SHEET No	TOTAL SHEETS
04	SF	80	13.2/13.9	350 508	1204

REGISTERED ELECTRICAL ENGINEER 11/26/12 DATE

PLANS APPROVAL DATE 11-29-12

REGISTERED PROFESSIONAL ENGINEER DAVID H. OTO No. 10699 Exp. 06/30/2013 ELECTRICAL STATE OF CALIFORNIA

PB AMERICAS, Inc.
A Parsons Brinckerhoff Company
303 Second St., Suite 700N
San Francisco, CA 94107-1317

The State of California or its officers or agents shall not be responsible for the accuracy or completeness of electronic copies of this plan sheet.

Caltrans now has a web site! To get to the web site, go to http://www.dot.ca.gov

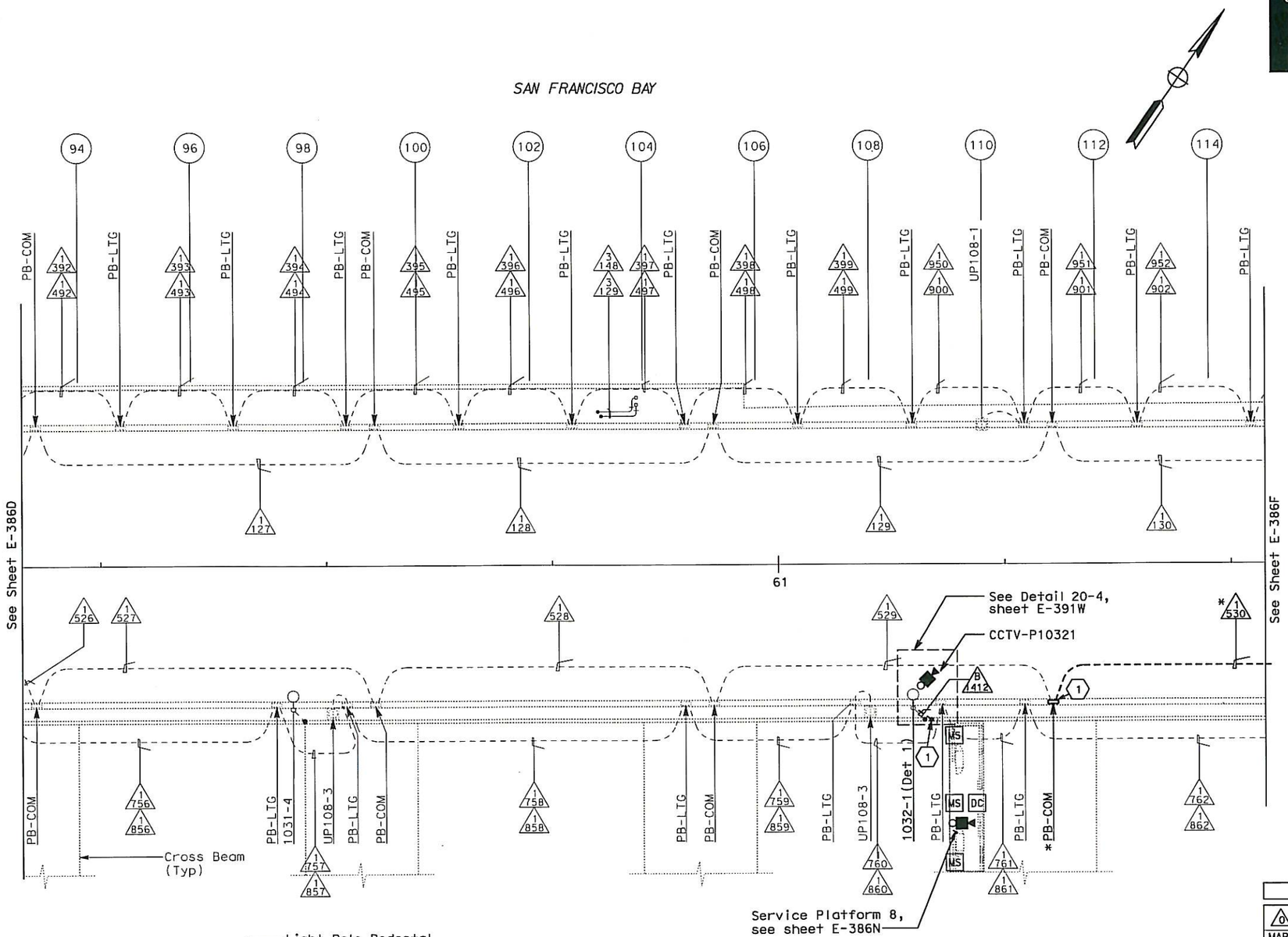

CONDUIT PLAN

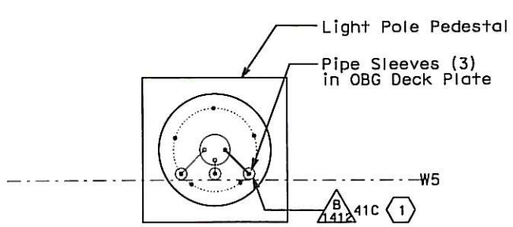

DETAIL 1

SHEET NOTES:

(1) For continuation, see sheet E-387E.

NOTES:

1. Reference:
   - For circuit and conduit/cable tray schedules, see sheets starting at E-400 series.
   - For cable block riser diagram, see sheets E-391C thru E-391N.
   - For typical details and locations of conduit connections to light poles, see sheet E-386H

REQUEST FOR INFORMATION NOT ADDRESSED IN THIS CCO REMAIN IN FORCE					
0	12/18/12	Install Base CCTV System	RSB JH	RG	150S1
MARK	DATE	DESCRIPTIONS	BY	CH'D	CCO#
		REVISIONS			

CONTRACT CHANGE ORDER NO. 150 S1
SHEET 22 OF 86

SAS SUPERSTRUCTURE ROADWAY WESTBOUND
(BASE CCTV SYSTEM)

SCALE: 1:200

E-386E

	DATE 11/12	REVISED BY	DATE REVISED
CALCULATED/DESIGNED BY	JH		
CHECKED BY	RG		

DESIGN OVERSIGHT
BEHZAD GOLEMOHAMMADI

STATE OF CALIFORNIA - DEPARTMENT OF TRANSPORTATION

LAST REVISION 00-00-00 | DATE PLOTTED => 18-DEC-2012 | TIME PLOTTED => 17:24

THIS PLAN ACCURATE FOR ELECTRICAL WORK ONLY.

ALL DIMENSIONS ARE IN METERS UNLESS OTHERWISE SHOWN

FOR REDUCED PLANS ORIGINAL SCALE IS IN MILLIMETERS 0 20 40 60 80

DGN FILE =>04-0120f1_0350S08.dgn
USERNAME =>Llorico

CU 04251 | EA 0120F1

DIST	COUNTY	ROUTE	KILOMETER POST TOTAL PROJECT	SHEET No	TOTAL SHEETS
04	SF	80	13.2/13.9	350 S09	1204

REGISTERED ELECTRICAL ENGINEER 11/26/12 DATE

PLANS APPROVAL DATE 11-29-12

REGISTERED PROFESSIONAL ENGINEER DAVID H. OTO No. 10699 Exp. 06/30/2013 ELECTRICAL STATE OF CALIFORNIA

PB AMERICAS, Inc.
A Parsons Brinckerhoff Company
303 Second St., Suite 700N
San Francisco, CA 94107-1317

The State of California or its officers or agents shall not be responsible for the accuracy or completeness of electronic copies of this plan sheet.

Caltrans now has a web site! To get to the web site, go to http://www.dot.ca.gov

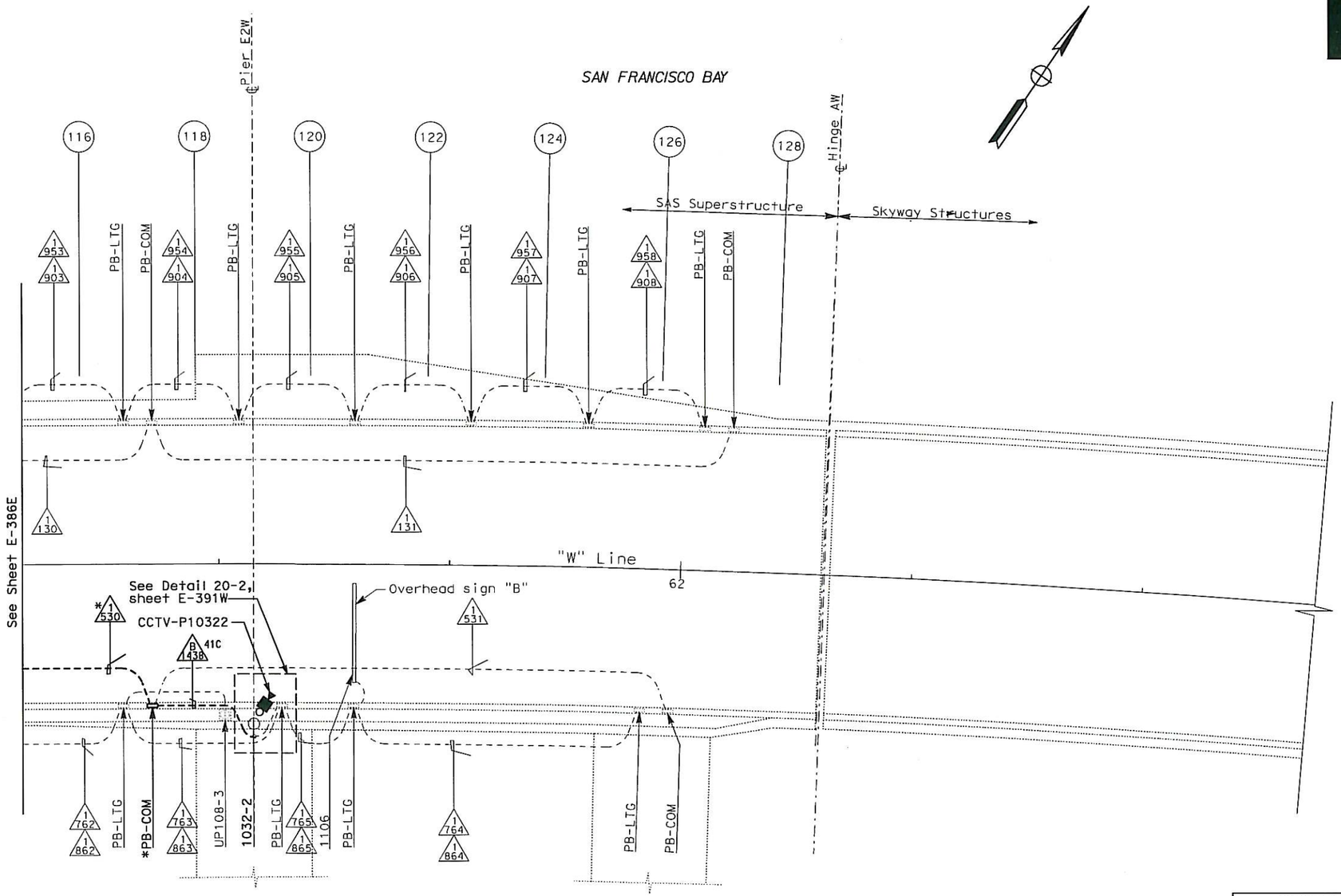

CONDUIT PLAN

NOTES:

1. Reference:
   - For circuit and conduit/cable tray schedules, see sheets starting at E-400 series.
   - For cable block riser diagram, see sheets E-391C thru E-391N.
   - For typical details and locations of conduit connections to light poles, see sheet E-386H.

REQUEST FOR INFORMATION NOT ADDRESSED IN THIS CCO REMAIN IN FORCE					
0	12/18/12	Install Base CCTV System	RSB JH	RG	150S1
MARK	DATE	DESCRIPTIONS	BY	CH'D	CCO#
REVISIONS					

CONTRACT CHANGE ORDER NO. 150 S1
SHEET 23 OF 86

SAS SUPERSTRUCTURE ROADWAY WESTBOUND
(BASE CCTV SYSTEM)
SCALE: 1:200

E-386F

DATE	REVISED BY	DATE	REVISED
JH	RG	11/12	11/12

CALCULATED/DESIGNED BY — CHECKED BY

DESIGN OVERSIGHT — BEHZAD GOLEMOHAMMADI

STATE OF CALIFORNIA - DEPARTMENT OF TRANSPORTATION

Caltrans

LAST REVISION 00-00-00 — DATE PLOTTED => 18-DEC-2012 TIME PLOTTED => 17:24

THIS PLAN ACCURATE FOR ELECTRICAL WORK ONLY.

ALL DIMENSIONS ARE IN METERS UNLESS OTHERWISE SHOWN

FOR REDUCED PLANS ORIGINAL SCALE IS IN MILLIMETERS 0 20 40 60 80

DGN FILE =>04-0120f1_0350S09.dgn
USERNAME =>Llorico

CU 04251 | EA 0120F1

UTILITY PANEL UP-106 (CKT #1097) (1)

Location: SAS SUPERSTRUCTURE SERVICE PLATFORM #6

LOAD DESCRIPTION	LTG	REC	OTH.	CB		CB	LTG	REC	OTH.	LOAD DESCRIPTION
Recept (1) Westbound North Barrier		180		20/1	1 A 2	20/1				Spare
Recept (2) Westbound South Barrier		360		20/1	3 B 4	20/1				Spare
Recept (2) Service Platform #6		360		20/1	5 C 6	20/1	820			Crossbeam Ltg (20)
Recept (2) Girder		360		20/1	7 A 8	20/1	1230			Girder Lighting (30)
Recept (5) Crossbeams		720		20/1	9 B 10	30/1			2000	Controller Cabinet #TOS-6WA
Spare				20/1	11 C 12	20/1				
Spare				20/1	13 A 14	20/1			1000	Base Camera Panel BCP-SP6
Spare				20/1	15 B 16	20/1			1000	Base Camera Panel BCP-SP6 (UPS Power)
Spare				20/1	17 C 18	20/1			1000	Base Camera Panel BCP-SP6 (Exhaust Fan)
↓				20/1	19 A 20	20/1				Spare
Spare				20/1	21 B 22	20/1				Spare
↓				20/1	23 C 24	20/1				↓
TOTAL VA		1980					2050		5000	TOTAL VA

LOAD SUMMARY (INCLUDES .90 PF) (VA)

Lighting (At 100%): 2050
Gen Use (1st 10 kVA At 100% Plus 50% OF Remainder): 6980

TOTAL kVA: 9.030

BALANCE (kVA)

Phase A - 2.770
Phase B - 4.080
Phase C - 2.180

VOLTAGE: 208/120 V
PHASE/WIRES: 3-phase, 4-wire
BUS RATING: 100 A
MAIN: 60 A
MOUNTING: Surface
K.A.I.C.: 10

THIS PLAN ACCURATE FOR ELECTRICAL WORK ONLY.

Caltrans Metric

DIST	COUNTY	ROUTE	KILOMETER POST TOTAL PROJECT	SHEET No	TOTAL SHEETS
04	SF	80	13.2/13.9	350 S10	1204

REGISTERED ELECTRICAL ENGINEER 11/26/12 DATE

PLANS APPROVAL DATE 11-29-12

REGISTERED PROFESSIONAL ENGINEER DAVID H. OTO No. 10699 Exp. 06/30/2013 ELECTRICAL STATE OF CALIFORNIA

PB AMERICAS, Inc.
A Parsons Brinckerhoff Company
303 Second St., Suite 700N
San Francisco, CA 94107-1317

The State of California or its officers or agents shall not be responsible for the accuracy or completeness of electronic copies of this plan sheet.

Caltrans now has a web site! To get to the web site, go to http://www.dot.ca.gov

SHEET NOTES:

(1) See sheet E-386L for Panel Location.

NOTES:

1. The Contractor shall add circuit schedules as shown.
2. References:
   - For circuit and conduit/cable tray schedules, see sheets starting at E-400 series.
   - For cable block riser diagram, see sheets E-391C thru E-391N.

REQUEST FOR INFORMATION NOT ADDRESSED IN THIS CCO REMAIN IN FORCE					
0	12/18/12	Install Base CCTV System	JH	RG	150S1
MARK	DATE	DESCRIPTIONS	BY	CH'D	CCO#
REVISIONS					

CONTRACT CHANGE ORDER NO. 150 S1
SHEET 24 OF 86

DETAILS
SAS SUPERSTRUCTURE ROADWAY WESTBOUND PANEL UP-106 SCHEDULE (BASE CCTV SYSTEM)

NO SCALE

E-386G

STATE OF CALIFORNIA - DEPARTMENT OF TRANSPORTATION
Caltrans

DESIGN OVERSIGHT: BEHZAD GOLEMOHAMMADI

CALCULATED/DESIGNED BY: JH | DATE 11/12 | REVISED BY
CHECKED BY: RG | 11/12 | DATE REVISED

LAST REVISION 00-00-00 | DATE PLOTTED => 18-DEC-2012 | TIME PLOTTED => 17:24

DIST	COUNTY	ROUTE	KILOMETER POST TOTAL PROJECT	SHEET No	TOTAL SHEETS
04	SF	80	13.2/13.9	350 S11	1204

REGISTERED ELECTRICAL ENGINEER 11/26/12 DATE

PLANS APPROVAL DATE 11-29-12

REGISTERED PROFESSIONAL ENGINEER DAVID H. OTO No. 10699 Exp. 06/30/2013 ELECTRICAL STATE OF CALIFORNIA

PB AMERICAS, Inc.
A Parsons Brinckerhoff Company
303 Second St., Suite 700N
San Francisco, CA 94107-1317

The State of California or its officers or agents shall not be responsible for the accuracy or completeness of electronic copies of this plan sheet.

Caltrans now has a web site! To get to the web site, go to http://www.dot.ca.gov

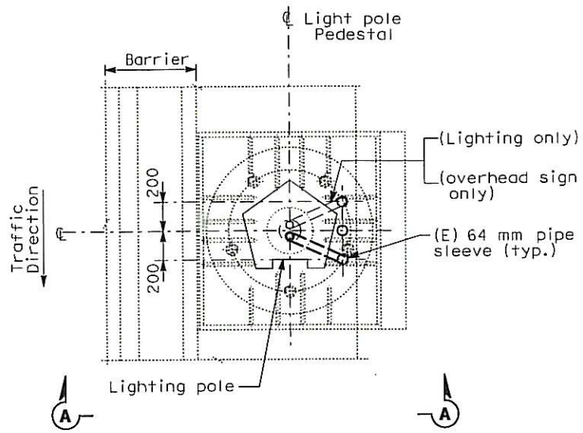

PLAN
CONDUIT STUB-UP PLAN FOR ROADWAY LIGHTING ON A METAL BASE (SIMILAR FOR OVERHEAD SIGN ON A METAL BASE EXCEPT AS NOTED)
SCALE 1:20

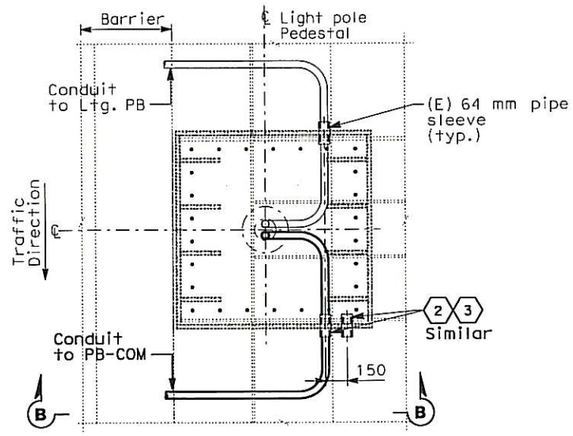

PLAN
CONDUIT STUB-UP PLAN FOR ROADWAY LIGHTING ON A METAL BASE AT PIER E2 ONLY
SCALE 1:20

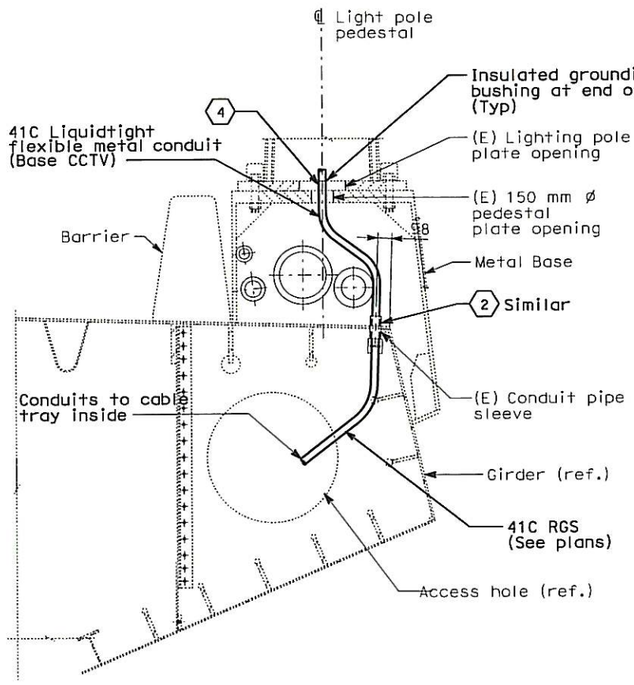

SECTION A-A
LIGHT POLE METAL PEDESTAL CONDUIT TYPICAL INSTALLATION
SCALE 1:20

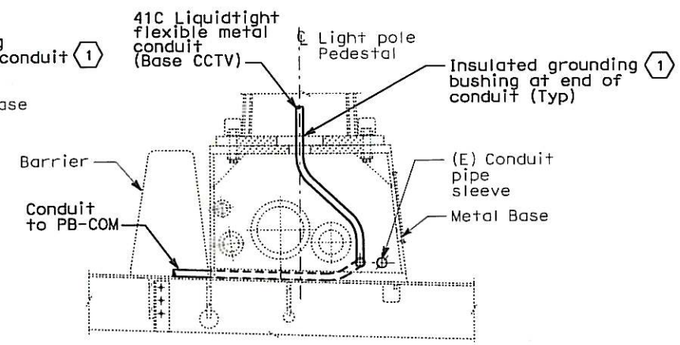

SECTION B-B
SCALE 1:20

SHEET NOTES:

1. Bond grounding bushing to ground lug of lighting pole with #6 bare copper wire.
2. See Utility Detail No. 1 (Sheet No. 965 of 1204) for conduit penetration through girder plate and lighting pole metal base. The Contractor shall install sealant between the sleeve and conduit to prevent water or moisture from passing inside the sleeve.
3. Cap spare sleeves for future use where noted.
4. Ensure that the maximum of three conduits passing through the 150 mm ø pedestal plate opening are separated as much as possible from each other.

NOTES:

1. References:
   - For location of lighting poles, see sheet E-386A thru E-386F.

REQUEST FOR INFORMATION NOT ADDRESSED IN THIS CCO REMAIN IN FORCE

MARK	DATE	DESCRIPTIONS	BY	CH'D	CCO#
0	12/18/12	Install Base CCTV System	JH	RG	150S1

REVISIONS

CONTRACT CHANGE ORDER NO. 150 S1
SHEET 25 OF 86

DETAILS
SAS SUPERSTRUCTURE ROADWAY WESTBOUND CONDUIT LOCATIONS (BASE CCTV SYSTEM)
SCALE AS NOTED

E-386H

DESIGN OVERSIGHT	CALCULATED/DESIGNED BY	CHECKED BY	REVISED BY	DATE REVISED
BEHZAD GOLEMOHAMMADI	JH	RG		
	DATE 11/12	11/12		

STATE OF CALIFORNIA - DEPARTMENT OF TRANSPORTATION

LAST REVISION 00-00-00 | DATE PLOTTED => 18-DEC-2012 | TIME PLOTTED => 17:24

THIS PLAN ACCURATE FOR ELECTRICAL WORK ONLY.

ALL DIMENSIONS ARE IN MILLIMETERS UNLESS OTHERWISE SHOWN.

FOR REDUCED PLANS ORIGINAL SCALE IS IN MILLIMETERS 0 20 40 60 80

DGN FILE =>04-0120f1_0350S11.dgn
USERNAME =>Llorico

CU 04251 | EA 0120F1

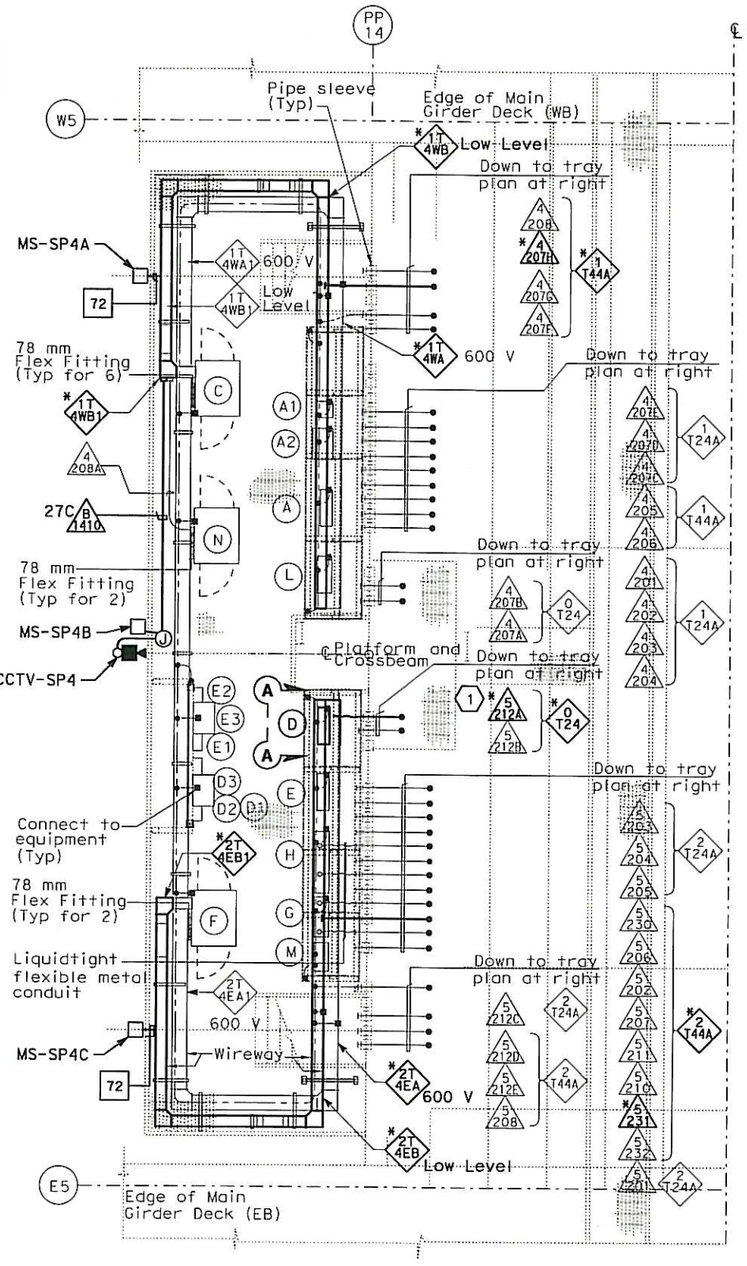

WIREWAY AND CONDUIT PLAN AT SERVICE PLATFORM

SCALE 1:40

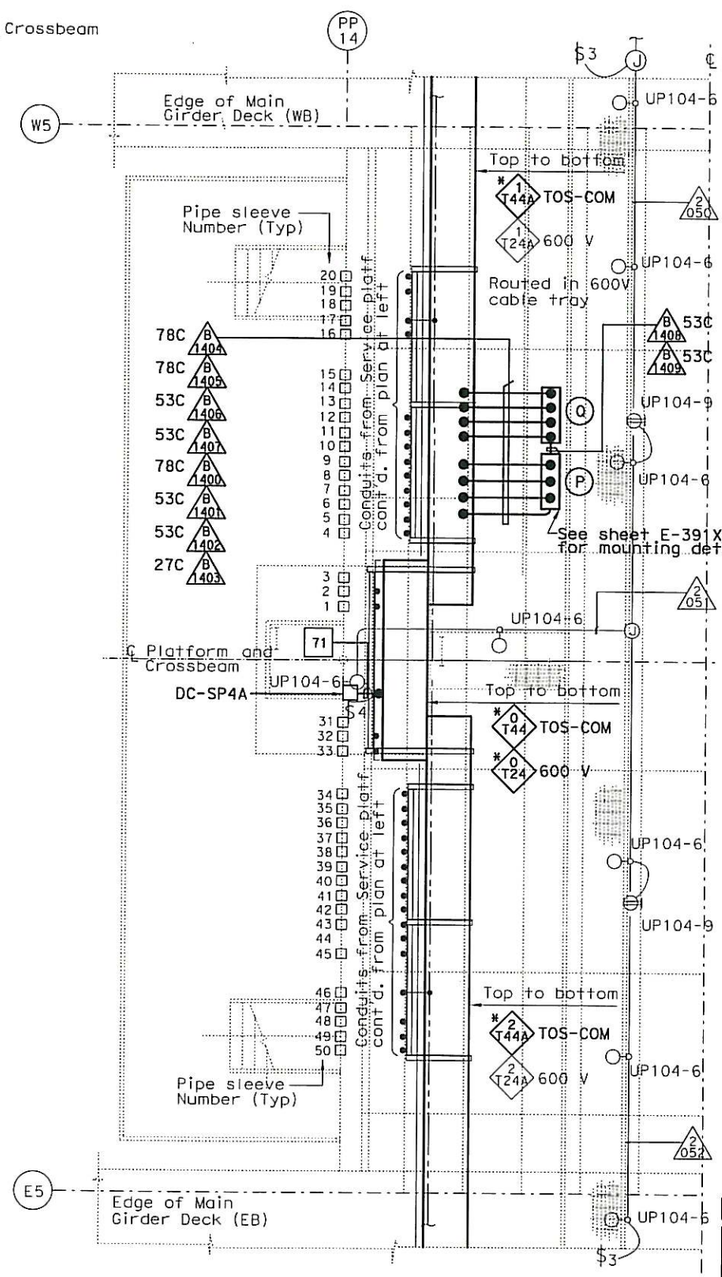

CABLE TRAY AND CONDUIT PLAN INSIDE CROSSBEAM

SCALE 1:40

EQUIPMENT SCHEDULE:

Equipment for Westbound

- (A) (E) Utility Panel, UP-104, 100A 208/120 V, 3-phase, 4-wire
- (A1) (E) 480 V Breaker for (A2) (Nema 4X)
- (A2) (E) 15 kVA Transformer, 3 phase, 60 hz 480 V-208/120 V, 3 phase (Nema 4X)
- (C) (E) Controller Cabinet #TOS-4WA.
- (L) (E) TOS/COM-4WA Pull Box (PB-2B)
- (N) (E) Controller Cabinet #TOS-4WB (Temporary)

Equipment for Eastbound

- *(D) (E) Utility Panel, UP-204, 100A MLO 208/120 V, 3-phase, 4-wire
- (D1) (E) 480 V Breaker for (D2) (Nema 4X)
- (D2) (E) 15 kVA Transformer, 3 phase, 60 hz 480 V-208/120 V, 3 phase (Nema 4X)
- (D3) (E) Enclosed circuit breaker 10 kAIC 240 V 3 phase in NEMA 4X enclosure.
- (E) (E) Lighting Panel LP-219, 100A MLO 208/120 V, 3-phase, 4-wire
- (E1) (E) 480 V Breaker for (E2) (Nema 4X)
- (E2) (E) 15 kVA Transformer, 3 phase, 60 hz 480 V-208/120 V, 3 phase (Nema 4X)
- (E3) (E) Enclosed circuit breaker 10 kAIC 240 V 3 phase in NEMA 4X enclosure.
- (F) (E) Controller Cabinet #TOS-4EA.
- (M) (E) TOS/COM-4EA Pull Box (PB-2B)

Equipment Common for Westbound/Eastbound

- (G) (E) Telephone Terminal Box #TEL-4 (PB-7C)
- (H) (E) Communication Terminal Box #COM-4 (PB-7B)
- (P) Base Camera Transition Panel #BCTP-SP4A 914 H x 762 W x 254 D
- (Q) Base Camera Transition Panel #BCTP-SP4B 914 H x 762 W x 254 D

SHEET NOTES:

(1) Extend conduit to 2T4EA.

NOTES:

1. References:
   - For circuit and conduit/cable tray schedules, see sheets starting at E-400 series.
   - For cable block riser diagram, see sheets E-391C thru E-391N.
   - For typical camera and motion sensor details and conduit connections, see sheet E-391Z.
   - For UP-204 Panel Schedule see sheet E-388G.

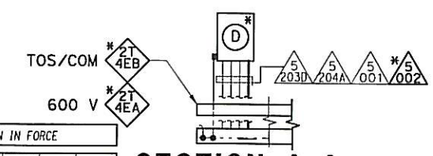

SECTION A-A

SCALE 1:40

REQUEST FOR INFORMATION NOT ADDRESSED IN THIS CCO REMAIN IN FORCE

MARK	DATE	DESCRIPTIONS	BY	CH'D	CCO#
0	12/18/12	Install Base CCTV System	RSB JH	RG	150S1

REVISIONS

CONTRACT CHANGE ORDER NO. 150 S1
SHEET 26 OF 86

DETAILS
SAS SUPERSTRUCTURE ROADWAY WESTBOUND PLATFORM 4 ARRANGEMENT (BASE CCTV SYSTEM)

SCALE AS NOTED

E-386J

DIST	COUNTY	ROUTE	KILOMETER POST TOTAL PROJECT	SHEET No	TOTAL SHEETS
04	SF	80	13.2/13.9	350 S12	1204

REGISTERED ELECTRICAL ENGINEER 11/26/12 DATE

11-29-12
PLANS APPROVAL DATE

REGISTERED PROFESSIONAL ENGINEER DAVID H. OTO No. 10699 Exp. 06/30/2013 ELECTRICAL STATE OF CALIFORNIA

PB AMERICAS, Inc.
A Parsons Brinckerhoff Company
303 Second St., Suite 700N
San Francisco, CA 94107-1317

The State of California or its officers or agents shall not be responsible for the accuracy or completeness of electronic copies of this plan sheet.

Caltrans now has a web site! To get to the web site, go to http://www.dot.ca.gov

STATE OF CALIFORNIA - DEPARTMENT OF TRANSPORTATION
Caltrans

DESIGN OVERSIGHT: BEHZAD GOLEMOHAMMADI

CALCULATED/ DESIGNED BY	DATE 11/12	REVISED BY	DATE REVISED
CHECKED BY	RG		

THIS PLAN ACCURATE FOR ELECTRICAL WORK ONLY.

ALL DIMENSIONS ARE IN MILLIMETERS UNLESS OTHERWISE SHOWN.

FOR REDUCED PLANS ORIGINAL SCALE IS IN MILLIMETERS 0 20 40 60 80

DGN FILE =>04-0120f1_0350S12.dgn
USERNAME =>Llorico

DATE PLOTTED => 18-DEC-2012
TIME PLOTTED => 17:24

LAST REVISION 00-00-00

CU 04251 | EA 0120F1

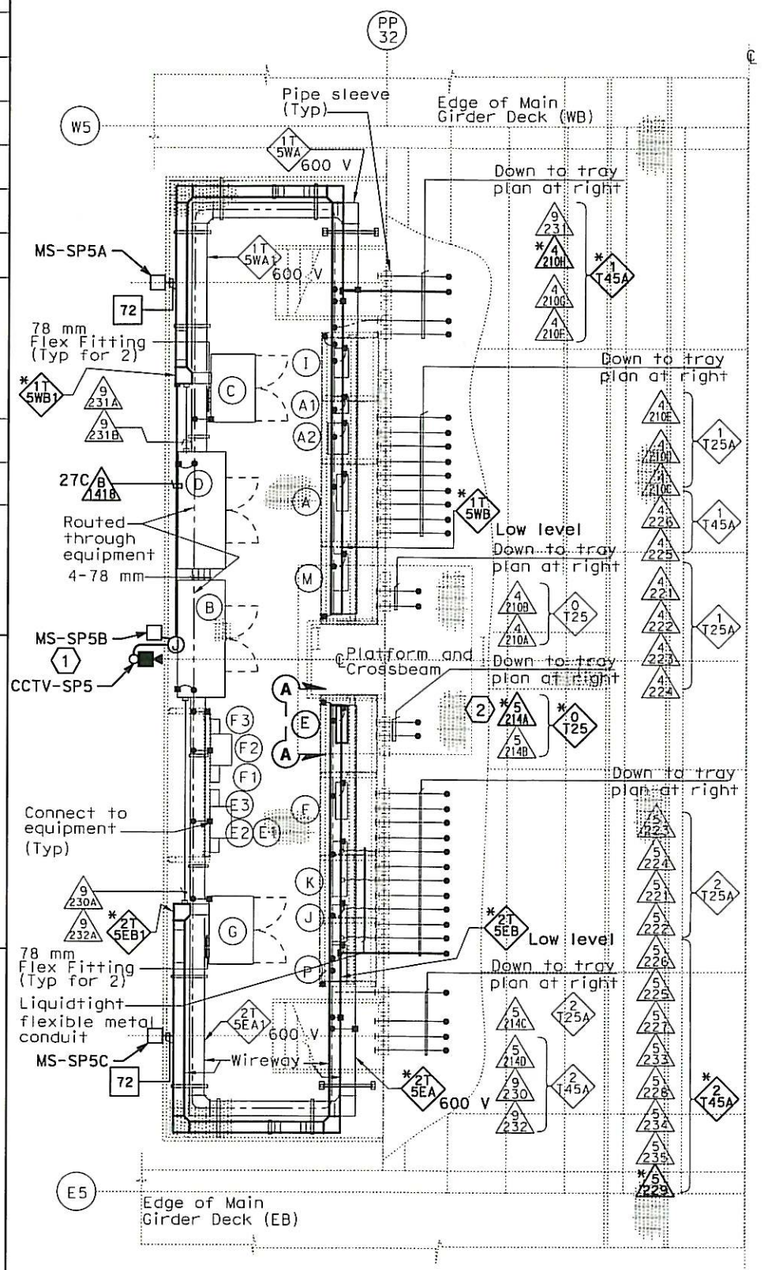

WIREWAY AND CONDUIT PLAN AT SERVICE PLATFORM

SCALE 1:40

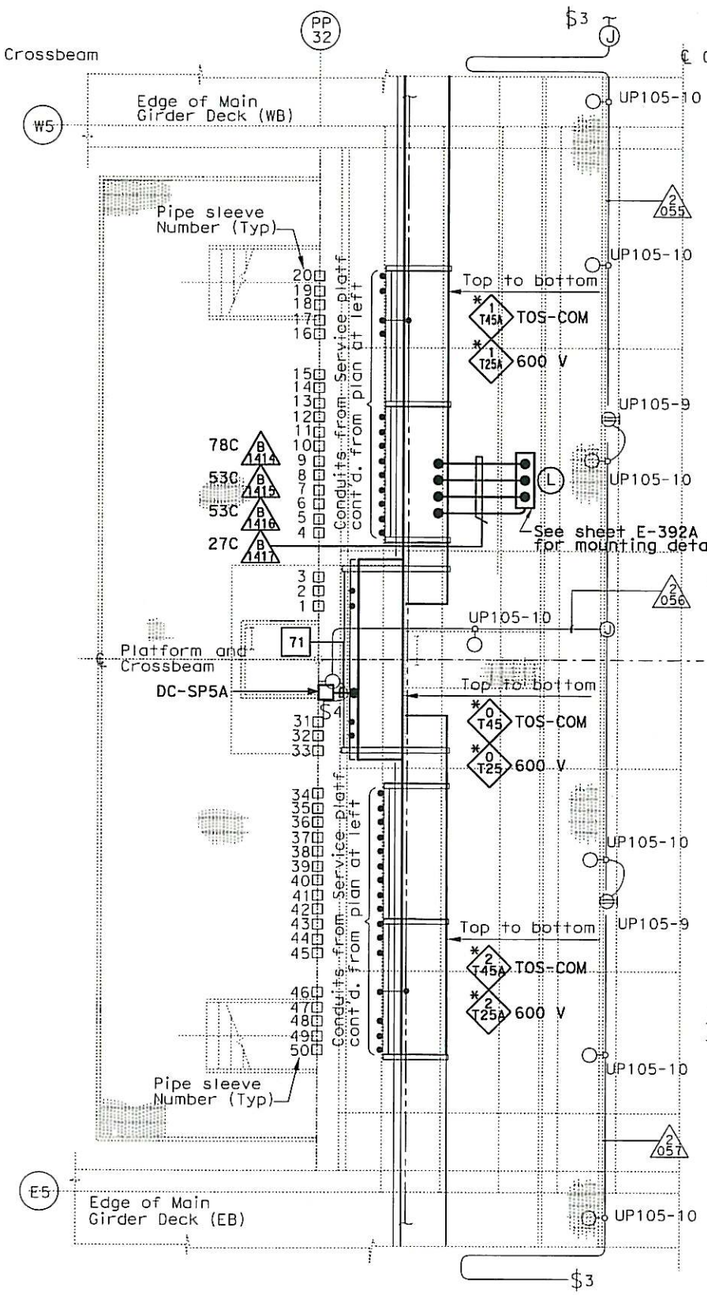

CABLE TRAY AND CONDUIT PLAN INSIDE CROSSBEAM

SCALE 1:40

EQUIPMENT SCHEDULE:

Equipment for Westbound

- (A) (E) Utility Panel, UP-105, 100A 208/120 V, 3-phase, 4-wire
- (A1) (E) 480 V Breaker for (A2) (Nema 4X)
- (A2) (E) 15 kVA Transformer, 3 phase, 60 hz 480 V-208/120 V, 3 phase (Nema 4X)
- (B) (E) Strong Motion Recorder #2 (Box A)
- (C) (E) Remote Terminal Unit RTU #10W
- (D) (E) Strong Motion Recorder #2 (Box B)
- (M) (E) TOS/COM-5WA Pull Box (PB-2B)

Equipment for Eastbound

- *(E) (E) Utility Panel, UP-205, 100A MLO 208/120 V, 3-phase, 4-wire
- (E1) (E) 480 V Breaker for (E2) (Nema 4X)
- (E2) (E) 15 kVA Transformer, 3 phase, 60 hz 480 V-208/120 V, 3 phase (Nema 4X)
- (E3) (E) Enclosed circuit breaker 10 kAIC 240 V 3 phase in NEMA 4X enclosure.
- (F) (E) Lighting Panel LP-220, 100A MLO 208/120 V, 3-phase, 4-wire
- (F1) (E) 480 V Breaker for (F2) (Nema 4X)
- (F2) (E) 15 kVA Transformer, 3 phase, 60 hz 480 V-208/120 V, 3 phase (Nema 4X)
- (F3) (E) Enclosed circuit breaker 10 kAIC 240 V 3 phase in NEMA 4X enclosure.
- (G) (E) Remote Terminal Unit RTU #10E
- (P) (E) TOS/COM-5EA Pull Box (PB-2B)

Equipment Common for Westbound/Eastbound

- (I) (E) Navigation Relay Cabinet NAP-5 (PB-6C)
- (J) (E) Telephone Terminal Box #TEL-5 (PB-7C)
- (K) (E) Communication Terminal Box COM-5 (PB-7B)
- (L) Base Camera Transition Panel #BCTP-SP5A 914 H x 762 W x 254 D

SHEET NOTES:

1. The Contractor to verify that the BASE camera and Motion Sensor elevation is above the Strong Motion Recorder.
2. Extend conduit to 2T5EA.

NOTES:

1. References:
   - For circuit and conduit/cable tray schedules, see sheets starting at E-400 series.
   - For cable block riser diagram, see sheets E-391C thru E-391N.
   - For typical camera and motion sensor details and conduit connections, see sheets E-391Z.
   - For UP-205 Panel Schedule, see sheets E-388G.

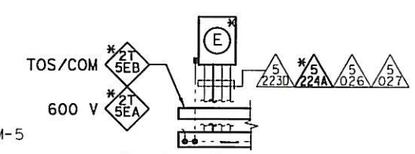

SECTION A-A

SCALE 1:40

DIST	COUNTY	ROUTE	KILOMETER POST TOTAL PROJECT	SHEET NO	TOTAL SHEETS
04	SF	80	13.2/13.9	350 S13	1204

REGISTERED ELECTRICAL ENGINEER 11/26/12 DATE

PLANS APPROVAL DATE 11-29-12

REGISTERED PROFESSIONAL ENGINEER DAVID H. OTO No. 10699 Exp. 06/30/2013 ELECTRICAL STATE OF CALIFORNIA

PB AMERICAS, Inc.
A Parsons Brinckerhoff Company
303 Second St., Suite 700N
San Francisco, CA 94107-1317

The State of California or its officers or agents shall not be responsible for the accuracy or completeness of electronic copies of this plan sheet.

Caltrans now has a web site! To get to the web site, go to http://www.dot.ca.gov

REQUEST FOR INFORMATION NOT ADDRESSED IN THIS CCO REMAIN IN FORCE

MARK	DATE	DESCRIPTIONS	BY	CH'D	CCO#
0	12/18/12	Install Base CCTV System	RSB JH	RG	150S1

REVISIONS

CONTRACT CHANGE ORDER NO. 150 S1
SHEET 27 OF 86

DETAILS
SAS SUPERSTRUCTURE ROADWAY WESTBOUND PLATFORM 5 ARRANGEMENT (BASE CCTV SYSTEM)

SCALE AS NOTED

E-386K

REVISED BY	DATE REVISED
JH	11/12

CALCULATED/ DESIGNED BY	CHECKED BY
RG	

DESIGN OVERSIGHT: BEHZAD GOLEMOHAMMADI

STATE OF CALIFORNIA - DEPARTMENT OF TRANSPORTATION

Caltrans

THIS PLAN ACCURATE FOR ELECTRICAL WORK ONLY.

ALL DIMENSIONS ARE IN MILLIMETERS UNLESS OTHERWISE SHOWN.

FOR REDUCED PLANS ORIGINAL SCALE IS IN MILLIMETERS 0 20 40 60 80

DGN FILE =>04-0120f1_0350S13.dgn
USERNAME =>Liorico

CU 04251 | EA 0120F1

LAST REVISION 00-00-00 | DATE PLOTTED => 18-DEC-2012 | TIME PLOTTED => 17:24

DIST	COUNTY	ROUTE	KILOMETER POST TOTAL PROJECT	SHEET No.	TOTAL SHEETS
04	SF	80	13.2/13.9	350 S14	1204

REGISTERED ELECTRICAL ENGINEER 11/26/12 DATE

11-29-12
PLANS APPROVAL DATE

REGISTERED PROFESSIONAL ENGINEER DAVID H. OTO No. 10699 Exp. 06/30/2013 ELECTRICAL STATE OF CALIFORNIA

PB AMERICAS, Inc.
A Parsons Brinckerhoff Company
303 Second St., Suite 700N
San Francisco, CA 94107-1317

The State of California or its officers or agents shall not be responsible for the accuracy or completeness of electronic copies of this plan sheet.

Caltrans now has a web site! To get to the web site, go to http://www.dot.ca.gov

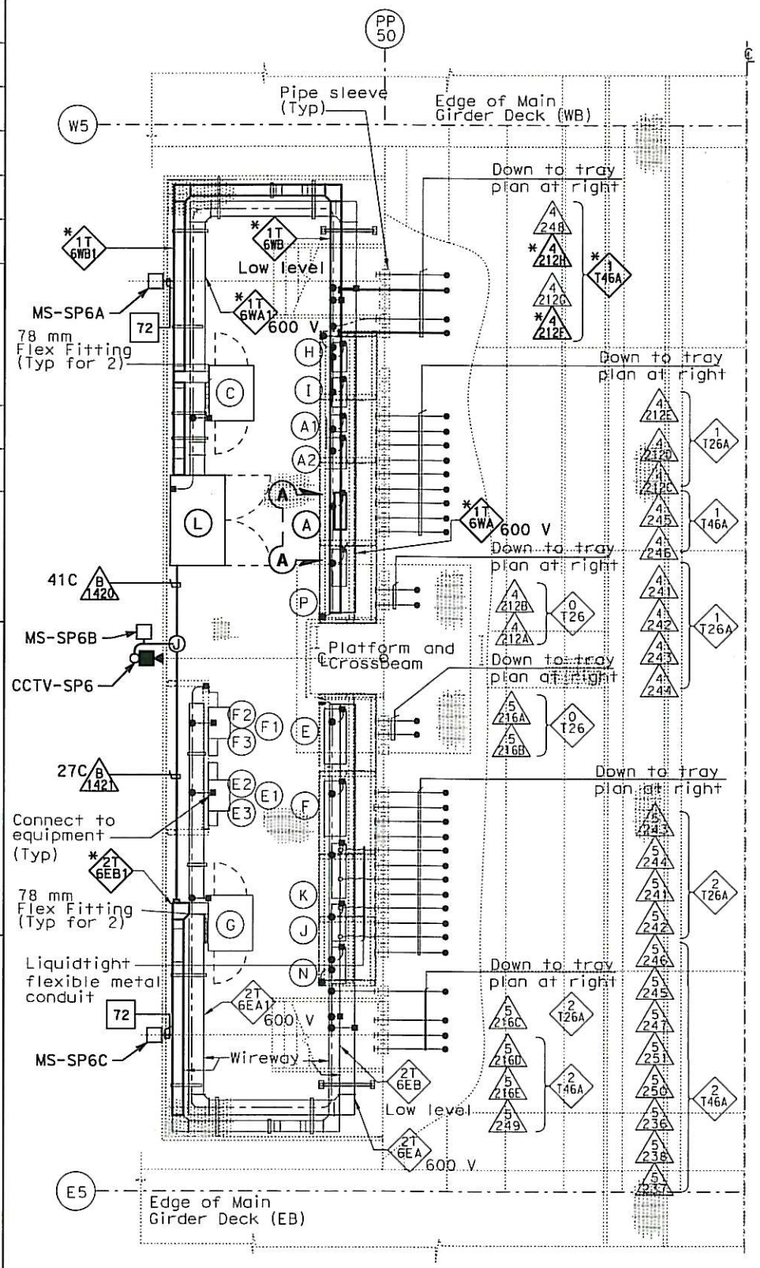

WIREWAY AND CONDUIT PLAN AT SERVICE PLATFORM

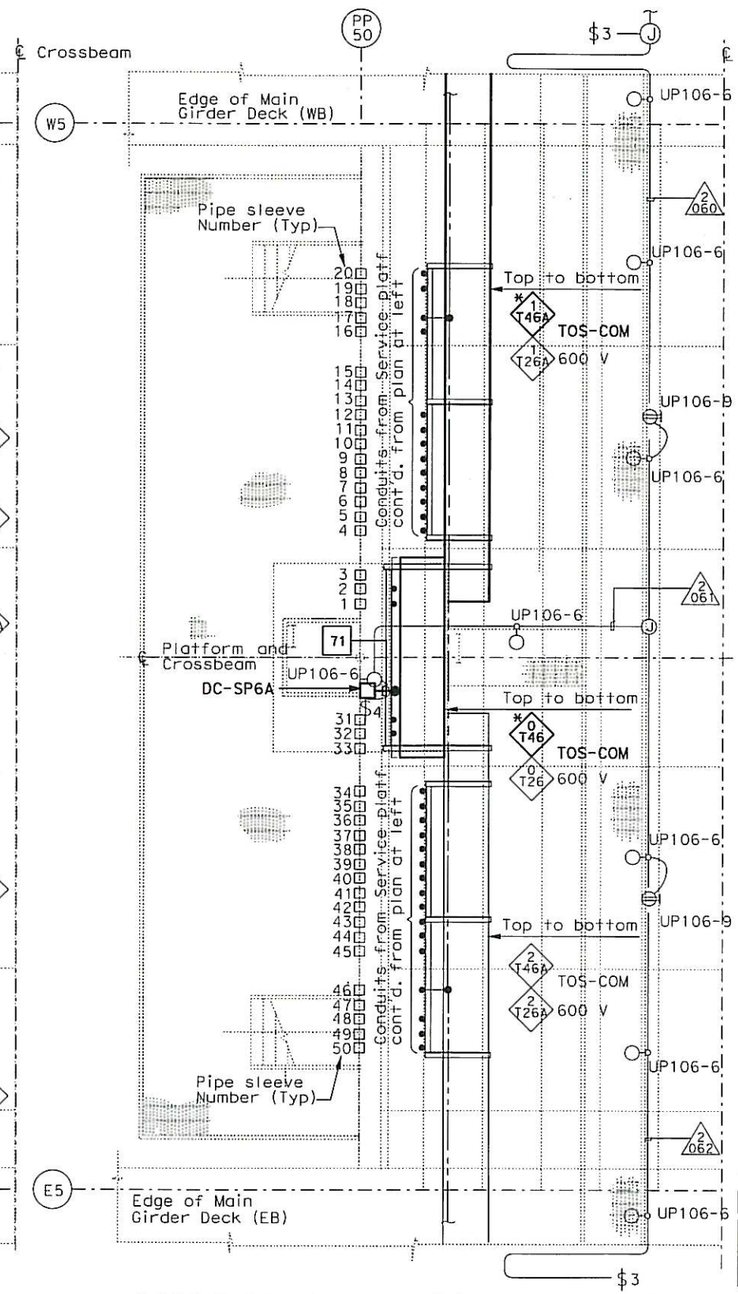

CABLE TRAY AND CONDUIT PLAN INSIDE CROSSBEAM

SCALE 1:40

EQUIPMENT SCHEDULE:

Equipment for Westbound

- *(A) (E) Utility Panel, UP-106, 100A 208/120 V, 3-phase, 4-wire
- (A1) (E) 480 V Breaker for (A2) (Nema 4X)
- (A2) (E) 15 kVA Transformer, 3 phase, 60 hz 480 V-208/120 V, 3 phase (Nema 4X)
- (C) (E) Controller Cabinet TOS-6WA
- (I) (E) Navigation Relay Cabinet NAP-6W (PB-6C)
- (P) (E) TOS/COM-6WA Pull Box (PB-2B)

Equipment for Eastbound

- (E) (E) Utility Panel, UP-206, 100A MLO 208/120 V, 3-phase, 4-wire
- (E1) (E) 480 V Breaker for (E2) (Nema 4X)
- (E2) (E) 15 kVA Transformer, 3 phase, 60 hz 480 V-208/120 V, 3 phase (Nema 4X)
- (E3) (E) Enclosed circuit breaker 10 kAIC 240 V 3 phase in NEMA 4X enclosure.
- (F) (E) Lighting Panel LP-221, 100A MLO 208/120 V, 3-phase, 4-wire
- (F1) (E) 480 V Breaker for LP-221 (Nema 4X)
- (F2) (E) 15 kVA Transformer, 3 phase, 60 hz 480 V-208/120 V, 3 phase (Nema 4X)
- (F3) (E) Enclosed circuit breaker 10 kAIC 240 V 3 phase in NEMA 4X enclosure.
- (G) (E) Controller Cabinet TOS-6EA
- (H) (E) Navigation Relay Cabinet NAP-6E (PB-6C)
- (N) (E) TOS/COM-6EA Pull Box (PB-2B)

Equipment Common for Westbound/Eastbound

- (J) (E) Telephone Terminal Box #TEL-6 (PB-7C)
- (K)
- (L) Base Camera Panel #BCP-SP6 1702 H x 1245 W x 762 D

NOTES:

1. References:
   - For circuit and conduit/cable tray schedules, see sheets starting at E-400 series.
   - For cable block riser diagram, see sheets E-391C thru E-391N.
   - For typical camera and motion sensor details and conduit connections, see sheet E-391Z.
   - For UP-106 Panel Schedule see sheet E-386G.

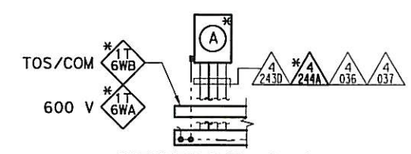

SECTION A-A

SCALE 1:40

REQUEST FOR INFORMATION NOT ADDRESSED IN THIS CCO REMAIN IN FORCE					
0	12/18/12	Install Base CCTV System	RSB JH	RG	150S1
MARK	DATE	DESCRIPTIONS	BY	CH'D	CCO#
		REVISIONS			

CONTRACT CHANGE ORDER NO. 150 S1
SHEET 28 OF 86

DETAILS
SAS SUPERSTRUCTURE ROADWAY WESTBOUND PLATFORM 6 ARRANGEMENT (BASE CCTV SYSTEM)

SCALE AS NOTED

E-386L

REVISED BY	DATE REVISED		
DATE 11/12	JH	RG	11/12
CALCULATED/DESIGNED BY	CHECKED BY		

DESIGN OVERSIGHT
BEHZAD GOLEMOHAMMADI

STATE OF CALIFORNIA - DEPARTMENT OF TRANSPORTATION
Caltrans

THIS PLAN ACCURATE FOR ELECTRICAL WORK ONLY.

ALL DIMENSIONS ARE IN MILLIMETERS UNLESS OTHERWISE SHOWN.

FOR REDUCED PLANS ORIGINAL SCALE IS IN MILLIMETERS 0 20 40 60 80

DGN FILE =>04-0120f1_0350S14.dgn
USERNAME =>Llorico

CU 04251 | EA 0120F1

LAST REVISION 00-00-00
DATE PLOTTED => 18-DEC-2012
TIME PLOTTED => 17:24

DIST	COUNTY	ROUTE	KILOMETER POST TOTAL PROJECT	SHEET No.	TOTAL SHEETS
04	SF	80	13.2/13.9	350 S15	1204

11/26/12
REGISTERED ELECTRICAL ENGINEER DATE

11-29-12
PLANS APPROVAL DATE

REGISTERED PROFESSIONAL ENGINEER DAVID H. OTO No. 10699 Exp. 06/30/2013 ELECTRICAL STATE OF CALIFORNIA

PB AMERICAS, Inc.
A Parsons Brinckerhoff Company
303 Second St., Suite 700N
San Francisco, CA 94107-1317

The State of California or its officers or agents shall not be responsible for the accuracy or completeness of electronic copies of this plan sheet.

Caltrans now has a web site! To get to the web site, go to http://www.dot.ca.gov

Caltrans Metric

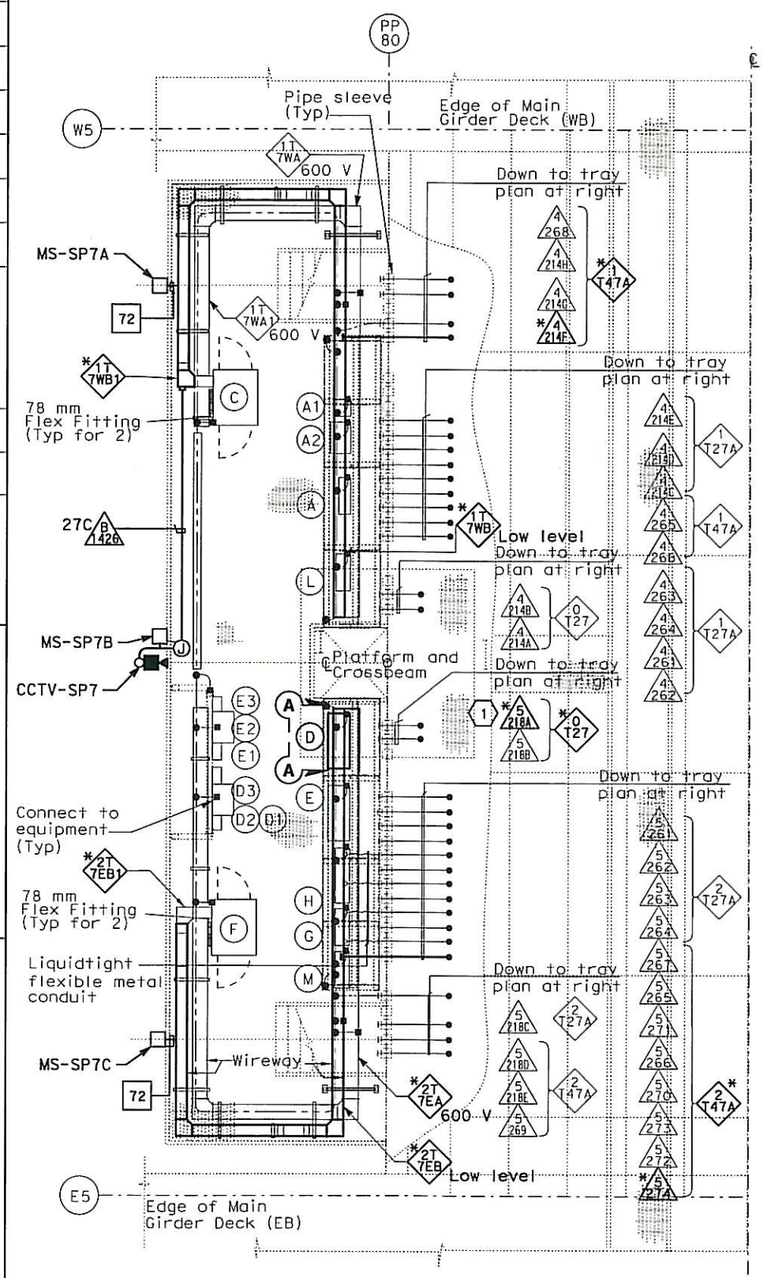

WIREWAY AND CONDUIT PLAN AT SERVICE PLATFORM

SCALE 1:40

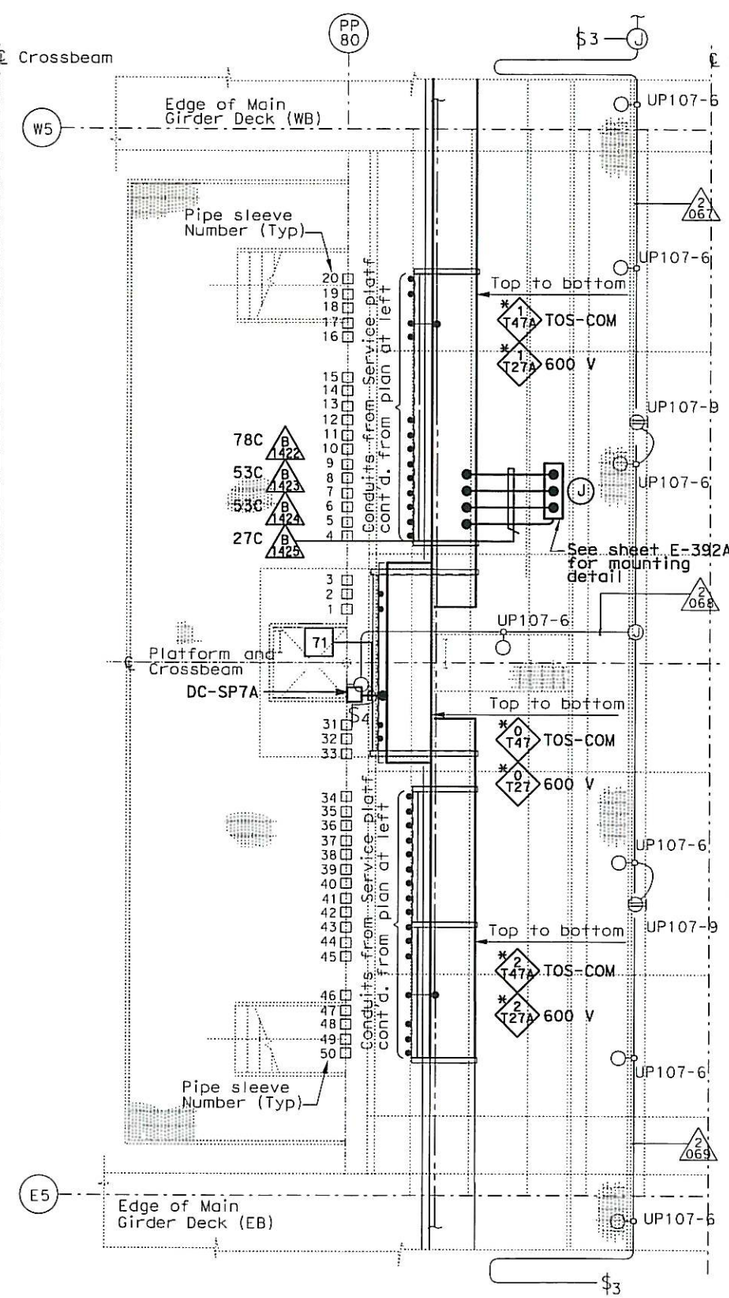

CABLE TRAY AND CONDUIT PLAN INSIDE CROSSBEAM

SCALE 1:40

EQUIPMENT SCHEDULE:

Equipment for Westbound

- (A) (E) Utility Panel, UP-107, 100A 208/120 V, 3-phase, 4-wire
- (A1) (E) Main Breaker for UP-107 (Nema 4X)
- (A2) (E) 15 kVA Transformer, 3 phase, 60 hz 480 V-208/120 V, 3 phase (Nema 4x)
- (C) (E) Controller Cabinet #TOS-7WA.
- (L) (E) TOS/COM-7WA Pull Box (PB-2B)

Equipment for Eastbound

- *(D) **(E) Utility Panel, UP-207, 100A, MLO 208/120 V, 3-phase, 4-wire**
- (D1) (E) Main Breaker for (D2) (Nema 4X)
- (D2) (E) 15 kVA Transformer, 3 phase, 60 hz 480 V-208/120 V, 3 phase (Nema 4X)
- (D3) (E) Enclosed circuit breaker 10 kAIC 240 V 3 phase in NEMA 4X enclosure.
- (E) (E) Lighting Panel LP-222, 100A MLO 208/120 V, 3-phase, 4-wire
- (E1) (E) Main Breaker for (E2) (Nema 4X)
- (E2) (E) 15 kVA Transformer, 3 phase, 60 hz 480 V-208/120 V, 3 phase (Nema 4X)
- (E3) (E) Enclosed circuit breaker 10 kAIC 240 V 3 phase in NEMA 4X enclosure.
- (F) (E) Controller Cabinet #TOS-7EA.
- (M) (E) TOS/COM-7EA Pull Box (PB-2B)

Equipment Common for Westbound/Eastbound

- (G) (E) Telephone Terminal Box #TEL-7 (PB-7C)
- (H) (E) Communication Terminal Box #COM-7 (PB-7B)
- (J) **Base Camera Transition Panel #BCTP-SP7A 914 H x 762 W x 254 D**

SHEET NOTES:

(1) Extend conduit to 2T7EA.

NOTES:

1. References:
   - For circuit and conduit/cable tray schedules, see sheets starting at E-400 series.
   - For cable block riser diagram, see sheets E-391C thru E-391N.
   - For typical camera and motion sensor details and conduit connections, see sheet E-391Z.
   - For UP-207 Panel Schedule see sheet E-388H.

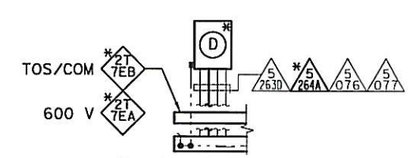

SECTION A-A

SCALE 1:40

REQUEST FOR INFORMATION NOT ADDRESSED IN THIS CCO REMAIN IN FORCE

MARK	DATE	DESCRIPTIONS	BY	CH'D	CCO#
0	12/18/12	Install Base CCTV System	RSB JH	RG	150S1

REVISIONS

CONTRACT CHANGE ORDER NO. 150 S1
SHEET 29 OF 86

DETAILS
SAS SUPERSTRUCTURE ROADWAY WESTBOUND PLATFORM 7 ARRANGEMENT (BASE CCTV SYSTEM)

SCALE AS NOTED

E-386M

REVISED BY	DATE REVISED

CALCULATED/DESIGNED BY	DATE 11/12
CHECKED BY	RG 11/12

DESIGN OVERSIGHT: JH
BEHZAD GOLEMOHAMMADI

STATE OF CALIFORNIA - DEPARTMENT OF TRANSPORTATION
Caltrans

THIS PLAN ACCURATE FOR ELECTRICAL WORK ONLY.

ALL DIMENSIONS ARE IN MILLIMETERS UNLESS OTHERWISE SHOWN.

FOR REDUCED PLANS ORIGINAL SCALE IS IN MILLIMETERS 0 20 40 60 80

DGN FILE =>04-0120f1_0350S15.dgn
USERNAME =>Llorico

CU 04251 | EA 0120F1

LAST REVISION 00-00-00
DATE PLOTTED => 18-DEC-2012
TIME PLOTTED => 17:25

DIST	COUNTY	ROUTE	KILOMETER POST TOTAL PROJECT	SHEET No	TOTAL SHEETS
04	SF	80	13.2/13.9	350 S16	1204

11/26/12
REGISTERED ELECTRICAL ENGINEER DATE

11-29-12
PLANS APPROVAL DATE

REGISTERED PROFESSIONAL ENGINEER DAVID H. OTO No. 10699 Exp. 06/30/2013 ELECTRICAL STATE OF CALIFORNIA

PB AMERICAS, Inc.
A Parsons Brinckerhoff Company
303 Second St., Suite 700N
San Francisco, CA 94107-1317

The State of California or its officers or agents shall not be responsible for the accuracy or completeness of electronic copies of this plan sheet.

Caltrans now has a web site! To get to the web site, go to http://www.dot.ca.gov

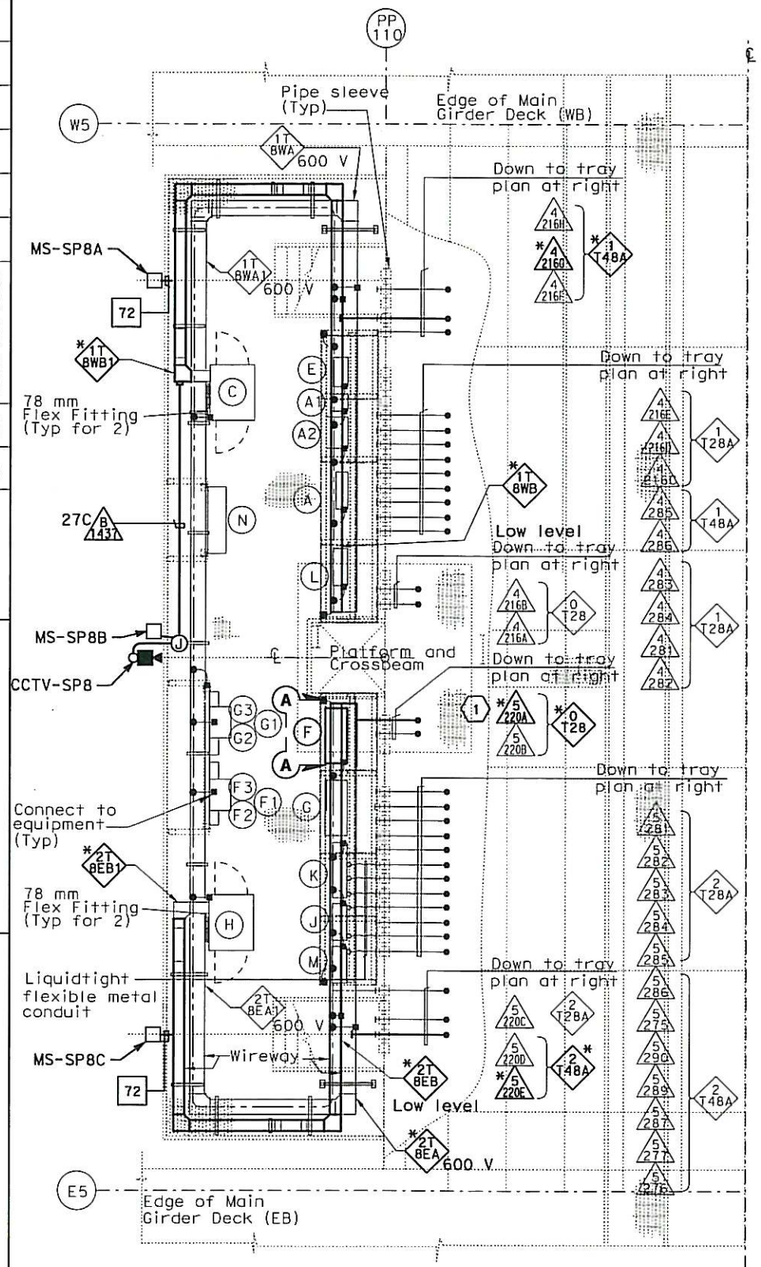

WIREWAY AND CONDUIT PLAN AT SERVICE PLATFORM

SCALE 1:40

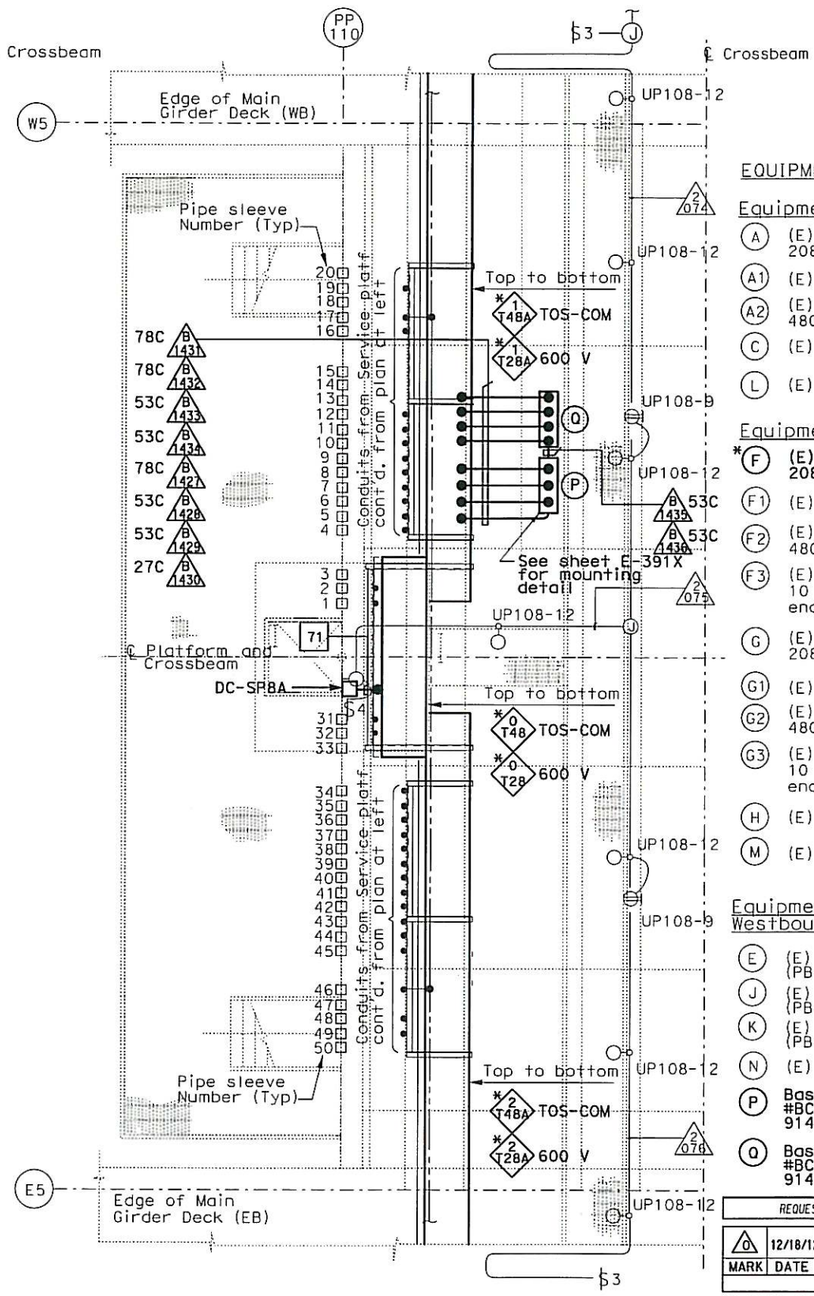

CABLE TRAY AND CONDUIT PLAN INSIDE CROSSBEAM

SCALE 1:40

EQUIPMENT SCHEDULE:

Equipment for Westbound

- (A) (E) Utility Panel, UP-108, 100A 208/120 V, 3-phase, 4-wire
- (A1) (E) 480 V Breaker for (A2) (Nema 4X)
- (A2) (E) 15 kVA Transformer, 3 phase, 60 hz 480 V-208/120 V, 3 phase (Nema 4X)
- (C) (E) Remote Terminal Unit RTU #11W
- (L) (E) TOS/COM-8WA Pull Box (PB-2B)

Equipment for Eastbound

- *(F) **(E) Utility Panel, UP-208, 100 A, MLO 208/120 V, 3-phase, 4-wire**
- (F1) (E) 480 V Breaker for (F2) (Nema 4X)
- (F2) (E) 15 kVA Transformer, 3 phase, 60 hz 480 V-208/120 V, 3 phase (Nema 4X)
- (F3) (E) Enclosed circuit breaker 10 kAIC 240 V 3 phase in NEMA 4X enclosure.
- (G) (E) Lighting Panel LP-223, 100 A, MLO 208/120 V, 3-phase, 4-wire
- (G1) (E) 480 V Breaker for (G2) (Nema 4X)
- (G2) (E) 15 kVA Transformer, 3 phase, 60 hz 480 V-208/120 V, 3 phase (Nema 4X)
- (G3) (E) Enclosed circuit breaker 10 kAIC 240 V 3 phase in NEMA 4X enclosure.
- (H) (E) Remote Terminal Unit RTU #11E
- (M) (E) TOS/COM-8EA Pull Box (PB-2B)

Equipment Common for Westbound/Eastbound

- (E) (E) Navigation Relay Cabinet NAP-8 (PB-6C)
- (J) (E) Telephone Terminal Box #TEL-8 (PB-7C)
- (K) (E) Communication Terminal Box COM-8 (PB-7B)
- (N) (E) Fog Detection Panel FDP-6
- (P) Base Camera Transition Panel #BCTP-SP8A 914 H x 762 W x 254 D
- (Q) Base Camera Transition Panel #BCTP-SP8B 914 H x 762 W x 254 D

SHEET NOTES:

(1) Extend conduit to 2T8EA.

NOTES:

1. References:
   - For circuit and conduit/cable tray schedules, see sheets starting at E-400 series.
   - For cable block riser diagram, see sheets E-391C thru E-391N.
   - For typical camera and motion sensor details and conduit connections, see sheet E-391Z.
   - For UP-208 Panel Schedule see sheet E-388H.

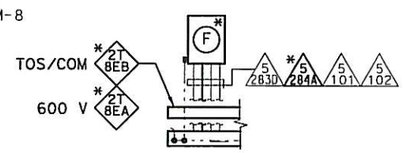

SECTION A-A

SCALE 1:40

REQUEST FOR INFORMATION NOT ADDRESSED IN THIS CCO REMAIN IN FORCE

MARK	DATE	DESCRIPTIONS	BY	CH'D	CCO#
0	12/18/12	Install Base CCTV System	RSB JH	RG	150S1

REVISIONS

CONTRACT CHANGE ORDER NO. 150 S1
SHEET 30 OF 86

DETAILS
SAS SUPERSTRUCTURE ROADWAY WESTBOUND PLATFORM 8 ARRANGEMENT (BASE CCTV SYSTEM)

SCALE AS NOTED

E-386N

STATE OF CALIFORNIA - DEPARTMENT OF TRANSPORTATION
Caltrans

DESIGN OVERSIGHT: BEHZAD GOLEMOHAMMADI

CALCULATED/ DESIGNED BY	JH	DATE 11/12	REVISED BY	DATE REVISED
CHECKED BY	RG	11/12		

THIS PLAN ACCURATE FOR ELECTRICAL WORK ONLY.

ALL DIMENSIONS ARE IN MILLIMETERS UNLESS OTHERWISE SHOWN.

FOR REDUCED PLANS ORIGINAL SCALE IS IN MILLIMETERS 0 20 40 60 80

DGN FILE =>04-0120F1_0350S16.dgn
USERNAME =>Llorico

CU 04251 | EA 0120F1

LAST REVISION 00-00-00 | DATE PLOTTED => 18-DEC-2012 | TIME PLOTTED => 17:25

DIST	COUNTY	ROUTE	KILOMETER POST TOTAL PROJECT	SHEET No	TOTAL SHEETS
04	SF	80	13.2/13.9	350 S17	1204

11/26/12
REGISTERED ELECTRICAL ENGINEER DATE

11-29-12
PLANS APPROVAL DATE

REGISTERED PROFESSIONAL ENGINEER DAVID H. OTO No. 10699 Exp. 06/30/2013 ELECTRICAL STATE OF CALIFORNIA

PB AMERICAS, Inc.
A Parsons Brinckerhoff Company
303 Second St., Suite 700N
San Francisco, CA 94107-1317

The State of California or its officers or agents shall not be responsible for the accuracy or completeness of electronic copies of this plan sheet.

Caltrans now has a web site! To get to the web site, go to http://www.dot.ca.gov

Caltrans Metric

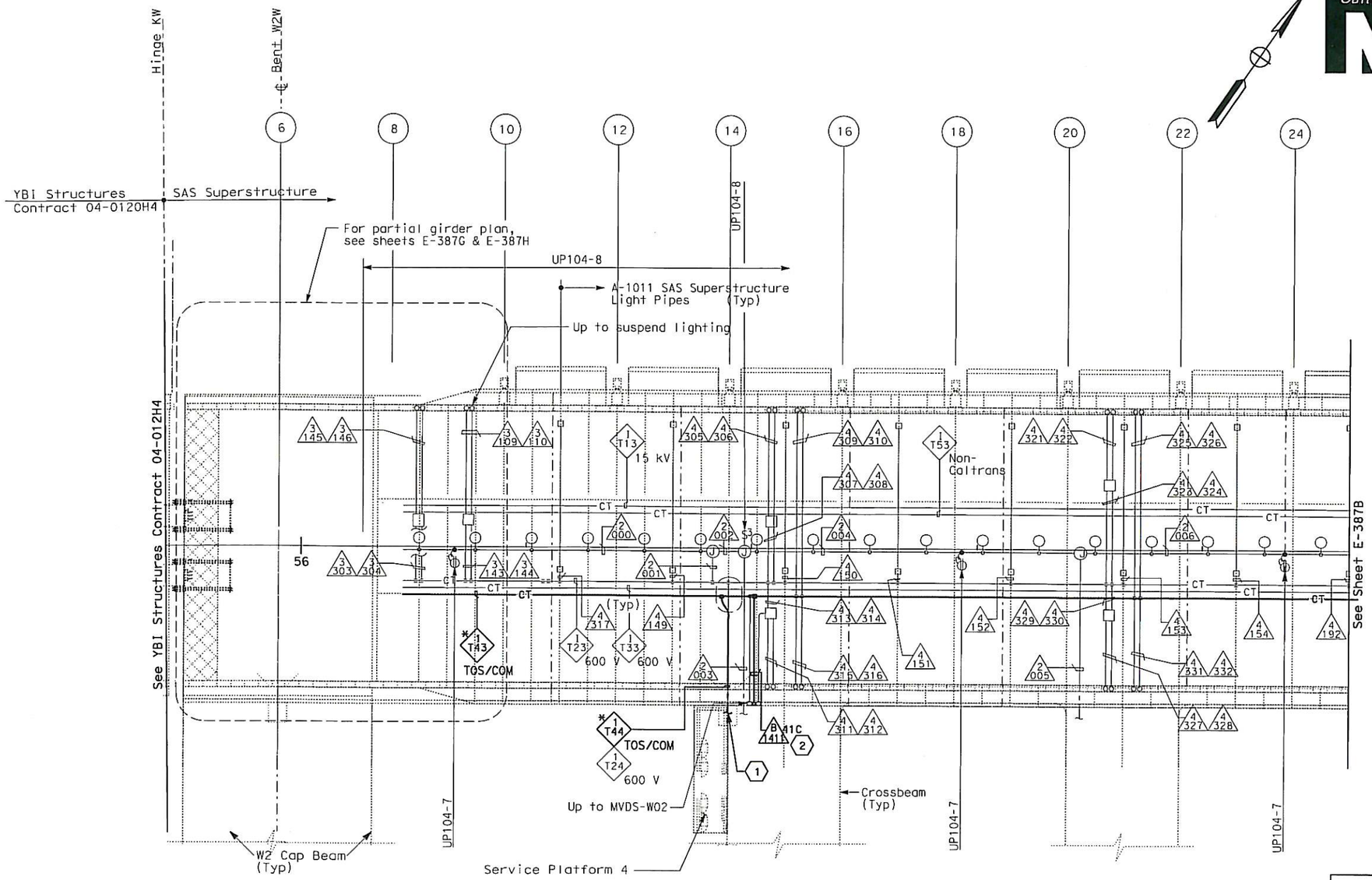

CONDUIT PLAN

SHEET NOTES:

(1) For continuation, see sheet E-387J.

(2) For continuation, see sheet E-386A.

NOTES:

1. Reference:
   - For circuit and conduit/cable tray schedules, see sheet starting at E-400 series.
   - For cable block riser diagram, see sheets E-391C thru E-391N.

REQUEST FOR INFORMATION NOT ADDRESSED IN THIS CCO REMAIN IN FORCE

MARK	DATE	DESCRIPTIONS	BY	CH'D	CCO#
0	12/18/12	Install Base CCTV System	RSB JH	RG	150S1

REVISIONS

CONTRACT CHANGE ORDER NO. 150 S1
SHEET 31 OF 86

SAS SUPERSTRUCTURE GIRDER WESTBOUND
(BASE CCTV SYSTEM)

SCALE: 1:200

E-387A

DATE	REVISED BY	CALCULATED/ DESIGNED BY	DESIGN OVERSIGHT
11/12	DATE REVISED	JH	BEHZAD GOLEMOHAMMADI
11/12		RG	
		CHECKED BY	

STATE OF CALIFORNIA - DEPARTMENT OF TRANSPORTATION
Caltrans

THIS PLAN ACCURATE FOR ELECTRICAL WORK ONLY.

ALL DIMENSIONS ARE IN METERS UNLESS OTHERWISE SHOWN

FOR REDUCED PLANS ORIGINAL SCALE IS IN MILLIMETERS 0 20 40 60 80

DGN FILE =>04-0120f1_0350S17.dgn
USERNAME =>Llorico

CU 04251

EA 0120F1

LAST REVISION 00-00-00

DATE PLOTTED => 18-DEC-2012
TIME PLOTTED => 17:25

DIST	COUNTY	ROUTE	KILOMETER POST TOTAL PROJECT	SHEET No	TOTAL SHEETS
04	SF	80	13.2/13.9	350 S18	1204

REGISTERED ELECTRICAL ENGINEER 11/26/12 DATE

PLANS APPROVAL DATE 11-29-12

REGISTERED PROFESSIONAL ENGINEER DAVID H. OTO No. 10699 Exp. 06/30/2013 ELECTRICAL STATE OF CALIFORNIA

PB AMERICAS, Inc.
A Parsons Brinckerhoff Company
303 Second St., Suite 700N
San Francisco, CA 94107-1317

The State of California or its officers or agents shall not be responsible for the accuracy or completeness of electronic copies of this plan sheet.

Caltrans now has a web site! To get to the web site, go to http://www.dot.ca.gov

Caltrans Metric

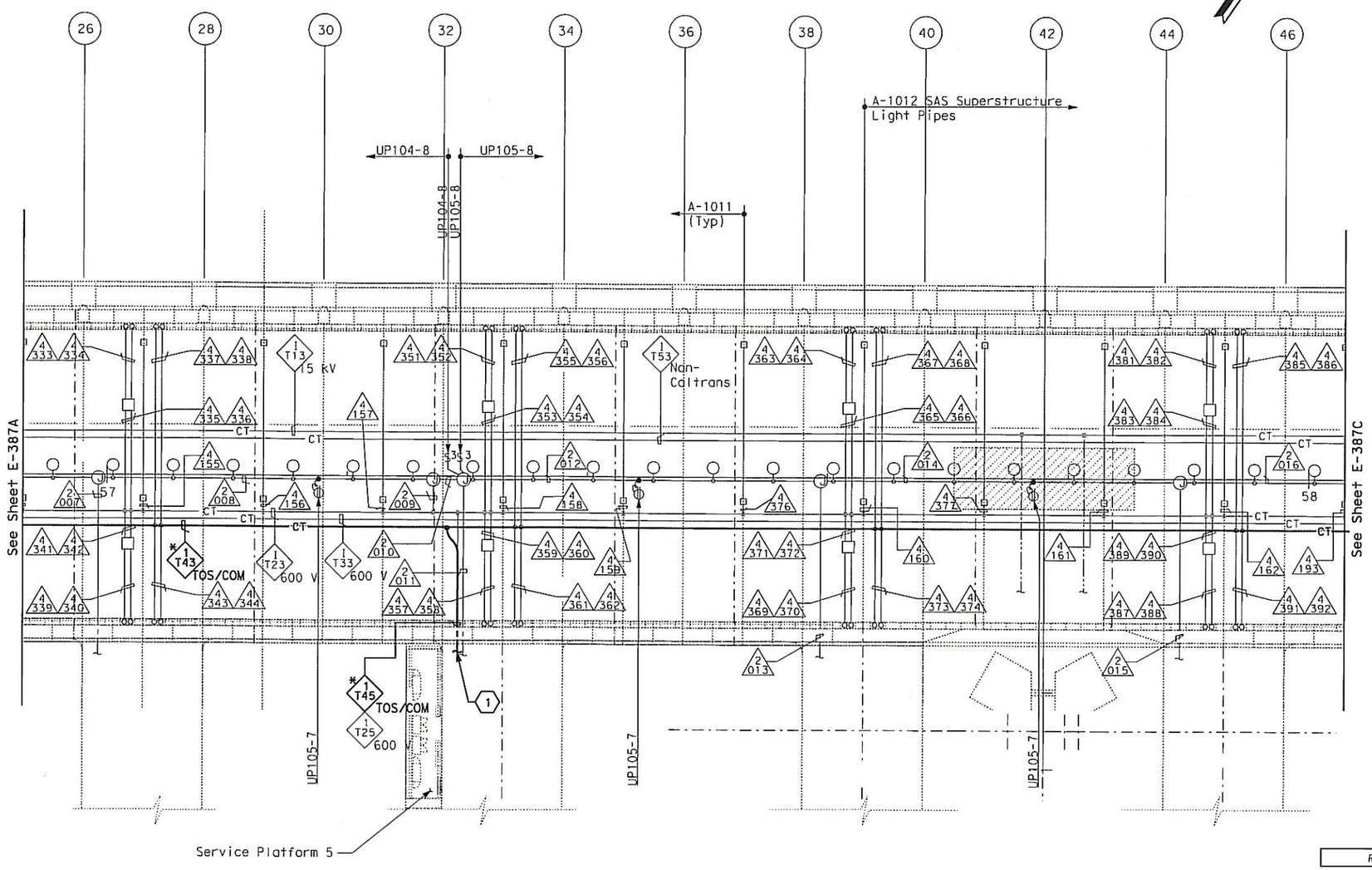

SHEET NOTES:

(1) For continuation, see sheet E-387K.

NOTES:

1. Reference:
   - For circuit and conduit/cable tray schedules, see sheet starting at E-400 series.
   - For cable block riser diagram, see sheets E-391C thru E-391N.

REQUEST FOR INFORMATION NOT ADDRESSED IN THIS CCO REMAIN IN FORCE					
0	12/18/12	Install Base CCTV System	JH	RG	150S1
MARK	DATE	DESCRIPTIONS	BY	CH'D	CCO#
		REVISIONS			

CONTRACT CHANGE ORDER NO. 150 S1
SHEET 32 OF 86

SAS SUPERSTRUCTURE GIRDER WESTBOUND
(BASE CCTV SYSTEM)
SCALE: 1:200

E-387B

DATE	REVISED BY	DATE	REVISED
JH	11/12	RG	11/12

CALCULATED/DESIGNED BY JH
CHECKED BY RG

DESIGN OVERSIGHT
BEHZAD GOLEMOHAMMADI

UNCHECKED - DRAFT

STATE OF CALIFORNIA - DEPARTMENT OF TRANSPORTATION
Caltrans

THIS PLAN ACCURATE FOR ELECTRICAL WORK ONLY.

ALL DIMENSIONS ARE IN METERS UNLESS OTHERWISE SHOWN

FOR REDUCED PLANS ORIGINAL SCALE IS IN MILLIMETERS 0 20 40 60 80

DGN FILE =>04-0120f1_0350S18.dgn
USERNAME =>Llorico

CU 04251

EA 0120F1

LAST REVISION 00-00-00
DATE PLOTTED => 18-DEC-2012
TIME PLOTTED => 17:25

DIST	COUNTY	ROUTE	KILOMETER POST TOTAL PROJECT	SHEET No	TOTAL SHEETS
04	SF	80	13.2/13.9	350 S19	1204

REGISTERED ELECTRICAL ENGINEER 11/26/12 DATE

PLANS APPROVAL DATE 11-29-12

REGISTERED PROFESSIONAL ENGINEER DAVID H. OTO No. 10699 Exp. 06/30/2013 ELECTRICAL STATE OF CALIFORNIA

PB AMERICAS, Inc.
A Parsons Brinckerhoff Company
303 Second St., Suite 700N
San Francisco, CA 94107-1317

The State of California or its officers or agents shall not be responsible for the accuracy or completeness of electronic copies of this plan sheet.

Caltrans now has a web site! To get to the web site, go to http://www.dot.ca.gov

Caltrans Metric

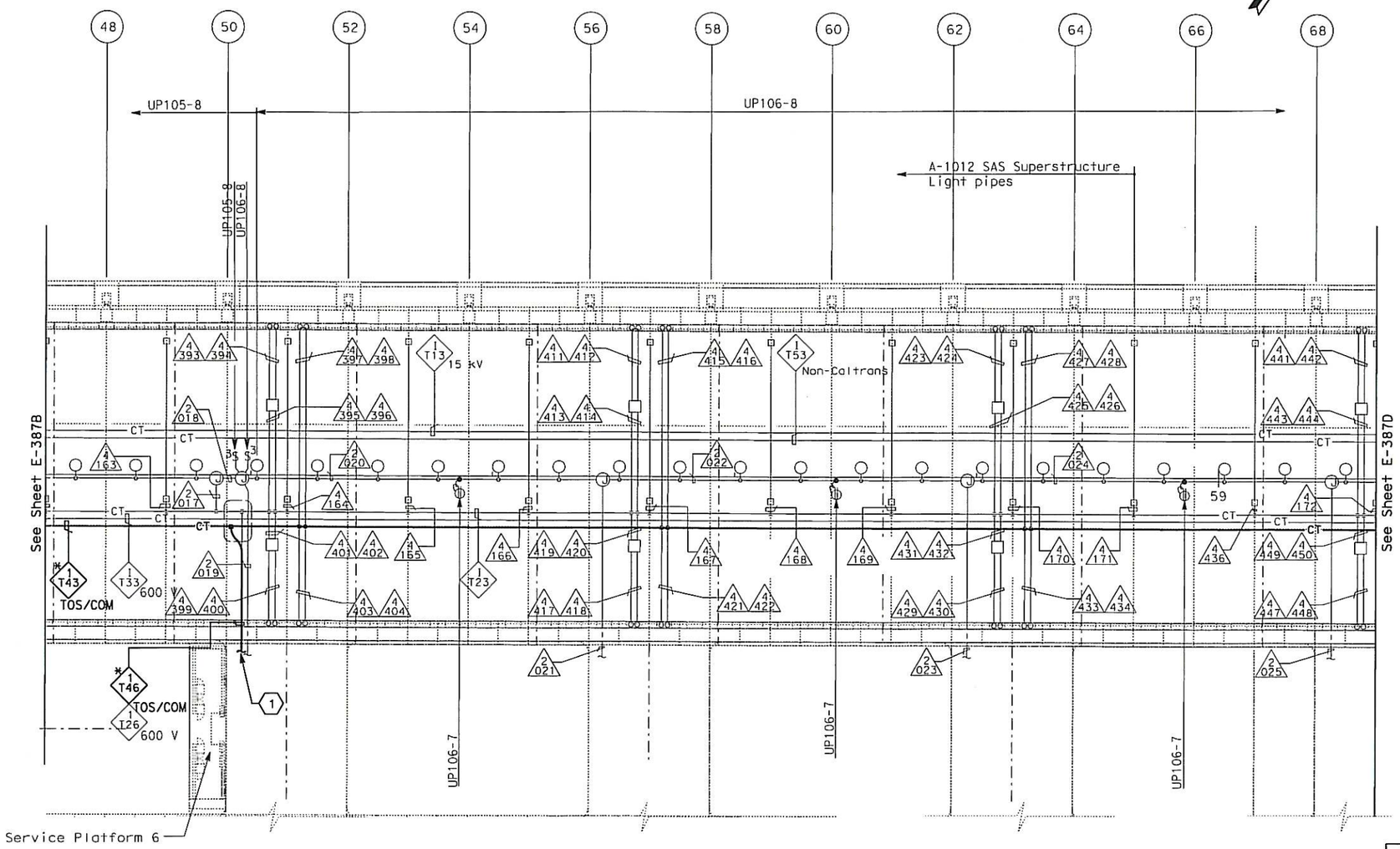

SHEET NOTES:

(1) For continuation, see sheet E-387K.

NOTES:

1. Reference:
   - For circuit and conduit/cable tray schedules, see sheet starting at E-400 series.
   - For cable block riser diagram, see sheets E-391C thru E-391N.

REQUEST FOR INFORMATION NOT ADDRESSED IN THIS CCO REMAIN IN FORCE

MARK	DATE	DESCRIPTIONS	BY	CH'D	CCO#
0	12/18/12	Install Base CCTV System	JH	RG	150S1

REVISIONS

CONTRACT CHANGE ORDER NO. 150 S1
SHEET 33 OF 86

SAS SUPERSTRUCTURE GIRDER WESTBOUND
(BASE CCTV SYSTEM)

SCALE: 1:200

E-387C

DATE	JH	CALCULATED/ DESIGNED BY	DESIGN OVERSIGHT
11/12	RG	CHECKED BY	BEHZAD GOLEMOHAMMADI

DATE	REVISED BY
11/12	DATE REVISED

STATE OF CALIFORNIA - DEPARTMENT OF TRANSPORTATION

Caltrans

THIS PLAN ACCURATE FOR ELECTRICAL WORK ONLY.

ALL DIMENSIONS ARE IN METERS UNLESS OTHERWISE SHOWN

FOR REDUCED PLANS ORIGINAL SCALE IS IN MILLIMETERS 0 20 40 60 80

DGN FILE =>04-0120F1_0350S19.dgn
USERNAME =>Llorico

CU 04251

EA 0120F1

LAST REVISION 00-00-00

DATE PLOTTED => 18-DEC-2012
TIME PLOTTED => 17:25

DIST	COUNTY	ROUTE	KILOMETER POST TOTAL PROJECT	SHEET No	TOTAL SHEETS
04	SF	80	13.2/13.9	350 S20	1204

REGISTERED ELECTRICAL ENGINEER 11/26/12 DATE

PLANS APPROVAL DATE 11-29-12

REGISTERED PROFESSIONAL ENGINEER DAVID H. OTO No. 10699 Exp. 06/30/2013 ELECTRICAL STATE OF CALIFORNIA

PB AMERICAS, Inc.
A Parsons Brinckerhoff Company
303 Second St., Suite 700N
San Francisco, CA 94107-1317

The State of California or its officers or agents shall not be responsible for the accuracy or completeness of electronic copies of this plan sheet.

Caltrans now has a web site! To get to the web site, go to http://www.dot.ca.gov

Caltrans Metric

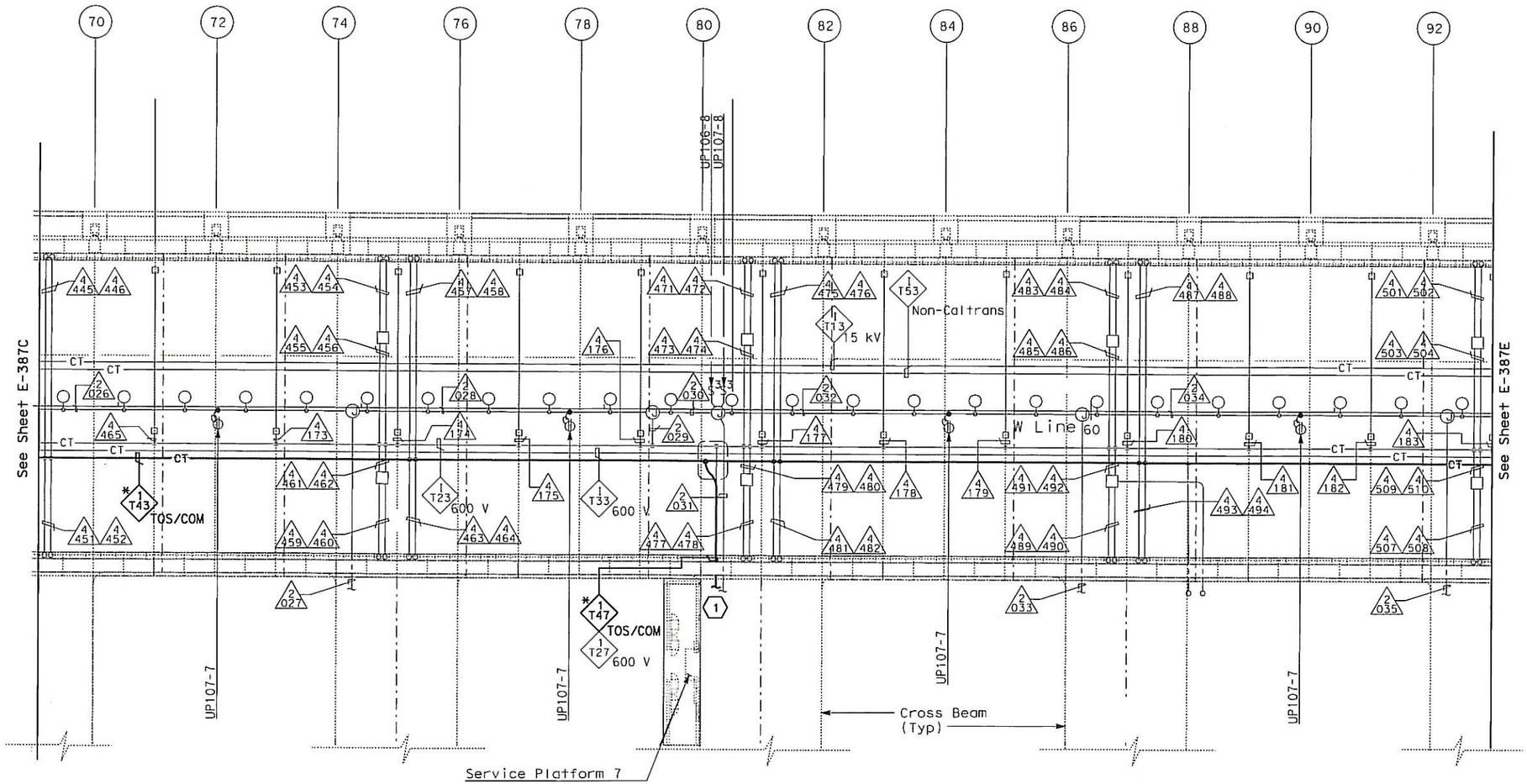

CONDUIT PLAN

SHEET NOTES:

(1) For continuation, see sheet E-387K.

NOTES:

1. Reference:
   - For circuit and conduit/cable tray schedules, see sheet starting at E-400 series.
   - For cable block riser diagram, see sheets E-391C thru E-391N.

REQUEST FOR INFORMATION NOT ADDRESSED IN THIS CCO REMAIN IN FORCE

MARK	DATE	DESCRIPTIONS	BY	CH'D	CCO#
0	12/18/12	Install Base CCTV System	JH	RG	150S1

REVISIONS

CONTRACT CHANGE ORDER NO. 150 S1
SHEET 34 OF 86

SAS SUPERSTRUCTURE GIRDER WESTBOUND
(BASE CCTV SYSTEM)

SCALE: 1:200

E-387D

THIS PLAN ACCURATE FOR ELECTRICAL WORK ONLY.

	DATE 11/12	REVISED BY	DATE REVISED
CALCULATED/DESIGNED BY	JH	RG	11/12
CHECKED BY			

DESIGN OVERSIGHT
BEHZAD GOLEMOHAMMADI

STATE OF CALIFORNIA - DEPARTMENT OF TRANSPORTATION
Caltrans

LAST REVISION 00-00-00

DATE PLOTTED => 18-DEC-2012
TIME PLOTTED => 17:25

FOR REDUCED PLANS ORIGINAL SCALE IS IN MILLIMETERS 0 20 40 60 80

DGN FILE =>04-0120f1_0350520.dgn
USERNAME =>Llorico

CU 04251

EA 0120F1

DIST	COUNTY	ROUTE	KILOMETER POST TOTAL PROJECT	SHEET No	TOTAL SHEETS
04	SF	80	13.2/13.9	350 S21	1204

REGISTERED ELECTRICAL ENGINEER 11/26/12 DATE

11-29-12
PLANS APPROVAL DATE

REGISTERED PROFESSIONAL ENGINEER DAVID H. OTO No. 10699 Exp. 06/30/2013 ELECTRICAL STATE OF CALIFORNIA

PB AMERICAS, Inc.
A Parsons Brinckerhoff Company
303 Second St., Suite 700N
San Francisco, CA 94107-1317

The State of California or its officers or agents shall not be responsible for the accuracy or completeness of electronic copies of this plan sheet.

Caltrans now has a web site! To get to the web site, go to http://www.dot.ca.gov

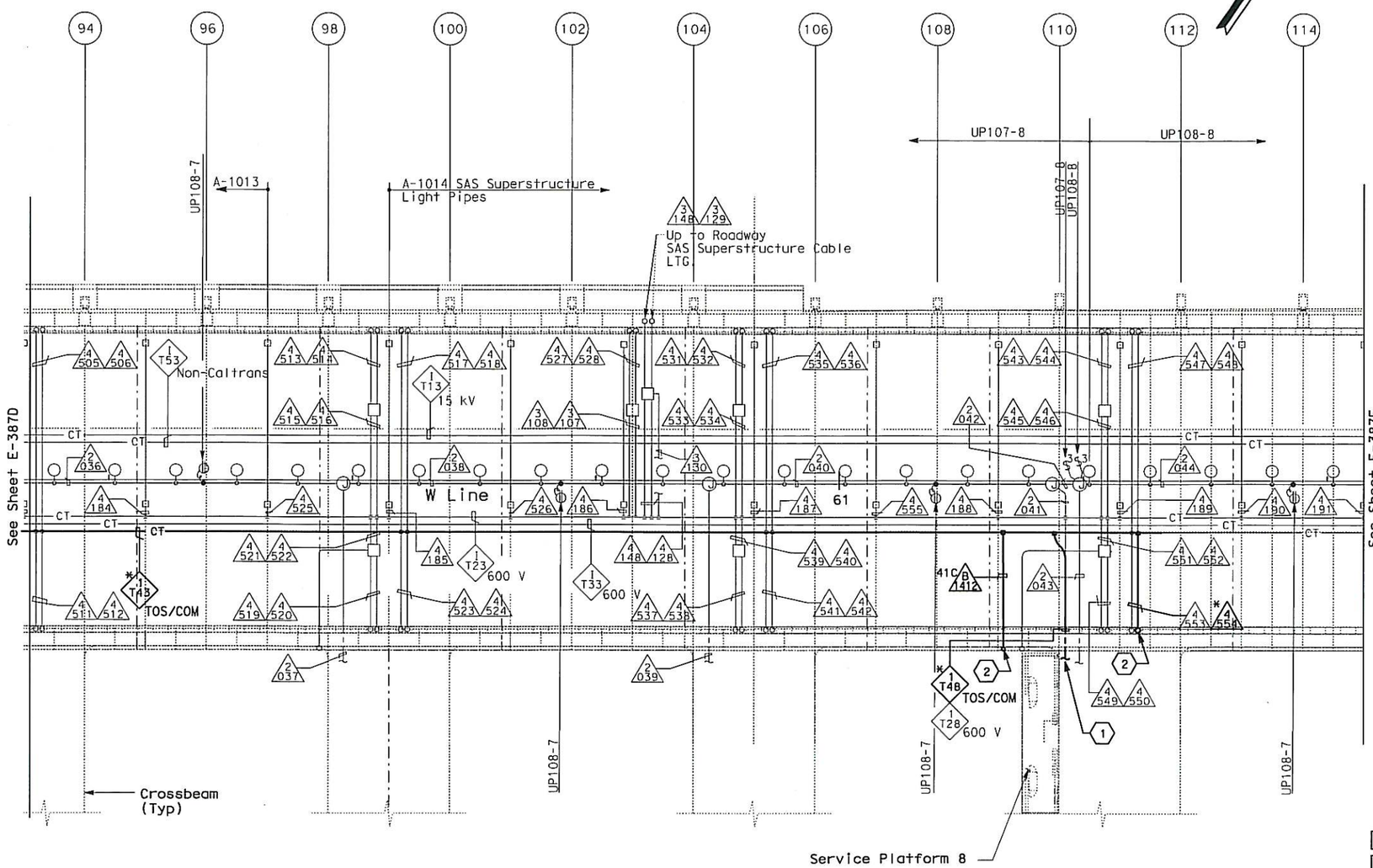

CONDUIT PLAN

SHEET NOTES:

1. For continuation, see sheet E-387K.
2. For continuation, see sheet E-386E.

NOTES:

1. Reference:
   - For circuit and conduit/cable tray schedules, see sheet starting at E-400 series.
   - For cable block riser diagram, see sheets E-391C thru E-391N.

REQUEST FOR INFORMATION NOT ADDRESSED IN THIS CCO REMAIN IN FORCE

MARK	DATE	DESCRIPTIONS	BY	CH'D	CCO#
0	12/18/12	Install Base CCTV System	RSB JH	RG	150S1

REVISIONS

CONTRACT CHANGE ORDER NO. 150 S1
SHEET 35 OF 86

SAS SUPERSTRUCTURE GIRDER WESTBOUND
(BASE CCTV SYSTEM)
SCALE: 1:200

E-387E

THIS PLAN ACCURATE FOR ELECTRICAL WORK ONLY.

STATE OF CALIFORNIA - DEPARTMENT OF TRANSPORTATION

DESIGN OVERSIGHT: BEHZAD GOLEMOHAMMADI

CALCULATED/DESIGNED BY: JH | CHECKED BY: RG | DATE 11/12 | REVISED BY | DATE REVISED

LAST REVISION 00-00-00 | DATE PLOTTED => 18-DEC-2012 | TIME PLOTTED => 17:25

FOR REDUCED PLANS ORIGINAL SCALE IS IN MILLIMETERS 0 20 40 60 80

DGN FILE =>04-0120f1_0350S21.dgn
USERNAME =>Llorico

CU 04251 | EA 0120F1

DIST	COUNTY	ROUTE	KILOMETER POST TOTAL PROJECT	SHEET No.	TOTAL SHEETS
04	SF	80	13.2/13.9	350 S23	1204

REGISTERED ELECTRICAL ENGINEER 11/26/12 DATE

11-29-12
PLANS APPROVAL DATE

REGISTERED PROFESSIONAL ENGINEER DAVID H. OTO No. 10699 Exp. 06/30/2013 ELECTRICAL STATE OF CALIFORNIA

PB AMERICAS, Inc.
A Parsons Brinckerhoff Company
303 Second St., Suite 700N
San Francisco, CA 94107-1317

The State of California or its officers or agents shall not be responsible for the accuracy or completeness of electronic copies of this plan sheet.

Caltrans now has a web site! To get to the web site, go to http://www.dot.ca.gov

Caltrans Metric

CABLE TRAY SUPPORT SCHEDULE

Item	Type	Detail Sheet	Item	Type	Detail Sheet
1	VA	E-122	6	1	AS-7
2	VB	E-122	7	2	AS-7
3	VC	E-122	8	3	AS-7
4	VD	E-122	9	4	AS-7
5	VE	E-122A	10	5	AS-7

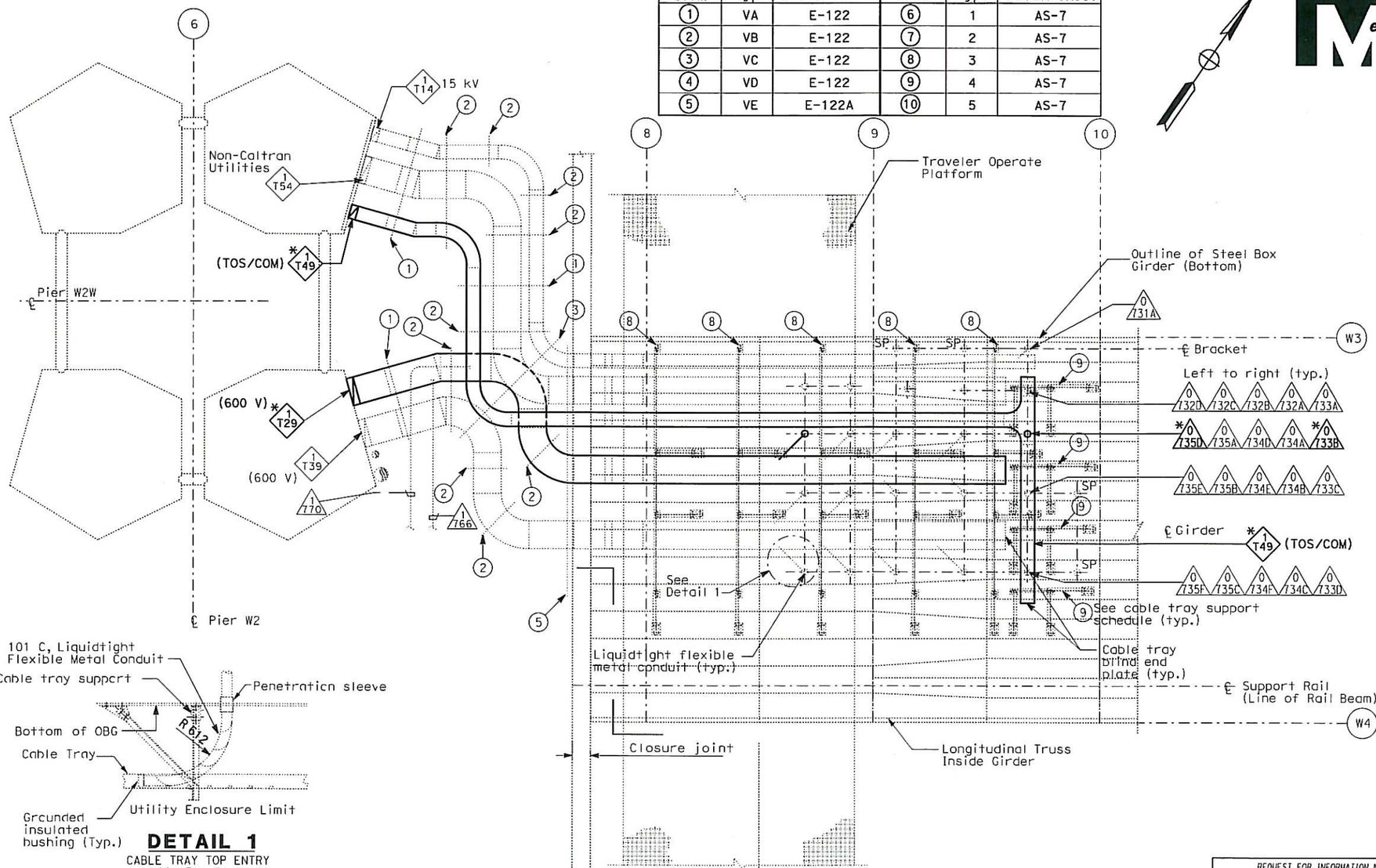

NOTES:

1. References:
   - For circuit and conduit/cable tray schedules, see sheets starting at E-400 series.
   - For cable block riser diagram, see sheets E-391C thru E-391N.

DETAIL 1
CABLE TRAY TOP ENTRY
SCALE 1:50

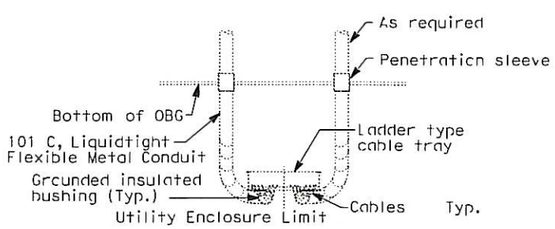

ALTERNATE
CABLE TRAY BOTTOM ENTRY
(Cable tray supports not shown for clarity)
SCALE 1:50

PARTIAL GIRDER PLAN
BASE LAYOUT
SCALE 1:50

REQUEST FOR INFORMATION NOT ADDRESSED IN THIS CCO REMAIN IN FORCE

MARK	DATE	DESCRIPTIONS	BY	CH'D	CCO#
0	12/18/12	Install Base CCTV System	JH	RG	150S1
		REVISIONS			

CONTRACT CHANGE ORDER NO. 150 S1
SHEET 36 OF 86

DETAILS
SAS SUPERSTRUCTURE GIRDER WESTBOUND TYPICAL TRAY AND CONDUIT INSTALLATION AT PIER W2W (BASE CCTV SYSTEM)
SCALE AS NOTED

E-387G

THIS PLAN ACCURATE FOR ELECTRICAL WORK ONLY.

ALL DIMENSIONS ARE IN MILLIMETERS UNLESS OTHERWISE SHOWN

FOR REDUCED PLANS ORIGINAL SCALE IS IN MILLIMETERS 0 20 40 60 80

DGN FILE =>04-0120f1_0350S23.dgn
USERNAME =>Llorico

CU 04251 | EA 0120F1

STATE OF CALIFORNIA - DEPARTMENT OF TRANSPORTATION
Caltrans

DESIGN OVERSIGHT: BEHZAD GOLEMOHAMMADI

CALCULATED/DESIGNED BY: JH | DATE: 11/12 | REVISED BY
CHECKED BY: RG | 11/12 | DATE REVISED

LAST REVISION 00-00-00

DATE PLOTTED => 18-DEC-2012
TIME PLOTTED => 17:25

DIST	COUNTY	ROUTE	KILOMETER POST TOTAL PROJECT	SHEET No	TOTAL SHEETS
04	SF	80	13.2/13.9	350 S24	1204

Caltrans Metric

REGISTERED ELECTRICAL ENGINEER 11/26/12 DATE

PLANS APPROVAL DATE 11-29-12

REGISTERED PROFESSIONAL ENGINEER DAVID H. OTO No. 10699 Exp. 06/30/2013 ELECTRICAL STATE OF CALIFORNIA

PB AMERICAS, Inc.
A Parsons Brinckerhoff Company
303 Second St., Suite 700N
San Francisco, CA 94107-1317

The State of California or its officers or agents shall not be responsible for the accuracy or completeness of electronic copies of this plan sheet.

Caltrans now has a web site! To get to the web site, go to http://www.dot.ca.gov

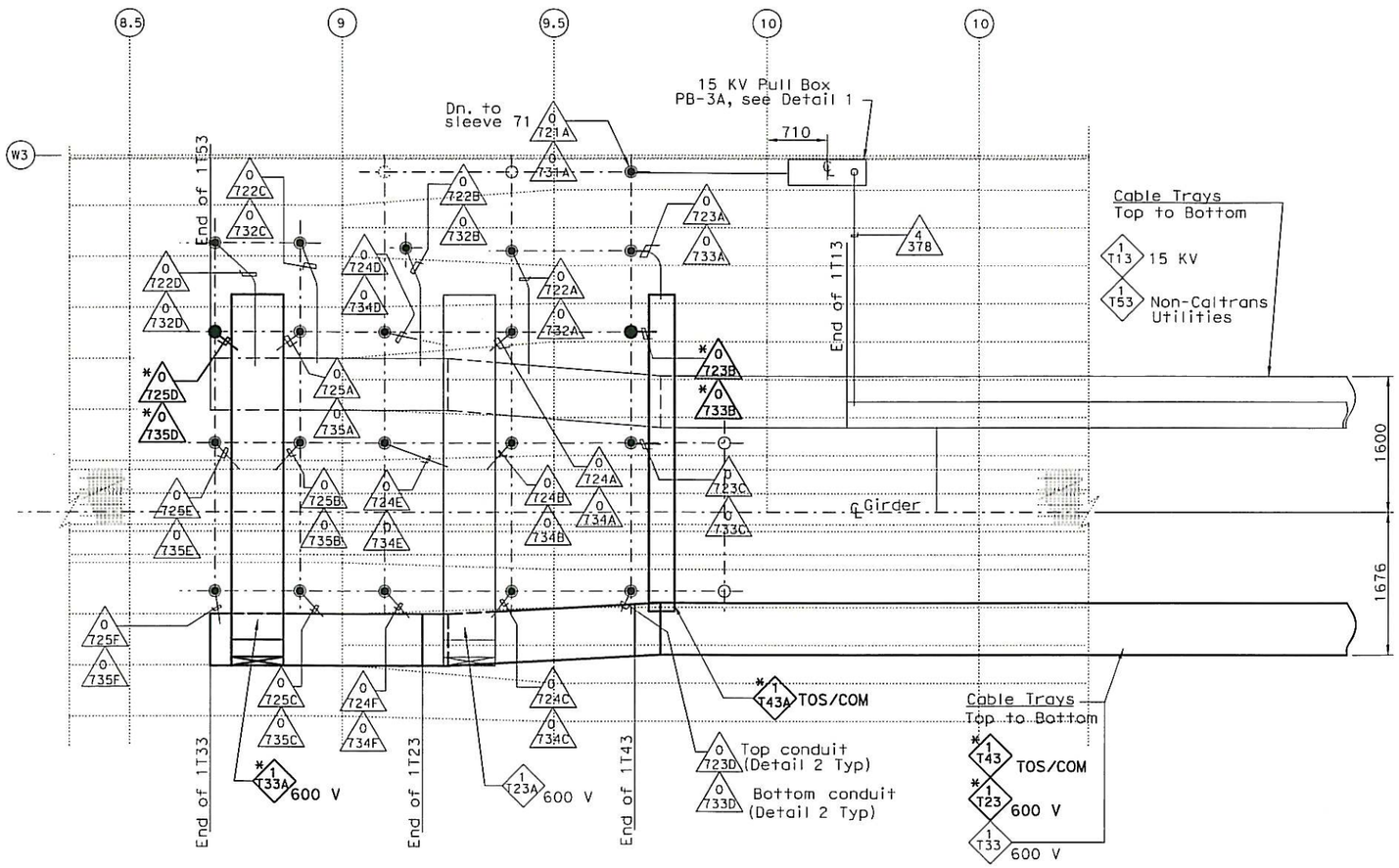

PARTIAL GIRDER BASE-PLAN
SCALE 1:150

NOTES:

1. References:
   - -For circuit and conduit/cable tray schedules, see sheets starting at E-400 series
   - -For cable block riser diagram, see sheets E-391C thru E-391N.

REQUEST FOR INFORMATION NOT ADDRESSED IN THIS CCO REMAIN IN FORCE					
0	12/18/12	Install Base CCTV System	JH	RG	150S1
MARK	DATE	DESCRIPTIONS	BY	CH'D	CCO#
		REVISIONS			

CONTRACT CHANGE ORDER NO. 150 S1
SHEET 37 OF 86

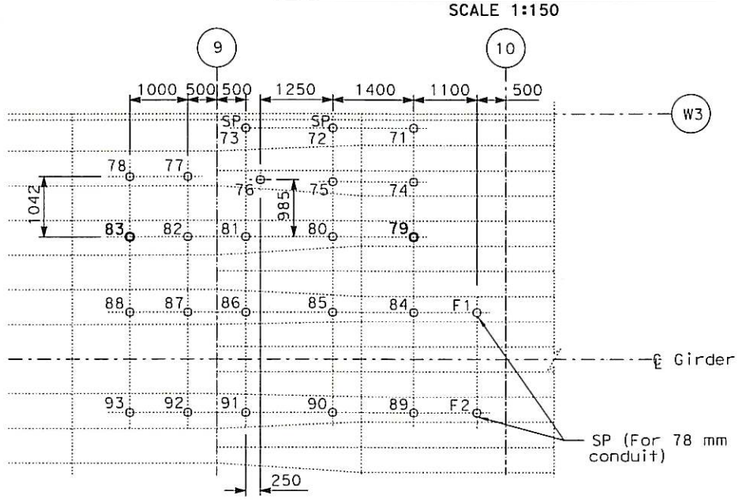

PIPE SLEEVE LOCATION-PLAN
SCALE 1:100

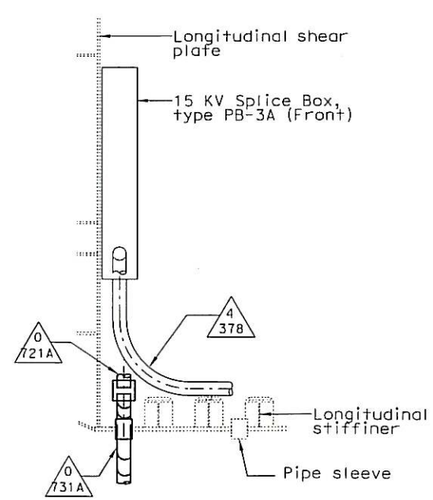

DETAIL 1
SCALE 1:50

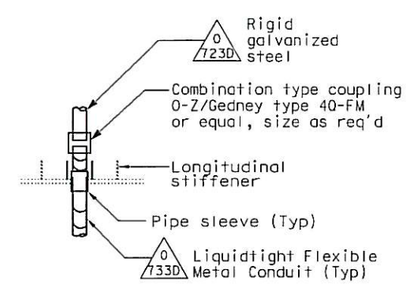

DETAIL 2
SCALE 1:50

DETAILS
SAS SUPERSTRUCTURE GIRDER WESTBOUND CABLE TRAY AND CONDUIT AT PIER W2W (BASE CCTV SYSTEM)
SCALE AS NOTED

THIS PLAN ACCURATE FOR ELECTRICAL WORK ONLY.

E-387H

STATE OF CALIFORNIA - DEPARTMENT OF TRANSPORTATION
Caltrans

DESIGN OVERSIGHT: BEHZAD GOLEMOHAMMADI

CALCULATED/DESIGNED BY: JH | DATE 11/12 | REVISED BY
CHECKED BY: RG | 11/12 | DATE REVISED

LAST REVISION 00-00-00 | DATE PLOTTED => 18-DEC-2012 | TIME PLOTTED => 17:25

FOR REDUCED PLANS ORIGINAL SCALE IS IN MILLIMETERS 0 20 40 60 80

DGN FILE =>04-0120f1_0350S24.dgn
USERNAME =>Llorico

CU 04251 | EA 0120F1

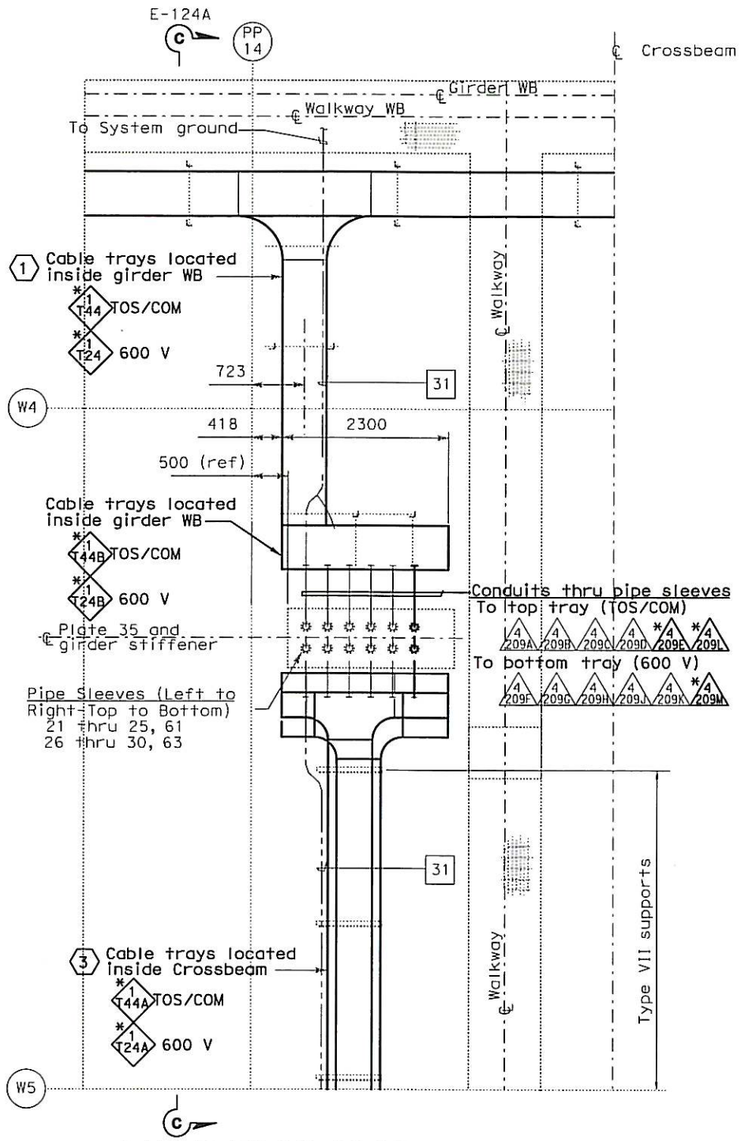

CABLE TRAY PLAN - DETAIL 4

SCALE 1:40

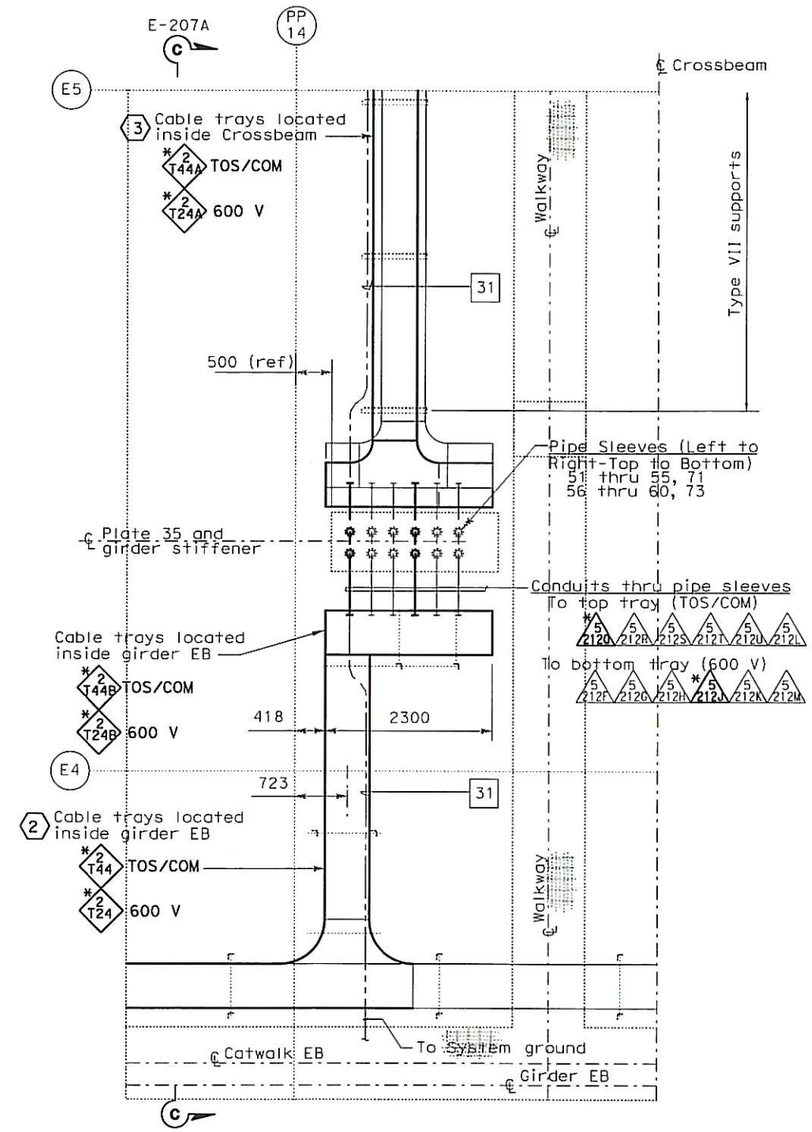

CABLE TRAY PLAN - DETAIL 5

SCALE 1:40

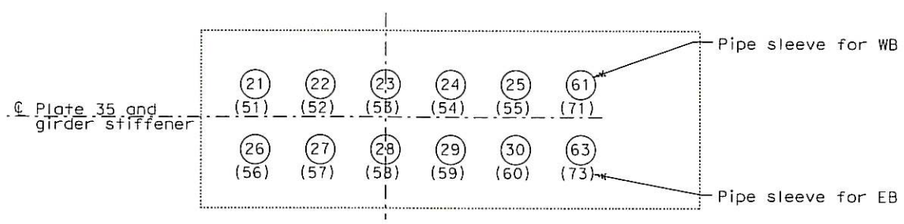

PIPE SLEEVE LOCATION

NO SCALE

THIS PLAN ACCURATE FOR ELECTRICAL WORK ONLY.

Caltrans Metric

DIST	COUNTY	ROUTE	KILOMETER POST TOTAL PROJECT	SHEET No	TOTAL SHEETS
04	SF	80	13.2/13.9	350 S25	1204

REGISTERED ELECTRICAL ENGINEER 11/26/12 DATE

11-29-12
PLANS APPROVAL DATE

REGISTERED PROFESSIONAL ENGINEER DAVID H. OTO No. 10699 Exp. 06/30/2013 ELECTRICAL STATE OF CALIFORNIA

PB AMERICAS, Inc.
A Parsons Brinckerhoff Company
303 Second St., Suite 700N
San Francisco, CA 94107-1317

The State of California or its officers or agents shall not be responsible for the accuracy or completeness of electronic copies of this plan sheet.

Caltrans now has a web site! To get to the web site, go to http://www.dot.ca.gov

SHEET NOTES:

1. For continuation inside WB girder, see sheet E-387A.
2. For continuation inside EB girder, see sheet E-389A.
3. For continuation inside Crossbeam, see sheets E-386J.

NOTES:

1. Reference:
   - For circuit, conduit/cable tray schedules, see sheets starting at E-400 series.
   - For cable block riser diagram, see sheets E-391C thru E-391N.

MARK	DATE	DESCRIPTIONS	BY	CH'D	CCO#
0	12/18/12	Install Base CCTV System	JH	RG	150S1

REVISIONS

REQUEST FOR INFORMATION NOT ADDRESSED IN THIS CCO REMAIN IN FORCE

CONTRACT CHANGE ORDER NO. 150S1
SHEET 38 OF 86

DETAILS
SAS SUPERSTURTURE GIRDER WESTBOUND PLATFORM 4 CONDUIT AND CABLE TRAY PLAN (BASE CCTV SYSTEM)

SCALE: AS NOTED

E-387J

STATE OF CALIFORNIA - DEPARTMENT OF TRANSPORTATION
Caltrans

DESIGN OVERSIGHT: BEHZAD GOLEMOHAMMADI

CALCULATED/DESIGNED BY	JH	DATE 11/12	REVISED BY	DATE REVISED
CHECKED BY	RG	11/12		

LAST REVISION 00-00-00 | DATE PLOTTED => 18-DEC-2012 | TIME PLOTTED => 17:25

FOR REDUCED PLANS ORIGINAL SCALE IS IN MILLIMETERS 0 20 40 60 80

DGN FILE =>04-0120f1_0350S25.dgn
USERNAME =>Liorico

CU 04251 | EA 0120F1

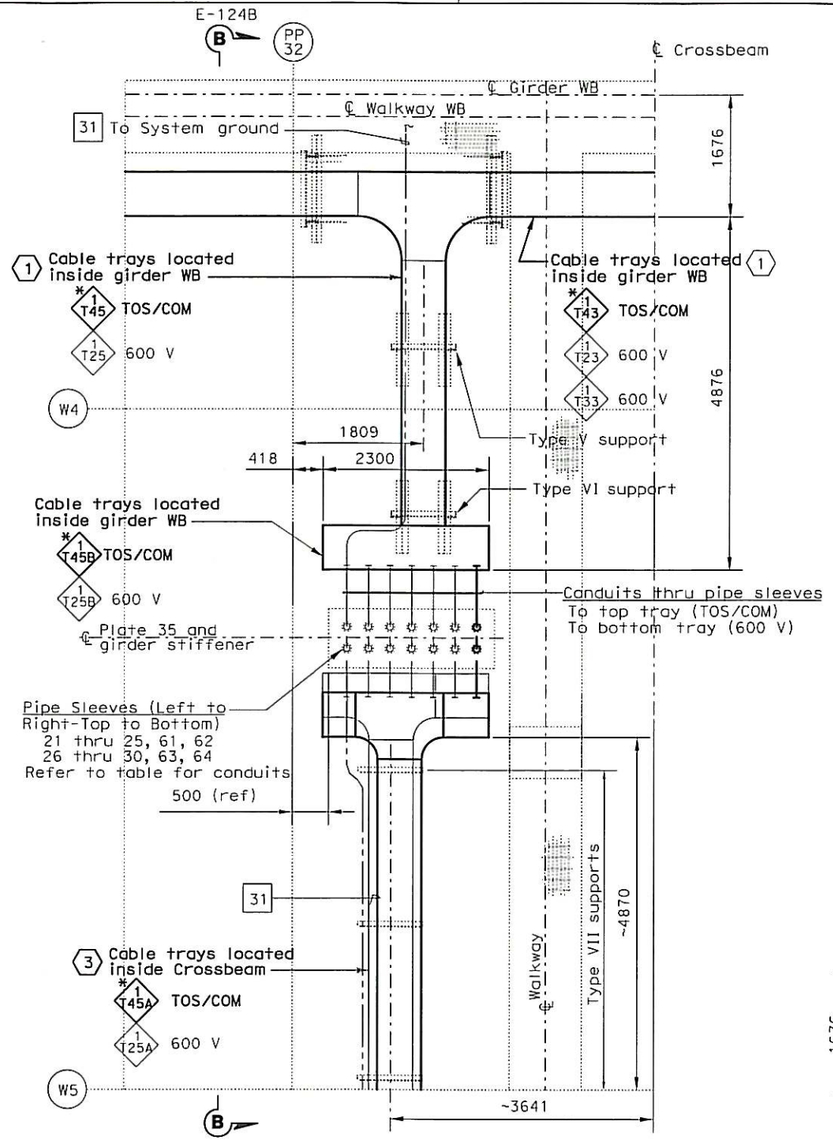

CABLE TRAY PLAN - DETAIL 4

(TYPICAL FOR PP 32, PP 50, PP 80 AND PP 110)
SCALE 1:40

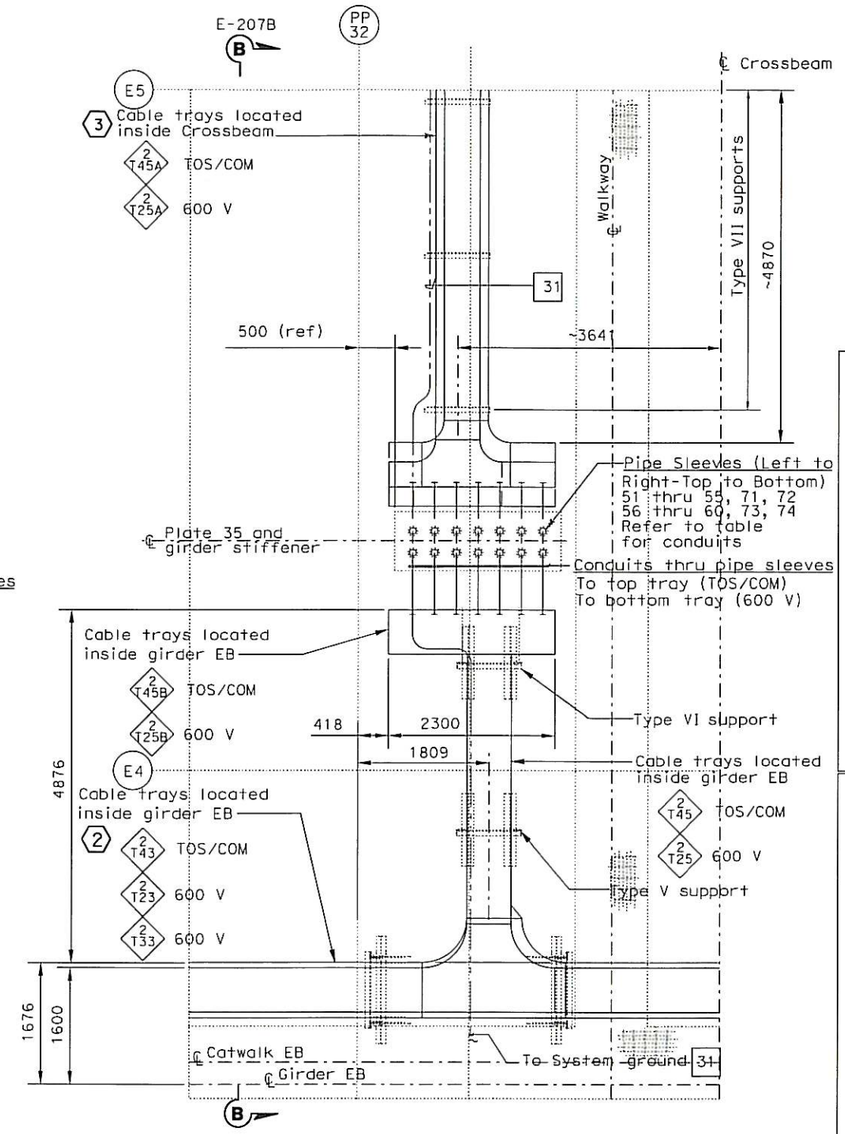

CABLE TRAY PLAN - DETAIL 5

(TYPICAL FOR PP 32, PP 50, PP 80 AND PP 110)
SCALE 1:40

DIST	COUNTY	ROUTE	KILOMETER POST TOTAL PROJECT	SHEET No	TOTAL SHEETS
04	SF	80	13.2/13.9	350 S26	1204

REGISTERED ELECTRICAL ENGINEER 11/26/12 DATE

11-29-12
PLANS APPROVAL DATE

REGISTERED PROFESSIONAL ENGINEER DAVID H. OTO No. 10699 Exp. 06/30/2013 ELECTRICAL STATE OF CALIFORNIA

PB AMERICAS, Inc.
A Parsons Brinckerhoff Company
303 Second St., Suite 700N
San Francisco, CA 94107-1317

The State of California or its officers or agents shall not be responsible for the accuracy or completeness of electronic copies of this plan sheet.

Caltrans now has a web site! To get to the web site, go to http://www.dot.ca.gov

			CONDUIT NUMBER/PIE SLEEVE	TRAY NO. FROM	TRAY NO. TO
WESTBOUND	CROSSBEAM AT PP-32	TOP	4 211A 21, 4 211B 22, 4 211C 23, 4 211D 24, 4 211E 25, 4 211L 61, *4 211M 62	*1 T45A	*1 T45B
		BOTTOM	4 211F 26, 4 211G 27, 4 211H 28, 4 211J 29, 4 211K 30, 4 211N 63, 4 211P 64	1 T25A	1 T25B
	CROSSBEAM AT PP-50	TOP	*4 213A 21, 4 213B 22, 4 213C 23, 4 213D 24, 4 213E 26, 4 213L 61, 4 213M 62	*1 T46A	*1 T46B
		BOTTOM	4 213F 26, 4 213G 27, 4 213H 28, 4 213J 29, 4 213K 30, 4 213N 63, 4 213P 64	1 T26A	1 T26B
	CROSSBEAM AT PP-80	TOP	4 215A 21, 4 215B 22, 4 215C 23, 4 215D 24, 4 215E 27, 4 215L 61, *4 215M 62	*1 T47A	*1 T47B
		BOTTOM	4 215F 27, 4 215G 27, 4 215H 28, 4 215J 29, 4 215K 30, 4 215N 63, 4 215P 64	1 T27A	1 T27B
	CROSSBEAM AT PP-110	TOP	4 217A 21, 4 217B 22, 4 217C 23, 4 217D 24, 4 217E 28, 4 217L 61, *4 217M 62	*1 T48A	*1 T48B
		BOTTOM	4 217F 28, 4 217G 28, 4 217H 28, 4 217J 29, 4 217K 30, 4 217N 63, 4 217P 64	1 T28A	1 T28B
EASTBOUND	CROSSBEAM AT PP-32	TOP	5 215A 51, 5 215B 52, 5 215C 53, 5 215D 54, 5 215E 55, 5 215L 71, 5 215M 72	2 T45A	2 T45B
		BOTTOM	5 215F 56, 5 215G 57, 5 215H 58, 5 215J 59, 5 215K 60, 5 215N 73, 5 215P 74	2 T25A	2 T25B
	CROSSBEAM AT PP-50	TOP	5 217A 51, 5 217B 52, 5 217C 53, 5 217D 54, 5 217E 55, 5 217L 71, 5 217M 72	2 T46A	2 T46B
		BOTTOM	5 217F 56, 5 217G 57, 5 217H 58, 5 217J 59, 5 217K 60, 5 217N 73, 5 217P 74	2 T26A	2 T26B
	CROSSBEAM AT PP-80	TOP	5 219A 51, 5 219B 52, 5 219C 53, 5 219D 54, 5 219E 55, 5 219L 71, 5 219M 72	2 T47A	2 T47B
		BOTTOM	5 219F 56, 5 219G 57, 5 219H 58, 5 219J 59, 5 219K 60, 5 219N 73, 5 219P 74	2 T27A	2 T27B
	CROSSBEAM AT PP-110	TOP	5 300A 51, 5 300B 52, 5 300C 53, 5 300D 54, 5 300E 55, 5 300L 71, 5 300M 72	2 T48A	2 T48B
		BOTTOM	5 300F 56, *5 300G 57, 5 300H 58, 5 300J 59, 5 300K 60, 5 300N 73, 5 300P 74	*2 T28A	*2 T28B

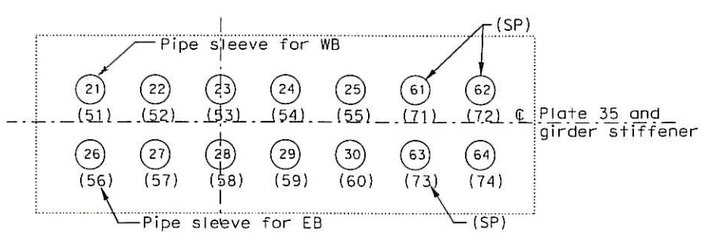

PIPE SLEEVE LOCATION

NO SCALE

THIS PLAN ACCURATE FOR ELECTRICAL WORK ONLY.

SHEET NOTES:

1. For continuation inside WB girder, see sheets E-387B thru E-387E.
2. For continuation inside EB girder, see sheet E-389F.
3. For continuation inside Crossbeam, see sheets E-386K thru E-386N.

NOTES:

1. Reference:
   - For circuit, conduit/cable tray schedules, see sheets starting at E-400 series.
   - For cable block riser diagram, see sheets E-391C thru E-391N.

REQUEST FOR INFORMATION NOT ADDRESSED IN THIS CCO REMAIN IN FORCE

MARK	DATE	DESCRIPTIONS	BY	CH'D	CCO#
0	12/18/12	Install Base CCTV System	JH	RG	150S1

REVISIONS

CONTRACT CHANGE ORDER NO. 150 S1
SHEET 39 OF 86

DETAILS
SAS SUPERSTURTURE GIRDER WESTBOUND PLATFORM CONDUIT AND CABLE TRAY PLAN (BASE CCTV SYSTEM)

SCALE: AS NOTED

E-387K

REVISED BY	DATE REVISED

CALCULATED/DESIGNED BY	JH	DATE 11/12
CHECKED BY	RG	11/12

DESIGN OVERSIGHT: BEHZAD GOLEMOHAMMADI

STATE OF CALIFORNIA - DEPARTMENT OF TRANSPORTATION

Caltrans

LAST REVISION 00-00-00

DATE PLOTTED => 18-DEC-2012
TIME PLOTTED => 17:25

FOR REDUCED PLANS ORIGINAL SCALE IS IN MILLIMETERS 0 20 40 60 80

DGN FILE =>04-0120f1_0350S26.dgn
USERNAME =>Llorico

CU 04251 | EA 0120F1

DIST	COUNTY	ROUTE	KILOMETER POST TOTAL PROJECT	SHEET No	TOTAL SHEETS
04	SF	80	13.2/13.9	350 S27	1204

REGISTERED ELECTRICAL ENGINEER 11/26/12 DATE

11-29-12
PLANS APPROVAL DATE

REGISTERED PROFESSIONAL ENGINEER DAVID H. OTO No. 10699 Exp. 06/30/2013 ELECTRICAL STATE OF CALIFORNIA

PB AMERICAS, Inc.
A Parsons Brinckerhoff Company
303 Second St., Suite 700N
San Francisco, CA 94107-1317

The State of California or its officers or agents shall not be responsible for the accuracy or completeness of electronic copies of this plan sheet.

Caltrans now has a web site! To get to the web site, go to http://www.dot.ca.gov

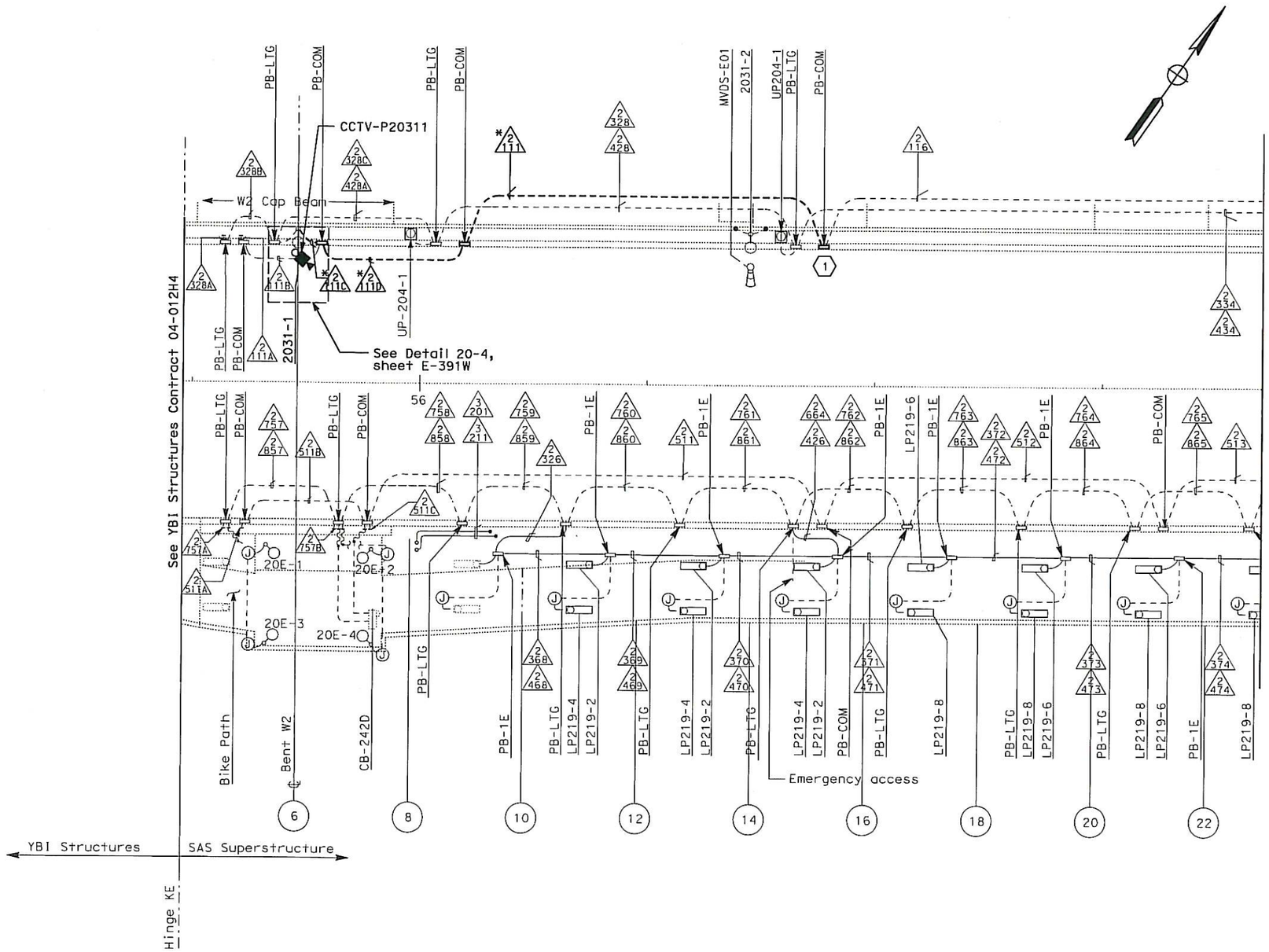

SHEET NOTES:

(1) For continuation see sheet E-389A.

NOTES:

1. References:
   - For circuit and conduit/cable tray schedules, see sheets starting at E-400 series.
   - For cable block riser diagram, see sheets E-391C thru E-391N.
   - For typical details and locations of conduit connections to light poles, see sheet E-388J.

REQUEST FOR INFORMATION NOT ADDRESSED IN THIS CCO REMAIN IN FORCE

MARK	DATE	DESCRIPTIONS	BY	CH'D	CCO#
0	12/18/12	Install Base CCTV System	RSB JH	RG	150S1

REVISIONS

CONTRACT CHANGE ORDER NO. 150S1
SHEET 40 OF 86

SAS SUPERSTRUCTURE ROADWAY EASTBOUND
(BASE CCTV SYSTEM)
SCALE: 1:200

E-388A

THIS PLAN ACCURATE FOR ELECTRICAL WORK ONLY.

ALL DIMENSIONS ARE IN METERS UNLESS OTHERWISE SHOWN

FOR REDUCED PLANS ORIGINAL SCALE IS IN MILLIMETERS 0 20 40 60 80

DGN FILE =>04-0120F1_0350S27.dgn
USERNAME =>Llorico

CU 04251 | EA 0120F1

STATE OF CALIFORNIA - DEPARTMENT OF TRANSPORTATION
Caltrans

DESIGN OVERSIGHT BEHZAD GOLEMOHAMMADI

CALCULATED/DESIGNED BY JH DATE 11/12 REVISED BY
CHECKED BY RG 11/12 DATE REVISED

LAST REVISION 00-00-00
DATE PLOTTED => 18-DEC-2012
TIME PLOTTED => 17:25

DIST	COUNTY	ROUTE	KILOMETER POST TOTAL PROJECT	SHEET No	TOTAL SHEETS
04	SF	80	13.2/13.9	350 S28	1204

REGISTERED ELECTRICAL ENGINEER 11/26/12 DATE

PLANS APPROVAL DATE 11-29-12

REGISTERED PROFESSIONAL ENGINEER DAVID H. OTO No. 10699 Exp. 06/30/2013 ELECTRICAL STATE OF CALIFORNIA

PB AMERICAS, Inc.
A Parsons Brinckerhoff Company
303 Second St., Suite 700N
San Francisco, CA 94107-1317

The State of California or its officers or agents shall not be responsible for the accuracy or completeness of electronic copies of this plan sheet.

Caltrans now has a web site! To get to the web site, go to http://www.dot.ca.gov

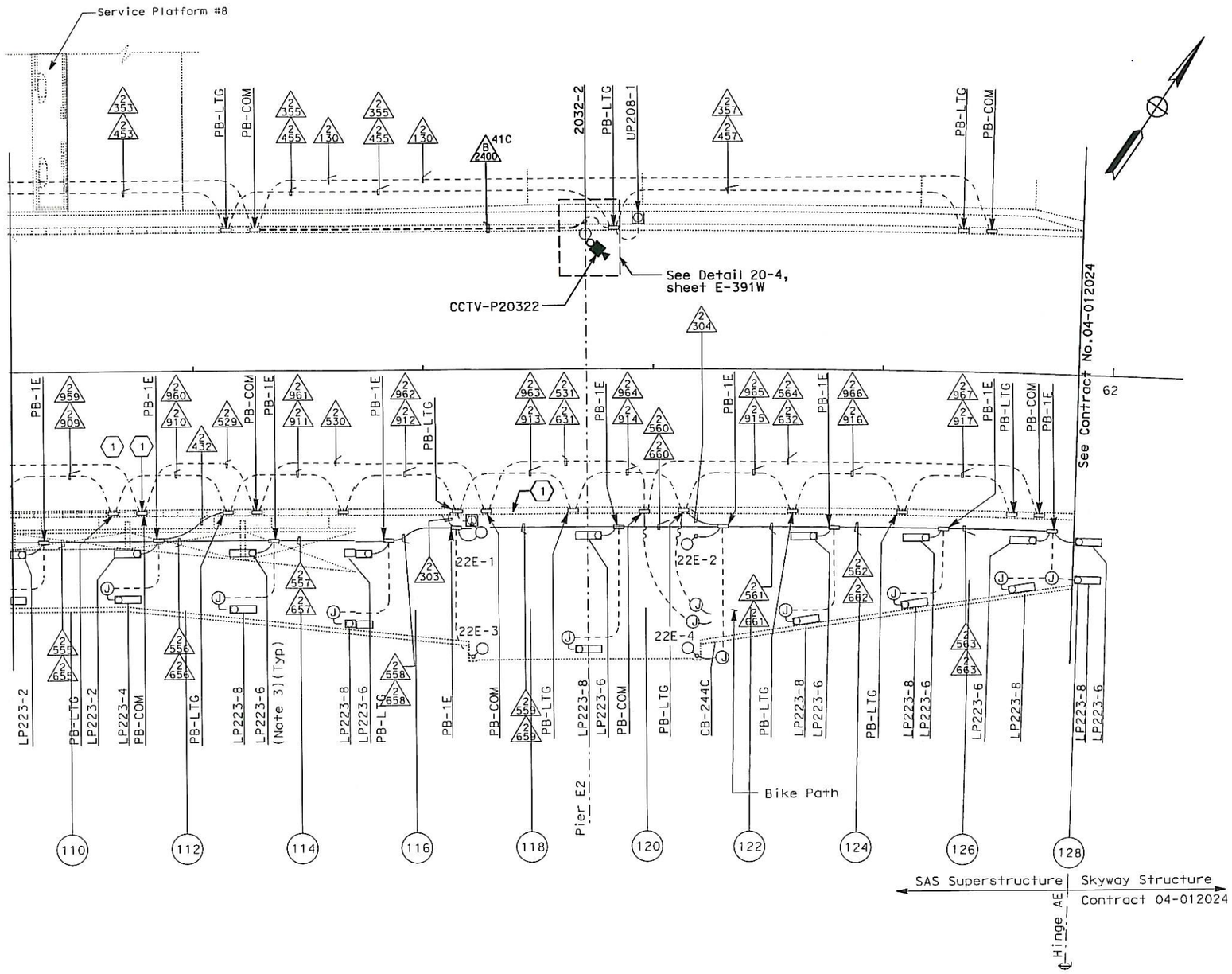

NOTES:

1. References:
   - For circuit and conduit/cable tray schedules, see sheets starting at E-400 series.
   - For cable block riser diagram, see sheets E-391C thru E-391N.
   - For typical details and locations of conduit connections to light poles, see sheet E-388J.

REQUEST FOR INFORMATION NOT ADDRESSED IN THIS CCO REMAIN IN FORCE

MARK	DATE	DESCRIPTIONS	BY	CH'D	CCO#
0	12/18/12	Install Base CCTV System	RSB JH	RG	150S1

REVISIONS

CONTRACT CHANGE ORDER NO. 150 S1
SHEET 41 OF 86

SAS SUPERSTRUCTURE ROADWAY EASTBOUND
(BASE CCTV SYSTEM)

SCALE: 1:200

E-388F

CALCULATED/ DESIGNED BY	JH	DATE 11/12	REVISED BY
CHECKED BY	RG	11/12	DATE REVISED

DESIGN OVERSIGHT
BEHZAD GOLEMOHAMMADI

STATE OF CALIFORNIA - DEPARTMENT OF TRANSPORTATION

LAST REVISION 00-00-00

DATE PLOTTED => 18-DEC-2012
TIME PLOTTED => 17:25

THIS PLAN ACCURATE FOR ELECTRICAL WORK ONLY.

ALL DIMENSIONS ARE IN METERS UNLESS OTHERWISE SHOWN

FOR REDUCED PLANS ORIGINAL SCALE IS IN MILLIMETERS 0 20 40 60 80

DGN FILE =>04-0120f1_0350S28.dgn
USERNAME =>Llorico

CU 04251

EA 0120F1

UTILITY PANEL UP-204 (CKT #2095) (1)

Location: SAS SUPERSTRUCTURE SERVICE PLATFORM #4

LOAD DESCRIPTION	LTG	REC	OTH.	CB		CB	LTG	REC	OTH.	LOAD DESCRIPTION
Recept (2) Eastbound North Barrier		360		20/1	1 A 2	20/1			1000	Base Camera Panel BCP-W2
(3) Recept (1) W2E at Grade		180		20/1	3 B 4	20/1			1000	Base Camera Panel BCP-W2 (UPS Powe)
Recept (2) Service Platform #4		360		20/1	5 C 6	20/1			1000	Base Camera Panel BCP-W2 (Exhaust Fan)
Recept (2) Girder		360		20/1	7 A 8	20/1	574			Girder Lighting (14)
Base Camera Transition Panel BCTP-SP4			1000	20/1	9 B 10	30/1			2000	Controller Cabinet #TOS-4EA
(3) Base Camera Transition Panel BCTP-W2E			1000	20/1	11 C 12	20/1		180		Recept (1) W2W at Grade (3)
TOTAL VA		1260	2000				574	180	5000	TOTAL VA

LOAD SUMMARY (INCLUDES .90 PF) (VA)

Lighting (At 100%): 574
Gen Use (1st 10 kVA at 100% Plus 50% of remainder): 8440

TOTAL kVA: 9014

BALANCE (kVA)

Phase A - 2.294
Phase B - 4.180
Phase C - 2.540

VOLTAGE: 208/120 V
PHASE/WIRES: 3-phase, 4-wire
BUS RATING: 100 A
MAIN: MAIN LUGS ONLY
MOUNTING: Surface
K.A.I.C.: 10

UTILITY PANEL UP-205 (CKT #2096) (2)

Location: SAS SUPERSTRUCTURE SERVICE PLATFORM #5

LOAD DESCRIPTION	LTG	REC	OTH.	CB		CB	LTG	REC	OTH.	LOAD DESCRIPTION
Recept (2) Eastbound North Barrier		360		20/1	1 A 2	20/1			1000	Base Camera Transition Panel BCTP-SP5
Spare				20/1	3 B 4	20/1				Spare
Recept (2) Service Platform #5		360		20/1	5 C 6	20/1				Spare
Recept (2) Girder		360		20/1	7 A 8	20/1	738			Girder Lighting (18)
RTU #10E (PLC Power Supply)			100	20/1	9 B 10	20/1				Spare
RTU-#10E (Lighting & Receptacle)	105	180	150	20/1	11 C 12	20/1				Spare
TOTAL WATTS	105	1260	250				738		1000	TOTAL VA

LOAD SUMMARY (INCLUDES .90 PF) (VA)

Lighting (At 100%): 843
Gen Use (1st 10 kVA at 100% Plus 50% of remainder): 2510

TOTAL kVA: 3.353

BALANCE (kVA)

Phase A - 2.458
Phase B - 0.100
Phase C - 0.795

VOLTAGE: 208Y/120 V
PHASE/WIRES: 3-phase, 4-wire
BUS RATING: 100 A
MAIN: MAIN LUGS ONLY
MOUNTING: Surface
K.A.I.C.: 10

THIS PLAN ACCURATE FOR ELECTRICAL WORK ONLY.

Caltrans Metric

DIST	COUNTY	ROUTE	KILOMETER POST TOTAL PROJECT	SHEET No	TOTAL SHEETS
04	SF	80	13.2/13.9	350 S29R1	1204

REGISTERED ELECTRICAL ENGINEER 11/26/12 DATE

11-29-12
PLANS APPROVAL DATE

REGISTERED PROFESSIONAL ENGINEER DAVID H. OTO No. 10699 Exp. 06/30/2013 ELECTRICAL STATE OF CALIFORNIA

PB AMERICAS, Inc.
A Parsons Brinckerhoff Company
303 Second St., Suite 700N
San Francisco, CA 94107-1317

The State of California or its officers or agents shall not be responsible for the accuracy or completeness of electronic copies of this plan sheet.

Caltrans now has a web site! To get to the web site, go to http://www.dot.ca.gov

SHEET NOTES:

(1) See sheet E-386J for Panel Location.
(2) See sheet E-386K for Panel Location.
(3) For reference only.

NOTES:

1. The Contractor shall add circuit schedules as shown.
2. References:
   - For circuit and conduit/cable tray schedules, see sheets starting at E-400 series.
   - For cable block riser diagram, see sheets E-391C thru E-391N.

REGISTERED PROFESSIONAL ENGINEER DAVID H. OTO No. 10699 Exp. 06/30/2013 ELECTRICAL STATE OF CALIFORNIA

(1) FOR REVISION ONLY

REQUEST FOR INFORMATION NOT ADDRESSED IN THIS CCO REMAIN IN FORCE

MARK	DATE	DESCRIPTIONS	BY	CH'D	CCO#
1	05/30/13	Install Base CCTV System	TW	RG	150S1
0	12/18/12	Install Base CCTV System	JH	RG	150S1

REVISIONS

CONTRACT CHANGE ORDER NO. 150 S1
SHEET 42 OF 86

DETAILS
SAS SUPERSTRUCTURE ROADWAY EASTBOUND PANEL SCHEDULES UP-204, UP-205 (BASE CCTV SYSTEM)

NO SCALE

E-388G

STATE OF CALIFORNIA - DEPARTMENT OF TRANSPORTATION
Caltrans

DESIGN OVERSIGHT: BEHZAD GOLEMOHAMMADI

CALCULATED/DESIGNED BY: JH | DATE 11/12
CHECKED BY: RG | DATE REVISED
REVISED BY

LAST REVISION 05-30-13
DATE PLOTTED => 29-MAY-2013
TIME PLOTTED => 14:56

FOR REDUCED PLANS ORIGINAL SCALE IS IN MILLIMETERS 0 20 40 60 80

DGN FILE =>04-0120f1_0350S29r01.dgn
USERNAME =>Llorico

CU 04251 | EA 0120F1

DIST	COUNTY	ROUTE	KILOMETER POST TOTAL PROJECT	SHEET No	TOTAL SHEETS
04	SF	80	13.2/13.9	350 S30	1204

REGISTERED ELECTRICAL ENGINEER 11/26/12 DATE

11-29-12
PLANS APPROVAL DATE

REGISTERED PROFESSIONAL ENGINEER DAVID H. OTO No. 10699 Exp. 06/30/2013 ELECTRICAL STATE OF CALIFORNIA

PB AMERICAS, Inc.
A Parsons Brinckerhoff Company
303 Second St., Suite 700N
San Francisco, CA 94107-1317

The State of California or its officers or agents shall not be responsible for the accuracy or completeness of electronic copies of this plan sheet.

Caltrans now has a web site! To get to the web site, go to http://www.dot.ca.gov

Caltrans Metric

SHEET NOTES:

(1) See sheet E-386M for Panel location.
(2) See sheet E-386N for Panel location.
(3) For reference only.

NOTES:

1. The Contractor shall add circuit schedules as shown.
2. References:
   - For circuit and conduit/cable tray schedules, see sheets starting at E-400 series.
   - For cable block riser diagram, see sheets E-391C thru E-391N.

UTILITY PANEL UP-207 (CKT #2098) (1)

Location: SAS SUPERSTRUCTURE SERVICE PLATFORM #7

LOAD DESCRIPTION	LTG	REC	OTH.	CB		CB	LTG	REC	OTH.	LOAD DESCRIPTION
Recept (1) Eastbound North Barrier		180		20/1	1 A 2	20/1			1000	Base Camera Transition Panel BCTP-SP7
Spare				20/1	3 B 4	20/1				Spare
Recept (2) Service Platform #7		360		20/1	5 C 6	20/1				Spare
Recept (2) Girder		360		20/1	7 A 8	20/1	738			Girder Lighting (18)
Spare				20/1	9 B 10	30/1			2000	
Spare				20/1	11 C 12	20/1				Spare
TOTAL WATTS		900					738		3000	TOTAL VA

LOAD SUMMARY (INCLUDES .90 PF) (VA)

Lighting (At 100%): 738
Gen Use (1st 10 kVA at 100% Plus 50% of remainder): 3900

TOTAL kVA: 4.638

BALANCE (kVA)

Phase A - 2.278
Phase B - 2.000
Phase C - 0.360

VOLTAGE: 208/120 V
PHASE/WIRES: 3-phase, 4-wire
BUS RATING: 100 A
MAIN: MAIN LUGS ONLY
MOUNTING: Surface
K.A.I.C.: 10

UTILITY PANEL UP-208 (CKT #2099) (2)

Location: SAS SUPERSTRUCTURE SERVICE PLATFORM #8

LOAD DESCRIPTION	LTG	REC	OTH.	CB		CB	LTG	REC	OTH.	LOAD DESCRIPTION	
Recept (3) Eastbound North Barrier		540		20/1	1 A 2	20/1			10	CB-243A	
Spare				20/1	3 B 4	20/1			10	CB-243B	
		360		20/1	5 C 6	20/1			20	CB-243C,CB-244C	
Recept (3) Girder		540		20/1	7 A 8	20/1	984			Girder Lighting (24)	
RTU-#11E (PLC Power Supply)			100	20/1	9 B 10	20/1	697			Girder Lighting (17)	
RTU-#11E (Lighting & Receptacle)	105	180	150	20/1	11 C 12	30/1			2880	Fog Detection Panel FDP-6	
Spare				20/1	13 A 14	20/1			1000	Base Camera Transition Panel BCTP-SP8A	
Navigation Relay Cabinet # NAP-8			600	20/1	15 B 16	20/1					
Spare				20/1	17 C 18	20/1			1000	Base Camera Transition Panel BCTP-E2E	(3)
				20/1	19 A 20	20/1			1000	Base Camera Transition Panel BCTP-E2W	(3)
				20/1	21 B 22	20/1			180	Recept (1) Pier E2E Cap	(3)
				20/1	23 C 24	20/1			180	Recept (1) Pier E2W Cap	(3)
TOTAL VA	105	1620	850				1681		6280	TOTAL VA	

LOAD SUMMARY (INCLUDES .90 PF) (VA)

Lighting (At 100%): 1786
Gen Use (1st 10 kVA at 100% Plus 50% of remainder): 8.750

TOTAL kVA: 10.536

BALANCE (kVA)

Phase A - 4.074
Phase B - 1.587
Phase C - 4.875

VOLTAGE: 208Y/120 V
PHASE/WIRES: 3-phase, 4-wire
BUS RATING: 100 A
MAIN: MAIN LUGS ONLY
MOUNTING: Surface
K.A.I.C.: 10

REQUEST FOR INFORMATION NOT ADDRESSED IN THIS CCO REMAIN IN FORCE

MARK	DATE	DESCRIPTIONS	BY	CH'D	CCO#
0	12/18/12	Install Base CCTV System	JH	RG	15051

REVISIONS

CONTRACT CHANGE ORDER NO. 15051
SHEET 43 OF 86

DETAILS
SAS SUPERSTRUCTURE ROADWAY EASTBOUND PANEL SCHEDULES UP-207, UP-208 (BASE CCTV SYSTEM)

NO SCALE

E-388H

REVISED BY	DATE REVISED

CALCULATED/DESIGNED BY	CHECKED BY
JH	RG

DATE 11/12

DESIGN OVERSIGHT
BEHZAD GOLEMOHAMMADI

STATE OF CALIFORNIA - DEPARTMENT OF TRANSPORTATION
Caltrans

THIS PLAN ACCURATE FOR ELECTRICAL WORK ONLY.

FOR REDUCED PLANS ORIGINAL SCALE IS IN MILLIMETERS 0 20 40 60 80

DGN FILE =>04-0120f1_0350S30.dgn
USERNAME =>Liorico

CU 04251 | EA 0120F1

LAST REVISION 00-00-00
DATE PLOTTED => 18-DEC-2012
TIME PLOTTED => 17:25

DIST	COUNTY	ROUTE	KILOMETER POST TOTAL PROJECT	SHEET No	TOTAL SHEETS
04	SF	80	13.2/13.9	350 S31	1204

REGISTERED ELECTRICAL ENGINEER 11/26/12 DATE

PLANS APPROVAL DATE 11-29-12

REGISTERED PROFESSIONAL ENGINEER DAVID H. OTO No. 10699 Exp. 06/30/2013 ELECTRICAL STATE OF CALIFORNIA

PB AMERICAS, Inc.
A Parsons Brinckerhoff Company
303 Second St., Suite 700N
San Francisco, CA 94107-1317

The State of California or its officers or agents shall not be responsible for the accuracy or completeness of electronic copies of this plan sheet.

Caltrans now has a web site! To get to the web site, go to http://www.dot.ca.gov

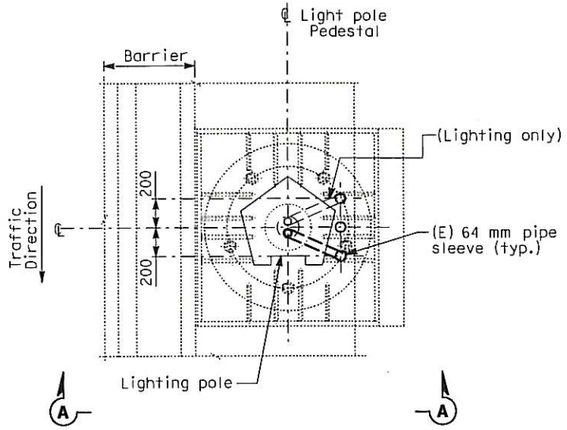

PLAN
CONDUIT STUB-UP PLAN FOR ROADWAY LIGHTING ON A METAL BASE (SIMILAR FOR OVERHEAD SIGN ON A METAL BASE EXCEPT AS NOTED)
SCALE 1:20

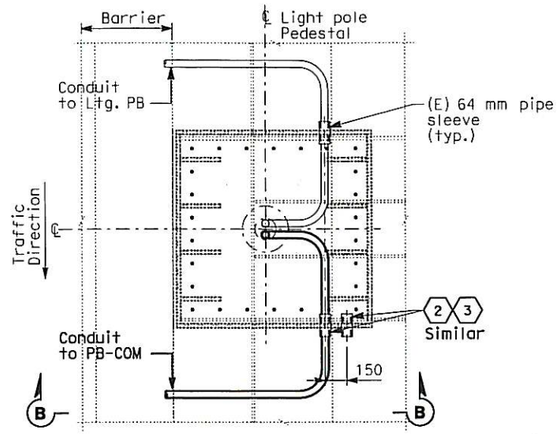

PLAN
CONDUIT STUB-UP PLAN FOR ROADWAY LIGHTING ON A METAL BASE AT PIER E2 ONLY
SCALE 1:20

SHEET NOTES:

1. Bond grounding bushing to ground lug of lighting pole with #6 bare copper wire.
2. See Utility Detail No. 1 (Sheet No. 965 of 1204) for conduit penetration through girder plate and lighting pole metal base. The Contractor shall install sealant between the sleeve and conduit to prevent water or moisture from passing inside the sleeve.
3. Cap spare sleeves for future use where noted.
4. Ensure that the maximum of three conduits passing through the 150 mm ø pedestal plate opening are separated as much as possible from each other.

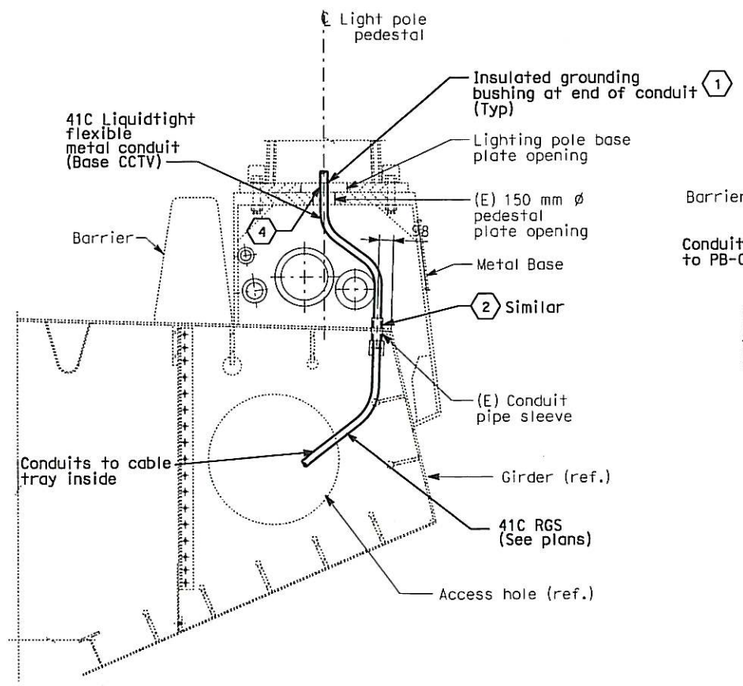

SECTION A-A
LIGHT POLE METAL PEDESTAL CONDUIT TYPICAL INSTALLATION
SCALE 1:20

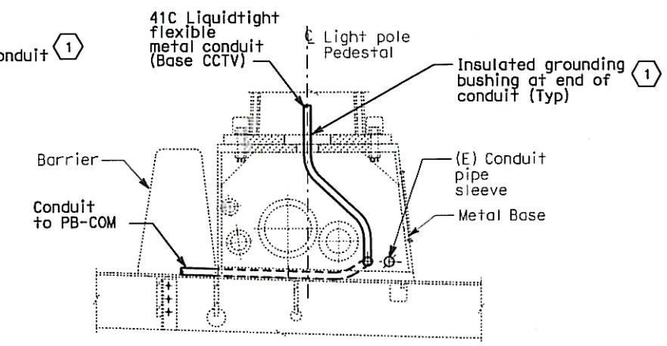

SECTION B-B
SCALE 1:20

NOTES:

1. References:
   - For location of lighting poles, see sheet E-388A thru E-388F.

REQUEST FOR INFORMATION NOT ADDRESSED IN THIS CCO REMAIN IN FORCE					
0	12/18/12	Install Base CCTV System	JH	RG	150S1
MARK	DATE	DESCRIPTIONS	BY	CH'D	CCO#
REVISIONS					

CONTRACT CHANGE ORDER NO. 150 S1
SHEET 44 OF 86

DETAILS
SAS SUPERSTRUCTURE ROADWAY EASTBOUND CONDUIT LOCATIONS (BASE CCTV SYSTEM)
SCALE AS NOTED

E-388J

CALCULATED/DESIGNED BY	JH	DATE 11/12	REVISED BY	DATE REVISED
CHECKED BY	RG	11/12		

DESIGN OVERSIGHT: BEHZAD GOLEMOHAMMADI

STATE OF CALIFORNIA - DEPARTMENT OF TRANSPORTATION

THIS PLAN ACCURATE FOR ELECTRICAL WORK ONLY.

ALL DIMENSIONS ARE IN MILLIMETERS UNLESS OTHERWISE SHOWN.

FOR REDUCED PLANS ORIGINAL SCALE IS IN MILLIMETERS 0 20 40 60 80

DGN FILE =>04-0120F1_0350S31.dgn
USERNAME =>Llorico

CU 04251 | EA 0120F1

LAST REVISION 00-00-00 | DATE PLOTTED => 18-DEC-2012 | TIME PLOTTED => 17:25

DIST	COUNTY	ROUTE	KILOMETER POST TOTAL PROJECT	SHEET No	TOTAL SHEETS
04	SF	80	13.2/13.9	350 S32	1204

REGISTERED ELECTRICAL ENGINEER 11/26/12 DATE

11-29-12
PLANS APPROVAL DATE

REGISTERED PROFESSIONAL ENGINEER DAVID H. OTO No. 10699 Exp. 06/30/2013 ELECTRICAL STATE OF CALIFORNIA

PB AMERICAS, Inc.
A Parsons Brinckerhoff Company
303 Second St., Suite 700N
San Francisco, CA 94107-1317

The State of California or its officers or agents shall not be responsible for the accuracy or completeness of electronic copies of this plan sheet.

Caltrans now has a web site! To get to the web site, go to http://www.dot.ca.gov

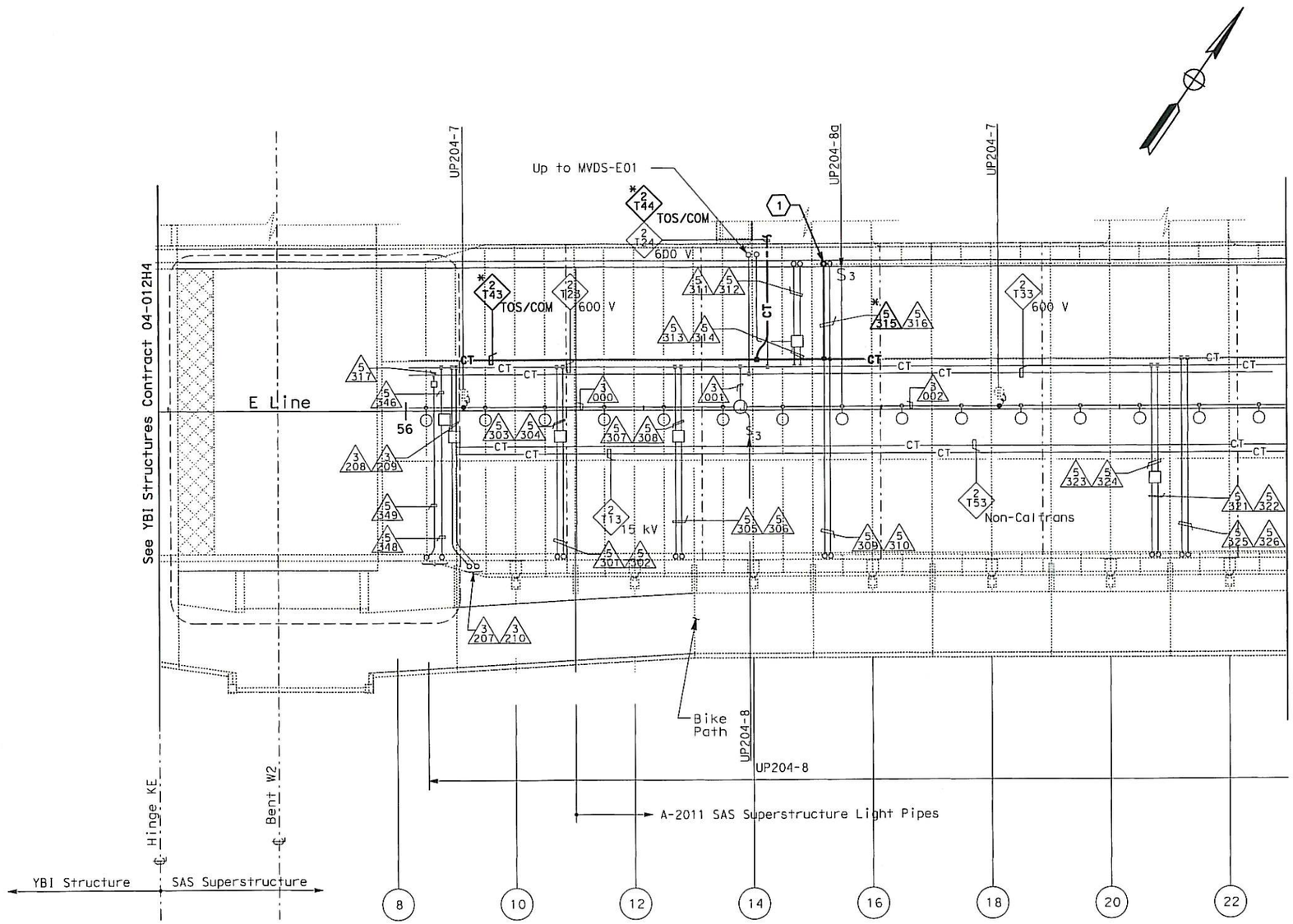

SHEET NOTES:

(1) For continuation see sheet E-388A.

NOTES:

1. References:
   - For circuit and conduit/cable tray schedules, see sheets starting at E-400 series.
   - For cable block riser diagram, see sheets E-391C thru E-391N.

REQUEST FOR INFORMATION NOT ADDRESSED IN THIS CCO REMAIN IN FORCE

MARK	DATE	DESCRIPTIONS	BY	CH'D	CCO#
0	12/18/12	Install Base CCTV System	JH	RG	150S1

REVISIONS

CONTRACT CHANGE ORDER NO. 150 S1
SHEET 45 OF 86

SAS SUPERSTRUCTURE GIRDER EASTBOUND
(BASE CCTV SYSTEM)
SCALE: 1:200

E-389A

REVISED BY	DATE REVISED

CALCULATED/DESIGNED BY	JH	DATE 11/12
CHECKED BY	RG	11/12

DESIGN OVERSIGHT
BEHZAD GOLEMOHAMMADI

STATE OF CALIFORNIA - DEPARTMENT OF TRANSPORTATION
Caltrans

THIS PLAN ACCURATE FOR ELECTRICAL WORK ONLY.

ALL DIMENSIONS ARE IN METERS UNLESS OTHERWISE SHOWN

FOR REDUCED PLANS ORIGINAL SCALE IS IN MILLIMETERS 0 20 40 60 80

DGN FILE =>04-0120f1_0350S32.dgn
USERNAME =>Llorico

CU 04251

EA 0120F1

LAST REVISION 00-00-00
DATE PLOTTED => 18-DEC-2012
TIME PLOTTED => 17:25

DIST	COUNTY	ROUTE	KILOMETER POST TOTAL PROJECT	SHEET No	TOTAL SHEETS
04	SF	80	13.2/13.9	350 S33	1204

REGISTERED ELECTRICAL ENGINEER DATE 11/26/12

PLANS APPROVAL DATE 11-29-12

REGISTERED PROFESSIONAL ENGINEER DAVID H. OTO No. 10699 Exp. 06/30/2013 ELECTRICAL STATE OF CALIFORNIA

PB AMERICAS, Inc.
A Parsons Brinckerhoff Company
303 Second St., Suite 700N
San Francisco, CA 94107-1317

The State of California or its officers or agents shall not be responsible for the accuracy or completeness of electronic copies of this plan sheet.

Caltrans now has a web site! To get to the web site, go to http://www.dot.ca.gov

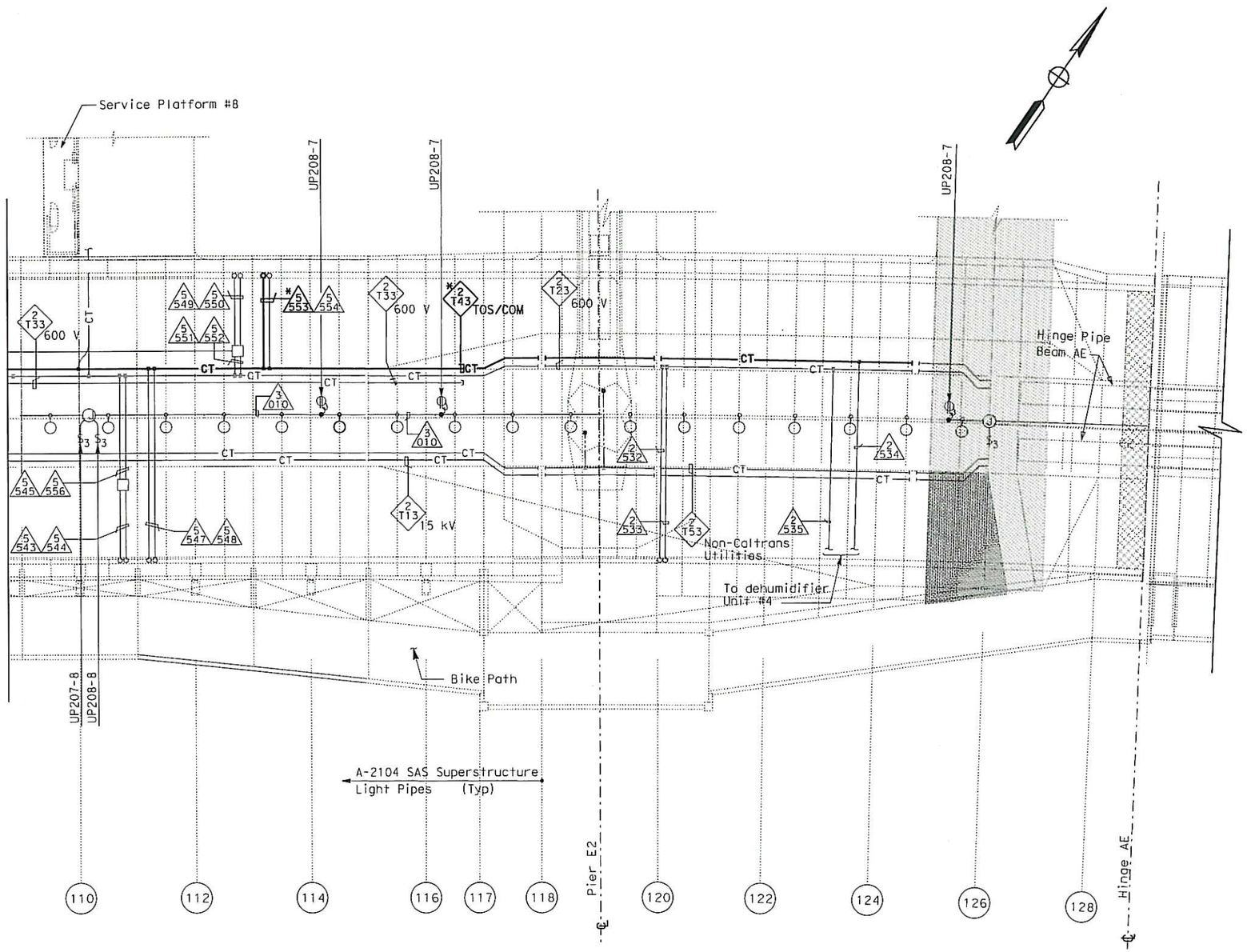

NOTES:

1. References:
   - For circuit and conduit/cable tray schedules, see sheets starting at E-400 series.
   - For cable block riser diagram, see sheets E-391C thru E-391N.

REQUEST FOR INFORMATION NOT ADDRESSED IN THIS CCO REMAIN IN FORCE

MARK	DATE	DESCRIPTIONS	BY	CH'D	CCO#
0	12/18/12	Install Base CCTV System	RSB JH	RG	150S1

REVISIONS

CONTRACT CHANGE ORDER NO. 150 S1
SHEET 46 OF 86

SAS SUPERSTRUCTURE GIRDER EASTBOUND
(BASE CCTV SYSTEM)

SCALE: 1:200

E-389F

THIS PLAN ACCURATE FOR ELECTRICAL WORK ONLY.

ALL DIMENSIONS ARE IN METERS UNLESS OTHERWISE SHOWN

FOR REDUCED PLANS ORIGINAL SCALE IS IN MILLIMETERS 0 20 40 60 80

DGN FILE =>04-0120f1_0350S33.dgn
USERNAME =>Llorico

CU 04251

EA 0120F1

DATE PLOTTED => 18-DEC-2012
TIME PLOTTED => 17:25

LAST REVISION 00-00-00

STATE OF CALIFORNIA - DEPARTMENT OF TRANSPORTATION

Caltrans

DESIGN OVERSIGHT
BEHZAD GOLEMOHAMMADI

CALCULATED/DESIGNED BY
CHECKED BY

JH RG

DATE REVISED
DATE REVISED

DIST	COUNTY	ROUTE	KILOMETER POST TOTAL PROJECT	SHEET No	TOTAL SHEETS
04	SF	80	13.2/13.9	350 S34	1204

REGISTERED ELECTRICAL ENGINEER 11/26/12 DATE

PLANS APPROVAL DATE 11-29-12

REGISTERED PROFESSIONAL ENGINEER DAVID H. OTO No. 10699 Exp. 06/30/2013 ELECTRICAL STATE OF CALIFORNIA

PB AMERICAS, Inc.
A Parsons Brinckerhoff Company
303 Second St., Suite 700N
San Francisco, CA 94107-1317

The State of California or its officers or agents shall not be responsible for the accuracy or completeness of electronic copies of this plan sheet.

Caltrans now has a web site! To get to the web site, go to http://www.dot.ca.gov

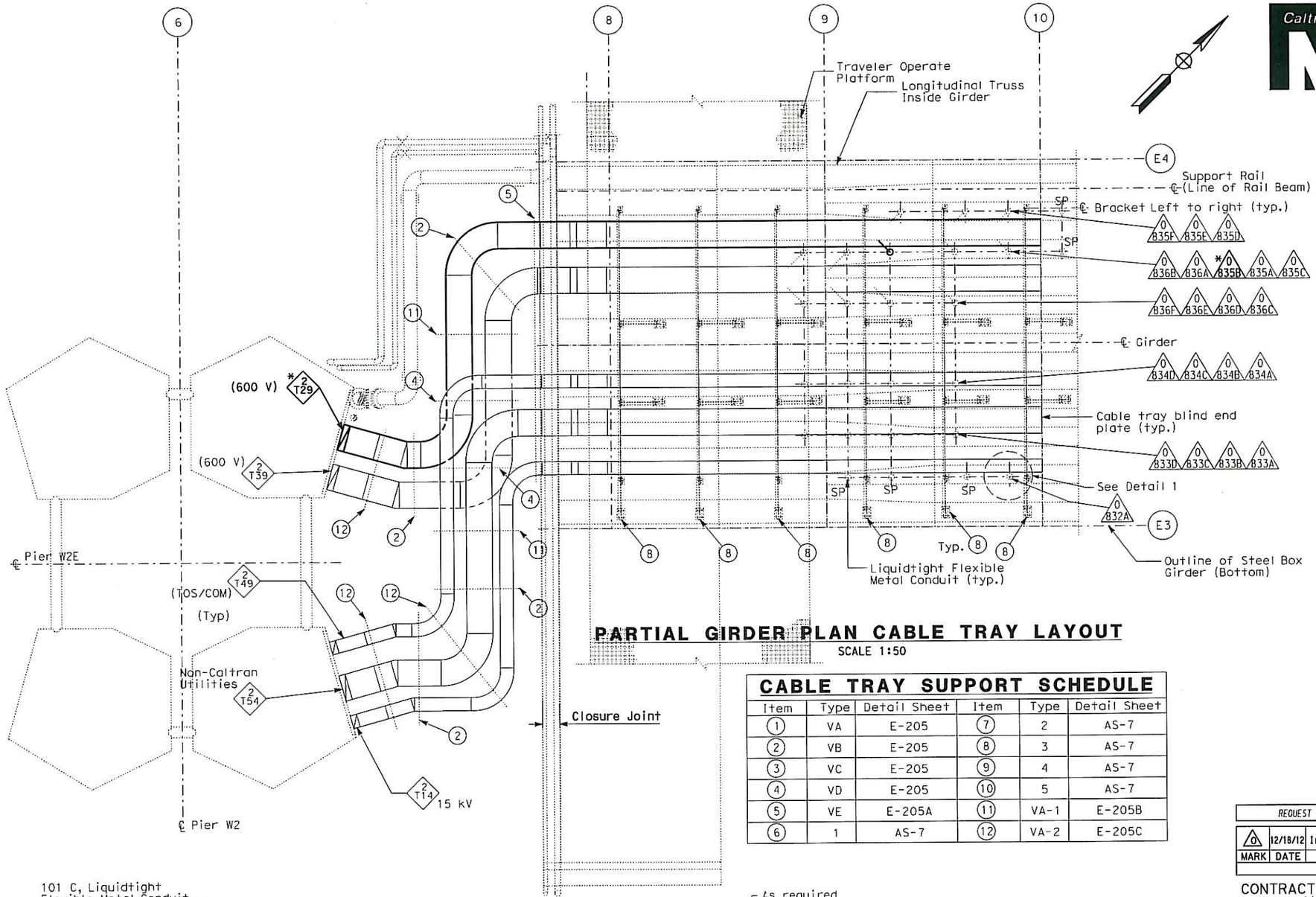

PARTIAL GIRDER PLAN CABLE TRAY LAYOUT

SCALE 1:50

CABLE TRAY SUPPORT SCHEDULE

Item	Type	Detail Sheet	Item	Type	Detail Sheet
1	VA	E-205	7	2	AS-7
2	VB	E-205	8	3	AS-7
3	VC	E-205	9	4	AS-7
4	VD	E-205	10	5	AS-7
5	VE	E-205A	11	VA-1	E-205B
6	1	AS-7	12	VA-2	E-205C

NOTES:

1. References:
   - For circuit and conduit/cable tray schedules, see sheets starting at E-400 series.
   - For cable block riser diagram, see sheets E-391C thru E-391N.

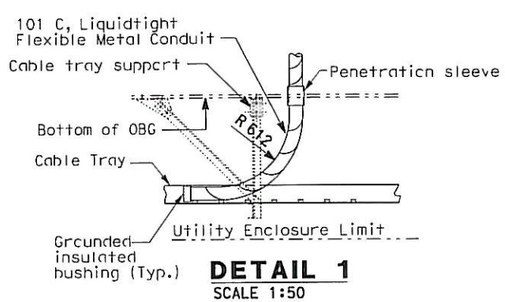

DETAIL 1

SCALE 1:50
CABLE TRAY TOP ENTRY

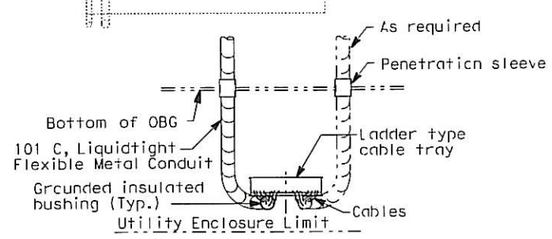

ALTERNATE

SCALE 1:50
CABLE TRAY BOTTOM ENTRY
(Cable tray supports not shown for clarity)

REQUEST FOR INFORMATION NOT ADDRESSED IN THIS CCO REMAIN IN FORCE					
0	12/18/12	Install Base CCTV System	JH	RG	150S1
MARK	DATE	DESCRIPTIONS	BY	CH'D	CCO#
		REVISIONS			

CONTRACT CHANGE ORDER NO. 150 S1
SHEET 47 OF 86

DETAILS
SAS SUPERSTRUCTURE GIRDER EASTBOUND TYPICAL TRAY AND CONDUIT INSTALLATION AT PIER W2E (BASE CCTV SYSTEM)

SCALE AS NOTED

E-389G

THIS PLAN ACCURATE FOR ELECTRICAL WORK ONLY.

STATE OF CALIFORNIA - DEPARTMENT OF TRANSPORTATION

DESIGN OVERSIGHT: BEHZAD GOLEMOHAMMADI

CALCULATED/DESIGNED BY: JH | DATE 11/12 | REVISED BY
CHECKED BY: RG | 11/12 | DATE REVISED

LAST REVISION 00-00-00 | DATE PLOTTED => 18-DEC-2012 | TIME PLOTTED => 17:25

FOR REDUCED PLANS ORIGINAL SCALE IS IN MILLIMETERS 0 20 40 60 80

DGN FILE =>04-0120F1_0350S34.dgn
USERNAME =>Llorico

CU 04251 | EA 0120F1

DIST	COUNTY	ROUTE	KILOMETER POST TOTAL PROJECT	SHEET No	TOTAL SHEETS
04	SF	80	13.2/13.9	350 S35	1204

REGISTERED ELECTRICAL ENGINEER 11/26/12 DATE

PLANS APPROVAL DATE 11-29-12

REGISTERED PROFESSIONAL ENGINEER DAVID H. OTO No. 10699 Exp. 06/30/2013 ELECTRICAL STATE OF CALIFORNIA

PB AMERICAS, Inc.
A Parsons Brinckerhoff Company
303 Second St., Suite 700N
San Francisco, CA 94107-1317

The State of California or its officers or agents shall not be responsible for the accuracy or completeness of electronic copies of this plan sheet.

Caltrans now has a web site! To get to the web site, go to http://www.dot.ca.gov

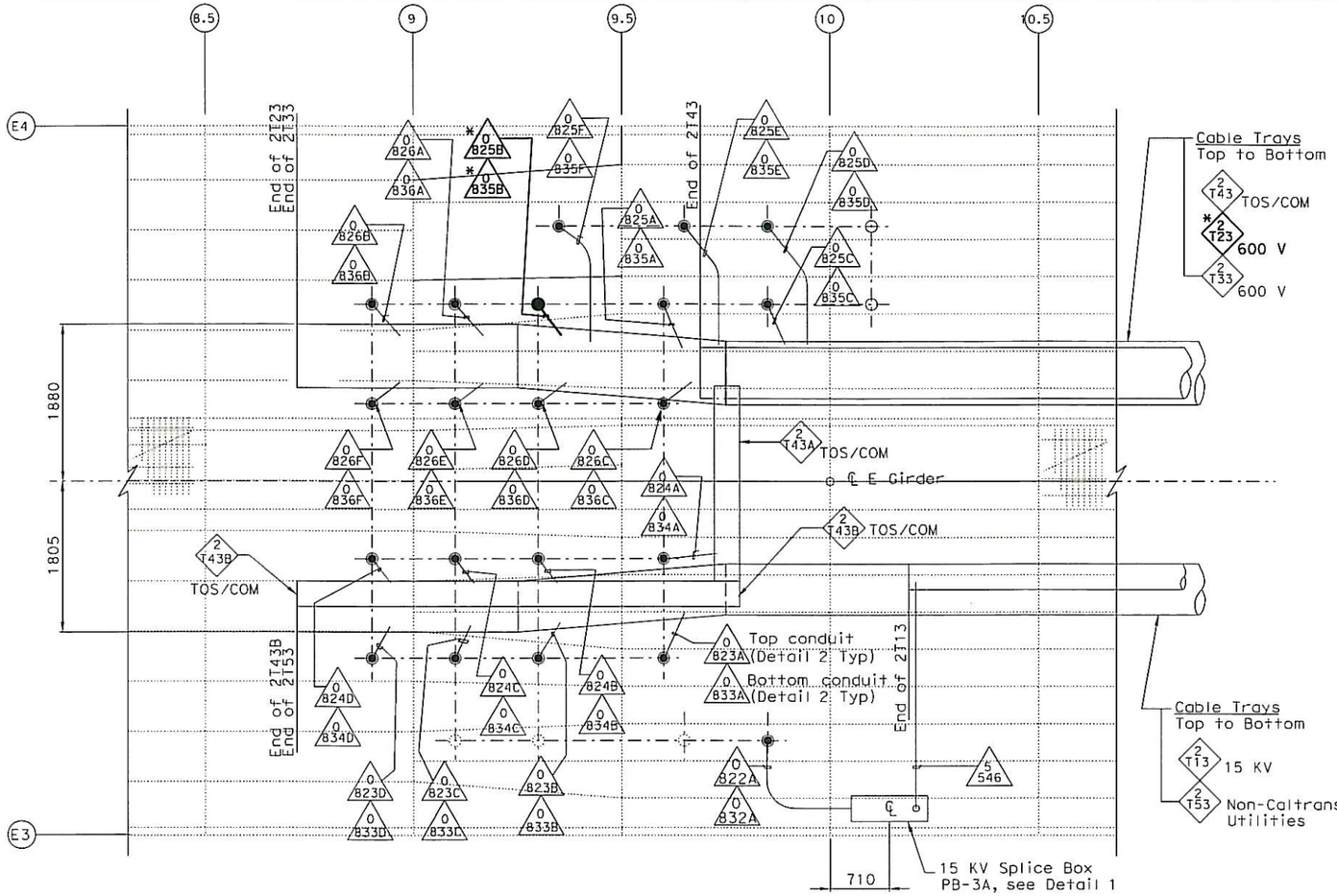

PARTIAL GIRDER BASE AND CABLE TRAY PLAN (1)

SCALE 1:50

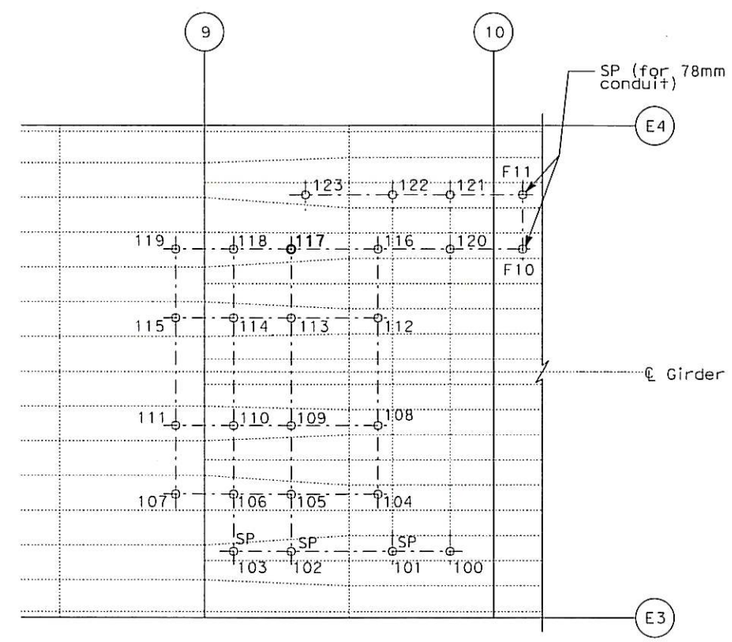

PIPE SLEEVE LOCATION-PLAN

SCALE 1:100

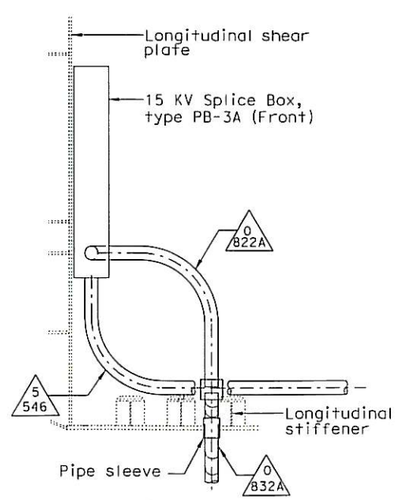

DETAIL 1

SCALE 1:50

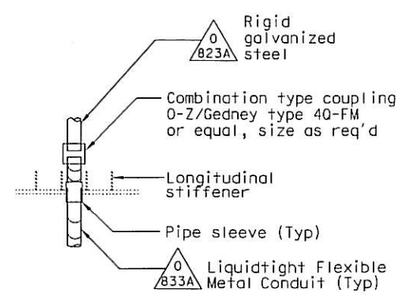

DETAIL 2

SCALE 1:50

NOTES:

1. References:
   - For circuit and conduit/cable tray schedules, see sheets starting at E-400 series.
   - For cable block riser diagram, see sheets E-391C thru E-391N.

REQUEST FOR INFORMATION NOT ADDRESSED IN THIS CCO REMAIN IN FORCE					
0	12/18/12	Install Base CCTV System	JH	RG	150S1
MARK	DATE	DESCRIPTIONS	BY	CH'D	CCO#
		REVISIONS			

CONTRACT CHANGE ORDER NO. 150 S1
SHEET 48 OF 86

THIS PLAN ACCURATE FOR ELECTRICAL WORK ONLY.

DETAILS
SAS SUPERSTRUCTURE GIRDER EASTBOUND CABLE TRAY AND CONDUIT AT PIER W2E (BASE CCTV SYSTEM)

SCALE AS NOTED

E-389H

CALCULATED/DESIGNED BY	JH	DATE 11/12	REVISED BY
CHECKED BY	RG		DATE REVISED

DESIGN OVERSIGHT
BEHZAD GOLEMOHAMMADI

STATE OF CALIFORNIA - DEPARTMENT OF TRANSPORTATION
Caltrans

LAST REVISION 00-00-00
DATE PLOTTED => 11-APR-2013
TIME PLOTTED => 14:44

FOR REDUCED PLANS ORIGINAL SCALE IS IN MILLIMETERS 0 20 40 60 80

DGN FILE =>04-0120f1_0350S35.dgn
USERNAME =>Llorico

CU 04251

EA 0120F1

DIST	COUNTY	ROUTE	KILOMETER POST TOTAL PROJECT	SHEET No	TOTAL SHEETS
04	SF	80	13.2/13.9	350 S36R1	1204

REGISTERED ELECTRICAL ENGINEER 11-26-12 DATE

11-29-12
PLANS APPROVAL DATE

REGISTERED PROFESSIONAL ENGINEER DAVID H. OTO No. 10699 Exp. 06/30/2013 ELECTRICAL STATE OF CALIFORNIA

PB AMERICAS, Inc.
A Parsons Brinckerhoff Company
303 Second St., Suite 700N
San Francisco, CA 94107-1317

The State of California or its officers or agents shall not be responsible for the accuracy or completeness of electronic copies of this plan sheet.

Caltrans now has a web site! To get to the web site, go to http://www.dot.ca.gov

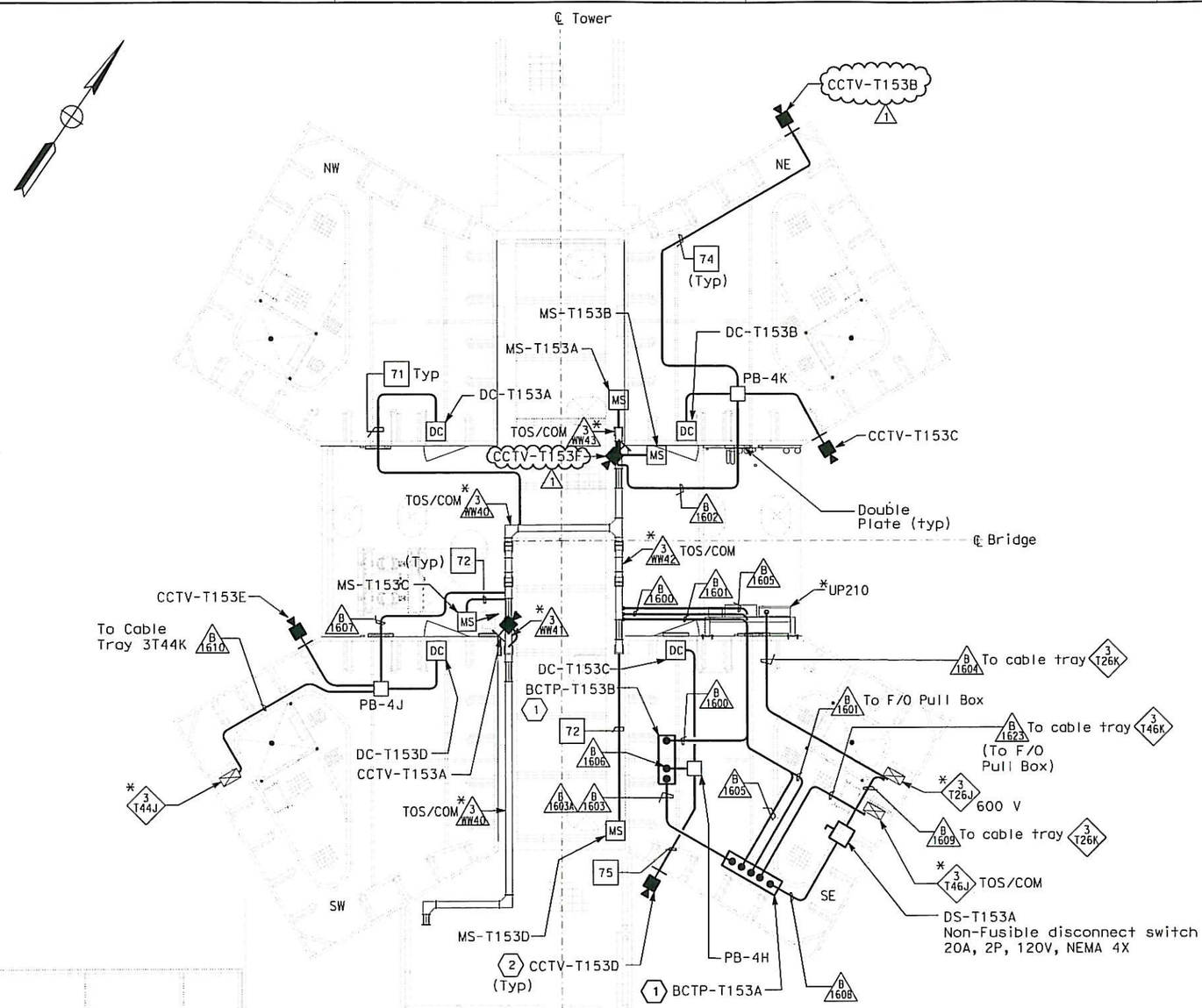

PLAN AT ELEV 53.85 m

SCALE 1:40

SHEET NOTES:

(1) Base Camera Transition Panel #BCTP-T153A (See Detail 1, E-390E) 914 H x 762 W x 254 D

Base Camera Transition Panel #BCTP-T153B (See Detail 1, E-390E) 914 H x 762 W x 254 D

(2) For camera and conduit installation see E-391Y.

NOTES:

1. References:
   - For circuit and conduit/cable tray schedules, see sheets starting at E-400 series.
   - For cable block riser diagram, see sheets E-391K thru E-391N.
   - For typical camera and motion sensor details and conduit connections, see sheet E-391Z.
2. Electrical conduits shall enter the tower shafts between stiffeners A3 and A4 only for conduits going up or down inside the tower shafts between C1 and C2 only. For conduit entry details, see Structural Utility drawings.
3. All conduits and fittings routed exposed at grating shall be rigid galvanized steel, PVC coated.

REGISTERED PROFESSIONAL ENGINEER DAVID H. OTO No. 10699 Exp. 06/30/2013 ELECTRICAL STATE OF CALIFORNIA

(1) FOR REVISION ONLY

REQUEST FOR INFORMATION NOT ADDRESSED IN THIS CCO REMAIN IN FORCE

MARK	DATE	DESCRIPTIONS	BY	CH'D	CCO#
1	05/30/13	Install Base CCTV System	TW	RG	150S1
0	12/18/12	Install Base CCTV System	RM/TW JH	RG	150S1

REVISIONS

CONTRACT CHANGE ORDER NO. 150 S1
SHEET 49 OF 86

SAS SUPERSTRUCTURE MAIN TOWER T1
(BASE CCTV SYSTEM)
EL 53.85

SCALE AS NOTED

E-390A

THIS PLAN ACCURATE FOR ELECTRICAL WORK ONLY.

ALL DIMENSIONS ARE IN MILLIMETERS UNLESS OTHERWISE SHOWN

STATE OF CALIFORNIA - DEPARTMENT OF TRANSPORTATION
Caltrans

DESIGN OVERSIGHT: BEHZAD GOLEMOHAMMADI

CALCULATED/DESIGNED BY	JH	DATE 11/12	REVISED BY
CHECKED BY	RG	11/12	DATE REVISED

LAST REVISION 05-30-13 | DATE PLOTTED => 29-MAY-2013 | TIME PLOTTED => 14:36

DIST	COUNTY	ROUTE	KILOMETER POST TOTAL PROJECT	SHEET No	TOTAL SHEETS
04	SF	80	13.2/13.9	350 S37	1204

REGISTERED ELECTRICAL ENGINEER 11/26/12 DATE

11-29-12
PLANS APPROVAL DATE

REGISTERED PROFESSIONAL ENGINEER DAVID H. OTO No. 10699 Exp. 06/30/2013 ELECTRICAL STATE OF CALIFORNIA

PB AMERICAS, Inc.
A Parsons Brinckerhoff Company
303 Second St., Suite 700N
San Francisco, CA 94107-1317

The State of California or its officers or agents shall not be responsible for the accuracy or completeness of electronic copies of this plan sheet.

Caltrans now has a web site! To get to the web site, go to http://www.dot.ca.gov

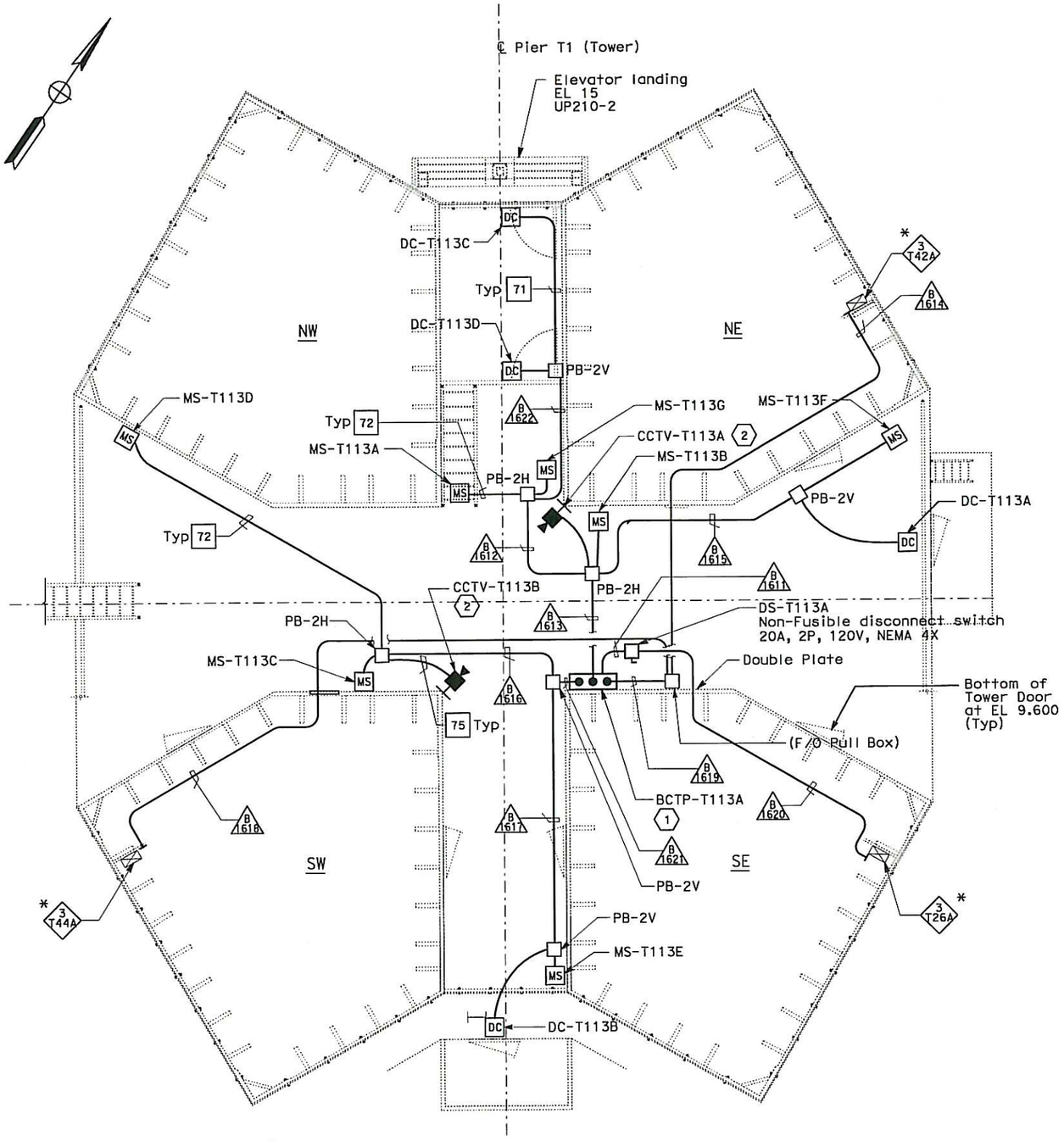

PLAN AT ELEV 13.0 m

NO SCALE

SHEET NOTES:

(1) Base Camera Transition Panel #BCTP-T113A 914 H x 762 W x 254 D.(See Detail 1, E-390E).

(2) For camera and conduit installation see E-391Y.

NOTES:

1. References:
   - For conduit and cable tray schedule, see sheets starting at E-400 series.
2. All conduits and fittings routed exposed at grating shall be rigid galvanized steel, PVC coated.

REQUEST FOR INFORMATION NOT ADDRESSED IN THIS CCO REMAIN IN FORCE

MARK	DATE	DESCRIPTIONS	BY	CH'D	CCO#
0	12/18/12	Install Base CCTV System	RM/TW JH	RG	150S1

REVISIONS

CONTRACT CHANGE ORDER NO. 150 S1
SHEET 50 OF 86

SAS SUPERSTRUCTURE MAIN TOWER T1
(BASE CCTV SYSTEM)
EL 13.00

SCALE AS NOTED

E-390B

DATE	JH	CALCULATED/ DESIGNED BY	REVISED BY
11/12	RG	CHECKED BY	DATE REVISED

DESIGN OVERSIGHT
BEHZAD GOLEMOHAMMADI

STATE OF CALIFORNIA - DEPARTMENT OF TRANSPORTATION
Caltrans

THIS PLAN ACCURATE FOR ELECTRICAL WORK ONLY.

FOR REDUCED PLANS ORIGINAL SCALE IS IN MILLIMETERS 0 20 40 60 80

DGN FILE =>04-0120f1_0350S37.dgn
USERNAME =>Llorico

CU 04251 | EA 0120F1

LAST REVISION 00-00-00
DATE PLOTTED => 18-DEC-2012
TIME PLOTTED => 17:25

DIST	COUNTY	ROUTE	KILOMETER POST TOTAL PROJECT	SHEET No	TOTAL SHEETS
04	SF	80	13.2/13.9	350 S39	1204

11/26/12
REGISTERED ELECTRICAL ENGINEER DATE

11-29-12
PLANS APPROVAL DATE

REGISTERED PROFESSIONAL ENGINEER DAVID H. OTO No. 10699 Exp. 06/30/2013 ELECTRICAL STATE OF CALIFORNIA

PB AMERICAS, Inc.
A Parsons Brinckerhoff Company
303 Second St., Suite 700N
San Francisco, CA 94107-1317

The State of California or its officers or agents shall not be responsible for the accuracy or completeness of electronic copies of this plan sheet.

Caltrans now has a web site! To get to the web site, go to http://www.dot.ca.gov

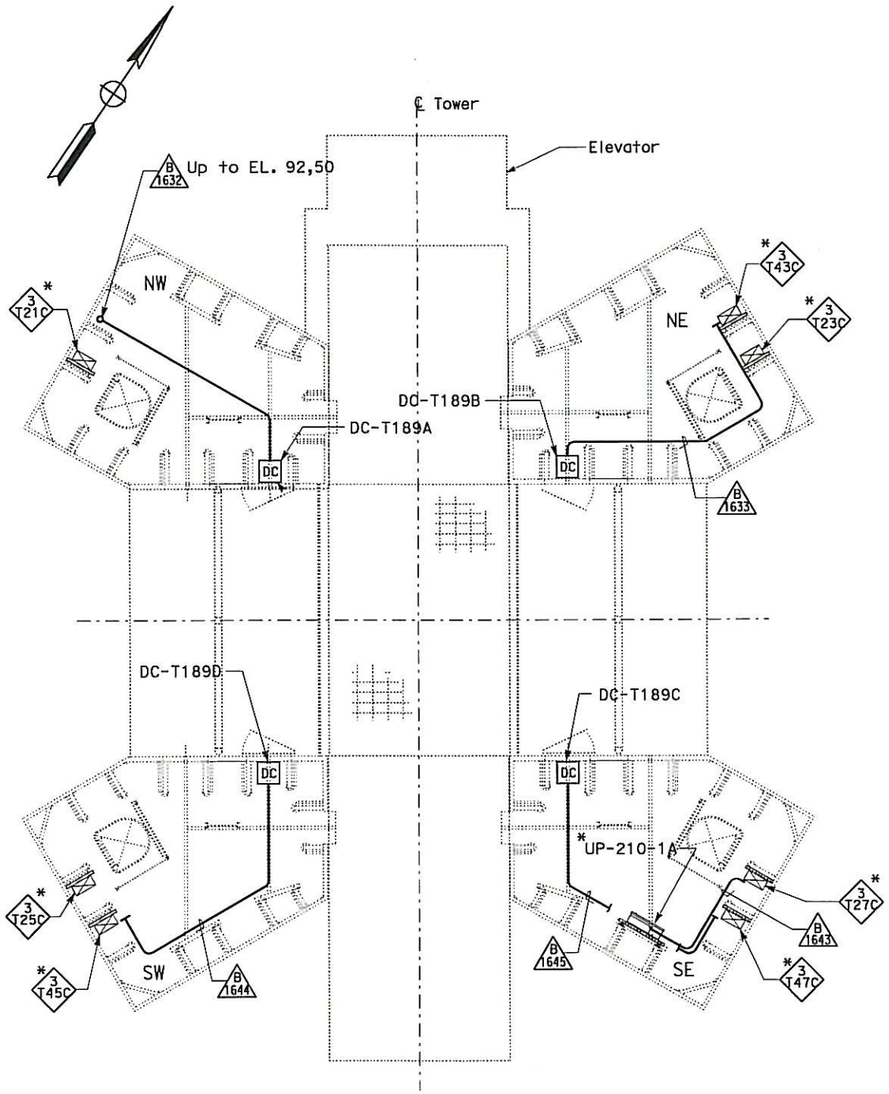

PLAN AT ELEVATION 89.85 m

SCALE: 1:40

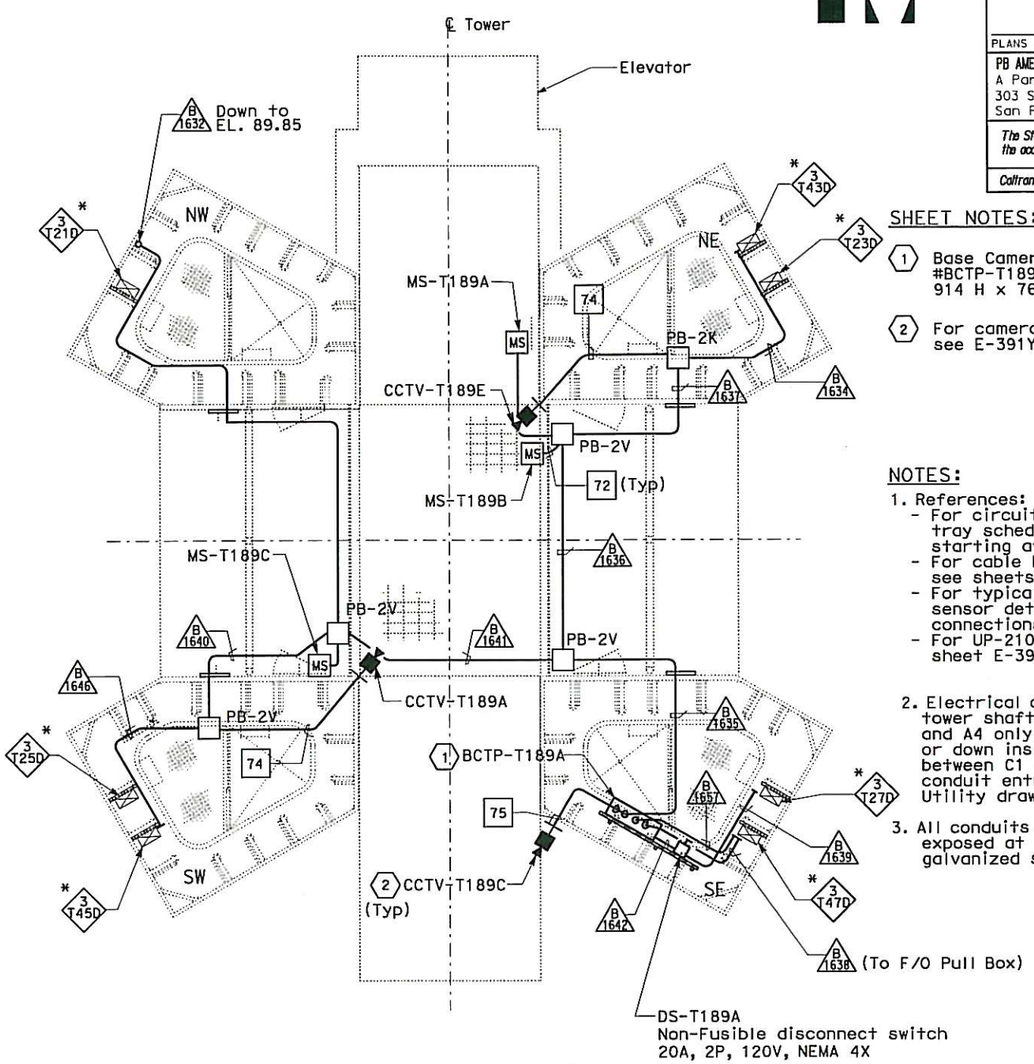

PLAN AT ELEVATION 92.50 m

SCALE: 1:40

SHEET NOTES:

1. Base Camera Transition Panel #BCTP-T189A (See Detail 1, E-390E) 914 H x 762 W x 254 D
2. For camera and conduit installation see E-391Y.

NOTES:

1. References:
   - For circuit and conduit/cable tray schedules, see sheets starting at E-400 series.
   - For cable block riser diagram, see sheets E-391K thru E-391N.
   - For typical camera and motion sensor details and conduit connections, see sheet E-391Z.
   - For UP-210 Panel Schedule see sheet E-390J.
2. Electrical conduits shall enter the tower shafts between stiffeners A3 and A4 only for conduits going up or down inside the tower shafts between C1 and C2 only. For conduit entry details, see Structural Utility drawings.
3. All conduits and fittings routed exposed at grating shall be rigid galvanized steel, PVC coated.

MARK	DATE	DESCRIPTIONS	BY	CH'D	CCO#
0	12/18/12	Install Base CCTV System	RM/TW JH	RG	150S1

REVISIONS

REQUEST FOR INFORMATION NOT ADDRESSED IN THIS CCO REMAIN IN FORCE

CONTRACT CHANGE ORDER NO. 150 S1
SHEET 51 OF 86

SAS SUPERSTRUCTURE MAIN TOWER T1
(BASE CCTV SYSTEM)
EL 89.85

SCALE: AS NOTED

E-390D

THIS PLAN ACCURATE FOR ELECTRICAL WORK ONLY.

FOR REDUCED PLANS ORIGINAL SCALE IS IN MILLIMETERS 0 20 40 60 80

DGN FILE =>04-0120f1_0350S39.dgn
USERNAME =>Llorico

CU 04251 | EA 0120F1

LAST REVISION 00-00-00 | DATE PLOTTED => 18-DEC-2012 TIME PLOTTED => 17:25

STATE OF CALIFORNIA - DEPARTMENT OF TRANSPORTATION
Caltrans

DESIGN OVERSIGHT: BEHZAD GOLEMOHAMMADI

CALCULATED/DESIGNED BY: JH | DATE 11/12 | REVISED BY
CHECKED BY: RG | 11/12 | DATE REVISED

DIST	COUNTY	ROUTE	KILOMETER POST TOTAL PROJECT	SHEET No	TOTAL SHEETS
04	SF	80	13.2/13.9	350 S40R1	1204

REGISTERED ELECTRICAL ENGINEER 11/26/12 DATE

11-29-12
PLANS APPROVAL DATE

REGISTERED PROFESSIONAL ENGINEER DAVID H. OTO No. 10699 Exp. 06/30/2013 ELECTRICAL STATE OF CALIFORNIA

PB AMERICAS, Inc.
A Parsons Brinckerhoff Company
303 Second St., Suite 700N
San Francisco, CA 94107-1317

The State of California or its officers or agents shall not be responsible for the accuracy or completeness of electronic copies of this plan sheet.

Caltrans now has a web site! To get to the web site, go to http://www.dot.ca.gov

Caltrans Metric

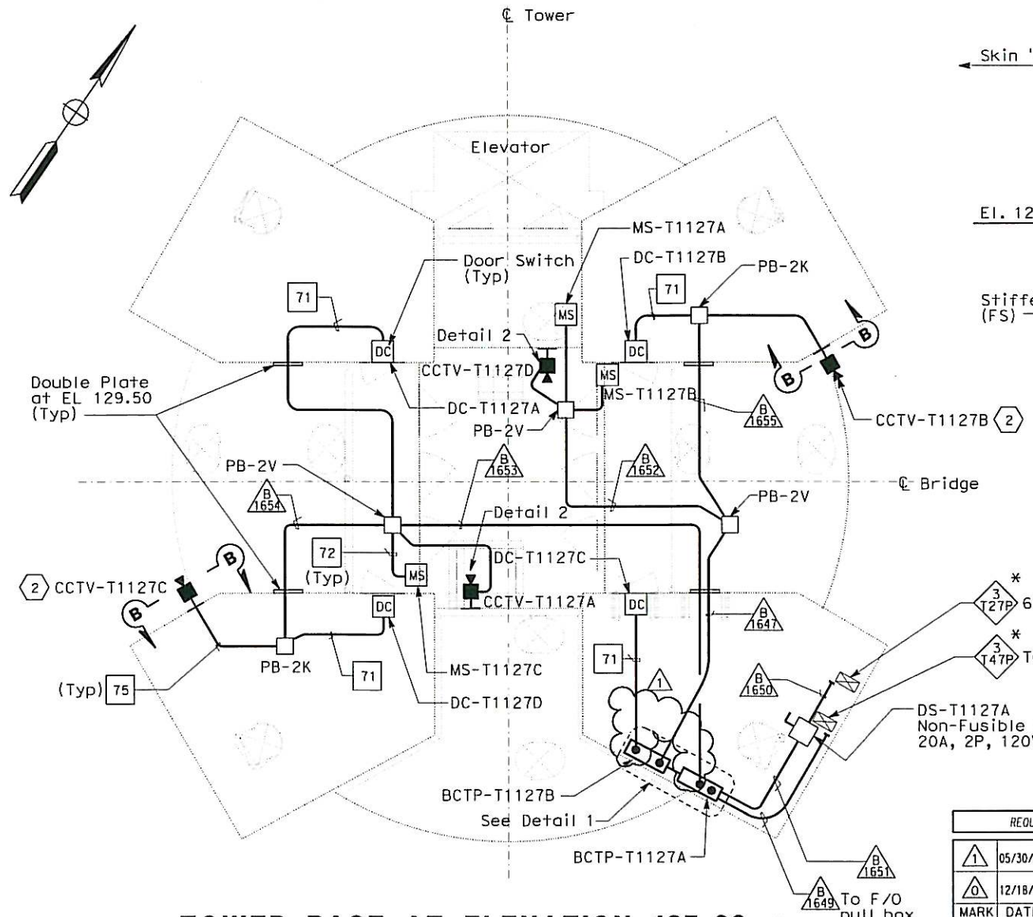

TOWER BASE AT ELEVATION 127.00 m

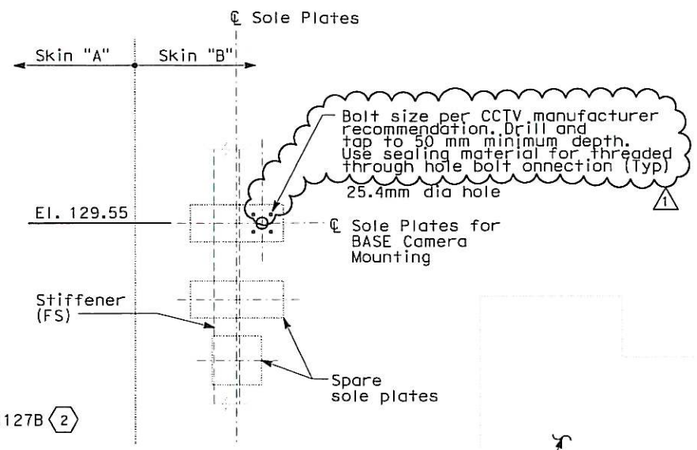

SECTION B-B
NO SCALE

REGISTERED PROFESSIONAL ENGINEER DAVID H. OTO No. 10699 Exp. 06/30/2013 ELECTRICAL STATE OF CALIFORNIA

FOR REVISION ONLY

SW Shaft

REQUEST FOR INFORMATION NOT ADDRESSED IN THIS CCO REMAIN IN FORCE					
1	05/30/13	Install Base CCTV System	TW	RG	150S1
0	12/18/12	Install Base CCTV System	RM/TW JH	RG	150S1
MARK	DATE	DESCRIPTIONS	BY	CH'D	CCO#
		REVISIONS			

CONTRACT CHANGE ORDER NO. 150 S1
SHEET 52 OF 86

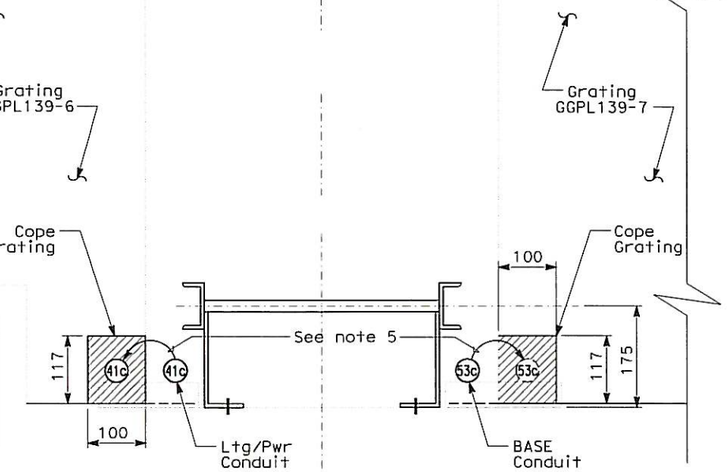

ELEVATION 143.00 m
NO SCALE

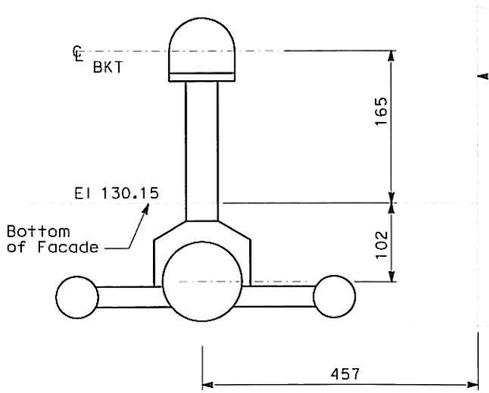

DETAIL 2
NO SCALE

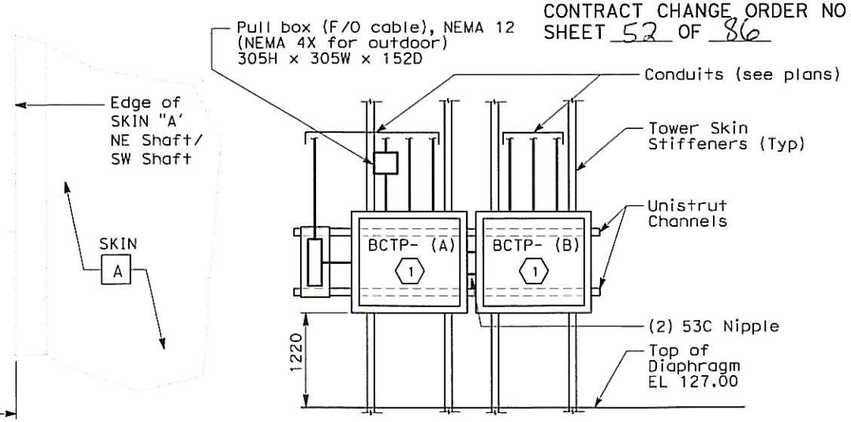

DETAIL 1
NO SCALE

Number of conduits varies. Conduit orientation to suit field condition, see plans. Similar detail for single BCTP.

SHEET NOTES:

1. Base Camera Transition Panel #BCTP-T1127A 914 H x 762 W x 254 D

   Same for #BCTP-T1127B

2. For camera and conduit installation, see E-391Y.

NOTES:

1. References:
   - For utility panel UP-210-1A panel schedule, see sheets E-390J.
   - For types of pull boxes, splice boxes and enclosures, see sheets E-83 and E-169.
   - For conduit and cable tray schedules, see sheets starting at E-400 series.
2. All conduits and fittings routed exposed at grating shall be rigid galvanized steel, PVC coated.
3. Electrical conduits shall enter the tower shafts between stiffeners A3 and A4 only. For conduit entry details, see Structural Utility drawings.
4. For other related work not shown on this sheet, see Electrical Special Provisions.
5. Move conduits to coping in gratings when provided.

SAS SUPERSTRUCTURE MAIN TOWER T1
(BASE CCTV SYSTEM)
EL 127.85
NO SCALE

THIS PLAN ACCURATE FOR ELECTRICAL WORK ONLY.

DESIGN OVERSIGHT: BEHZAD GOLEMOHAMMADI

CALCULATED/DESIGNED BY: RM | DATE 11/12 | REVISED BY
CHECKED BY: RG | 11/12 | DATE REVISED

STATE OF CALIFORNIA - DEPARTMENT OF TRANSPORTATION
Caltrans

LAST REVISION 05-30-13 | DATE PLOTTED => 29-MAY-2013 | TIME PLOTTED => 14:36

E-390E

DIST	COUNTY	ROUTE	KILOMETER POST TOTAL PROJECT	SHEET No	TOTAL SHEETS
04	SF	80	13.2/13.9	350 S41	1204

REGISTERED ELECTRICAL ENGINEER 11/26/12 DATE

PLANS APPROVAL DATE 11-29-12

REGISTERED PROFESSIONAL ENGINEER DAVID H. OTO No. 10699 Exp. 06/30/2013 ELECTRICAL STATE OF CALIFORNIA

PB AMERICAS, Inc.
A Parsons Brinckerhoff Company
303 Second St., Suite 700N
San Francisco, CA 94107-1317

The State of California or its officers or agents shall not be responsible for the accuracy or completeness of electronic copies of this plan sheet.

Caltrans now has a web site! To get to the web site, go to http://www.dot.ca.gov

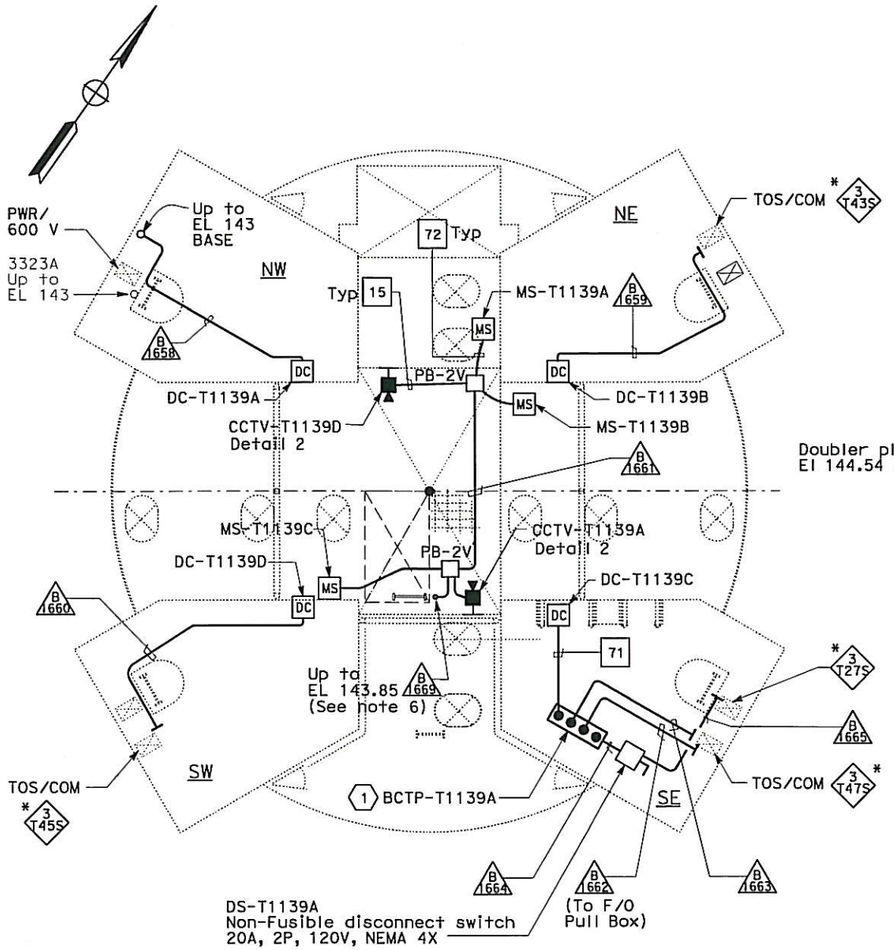

BASE TOWER EL 139.85
SCALE: 1:40

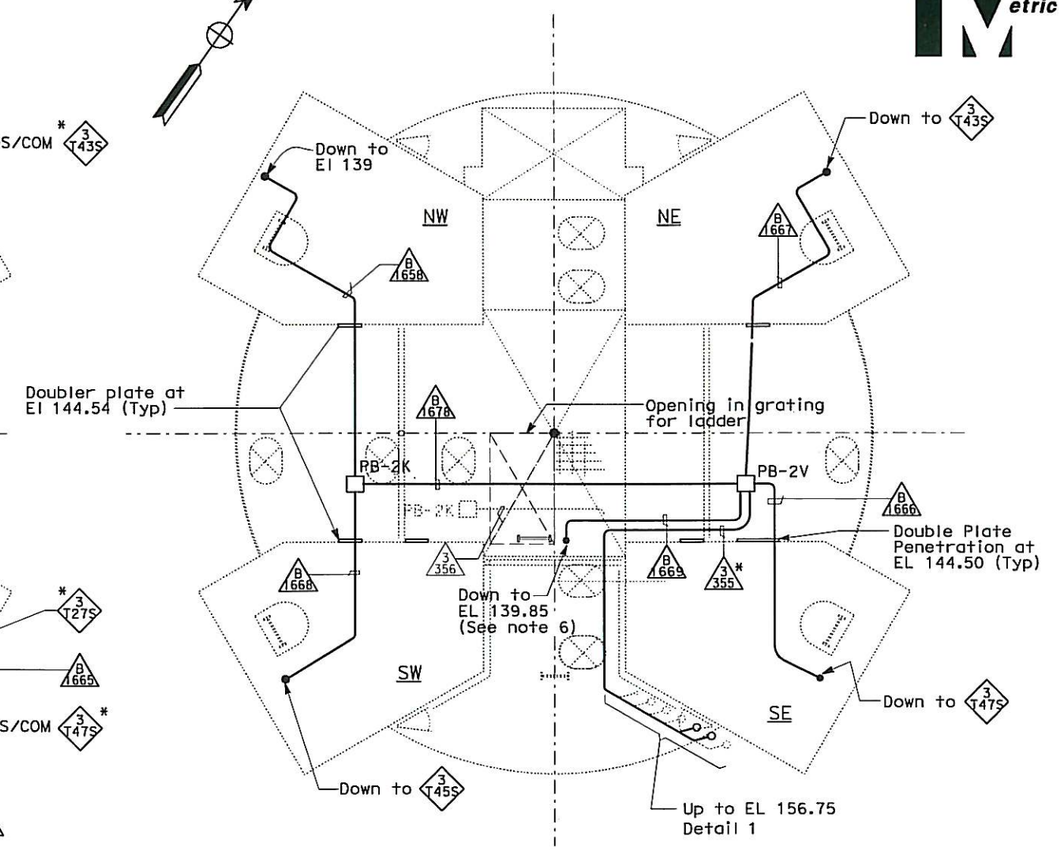

BASE TOWER EL 143.85
SCALE: 1:40

SHEET NOTES:

(1) Base Camera Transition Panel #BCTP-T1127A (See Detail 1, E-390E) 914 H x 762 W x 254 D

NOTES:

1. References:
   - For utility panels UP210-1A panel schedule see sheet E-390J.
   - For types of pull boxes, splice boxes and enclosures, see sheets E-83 and E-169.
   - For conduit and cable tray schedules, see sheets starting at E-400 series.
2. All conduits and fittings routed exposed at grating shall be rigid galvanized steel, PVC coated.
3. Electrical conduits shall enter the tower shafts between stiffeners A3 and A4 only. For conduit entry details, see Structural Utility drawings.
4. For other related work not shown on this sheet, see Electrical Special Provisions.
5. The contractor shall install pull box/ JB(s) along conduit runs to limit bends to be three (3) 90 degrees or fewer.
6. See Detail "Elevation 143.00 m" on sheet E-390E.

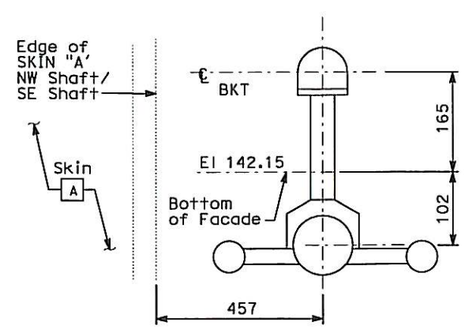

DETAIL 2
NO SCALE

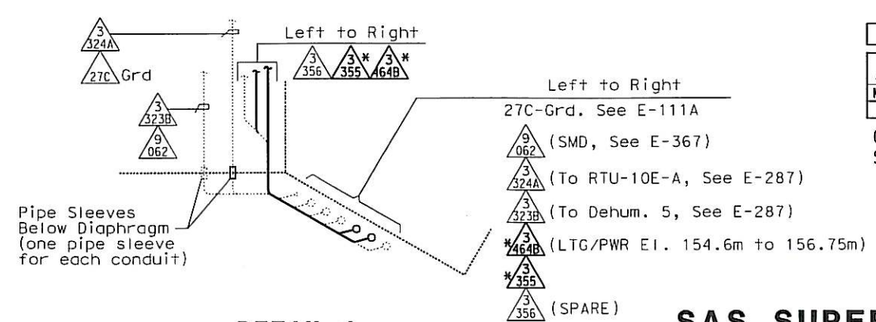

DETAIL 1
ELEVATION 156.75
(REF TO E-286)

REQUEST FOR INFORMATION NOT ADDRESSED IN THIS CCO REMAIN IN FORCE					
0	12/18/12	Install Base CCTV System	RM/TW JH	RG	150S1
MARK	DATE	DESCRIPTIONS	BY	CH'D	CCO#
		REVISIONS			

CONTRACT CHANGE ORDER NO. 150 S1
SHEET 53 OF 86

SAS SUPERSTRUCTURE MAIN TOWER T1 (BASE CCTV SYSTEM) EL. 139.85

SCALE AS SHOWN

E-390F

THIS PLAN ACCURATE FOR ELECTRICAL WORK ONLY.

FOR REDUCED PLANS ORIGINAL SCALE IS IN MILLIMETERS 0 20 40 60 80

DGN FILE =>04-0120f1_0350S41.dgn
USERNAME =>Llorico

CU 04251 | EA 0120F1

LAST REVISION 00-00-00 | DATE PLOTTED => 18-DEC-2012 | TIME PLOTTED => 17:25

STATE OF CALIFORNIA - DEPARTMENT OF TRANSPORTATION

DESIGN OVERSIGHT: BEHZAD GOLEMOHAMMADI

CALCULATED/DESIGNED BY: RM | DATE 11/12 | REVISED BY
CHECKED BY: RG | 11/12 | DATE REVISED

DIST	COUNTY	ROUTE	KILOMETER POST TOTAL PROJECT	SHEET No.	TOTAL SHEETS
04	SF	80	13.2/13.9	350 S42R1	1204

REGISTERED ELECTRICAL ENGINEER 11/26/12 DATE

11-29-12
PLANS APPROVAL DATE

PB AMERICAS, Inc.
A Parsons Brinckerhoff Company
303 Second St., Suite 700N
San Francisco, CA 94107-1317

REGISTERED PROFESSIONAL ENGINEER DAVID H. OTO No. 10699 Exp. 06/30/2013 ELECTRICAL STATE OF CALIFORNIA

The State of California or its officers or agents shall not be responsible for the accuracy or completeness of electronic copies of this plan sheet.

Caltrans now has a web site! To get to the web site, go to http://www.dot.ca.gov

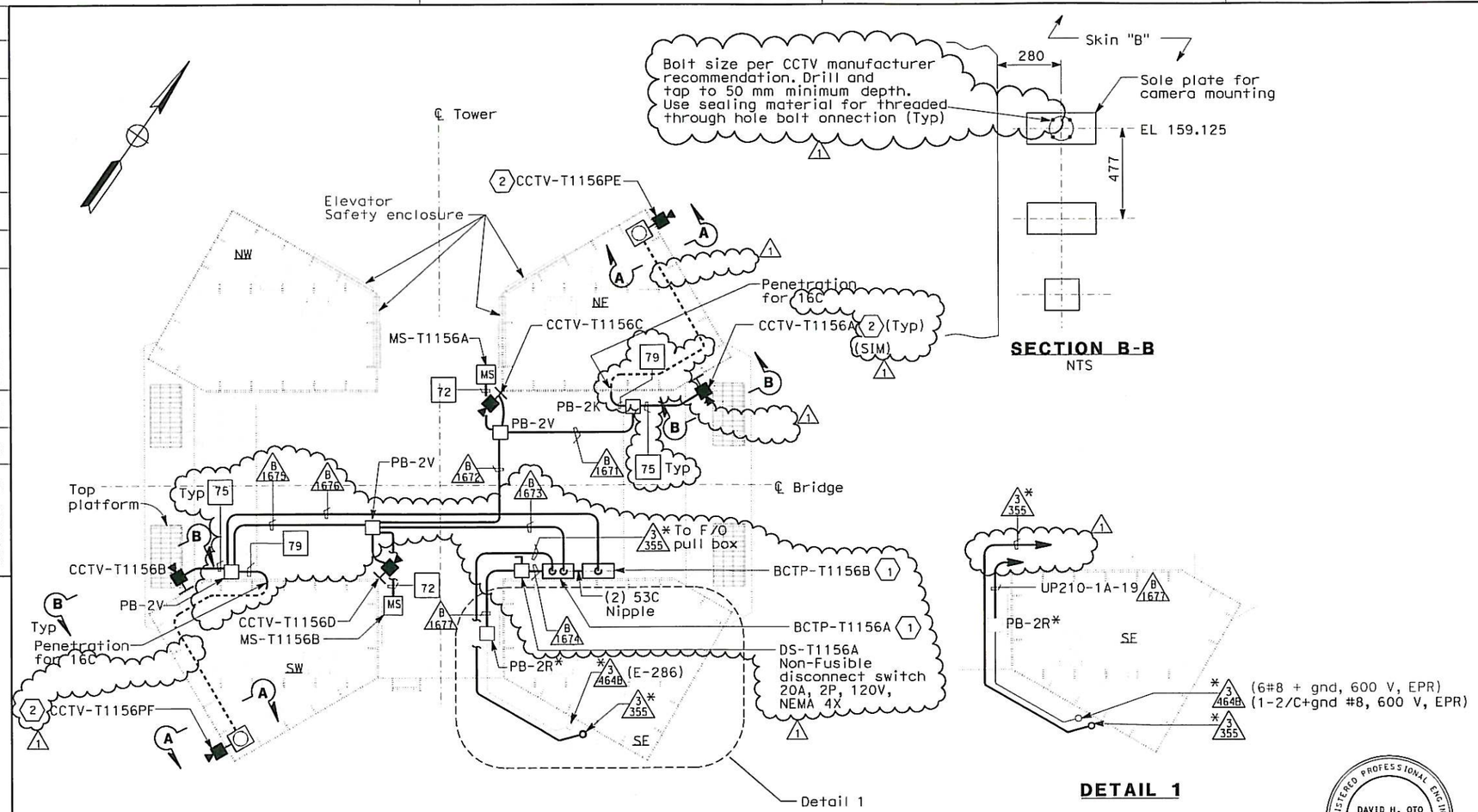

SECTION B-B
NTS

DETAIL 1

PLAN AT ELEVATIONS 154.6 m TO 160.00 m
(BASE TOWER HEAD)
SCALE: 1:40

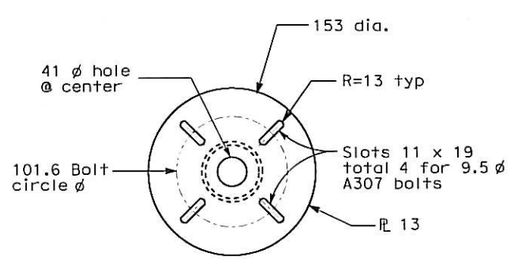

CAMERA MOUNTING PLATE - DETAIL 2
NOT TO SCALE

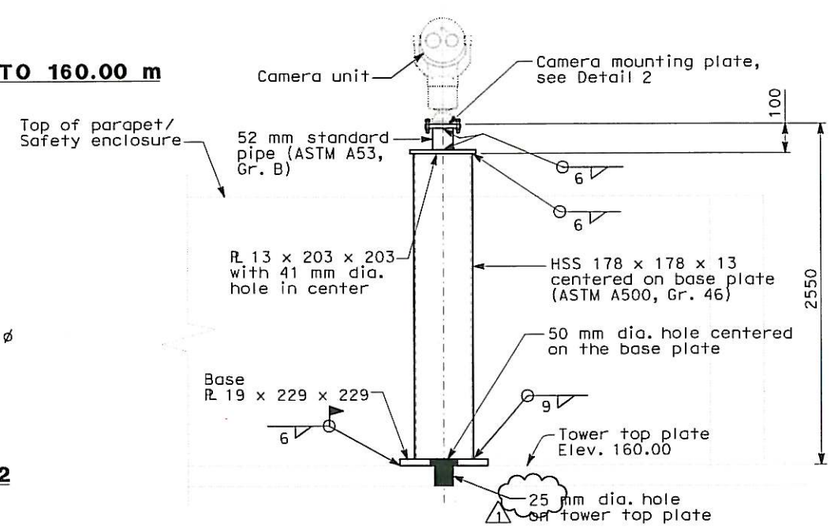

BASE CCTV PEDESTAL - SECTION A-A
NOT TO SCALE

SHEET NOTES:

(1) Base camera transition panel #BCTP-T1156A, 914 H x 762 W x 254 D See Detail 1, E-390E.

Same for #BCTP-T1156B

(2) For camera and conduit installation see E-391Y.

NOTES:

1. References:
   - For utility panel UP-210-1A panel schedule, see sheet E-390J.
   - For types of pull boxes, splice boxes and enclosures, see sheets E-83 and E-169.
   - For conduit and cable tray schedules, see sheets starting at E-400 series.
2. All conduits and fittings routed exposed at grating shall be rigid galvanized steel, PVC coated.
3. For other related work not shown on this sheet, see Electrical Special Provisions.
4. All structural steel shall be hot dipped galvanized after fabrication.

REGISTERED PROFESSIONAL ENGINEER DAVID H. OTO No. 10699 Exp. 06/30/2013 ELECTRICAL STATE OF CALIFORNIA

FOR REVISION ONLY (1)

REQUEST FOR INFORMATION NOT ADDRESSED IN THIS CCO REMAIN IN FORCE

MARK	DATE	DESCRIPTIONS	BY	CH'D	CCO#
1	05/30/13	Install Base CCTV System	TW	RG	150S1
0	12/18/12	Install Base CCTV System	RM/TW JH	RG	150S1

REVISIONS

CONTRACT CHANGE ORDER NO. 150 S1
SHEET 54 OF 86

SAS SUPERSTRUCTURE MAIN TOWER T1
(BASE CCTV SYSTEM)
EL 156.00
SCALE AS NOTED

E-390G

THIS PLAN ACCURATE FOR ELECTRICAL WORK ONLY.

ALL DIMENSIONS ARE IN MILLIMETERS UNLESS OTHERWISE SHOWN

FOR REDUCED PLANS ORIGINAL SCALE IS IN MILLIMETERS 0 20 40 60 80

DGN FILE => 04-0120F1_0350S42r01.dgn
USERNAME => Liorico

CU 04251 | EA 0120F1

DESIGN OVERSIGHT: BEHZAD GOLEMOHAMMADI

CALCULATED/DESIGNED BY | CHECKED BY | RM | DATE 11/12 | REVISED BY | DATE REVISED

STATE OF CALIFORNIA - DEPARTMENT OF TRANSPORTATION

LAST REVISION 05-30-13 | DATE PLOTTED => 29-MAY-2013 TIME PLOTTED => 14:36

DIST	COUNTY	ROUTE	KILOMETER POST TOTAL PROJECT	SHEET No	TOTAL SHEETS
04	SF	80	13.2/13.9	350 S43	1204

REGISTERED ELECTRICAL ENGINEER 11/26/12 DATE

PLANS APPROVAL DATE 11-29-12

REGISTERED PROFESSIONAL ENGINEER DAVID H. OTO No. 10699 Exp. 06/30/2013 ELECTRICAL STATE OF CALIFORNIA

PB AMERICAS, Inc.
A Parsons Brinckerhoff Company
303 Second St., Suite 700N
San Francisco, CA 94107-1317

The State of California or its officers or agents shall not be responsible for the accuracy or completeness of electronic copies of this plan sheet.

Caltrans now has a web site! To get to the web site, go to http://www.dot.ca.gov

UTILITY PANEL UP-210 (CKT #2123)

Location: PIER 1 TOWER AT PLATFORM ELEV 53.85 m

LOAD DESCRIPTION	LTG	REC	OTH.	CB		CB	LTG	REC	OTH.	LOAD DESCRIPTION
Spare				20/1	1 A 2	30/1	2145			Tower Base LTG (15) @ EL. 9.0 m
Fog Detection Panel FDP-5			2880	30/1	3 B 4	20/1		1440		Recept Tower Base (8) @ EL. 9.0 m
Sump Pump @ Elev 3.000 m Sump P-A			1440	20/1	5 C 6	30/1	2002			Tower Base LTG (14) @ EL. 9.0 m
Sump Pump @ Elev 3.000 m Sump P-B			1440	20/1	7 A 8	20/1		900		Recept Tower Base (5) @ EL. 9.0 m
Elevator Light & Fan			220	20/1	9 B 10	20/1	287			Platform LTG (7) @ EL. 53.85 m
Recept Platform (5) @ EL. 53.85 m		900		20/1	11 C 12	20/1			900	Strong Motion Recorder #3
SE Ltg.Tower Diaphragm (11) @ Elev 13.00 - 53.85 m	1573			20/1	13 A 14	20/1	1573			SW Ltg.Tower Diaphragm (11) @ Elev 13.00 - 53.85 m
NE Ltg.Tower Diaphragm (11) @ Elev 13.00 - 53.85 m	1573			20/1	15 B 16	20/1	1573			NW Ltg.Tower Diaphragm (11) @ Elev 13.00 - 53.85 m
Recept. (6) SE Tower Diaphragm @ Elev 13.00 - 53.85 m		1080		20/1	17 C 18	20/1		1080		Recept. (6) SW Tower Diaphragm @ Elev 13.00 - 53.85 m
Recept. (6) NE Tower Diaphragm @ Elev 13.00 - 53.85 m		1080		20/1	19 A 20	20/1		1080		Recept. (6) NW Tower Diaphragm @ Elev 13.00 - 53.85 m
Tower Base LTG (2) @ EL. 3.0 m	286			20/1	21 B 22	20/1	715			Tower Base LTG (5) @ EL. 3.0 m
(1) Recept (SW) Tower Base (2) @ EL. 3.0 m @ EL. 3.0 m BCTP-T13B		360		20/1	23 C 24	20/1		540		Recept NE Tower Base (3) @ EL. 3.0 m @ EL. 3.0 m BCTP-T13A (1)
BASE Camera Transition Panel BCTP-T113A			**1000**	20/1	25 A 26	20/1		180		Recept. (1) SW Tower Diaphragm @ Elev 9.00 m
BASE Camera Transition Panel BCTP-T13A			1000	20/1	27 B 28	20/1			150	RTU-10E-A NW Shaft @ Elev 158.00m
BASE Camera Transition Panel BCTP-T13B			1000	20/1	29 C 30	20/1			100	120VAC/24VDC Converter Unit NW @ Elev 158.00m
TOTAL VA	3432	3420	8980				8295	5220	1150	TOTAL VA

LOAD SUMMARY (INCLUDES .90PF) (VA)

Lighting (At 100%): 11727
Gen Use (1st 10 kVA AT 100% Plus 50% of remainder): 14385

TOTAL kVA: 30.497

BALANCE (kVA)

Phase A - 11.151
Phase B - 10.124
Phase C - 9.222

VOLTAGE: 208/120 V
PHASE/WIRES: 3-Phase, 4-Wire
BUS RATING: 100 A
MAIN: 100 A Frame
MOUNTING: Surface
K.A.I.C.: 10

FEEDER ENTRY: TOP RIGHT

THIS PLAN ACCURATE FOR ELECTRICAL WORK ONLY.

SHEET NOTES:

(1) Extend existing receptacle circuit at Elev. 13 m to Elev. 3 m.

NOTES:

1. Contractor shall add circuit schedules as shown.
2. References:
   - For conduit and cable tray schedules, see sheets starting at E-400 series.
   - For location of UP-210 see sheet E-390A.

REQUEST FOR INFORMATION NOT ADDRESSED IN THIS CCO REMAIN IN FORCE

MARK	DATE	DESCRIPTIONS	BY	CH'D	CCO#
0	12/18/12	Install Base CCTV System	RM/TW JH	RG	150S1

REVISIONS

CONTRACT CHANGE ORDER NO. 150 S1
SHEET 55 OF 86

DETAILS
SAS SUPERSTRUCTURE MAIN TOWER T1
PANEL SCHEDULE UP-210
(BASE CCTV SYSTEM)

NO SCALE

E-390H

REVISED BY	DATE REVISED
JH	11/12

CALCULATED/DESIGNED BY	CHECKED BY
RG	

DESIGN OVERSIGHT: BEHZAD GOLEMOHAMMADI

STATE OF CALIFORNIA - DEPARTMENT OF TRANSPORTATION

Caltrans

LAST REVISION 00-00-00 | DATE PLOTTED => 18-DEC-2012 | TIME PLOTTED => 17:26

FOR REDUCED PLANS ORIGINAL SCALE IS IN MILLIMETERS 0 20 40 60 80

DGN FILE =>04-0120f1_0350543.dgn
USERNAME =>Llorico

CU 04251 | EA 0120F1

DIST	COUNTY	ROUTE	KILOMETER POST TOTAL PROJECT	SHEET No	TOTAL SHEETS
04	SF	80	13.2/13.9	350 S44	1204

REGISTERED ELECTRICAL ENGINEER 11/26/12 DATE

11-29-12
PLANS APPROVAL DATE

REGISTERED PROFESSIONAL ENGINEER DAVID H. OTO No. 10699 Exp. 06/30/2013 ELECTRICAL STATE OF CALIFORNIA

PB AMERICAS, Inc.
A Parsons Brinckerhoff Company
303 Second St., Suite 700N
San Francisco, CA 94107-1317

The State of California or its officers or agents shall not be responsible for the accuracy or completeness of electronic copies of this plan sheet.

Caltrans now has a web site! To get to the web site, go to http://www.dot.ca.gov

UTILITY PANEL UP-210-1A (CKT #2123-2) Location: PIER 1 TOWER AT SE SHAFT PLATFORM ELEV 89.00 m

LOAD DESCRIPTION	LTG	REC	OTH.	CB		CB	LTG	REC	OTH.	LOAD DESCRIPTION
SE Ltg.Tower Diaphragm (15) @ Elev 89.00 - 143.00 m	2070			30/1	1 A 2	20/1				Spare
SE Ltg.Tower Diaphragm (12) @ Elev 53.00 - 89.00 m	1430			20/1	3 B 4	20/1		900		Recept. (5) SE Tower Diaphragm @ Elev 53.00 - 89.00 m
SW Ltg.Elect. Dist Equip. @ Elev 89.00 m	143			20/1	5 C 6	20/1		900		Recept. (5) SE Tower Diaphragm @ Elev 89.00 - 143.00 m
Spare				20/1	7 A 8	20/1				Spare
NE Ltg.Tower Diaphragm (12) @ Elev 53.00 - 89.00 m	1430			20/1	9 B 10	20/1		900		Recept. (5) NE Tower Diaphragm @ Elev 53.00 - 89.00 m
NE Ltg.Tower Diaphragm (15) @ Elev 89.00 - 143.00 m	2070			30/1	11 C 12	20/1		900		Recept. (5) NE Tower Diaphragm @ Elev 89.00 - 143.00 m
Platform Ltg. (24) @ Elev 154.6 m to 156.75 m	984			20/1	13 A 14	20/1		900		Recept. (5) Platform @ Elev 154.6 m to 156.75 m
BASE Camera Transition Panel BCTP-T153A			1000	20/1	15 B 16	20/1			1000	BASE Camera Transition Panel BCTP-T189A
BASE Camera Transition Panel BCTP-T1127A			1000	20/1	17 C 18	20/1			1000	BASE Camera Transition Panel BCTP-T1139A
BASE Camera Transition Panel BCTP-T1156A			1000	20/1	19 A 20	20/1				Spare
Spare				20/1	21 B 22	20/1				Spare
Spare				20/1	23 C 24	20/1				Spare
TOTAL VA	8127		3000					4500	2000	TOTAL VA

LOAD SUMMARY (INCLUDES .90 PF) (VA)

Lighting (At 100%): 8127
Gen Use (1st 10 kVA at 100% Plus 50% of remainder): 9500

BALANCE (kVA)

Phase A - 4.954
Phase B - 6.660
Phase C - 6.013

VOLTAGE: 208/120 V
PHASE/WIRES: 3-Phase, 4-Wire
BUS RATING: 100 A
MAIN: 100 AF
MOUNTING: Surface
K.A.I.C.: 10

TOTAL kVA: 17.627 FEEDER ENTRY: BOTTOM LEFT

NOTES:

1. Contractor shall add circuit schedules as shown.
2. References:
   - For conduit and cable tray schedules, see sheets starting at E-400 series.
   - For location of UP-210-1A see sheet E-390D.

REQUEST FOR INFORMATION NOT ADDRESSED IN THIS CCO REMAIN IN FORCE					
0	12/18/12	Install Base CCTV System	RM/TW JH	RG	150S1
MARK	DATE	DESCRIPTIONS	BY	CH'D	CCO#
REVISIONS					

CONTRACT CHANGE ORDER NO. 150 S1
SHEET 56 OF 86

DETAILS
SAS SUPERSTRUCTURE MAIN TOWER T1
PANEL SCHEDULE UP-210-1A
(BASE CCTV SYSTEM)

NO SCALE

E-390J

DATE	REVISED BY	DATE	REVISED
11/12	JH	11/12	RG

CALCULATED/DESIGNED BY JH
CHECKED BY RG

DESIGN OVERSIGHT
BEHZAD GOLEMOHAMMADI

STATE OF CALIFORNIA - DEPARTMENT OF TRANSPORTATION
Caltrans

THIS PLAN ACCURATE FOR ELECTRICAL WORK ONLY.

FOR REDUCED PLANS ORIGINAL SCALE IS IN MILLIMETERS 0 20 40 60 80

DGN FILE =>04-0120f1_0350S44.dgn
USERNAME =>Llorico

CU 04251 EA 0120F1

LAST REVISION 00-00-00
DATE PLOTTED => 18-DEC-2012
TIME PLOTTED => 17:26

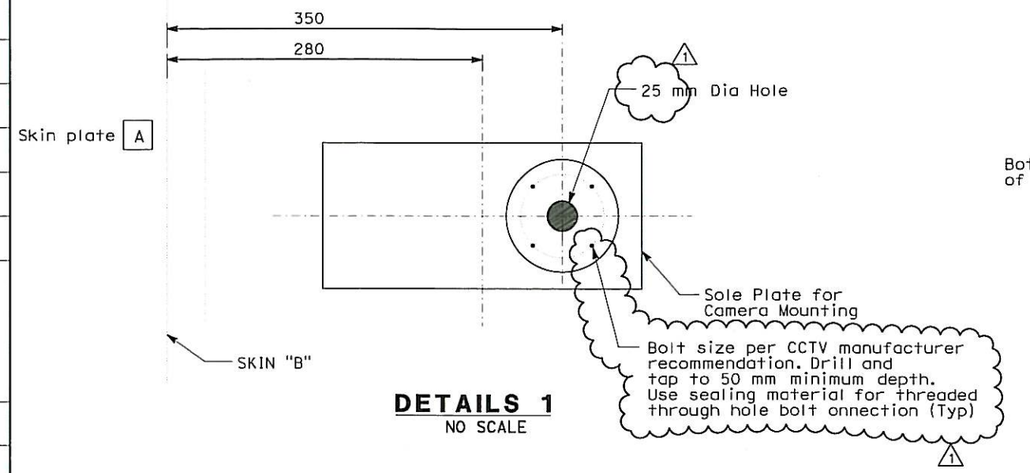

DETAILS 1
NO SCALE

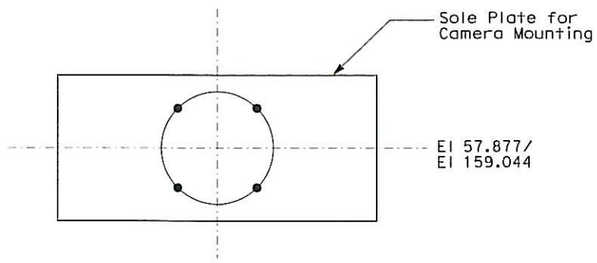

DETAILS 2
NO SCALE

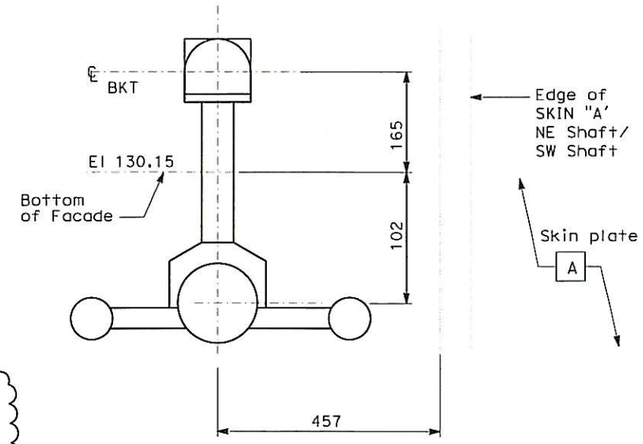

DETAILS 4
NO SCALE

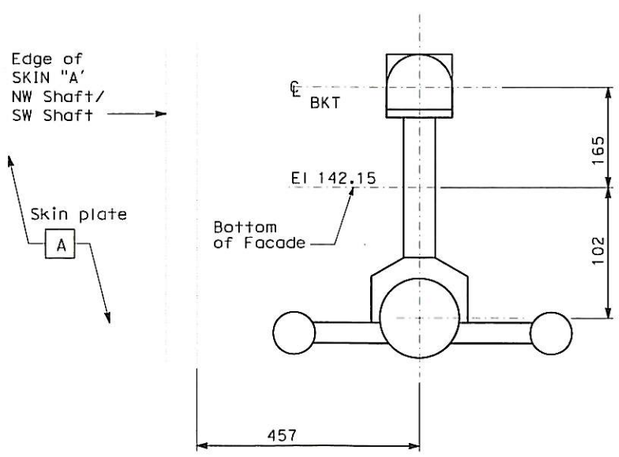

DETAILS 3
NO SCALE

Caltrans Metric

DIST	COUNTY	ROUTE	KILOMETER POST TOTAL PROJECT	SHEET No	TOTAL SHEETS
04	SF	80	13.2/13.9	350 S45R1	1204

REGISTERED ELECTRICAL ENGINEER 11/26/12 DATE

11-29-12
PLANS APPROVAL DATE

REGISTERED PROFESSIONAL ENGINEER DAVID H. OTO No. 10699 Exp. 06/30/2013 ELECTRICAL STATE OF CALIFORNIA

PB AMERICAS, Inc.
A Parsons Brinckerhoff Company
303 Second St., Suite 700N
San Francisco, CA 94107-1317

The State of California or its officers or agents shall not be responsible for the accuracy or completeness of electronic copies of this plan sheet.

Caltrans now has a web site! To get to the web site, go to http://www.dot.ca.gov

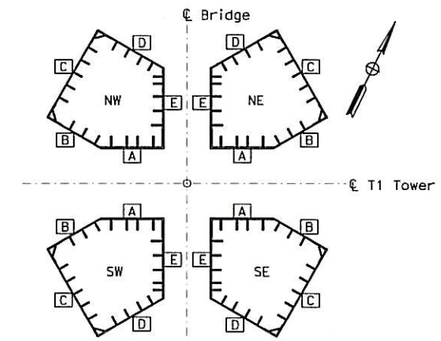

KEY PLAN

NOTES:

1. The dimensions for drilling are based on submittal drawings from the manufacturer and field notes. Contractor shall field verify all locations before actual drilling.
2. Sole Plates are existing.
3. All tower skins are viewed from outside.

REGISTERED PROFESSIONAL ENGINEER DAVID H. OTO No. 10699 Exp. 06/30/2013 ELECTRICAL STATE OF CALIFORNIA

FOR REVISION ONLY
1

REQUEST FOR INFORMATION NOT ADDRESSED IN THIS CCO REMAIN IN FORCE

MARK	DATE	DESCRIPTIONS	BY	CH'D	CCO#
1	05/30/13	Install Base CCTV System	TW	RG	150S1
0	12/18/12	Install Base CCTV System	RM	RG	150S1

REVISIONS

CONTRACT CHANGE ORDER NO. 150 S1
SHEET 57 OF 86

DETAILS
SAS SUPERSTRUCTURE MAIN TOWER T1
TOWER HOLE DRILLING PLAN
(BASE CCTV SYSTEM)
NO SCALE

E-390K

DESIGN OVERSIGHT	BEHZAD GOLEMOHAMMADI	CALCULATED/ DESIGNED BY	RM
		CHECKED BY	RG
		REVISED BY	DATE II/12
		DATE REVISED	II/12

STATE OF CALIFORNIA - DEPARTMENT OF TRANSPORTATION
Caltrans

LAST REVISION 05-30-13
DATE PLOTTED => 29-MAY-2013
TIME PLOTTED => 14:36

THIS PLAN ACCURATE FOR ELECTRICAL WORK ONLY.

ALL DIMENSIONS ARE IN MILLIMETERS UNLESS OTHERWISE SHOWN

FOR REDUCED PLANS ORIGINAL SCALE IS IN MILLIMETERS 0 20 40 60 80

DGN FILE =>04-0120f1_0350S45r01.dgn
USERNAME =>Llorico

EA 0120F1

DIST	COUNTY	ROUTE	KILOMETER POST TOTAL PROJECT	SHEET No	TOTAL SHEETS
04	SF	80	13.2/13.9	350 S46R1	1204

REGISTERED ELECTRICAL ENGINEER 11/26/12 DATE

PLANS APPROVAL DATE 11-29-12

REGISTERED PROFESSIONAL ENGINEER DAVID H. OTO No. 10699 Exp. 06/30/2013 ELECTRICAL STATE OF CALIFORNIA

PB AMERICAS, Inc.
A Parsons Brinckerhoff Company
303 Second St., Suite 700N
San Francisco, CA 94107-1317

The State of California or its officers or agents shall not be responsible for the accuracy or completeness of electronic copies of this plan sheet.

Caltrans now has a web site! To get to the web site, go to http://www.dot.ca.gov

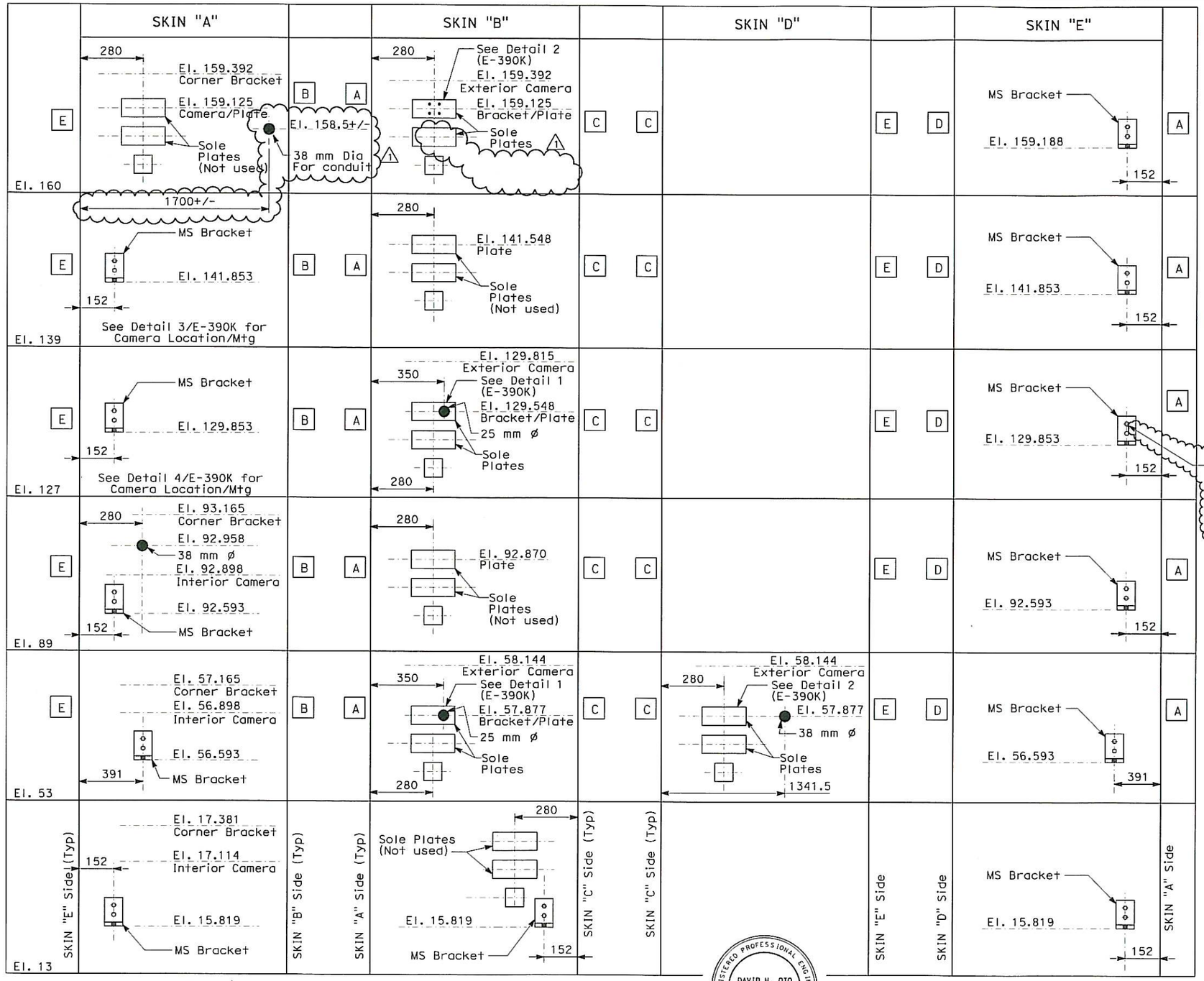

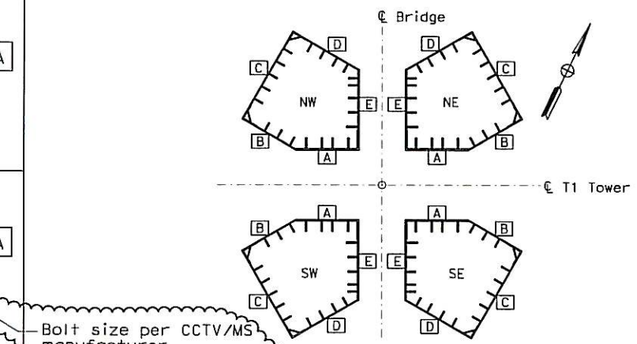

KEY PLAN

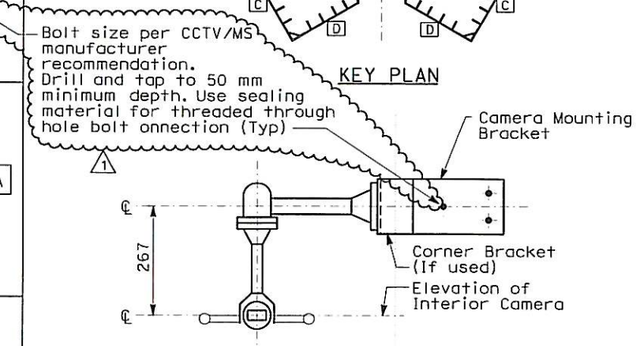

INTERIOR CAMERA CORNER MOUNTING

NOTES:

1. The dimensions for drilling are based on submittal drawings from the manufacturer and field notes. Contractor shall field verify all locations before actual drilling.
2. Sole Plates are existing.
3. All tower skins are viewed from outside.

REQUEST FOR INFORMATION NOT ADDRESSED IN THIS CCO REMAIN IN FORCE

MARK	DATE	DESCRIPTIONS	BY	CH'D	CCO#
1	05/30/13	Install Base CCTV System	TW	RG	150S1
0	12/18/12	Install Base CCTV System	RM	RG	150S1

REVISIONS

CONTRACT CHANGE ORDER NO. 150 S1
SHEET 58 OF 86

REGISTERED PROFESSIONAL ENGINEER DAVID H. OTO No. 10699 Exp. 06/30/2013 ELECTRICAL STATE OF CALIFORNIA

1 FOR REVISION ONLY

DETAILS
SAS SUPERSTRUCTURE MAIN TOWER T1
TOWER HOLE DRILLING PLAN - NE TOWER SHAFT
(BASE CCTV SYSTEM)

NO SCALE

E-390L

THIS PLAN ACCURATE FOR ELECTRICAL WORK ONLY.

FOR REDUCED PLANS ORIGINAL SCALE IS IN MILLIMETERS 0 20 40 60 80

DGN FILE =>04-0120f1_0350S46r01.dgn
USERNAME =>Llorico

CU 04251 EA 0120F1

DATE PLOTTED => 29-MAY-2013
TIME PLOTTED => 14:36

LAST REVISION 05-30-13

STATE OF CALIFORNIA - DEPARTMENT OF TRANSPORTATION
Caltrans

DESIGN OVERSIGHT BEHZAD GOLEMOHAMMADI

CALCULATED/DESIGNED BY RM RG
CHECKED BY
DATE II/12 II/12
REVISED BY DATE REVISED

DIST	COUNTY	ROUTE	KILOMETER POST TOTAL PROJECT	SHEET No.	TOTAL SHEETS
04	SF	80	13.2/13.9	350 S47R1	1204

REGISTERED ELECTRICAL ENGINEER 11/26/12 DATE

11-29-12
PLANS APPROVAL DATE

REGISTERED PROFESSIONAL ENGINEER DAVID H. OTO No. 10699 Exp. 06/30/2013 ELECTRICAL STATE OF CALIFORNIA

PB AMERICAS, Inc.
A Parsons Brinckerhoff Company
303 Second St., Suite 700N
San Francisco, CA 94107-1317

The State of California or its officers or agents shall not be responsible for the accuracy or completeness of electronic copies of this plan sheet.

Caltrans now has a web site! To get to the web site, go to http://www.dot.ca.gov

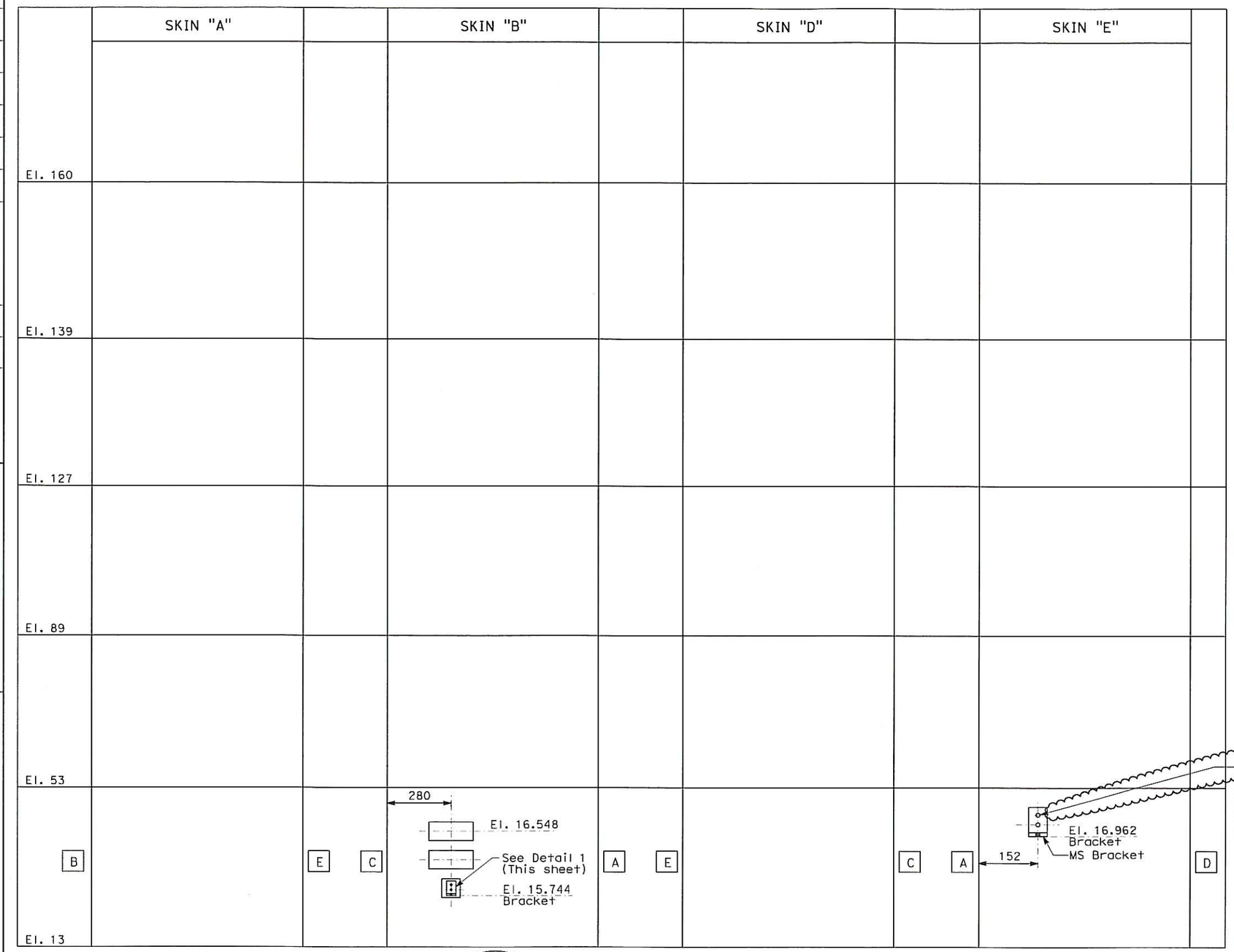

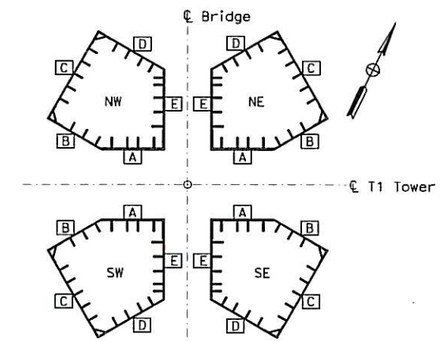

KEY PLAN

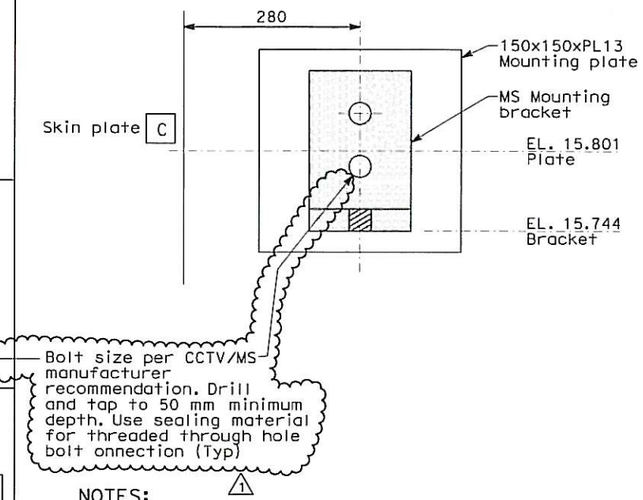

NOTES:

1. The dimensions for drilling are based on submittal drawings from the manufacturer and field notes. Contractor shall field verify all locations before actual drilling.
2. Sole Plates are existing.
3. All Tower skins are viewed from outside.

REGISTERED PROFESSIONAL ENGINEER DAVID H. OTO No. 10699 Exp. 06/30/2013 ELECTRICAL STATE OF CALIFORNIA

1 FOR REVISION ONLY

THIS PLAN ACCURATE FOR ELECTRICAL WORK ONLY.

REQUEST FOR INFORMATION NOT ADDRESSED IN THIS CCO REMAIN IN FORCE

MARK	DATE	DESCRIPTIONS	BY	CH'D	CCO#
1	05/30/13	Install Base CCTV System	TW	RG	150S1
0	12/18/12	Install Base CCTV System	RM	RG	150S1

REVISIONS

CONTRACT CHANGE ORDER NO. 150 S1
SHEET 59 OF 86

DETAILS
SAS SUPERSTRUCTURE MAIN TOWER T1
TOWER HOLE DRILLING PLAN - NW TOWER SHAFT
(BASE CCTV SYSTEM)

NO SCALE

E-390M

STATE OF CALIFORNIA - DEPARTMENT OF TRANSPORTATION
Caltrans

DESIGN OVERSIGHT: BEHZAD GOLEMOHAMMADI

CALCULATED/DESIGNED BY: RM — DATE 11/12 — REVISED BY
CHECKED BY: RG — DATE 11/12 — DATE REVISED

LAST REVISION 05-30-13
DATE PLOTTED => 29-MAY-2013
TIME PLOTTED => 14:36

FOR REDUCED PLANS ORIGINAL SCALE IS IN MILLIMETERS 0 20 40 60 80

DGN FILE =>04-0120f1_0350S47r01.dgn
USERNAME =>Llorica

CU 04251 | EA 0120F1

DIST	COUNTY	ROUTE	KILOMETER POST TOTAL PROJECT	SHEET No	TOTAL SHEETS
04	SF	80	13.2/13.9	350 S48R1	1204

REGISTERED ELECTRICAL ENGINEER 11/26/12 DATE

11-29-12
PLANS APPROVAL DATE

REGISTERED PROFESSIONAL ENGINEER DAVID H. OTO No. 10699 Exp. 06/30/2013 ELECTRICAL STATE OF CALIFORNIA

PB AMERICAS, Inc.
A Parsons Brinckerhoff Company
303 Second St., Suite 700N
San Francisco, CA 94107-1317

The State of California or its officers or agents shall not be responsible for the accuracy or completeness of electronic copies of this plan sheet.

Caltrans now has a web site! To get to the web site, go to http://www.dot.ca.gov

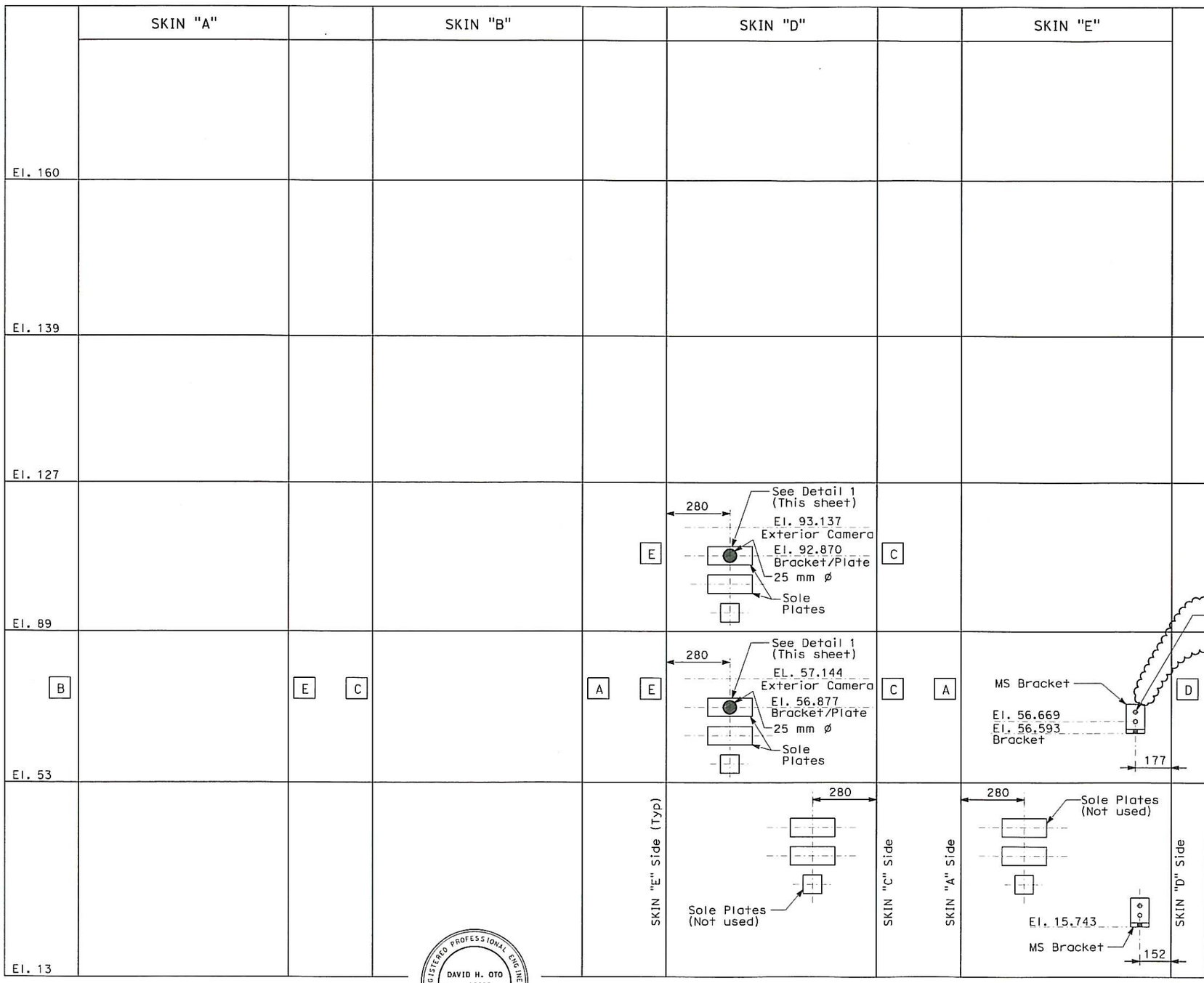

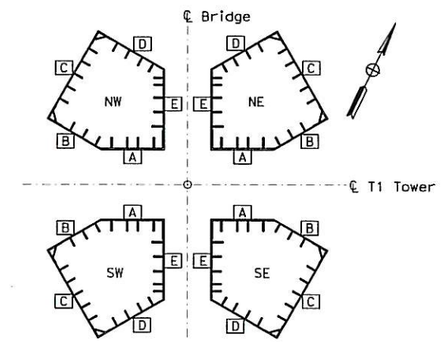

KEY PLAN

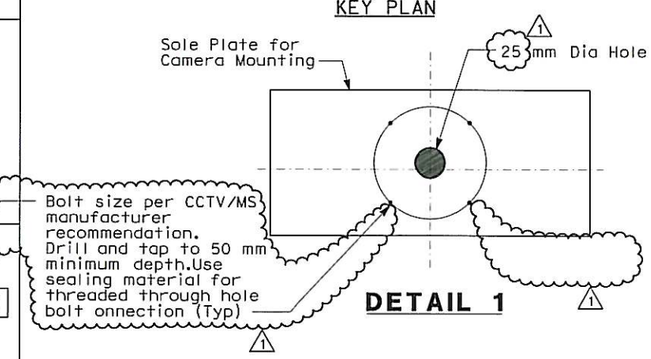

DETAIL 1

NOTES:

1. The dimensions for drilling are based on submittal drawings from the manufacturer and field notes. Contractor shall field verify all locations before actual drilling.
2. Sole Plates are existing.
3. All tower skins are viewed from outside.

REQUEST FOR INFORMATION NOT ADDRESSED IN THIS CCO REMAIN IN FORCE

MARK	DATE	DESCRIPTIONS	BY	CH'D	CCO#
1	05/30/13	Install Base CCTV System	TW	RG	150S1
0	12/18/12	Install Base CCTV System	RM	RG	150S1

REVISIONS

CONTRACT CHANGE ORDER NO. 150 S1
SHEET 60 OF 86

REGISTERED PROFESSIONAL ENGINEER DAVID H. OTO No. 10699 Exp. 06/30/2013 ELECTRICAL STATE OF CALIFORNIA

1 FOR REVISION ONLY

DETAILS
SAS SUPERSTRUCTURE MAIN TOWER T1
TOWER HOLE DRILLING PLAN - SE TOWER SHAFT
(BASE CCTV SYSTEM)

NO SCALE

E-390N

THIS PLAN ACCURATE FOR ELECTRICAL WORK ONLY.

STATE OF CALIFORNIA - DEPARTMENT OF TRANSPORTATION

DESIGN OVERSIGHT: BEHZAD GOLEMOHAMMADI

CALCULATED/DESIGNED BY: RM DATE 11/12
CHECKED BY: RG DATE 11/12

REVISED BY / DATE REVISED

LAST REVISION 05-30-13

DATE PLOTTED => 29-MAY-2013
TIME PLOTTED => 14:36

FOR REDUCED PLANS ORIGINAL SCALE IS IN MILLIMETERS 0 20 40 60 80

DGN FILE =>04-0120F1_0350S48R01.dgn
USERNAME =>Llorico

CU 04251

EA 0120F1

DIST	COUNTY	ROUTE	KILOMETER POST TOTAL PROJECT	SHEET No	TOTAL SHEETS
04	SF	80	13.2/13.9	350 S49R1	1204

REGISTERED ELECTRICAL ENGINEER 11/26/12 DATE

11-29-12
PLANS APPROVAL DATE

REGISTERED PROFESSIONAL ENGINEER DAVID H. OTO No. 10699 Exp. 06/30/2013 ELECTRICAL STATE OF CALIFORNIA

PB AMERICAS, Inc.
A Parsons Brinckerhoff Company
303 Second St., Suite 700N
San Francisco, CA 94107-1317

The State of California or its officers or agents shall not be responsible for the accuracy or completeness of electronic copies of this plan sheet.

Caltrans now has a web site! To get to the web site, go to http://www.dot.ca.gov

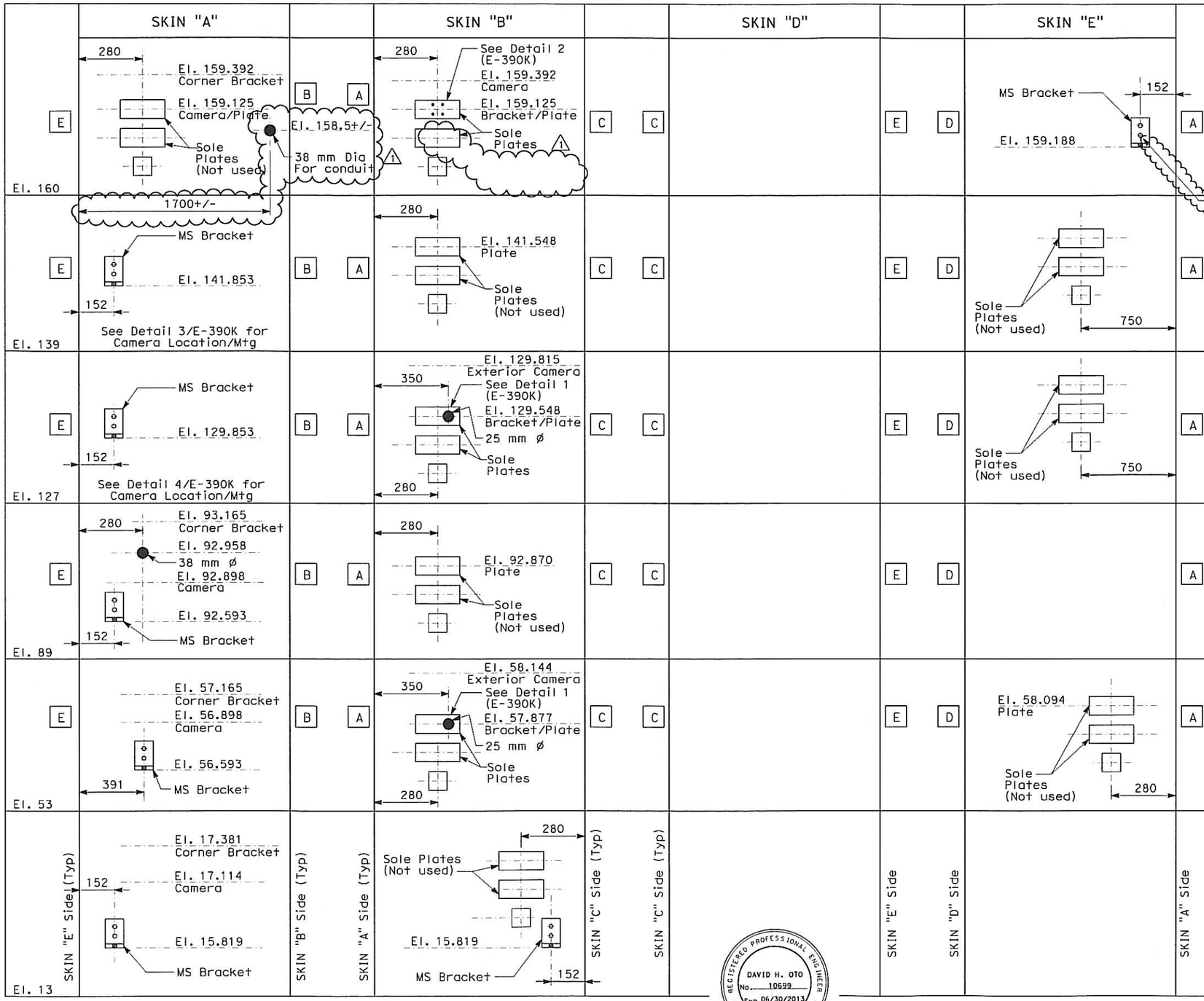

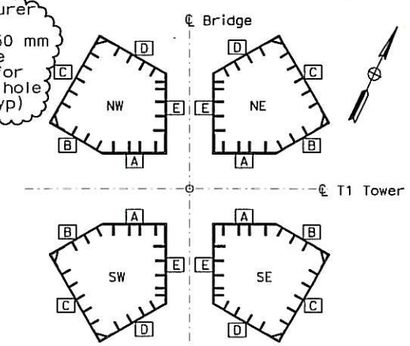

KEY PLAN

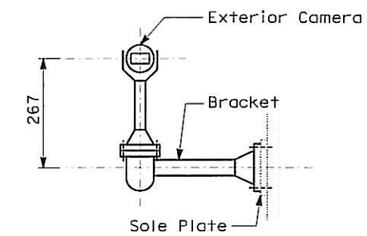

EXTERIOR CAMERA WALL MOUNTED

NOTES:

1. The dimensions for drilling are based on submittal drawings from the manufacturer and field notes. Contractor shall field verify all locations before actual drilling.
2. Sole Plates are existing.
3. All tower skins are viewed from outside.

REQUEST FOR INFORMATION NOT ADDRESSED IN THIS CCO REMAIN IN FORCE

MARK	DATE	DESCRIPTIONS	BY	CH'D	CCO#
1	05/30/13	Install Base CCTV System	TW	RG	150S1
0	12/18/12	Install Base CCTV System	RM	RG	150S1

REVISIONS

CONTRACT CHANGE ORDER NO. 150 S1
SHEET 61 OF 86

REGISTERED PROFESSIONAL ENGINEER DAVID H. OTO No. 10699 Exp. 06/30/2013 ELECTRICAL STATE OF CALIFORNIA

1 FOR REVISION ONLY

DETAILS
SAS SUPERSTRUCTURE MAIN TOWER T1
TOWER HOLE DRILLING PLAN - SW TOWER SHAFT
(BASE CCTV SYSTEM)

NO SCALE

E-390P

THIS PLAN ACCURATE FOR ELECTRICAL WORK ONLY.

STATE OF CALIFORNIA - DEPARTMENT OF TRANSPORTATION

DESIGN OVERSIGHT: BEHZAD GOLEMOHAMMADI

CALCULATED/DESIGNED BY: RM | DATE 11/12 | REVISED BY
CHECKED BY: RG | DATE 11/12 | DATE REVISED

LAST REVISION 05-30-13 | DATE PLOTTED => 29-MAY-2013 | TIME PLOTTED => 14:37

FOR REDUCED PLANS ORIGINAL SCALE IS IN MILLIMETERS 0 20 40 60 80

DGN FILE =>04-0120f1_0350S49r01.dgn
USERNAME =>Llorico

CU 04251 | EA 0120F1

Dist	COUNTY	ROUTE	POST MILES TOTAL PROJECT	SHEET No.	TOTAL SHEETS
04	SF	80	13.2/13.9	350 S50	1204

REGISTERED ELECTRICAL ENGINEER 11/26/12

11-29-12
PLANS APPROVAL DATE

REGISTERED PROFESSIONAL ENGINEER BEN EDALATI No. 14761 Exp. 6/2013 ELECTRICAL STATE OF CALIFORNIA

THE STATE OF CALIFORNIA OR ITS OFFICERS OR AGENTS SHALL NOT BE RESPONSIBLE FOR THE ACCURACY OR COMPLETENESS OF ELECTRONIC COPIES OF THIS PLAN SHEET.

Caltrans now has a web site! To get to the web site, go to http://www.dot.ca.gov

BASE DEVICE ID NUMBER	TYPE OF DEVICE (See Note 2)	DEVICE CONNECTION TO
CCTV-W2EA	CAMERA TYPE II	BCTP-W2E A
CCTV-W2EB	CAMERA TYPE II	BCTP-W2E A
CCTV-W2EC	CAMERA TYPE II	BCTP-W2E A
CCTV-W2ED	CAMERA TYPE II	BCTP-W2E B
CCTV-W2EE	CAMERA TYPE II	BCTP-W2E B
CCTV-W2WA	CAMERA TYPE II	BCP-W2
CCTV-W2WB	CAMERA TYPE II	BCP-W2
CCTV-W2WC	CAMERA TYPE II	BCP-W2
CCTV-W2WD	CAMERA TYPE II	BCP-W2
CCTV-W2WE	CAMERA TYPE II	BCP-W2
CCTV-SP4	CAMERA TYPE II	BCTP-SP4A
CCTV-P10312	CAMERA TYPE I	BCTP-SP4A
CCTV-P20311	CAMERA TYPE I	BCTP-SP4B
CCTV-P20E1	CAMERA TYPE I	BCTP-SP4B
CCTV-P20E3	CAMERA TYPE I	BCTP-SP4B
CCTV-SP5	CAMERA TYPE II	BCTP-SP5A
CCTV-SP6	CAMERA TYPE II	BCP-SP6
CCTV-SP7	CAMERA TYPE II	BCTP-SP7A
CCTV- SP8	CAMERA TYPE II	BCTP-SP8A
CCTV-P10321	CAMERA TYPE I	BCTP-SP8A
CCTV-P10322	CAMERA TYPE I	BCTP-SP8A
CCTV-P20322	CAMERA TYPE I	BCTP-SP8B
CCTV-P22E1	CAMERA TYPE I	BCTP-SP8B
CCTV-P22E3	CAMERA TYPE I	BCTP-SP8B
CCTV-E2WA	CAMERA TYPE II	BCTP-E2WA
CW-E2WA	CAMERA WASH	BCTP-E2WA
CCTV-E2WB	CAMERA TYPE II	BCTP-E2WA
CW -E2WB	CAMERA WASH	BCTP-E2WA
CCTV-E2EA	CAMERA TYPE II	BCTP-E2EA
CW-E2EA	CAMERA WASH	BCTP-E2EA
CCTV- E2EB	CAMERA TYPE II	BCTP-E2EA
CW - E2EB	CAMERA WASH	BCTP-E2EA
CCTV-E2EC	CAMERA TYPE II	BCTP-E2EA
CW - E2EC	CAMERA WASH	BCTP-E2EA

BASE DEVICE ID NUMBER	TYPE OF DEVICE (See Note 3)	DEVICE CONNECTION TO
MS-W2EB	MOTION SENSOR D	BCTP-W2E A
MS-W2EA	MOTION SENSOR D	BCTP-W2E A
MS-W2EC	MOTION SENSOR D	BCTP-W2E A
MS-W2ED	MOTION SENSOR D	BCTP-W2E A
MS-W2EE	MOTION SENSOR D	BCTP-W2E A
MS-W2EF	MOTION SENSOR D	BCTP-W2E B
MS-W2EG	MOTION SENSOR D	BCTP-W2E B
MS-E2WA	MOTION SENSOR D	BCTP-E2WA
MS-E2EA	MOTION SENSOR D	BCTP-E2EA
MS-W2WA	MOTION SENSOR D	BCP-W2
MS-W2WB	MOTION SENSOR D	BCP-W2
MS-W2WC	MOTION SENSOR D	BCP-W2
MS-W2WD	MOTION SENSOR D	BCP-W2
MS-W2WE	MOTION SENSOR D	BCP-W2
MS-W2WF	MOTION SENSOR D	BCP-W2
MS-W2WG	MOTION SENSOR D	BCP-W2
MS-SP4A	MOTION SENSOR E	BCTP-SP4A
MS-SP4B	MOTION SENSOR E	BCTP-SP4A
MS-SP4C	MOTION SENSOR E	BCTP-SP4A
MS-SP5A	MOTION SENSOR E	BCTP-SP5A
MS-SP5B	MOTION SENSOR E	BCTP-SP5A
MS-SP5C	MOTION SENSOR E	BCTP-SP5A
MS-SP6A	MOTION SENSOR E	BCP-SP6
MS-SP6B	MOTION SENSOR E	BCP-SP6
MS-SP6C	MOTION SENSOR E	BCP-SP6
MS-SP7A	MOTION SENSOR E	BCTP-SP7A
MS-SP7B	MOTION SENSOR E	BCTP-SP7A
MS-SP7C	MOTION SENSOR E	BCTP-SP7A
MS-SP8A	MOTION SENSOR E	BCTP-SP8A
MS-SPBB	MOTION SENSOR E	BCTP-SP8A
MS-SP8C	MOTION SENSOR E	BCTP-SP8A
DC-SP4A	DOOR CONTACT	BCTP-SP4A
DC-SP5A	DOOR CONTACT	BCTP-SP5A
DC-SP6A	DOOR CONTACT	BCP-SP6
DC-SP7A	DOOR CONTACT	BCTP-SP7A
DC-SP8A	DOOR CONTACT	BCTP-SP8A

NOTES:

1. References:
   - BCTP field wiring diagram, sheet E-391P to E-391U.
   - Cable block riser diagram, sheets E-391C to E-391N.

2. Description of BASE CCTV camera types:
   I - Optical Camera Unit
   II - Optical Camera Unit with Infrared (IR)
   III - Optical Camera Unit with thermal imaging (TH)

3. Description of motion sensor used with BASE CCTV camera unit:
   D - 90 degree wide field of view, H-lens.
   E - 40 degree narrow field of view, H-40 lens.
   F - 90 degree wide field of view, H-lens, Fluorescent filter.

REQUEST FOR INFORMATION NOT ADDRESSED IN THIS CCO REMAIN IN FORCE

MARK	DATE	DESCRIPTIONS	BY	CH'D	CCO#
0	12/18/12	Install Base CCTV System	RSB JH	RG	150S1

REVISIONS

CONTRACT CHANGE ORDER NO. 150 S1
SHEET 62 OF 86

DETAILS
(BASE CCTV SYSTEM)
DEVICE SCHEDULE
NO SCALE

E-391A

THIS PLAN ACCURATE FOR ELECTRICAL WORK ONLY.

STATE OF CALIFORNIA - DEPARTMENT OF TRANSPORTATION

DESIGN OVERSIGHT: BEHZAD GOLEMOHAMMADI

CALCULATED/DESIGNED BY: JV | DATE 11/12
CHECKED BY: JH/RG | 11/12

REVISED BY | DATE REVISED

LAST REVISION 00-00-00 | DATE PLOTTED => 18-DEC-2012 | TIME PLOTTED => 17:26

FOR REDUCED PLANS ORIGINAL SCALE IS IN MILLIMETERS 0 20 40 60 80

DGN FILE =>04-0120f1_0350S50.dgn
USERNAME =>Llorico

CU 04251 | EA 0120F1

BASE DEVICE ID NUMBER	TYPE OF DEVICE (See Note 2)	DEVICE CONNECTION TO
CCTV-T13PA	CAMERA TYPE II	BCTP-T13A
CW-T13A	CAMERA WASH	BCTP-T13A
CCTV-T13PB	CAMERA TYPE III	BCTP-T13A
CW-T13B	CAMERA WASH	BCTP-T13A
CCTV-T13PC	CAMERA TYPE II	BCTP-T13B
CW-T13C	CAMERA WASH	BCTP-T13B
CCTV-T13PD	CAMERA TYPE III	BCTP-T13B
CW-T13D	CAMERA WASH	BCTP-T13B
CCTV-T113A	CAMERA TYPE II	BCTP-T113A
CCTV-T113B	CAMERA TYPE II	BCTP-T113A
CCTV-T153A	CAMERA TYPE II	BCTP-T153B
CCTV-T153B	CAMERA TYPE I	BCTP-T153A
CCTV-T153C	1 CAMERA TYPE I	BCTP-T153A
CCTV-T153D	CAMERA TYPE II	BCTP-T153B
CCTV-T153E	CAMERA TYPE I	BCTP-T153B
CCTV-T153F	CAMERA TYPE II	BCTP-T153A
CCTV-T189A	CAMERA TYPE II	BCTP-T189A
CCTV-T189C	CAMERA TYPE I	BCTP-T189A
CCTV-T189E	CAMERA TYPE II	BCTP-T189A
CCTV-T1127A	CAMERA TYPE II	BCTP-T1127A
CCTV-T1127B	CAMERA TYPE I	BCTP-T1127B
CCTV-T1127C	CAMERA TYPE I	BCTP-T1127A
CCTV-T1127D	CAMERA TYPE II	BCTP-T1127B
CCTV-T1139A	CAMERA TYPE II	BCTP-T1139A
CCTV-T1139D	CAMERA TYPE II	BCTP-T1139A
CCTV-T1156A	CAMERA TYPE I	BCTP-T1156B
CCTV-T1156B	CAMERA TYPE I	BCTP-T1156B
CCTV-T1156C	CAMERA TYPE II	BCTP-T1156A
CCTV-T1156D	CAMERA TYPE II	BCTP-T1156A
CCTV-T1156PE	CAMERA TYPE III	BCTP-T1156A
CCTV-T1156PF	CAMERA TYPE III	BCTP-T1156B

BASE DEVICE ID NUMBER	TYPE OF DEVICE (See Note 3)	DEVICE CONNECTION TO
MS-T13AA	MOTION SENSOR E	BCTP-T13A
MS-T13AB	MOTION SENSOR E	BCTP-T13A
MS-T13AC	MOTION SENSOR D	BCTP-T13A
MS-T13BA	MOTION SENSOR E	BCTP-T13A
MS-T13BB	MOTION SENSOR E	BCTP-T13A
MS-T13BC	MOTION SENSOR D	BCTP-T13A
MS-T13CA	MOTION SENSOR E	BCTP-T13B
MS-T13CB	MOTION SENSOR E	BCTP-T13B
MS-T13CC	MOTION SENSOR D	BCTP-T13B
MS-T13DA	MOTION SENSOR E	BCTP-T13B
MS-T13DB	MOTION SENSOR E	BCTP-T13B
MS-T13DC	MOTION SENSOR D	BCTP-T13B
MS-T113A	MOTION SENSOR F	BCTP-T113A
MS-T113B	MOTION SENSOR F	BCTP-T113A
MS-T113C	MOTION SENSOR F	BCTP-T113A
MS-T113D	MOTION SENSOR F	BCTP-T113A
MS-T113E	MOTION SENSOR F	BCTP-T113A
MS-T113F	MOTION SENSOR F	BCTP-T113A
MS-T113G	MOTION SENSOR F	BCTP-T113A
MS-T153A	MOTION SENSOR F	BCTP-T153A
MS-T153B	MOTION SENSOR F	BCTP-T153A
MS-T153C	MOTION SENSOR F	BCTP-T153B
MS-T153D	MOTION SENSOR F	BCTP-T153B
MS-T189A	MOTION SENSOR F	BCTP-T189A
MS-T189B	MOTION SENSOR F	BCTP-T189A
MS-T189C	MOTION SENSOR F	BCTP-T189A
MS-T1127A	MOTION SENSOR F	BCTP-T1127B
MS-T1127B	MOTION SENSOR F	BCTP-T1127B
MS-T1127C	MOTION SENSOR F	BCTP-T1127A
MS-T1139A	MOTION SENSOR F	BCTP-T1139A
MS-T1139B	MOTION SENSOR F	BCTP-T1139A
MS-T1139C	MOTION SENSOR F	BCTP-T1139A
MS-T1156A	MOTION SENSOR F	BCTP-T1156A
MS-T1156B	MOTION SENSOR F	BCTP-T1156A

BASE DEVICE ID NUMBER	TYPE OF DEVICE	DEVICE CONNECTION TO
DC-T113A	DOOR CONTACT	BCTP-T113A
DC-T113B	DOOR CONTACT	BCTP-T113A
DC-T113C	DOOR CONTACT	BCTP-T113A
DC-T113D	DOOR CONTACT	BCTP-T113A
DC-T153A	DOOR CONTACT	BCTP-T153B
DC-T153B	DOOR CONTACT	BCTP-T153A
DC-T153C	DOOR CONTACT	BCTP-T153B
DC-T153D	DOOR CONTACT	BCTP-T153B
DC-T189A	DOOR CONTACT	BCTP-T189A
DC-T189B	DOOR CONTACT	BCTP-T189A
DC-T189C	DOOR CONTACT	BCTP-T189A
DC-T189D	DOOR CONTACT	BCTP-T189A
DC-T1127A	DOOR CONTACT	BCTP-T1127A
DC-T1127B	DOOR CONTACT	BCTP-T1127B
DC-T1127C	DOOR CONTACT	BCTP-T1127A
DC-T1127D	DOOR CONTACT	BCTP-T1127A
DC-T1139A	DOOR CONTACT	BCTP-T1139A
DC-T1139B	DOOR CONTACT	BCTP-T1139A
DC-T1139C	DOOR CONTACT	BCTP-T1139A
DC-T1139D	DOOR CONTACT	BCTP-T1139A

Caltrans Metric

Dist	COUNTY	ROUTE	POST MILES TOTAL PROJECT	SHEET No.	TOTAL SHEETS
04	SF	80	13.2/13.9	350 S51R1	1204

REGISTERED ELECTRICAL ENGINEER 11/26/12

11-29-12
PLANS APPROVAL DATE

REGISTERED PROFESSIONAL ENGINEER ELECTRICAL No. 14761 Exp. 6/2013 STATE OF CALIFORNIA

THE STATE OF CALIFORNIA OR ITS OFFICERS OR AGENTS SHALL NOT BE RESPONSIBLE FOR THE ACCURACY OR COMPLETENESS OF ELECTRONIC COPIES OF THIS PLAN SHEET.

Caltrans now has a web site! To get to the web site, go to http://www.dot.ca.gov

NOTES:

1. References:
   - BCTP field wiring diagram, sheet E-391R, E-391T and E-391U.
   - Cable block riser diagram, sheets E-391K to E-391N.
2. Description of BASE CCTV camera types:
   I - Optical Camera Unit
   II - Optical Camera Unit with Infrared (IR)
   III - Optical Camera Unit with thermal imaging (TH)
3. Description of motion sensor used with BASE CCTV camera unit:
   D - 90 degree wide field of view, H-lens.
   E - 40 degree narrow field of view, H-40 lens.
   F - 90 degree wide field of view, H-lens, Fluorescent filter.

REGISTERED PROFESSIONAL ENGINEER DAVID H. OTO No. 10699 Exp. 06/30/2013 ELECTRICAL STATE OF CALIFORNIA

1 FOR REVISION ONLY

REQUEST FOR INFORMATION NOT ADDRESSED IN THIS CCO REMAIN IN FORCE

MARK	DATE	DESCRIPTIONS	BY	CH'D	CCO#
1	05/30/13	Install Base CCTV System	RB	RG	150S1
0	12/18/12	Install Base CCTV System	RB JH	RG	150S1

REVISIONS

CONTRACT CHANGE ORDER NO. 150 S1
SHEET 63 OF 86

DETAILS
(BASE CCTV SYSTEM)
DEVICE SCHEDULE
NO SCALE

E-391B

DATE	REVISED BY	DATE REVISED
JV 11/12	JH/RG	11/12

CALCULATED/DESIGNED BY
CHECKED BY

DESIGN OVERSIGHT
BEHZAD GOLEMOHAMMADI

STATE OF CALIFORNIA - DEPARTMENT OF TRANSPORTATION
Caltrans

THIS PLAN ACCURATE FOR ELECTRICAL WORK ONLY.

LAST REVISION 05-30-13
DATE PLOTTED => 29-MAY-2013
TIME PLOTTED => 14:37

Dist	COUNTY	ROUTE	POST MILES TOTAL PROJECT	SHEET No.	TOTAL SHEETS
04	SF	80	13.2/13.9	350 S52	1204

REGISTERED ELECTRICAL ENGINEER 11/26/12

PLANS APPROVAL DATE 11-29-12

REGISTERED PROFESSIONAL ENGINEER BEN EDALATI No. 14761 Exp. 6/2013 ELECTRICAL STATE OF CALIFORNIA

THE STATE OF CALIFORNIA OR ITS OFFICERS OR AGENTS SHALL NOT BE RESPONSIBLE FOR THE ACCURACY OR COMPLETENESS OF ELECTRONIC COPIES OF THIS PLAN SHEET.

Caltrans now has a web site! To get to the web site, go to http://www.dot.ca.gov

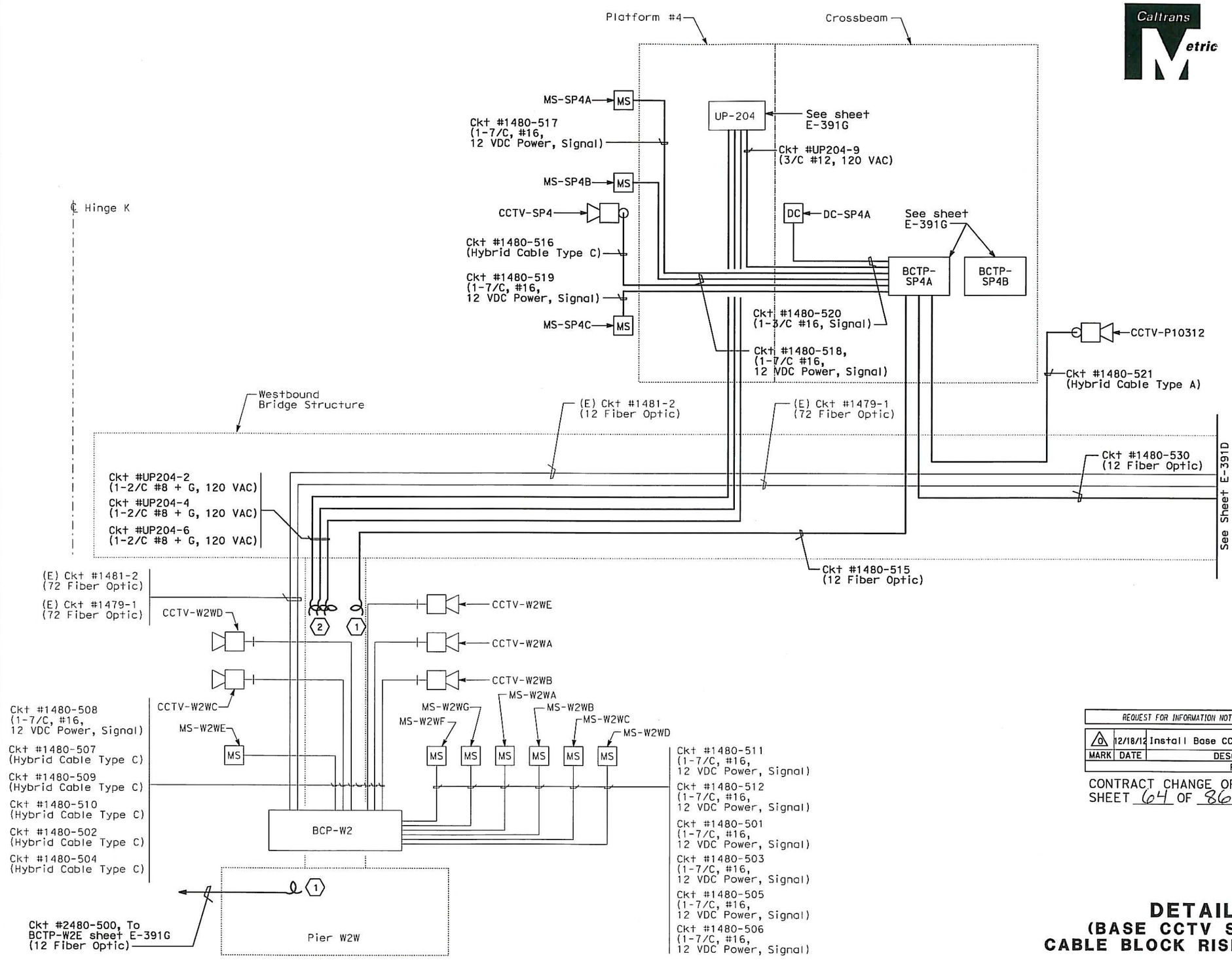

SHEET NOTES:

1. Coil 10 m inside TOS/COM Pull Box A4.
2. Coil 2 m inside 600 V Pull Box A23.

NOTES:

1. Reference:
   - For circuit and conduit/cable tray schedules, see sheets starting at E-400 series.
   - For Fiber Optic termination, see sheets starting at E-391P.

REQUEST FOR INFORMATION NOT ADDRESSED IN THIS CCO REMAIN IN FORCE					
0	12/18/12	Install Base CCTV System	RR JH	RG	150S1
MARK	DATE	DESCRIPTIONS	BY	CH'D	CCO#
REVISIONS					

CONTRACT CHANGE ORDER NO. 150 S1
SHEET 64 OF 86

DETAILS
(BASE CCTV SYSTEM)
CABLE BLOCK RISER DIAGRAM

E-391C

THIS PLAN IS ACCURATE FOR ELECTRICAL WORK ONLY.

CALCULATED/DESIGNED BY	JV	DATE 11/12	REVISED BY
CHECKED BY	JH/RG	11/12	DATE REVISED

DESIGN OVERSIGHT: BEHZAD GOLEMOHAMMADI

STATE OF CALIFORNIA - DEPARTMENT OF TRANSPORTATION

Caltrans

LAST REVISION 00-00-00 | DATE PLOTTED => 18-DEC-2012 | TIME PLOTTED => 17:26

RELATIVE BORDER SCALE IS IN MILLIMETERS 0 20 40 60 80

DGN FILE => 04-0120F1_0350S52.dgn
USERNAME => Llorico

CU 04251 | EA 0120F1

Dist	COUNTY	ROUTE	POST MILES TOTAL PROJECT	SHEET No.	TOTAL SHEETS
04	SF	80	13.2/13.9	350 S53	1204

11/26/12
REGISTERED ELECTRICAL ENGINEER

11-29-12
PLANS APPROVAL DATE

REGISTERED PROFESSIONAL ENGINEER BEN EDALATI No. 14761 Exp. 6/2013 ELECTRICAL STATE OF CALIFORNIA

THE STATE OF CALIFORNIA OR ITS OFFICERS OR AGENTS SHALL NOT BE RESPONSIBLE FOR THE ACCURACY OR COMPLETENESS OF ELECTRONIC COPIES OF THIS PLAN SHEET.

Caltrans now has a web site! To get to the web site, go to http://www.dot.ca.gov

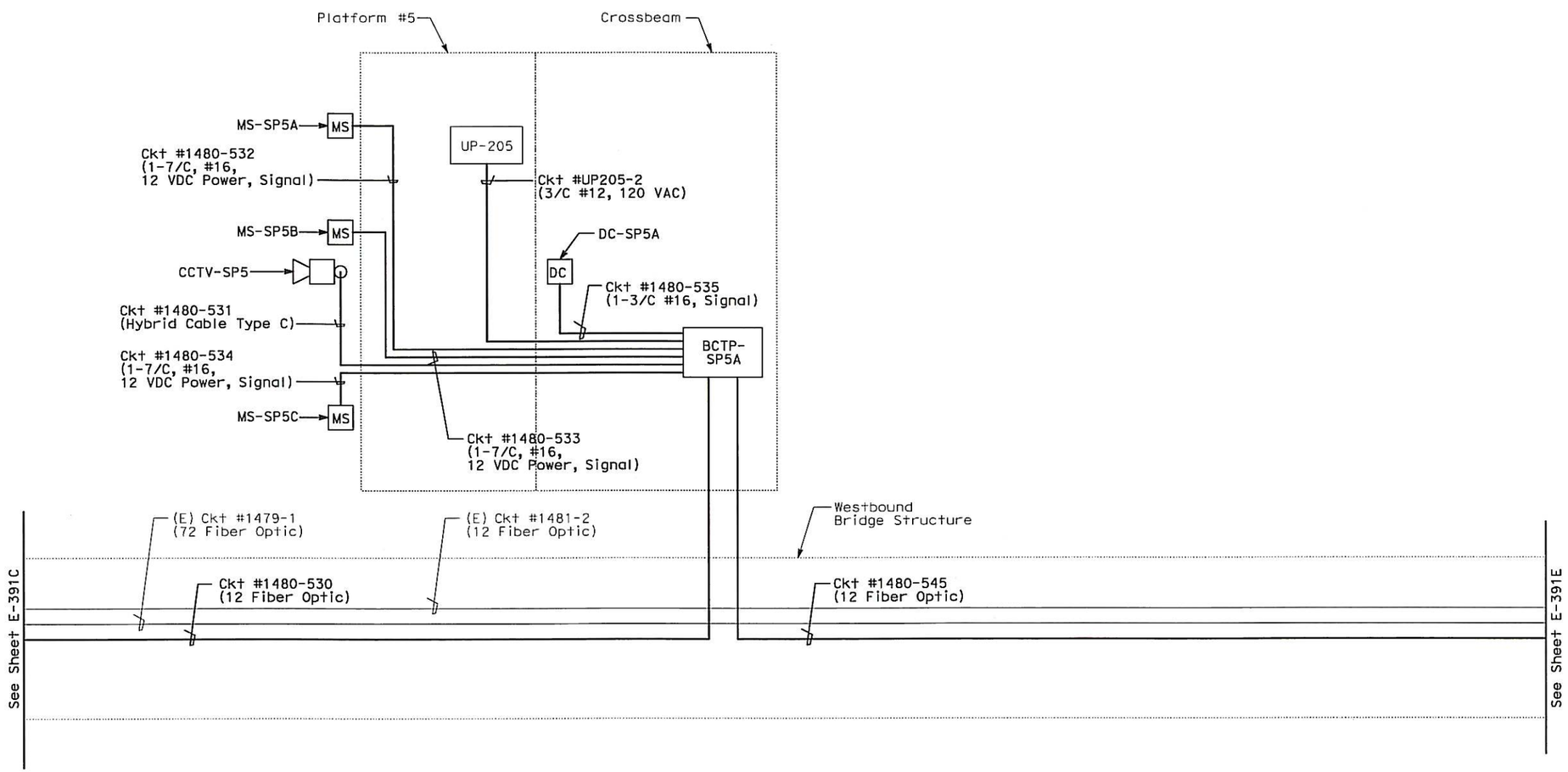

NOTES:

1. Reference:
   - For circuit and conduit/cable tray schedules, see sheets starting at E-400 series.
   - For Fiber Optic termination, see sheets starting at E-391P.

MARK	DATE	DESCRIPTIONS	BY	CH'D	CCO#
0	12/18/12	Install Base CCTV System	RR JH	RG	150S1

REQUEST FOR INFORMATION NOT ADDRESSED IN THIS CCO REMAIN IN FORCE

REVISIONS

CONTRACT CHANGE ORDER NO. 150S1
SHEET 65 OF 86

DETAILS
(BASE CCTV SYSTEM)
CABLE BLOCK RISER DIAGRAM

E-391D

THIS PLAN IS ACCURATE FOR ELECTRICAL WORK ONLY.

STATE OF CALIFORNIA - DEPARTMENT OF TRANSPORTATION
Caltrans

DESIGN OVERSIGHT
BEHZAD GOLEMOHAMMADI

CALCULATED/DESIGNED BY JV
CHECKED BY JH/RG
DATE 11/12
REVISED BY 11/12
DATE REVISED

LAST REVISION 00-00-00
DATE PLOTTED => 18-DEC-2012
TIME PLOTTED => 17:26

RELATIVE BORDER SCALE IS IN MILLIMETERS 0 20 40 60 80

DGN FILE => 04-0120f1_0350S53.dgn
USERNAME => Liorico

CU 04251

EA 0120F1

Dist	COUNTY	ROUTE	POST MILES TOTAL PROJECT	SHEET No.	TOTAL SHEETS
04	SF	80	13.2/13.9	350 S54	1204

11/26/12
REGISTERED ELECTRICAL ENGINEER

11-29-12
PLANS APPROVAL DATE

REGISTERED PROFESSIONAL ENGINEER BEN EDALATI No. 14761 Exp. 6/2013 ELECTRICAL STATE OF CALIFORNIA

THE STATE OF CALIFORNIA OR ITS OFFICERS OR AGENTS SHALL NOT BE RESPONSIBLE FOR THE ACCURACY OR COMPLETENESS OF ELECTRONIC COPIES OF THIS PLAN SHEET.

Caltrans now has a web site! To get to the web site, go to http://www.dot.ca.gov

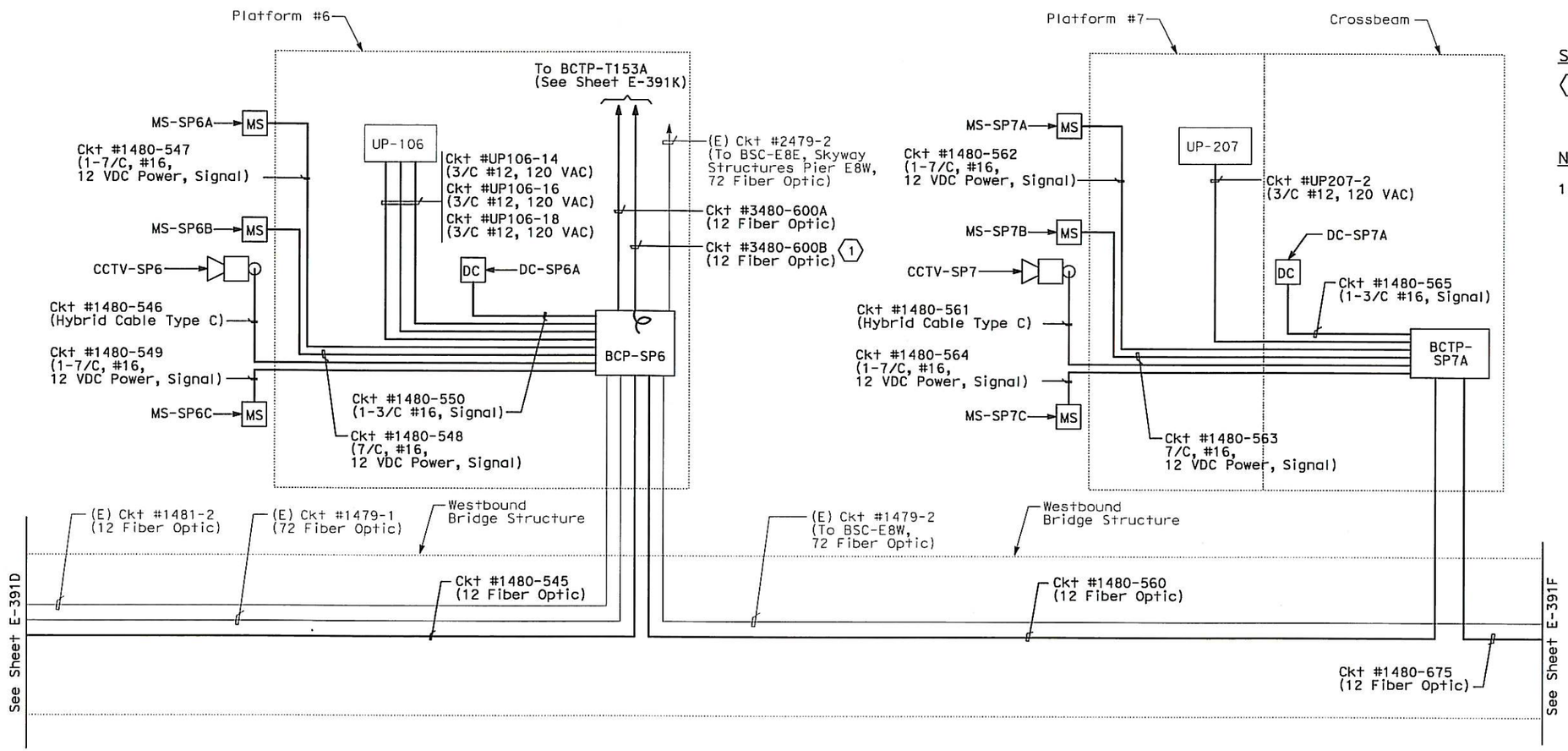

SHEET NOTES:

(1) Coil 5 m of fiber optic cable inside BCP-SP6.

NOTES:

1. Reference:
   - For circuit and conduit/cable tray schedules, see sheets starting at E-400 series.
   - For Fiber Optic termination, see sheets E-391R, E-391T and E-391U.

REQUEST FOR INFORMATION NOT ADDRESSED IN THIS CCO REMAIN IN FORCE					
0	12/18/12	Install Base CCTV System	RSB JH	RG	150S1
MARK	DATE	DESCRIPTIONS	BY	CH'D	CCO#
REVISIONS					

CONTRACT CHANGE ORDER NO. 150 S1
SHEET 66 OF 86

DETAILS
(BASE CCTV SYSTEM)
CABLE BLOCK RISER DIAGRAM

E-391E

THIS PLAN IS ACCURATE FOR ELECTRICAL WORK ONLY.

STATE OF CALIFORNIA - DEPARTMENT OF TRANSPORTATION
Caltrans
DESIGN OVERSIGHT
BEHZAD GOLEMOHAMMADI
CALCULATED/DESIGNED BY JV
CHECKED BY JH/RG
DATE 11/12 11/12
REVISED BY
DATE REVISED

LAST REVISION 00-00-00
DATE PLOTTED => 18-DEC-2012
TIME PLOTTED => 17:26

RELATIVE BORDER SCALE IS IN MILLIMETERS 0 20 40 60 80

DGN FILE => 04-0120f1_0350S54.dgn
USERNAME => Liorico

CU 04251

EA 0120F1

Dist	COUNTY	ROUTE	POST MILES TOTAL PROJECT	SHEET No.	TOTAL SHEETS
04	SF	80	13.2/13.9	350 S55	1204

11/26/12
REGISTERED ELECTRICAL ENGINEER

11-29-12
PLANS APPROVAL DATE

REGISTERED PROFESSIONAL ENGINEER BEN EDALATI No. 14761 Exp. 6/2013 ELECTRICAL STATE OF CALIFORNIA

THE STATE OF CALIFORNIA OR ITS OFFICERS OR AGENTS SHALL NOT BE RESPONSIBLE FOR THE ACCURACY OR COMPLETENESS OF ELECTRONIC COPIES OF THIS PLAN SHEET.

Caltrans now has a web site! To get to the web site, go to http://www.dot.ca.gov

Caltrans Metric

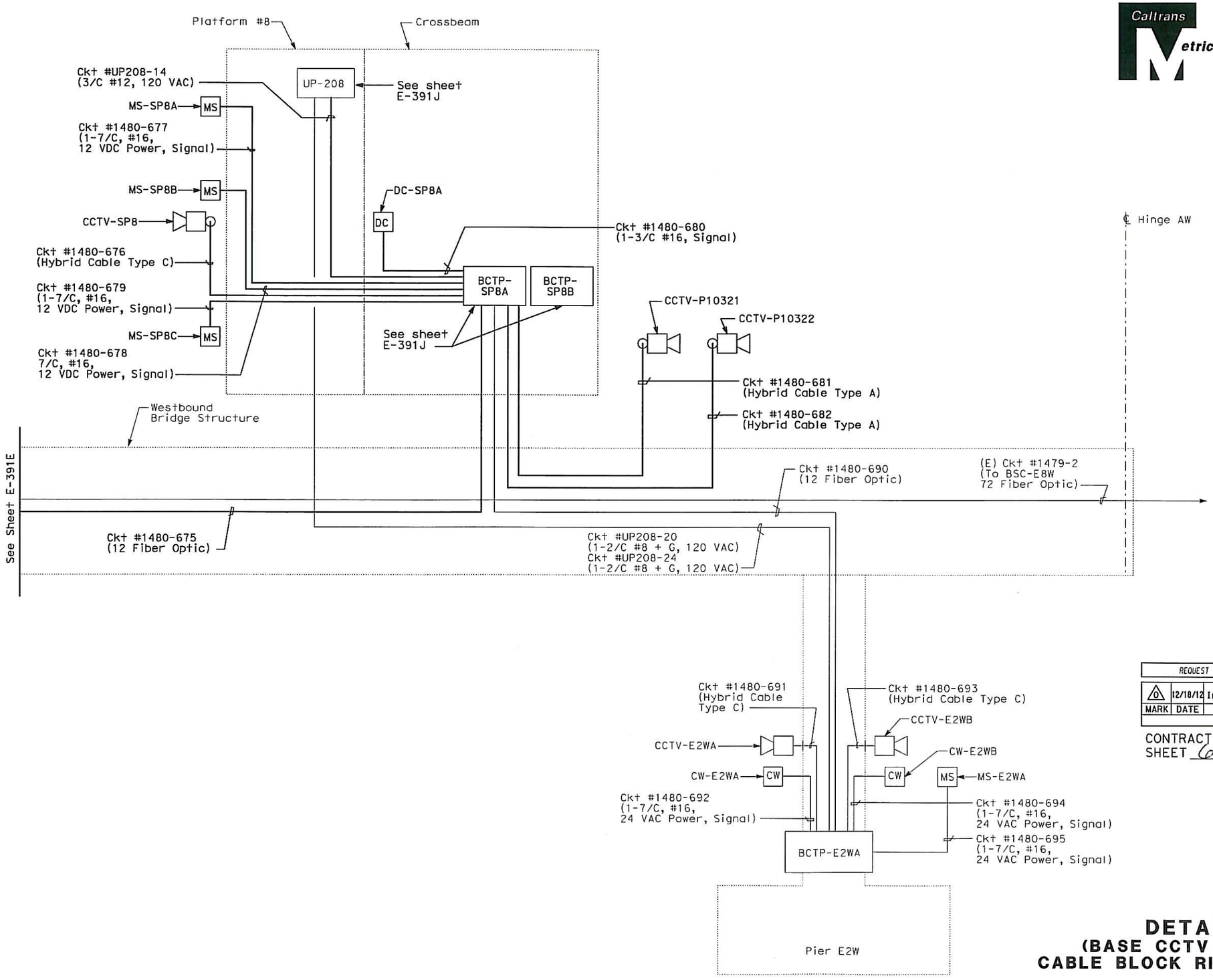

NOTES:

1. Reference:
   - For circuit and conduit/cable tray schedules, see sheets starting at E-400 series.
   - For Fiber Optic termination, see sheets starting at E-391P.

REQUEST FOR INFORMATION NOT ADDRESSED IN THIS CCO REMAIN IN FORCE

MARK	DATE	DESCRIPTIONS	BY	CH'D	CCO#
0	12/18/12	Install Base CCTV System	RSB JH	RG	150S1

REVISIONS

CONTRACT CHANGE ORDER NO. 150S1
SHEET 67 OF 86

DETAILS
(BASE CCTV SYSTEM)
CABLE BLOCK RISER DIAGRAM

E-391F

THIS PLAN IS ACCURATE FOR ELECTRICAL WORK ONLY.

STATE OF CALIFORNIA - DEPARTMENT OF TRANSPORTATION
Caltrans

DESIGN OVERSIGHT: BEHZAD GOLEMOHAMMADI

CALCULATED/DESIGNED BY: JV — DATE 11/12 — REVISED BY
CHECKED BY: JH/RG 11/12 — DATE REVISED

LAST REVISION 00-00-00 — DATE PLOTTED => 19-DEC-2012 — TIME PLOTTED => 17:26

RELATIVE BORDER SCALE IS IN MILLIMETERS 0 20 40 60 80

DGN FILE => 04-0120f1_0350S55.dgn
USERNAME => Llorico

CU 04251 | EA 0120F1

Dist	COUNTY	ROUTE	POST MILES TOTAL PROJECT	SHEET No.	TOTAL SHEETS
04	SF	80	13.2/13.9	350 S56	1204

REGISTERED ELECTRICAL ENGINEER 11/26/12

PLANS APPROVAL DATE 11-29-12

REGISTERED PROFESSIONAL ENGINEER BEN EDALATI No. 14761 Exp. 6/2013 ELECTRICAL STATE OF CALIFORNIA

THE STATE OF CALIFORNIA OR ITS OFFICERS OR AGENTS SHALL NOT BE RESPONSIBLE FOR THE ACCURACY OR COMPLETENESS OF ELECTRONIC COPIES OF THIS PLAN SHEET.

Caltrans now has a web site! To get to the web site, go to http://www.dot.ca.gov

Caltrans Metric

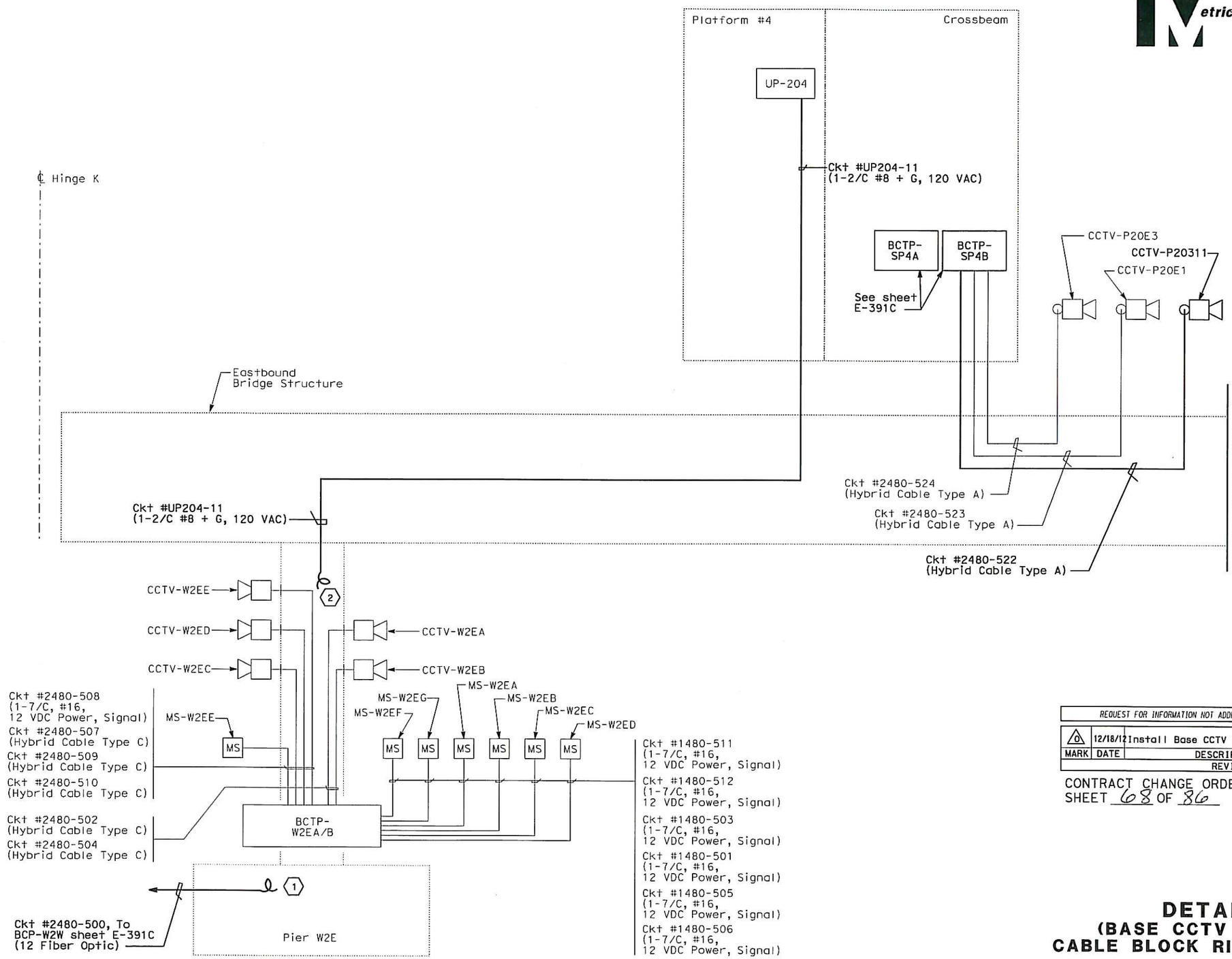

SHEET NOTES:

1. Coil 10 m inside TOS/COM Pull Box A4.
2. Coil 2 m inside 600 V Pull Box A23.

NOTES:

1. Reference:
   - For circuit and conduit/cable tray schedules, see sheets starting at E-400 series.
   - For Fiber Optic termination, see sheets starting at E-391P.

REQUEST FOR INFORMATION NOT ADDRESSED IN THIS CCO REMAIN IN FORCE					
0	12/18/12	Install Base CCTV System	RSB JH	RG	15051
MARK	DATE	DESCRIPTIONS	BY	CH'D	CCO#
REVISIONS					

CONTRACT CHANGE ORDER NO. 15051
SHEET 68 OF 86

DETAILS
(BASE CCTV SYSTEM)
CABLE BLOCK RISER DIAGRAM

E-391G

THIS PLAN IS ACCURATE FOR ELECTRICAL WORK ONLY.

STATE OF CALIFORNIA - DEPARTMENT OF TRANSPORTATION

Caltrans

DESIGN OVERSIGHT: BEHZAD GOLEMOHAMMADI

CALCULATED/DESIGNED BY: JV DATE 11/12 — REVISED BY
CHECKED BY: JH/RG 11/12 — DATE REVISED

LAST REVISION 00-00-00 — DATE PLOTTED => 18-DEC-2012 TIME PLOTTED => 17:26

RELATIVE BORDER SCALE IS IN MILLIMETERS 0 20 40 60 80

DGN FILE => 04-0120f1_0350S56.dgn
USERNAME => Llorico

CU 04251 | EA 0120F1

Dist	COUNTY	ROUTE	POST MILES TOTAL PROJECT	SHEET No.	TOTAL SHEETS
04	SF	80	13.2/13.9	350 S57	1204

11/26/12
REGISTERED ELECTRICAL ENGINEER

11-29-12
PLANS APPROVAL DATE

REGISTERED PROFESSIONAL ENGINEER BEN EDALATI No. 14761 Exp. 6/2013 ELECTRICAL STATE OF CALIFORNIA

THE STATE OF CALIFORNIA OR ITS OFFICERS OR AGENTS SHALL NOT BE RESPONSIBLE FOR THE ACCURACY OR COMPLETENESS OF ELECTRONIC COPIES OF THIS PLAN SHEET.

Caltrans now has a web site! To get to the web site, go to http://www.dot.ca.gov

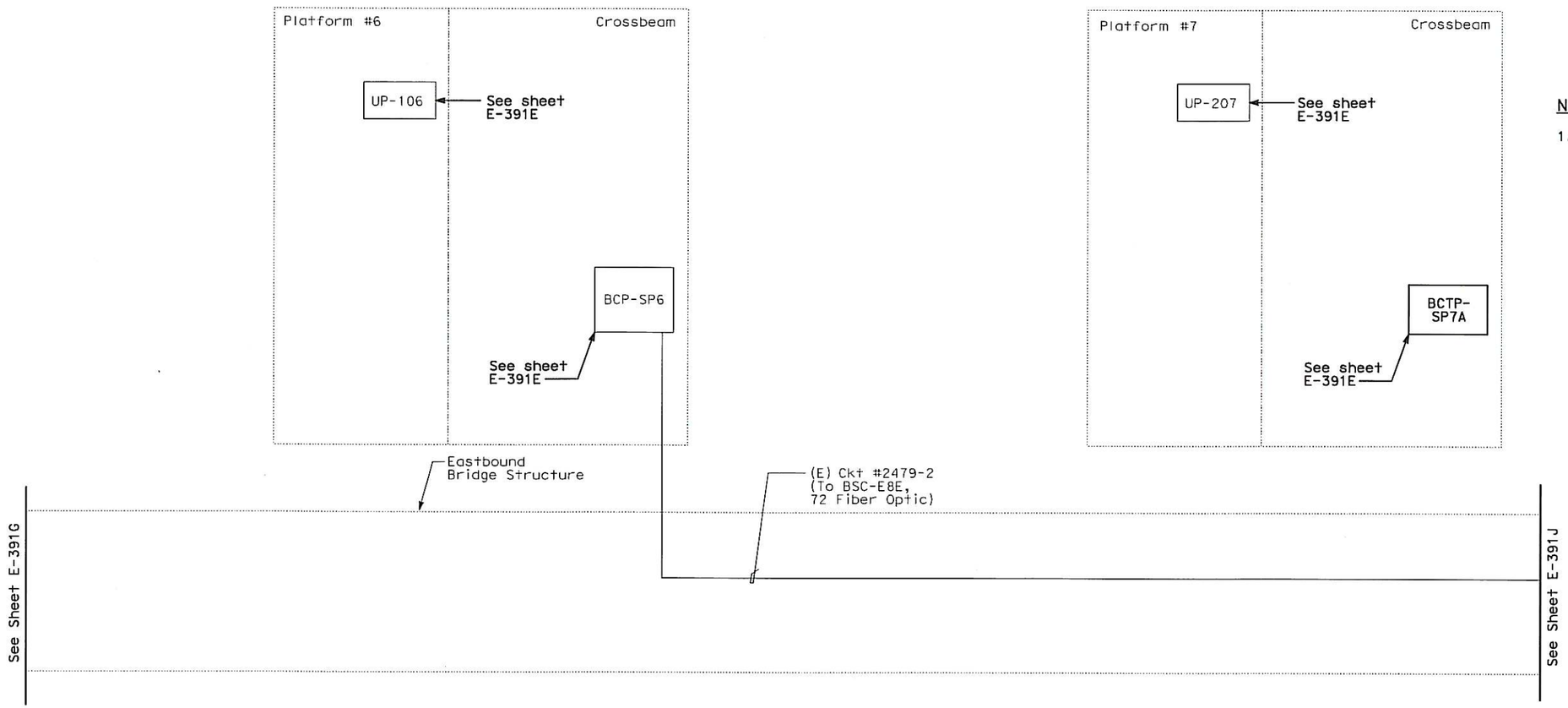

NOTES:

1. Reference:
   - For circuit and conduit/cable tray schedules, see sheets starting at E-400 series.
   - For Fiber Optic termination, see sheets starting at E-391P.

REQUEST FOR INFORMATION NOT ADDRESSED IN THIS CCO REMAIN IN FORCE

MARK	DATE	DESCRIPTIONS	BY	CH'D	CCO#
0	12/18/12	Install Base CCTV System	RR JH	RG	15051

REVISIONS

CONTRACT CHANGE ORDER NO. 15051
SHEET 69 OF 86

DETAILS
(BASE CCTV SYSTEM)
CABLE BLOCK RISER DIAGRAM

E-391H

THIS PLAN IS ACCURATE FOR ELECTRICAL WORK ONLY.

STATE OF CALIFORNIA - DEPARTMENT OF TRANSPORTATION
Caltrans

DESIGN OVERSIGHT: BEHZAD GOLEMOHAMMADI

CALCULATED/DESIGNED BY: JV — DATE 11/12
CHECKED BY: JH/RG — 11/12

REVISED BY — DATE REVISED

LAST REVISION 00-00-00 — DATE PLOTTED => 19-DEC-2012 — TIME PLOTTED => 17:26

RELATIVE BORDER SCALE IS IN MILLIMETERS 0 20 40 60 80

DGN FILE => 04-0120F1_0350S57.dgn
USERNAME => Llorico

CU 04251 | EA 0120F1

Dist	COUNTY	ROUTE	POST MILES TOTAL PROJECT	SHEET No.	TOTAL SHEETS
04	SF	80	13.2/13.9	350 S58	1204

11/26/12
REGISTERED ELECTRICAL ENGINEER

11-29-12
PLANS APPROVAL DATE

REGISTERED PROFESSIONAL ENGINEER BEN EDALATI No. 14761 Exp. 6/2013 ELECTRICAL STATE OF CALIFORNIA

THE STATE OF CALIFORNIA OR ITS OFFICERS OR AGENTS SHALL NOT BE RESPONSIBLE FOR THE ACCURACY OR COMPLETENESS OF ELECTRONIC COPIES OF THIS PLAN SHEET.

Caltrans now has a web site! To get to the web site, go to http://www.dot.ca.gov

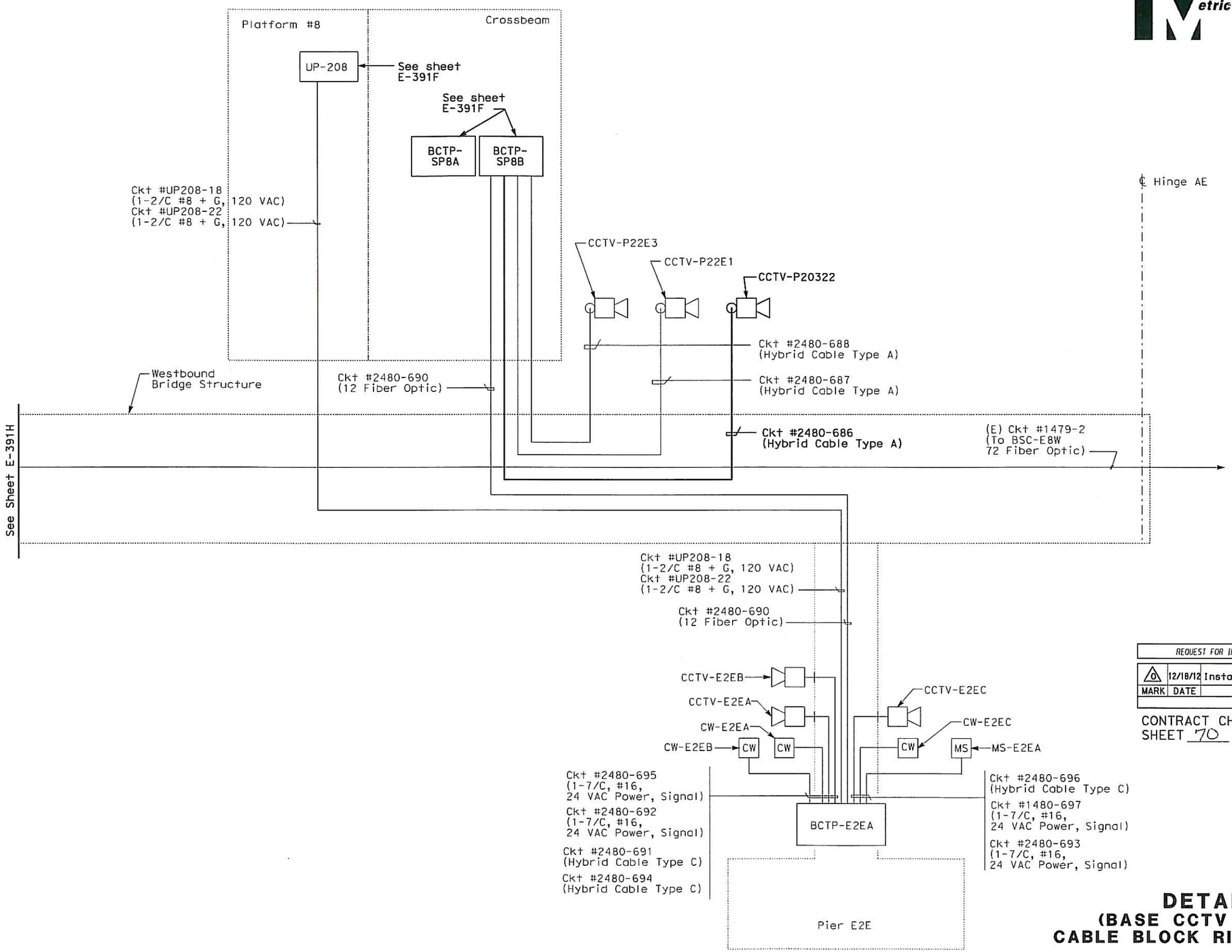

NOTES:

1. Reference:
   - For circuit and conduit/cable tray schedules, see sheets starting at E-400 series.
   - For Fiber Optic termination, see sheets starting at E-391P.

REQUEST FOR INFORMATION NOT ADDRESSED IN THIS CCO REMAIN IN FORCE

MARK	DATE	DESCRIPTIONS	BY	CH'D	CCO#
0	12/18/12	Install Base CCTV System	RSB JH	RG	15051

REVISIONS

CONTRACT CHANGE ORDER NO. 15051
SHEET 70 OF 86

DETAILS
(BASE CCTV SYSTEM)
CABLE BLOCK RISER DIAGRAM

E-391J

THIS PLAN IS ACCURATE FOR ELECTRICAL WORK ONLY.

STATE OF CALIFORNIA - DEPARTMENT OF TRANSPORTATION
Caltrans

DESIGN OVERSIGHT: BEHZAD GOLEMOHAMMADI
CALCULATED/DESIGNED BY: JV
CHECKED BY: JH/RG
DATE: 11/12
REVISED BY: 11/12
DATE REVISED:

LAST REVISION 00-00-00
DATE PLOTTED => 18-DEC-2012
TIME PLOTTED => 17:26

RELATIVE BORDER SCALE IS IN MILLIMETERS: 0 20 40 60 80

DGN FILE => 04-0120f1_0350S58.dgn
USERNAME => Llorico

CU 04251

EA 0120F1

Dist	COUNTY	ROUTE	POST MILES TOTAL PROJECT	SHEET No.	TOTAL SHEETS
04	SF	80	13.2/13.9	350 S59	1204

REGISTERED ELECTRICAL ENGINEER 11/26/12

11-29-12
PLANS APPROVAL DATE

REGISTERED PROFESSIONAL ENGINEER BEN EDALATI No. 14761 Exp. 6/2013 ELECTRICAL STATE OF CALIFORNIA

THE STATE OF CALIFORNIA OR ITS OFFICERS OR AGENTS SHALL NOT BE RESPONSIBLE FOR THE ACCURACY OR COMPLETENESS OF ELECTRONIC COPIES OF THIS PLAN SHEET.

Caltrans now has a web site! To get to the web site, go to http://www.dot.ca.gov

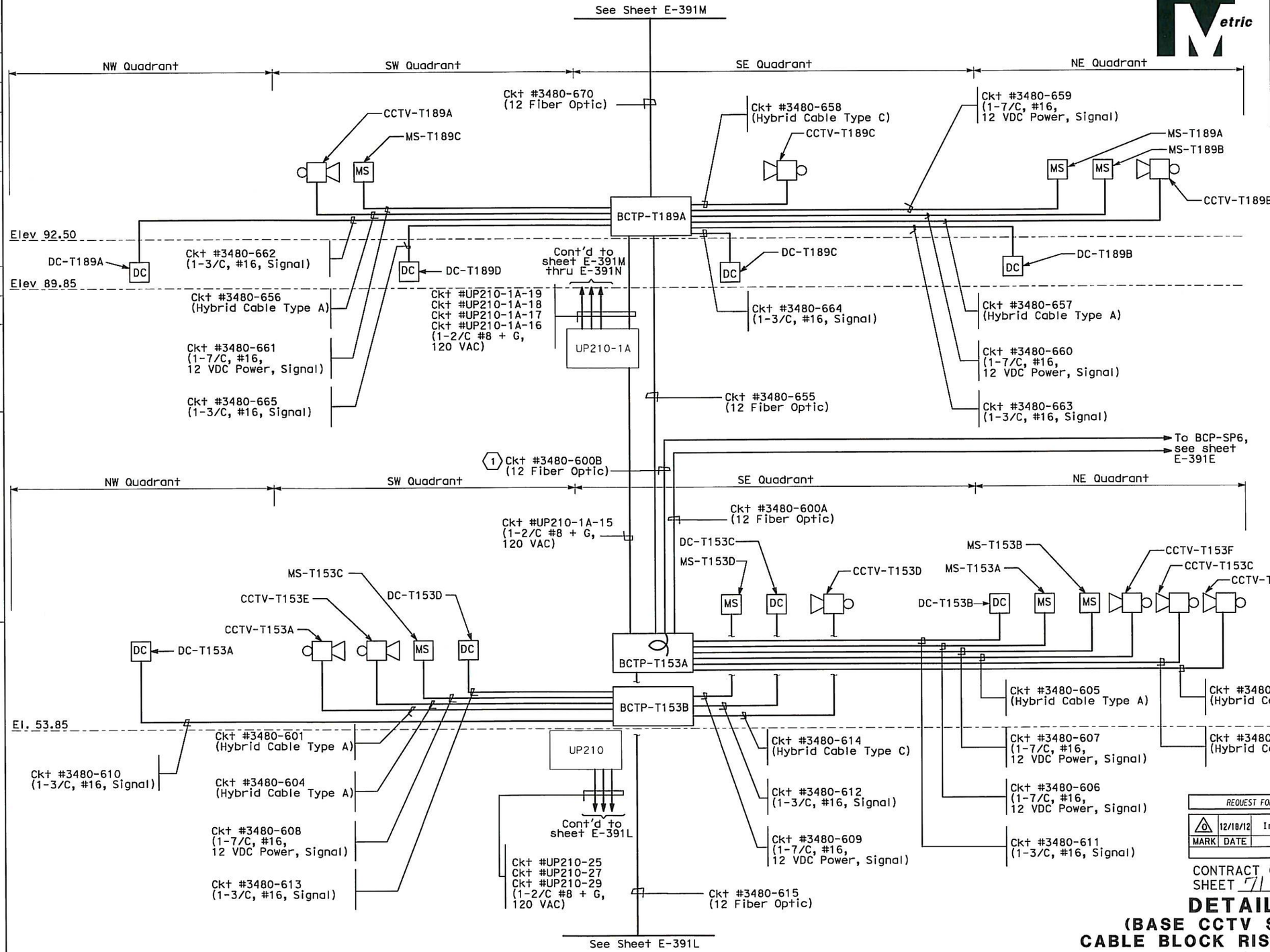

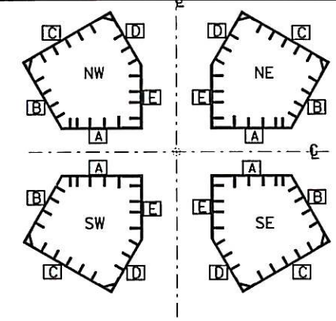

KEY PLAN

SHEET NOTES:

(1) Coil 5 m of fiber optic cable inside pull box.

NOTES:

1. Reference:
   - For circuit and conduit/cable tray schedules, see sheets starting at E-400 series.
   - For Fiber Optic termination, see sheets starting at E-391P.

REQUEST FOR INFORMATION NOT ADDRESSED IN THIS CCO REMAIN IN FORCE					
0	12/18/12	Install Base CCTV System	RR JH	RG	150S1
MARK	DATE	DESCRIPTIONS	BY	CH'D	CCO#
		REVISIONS			

CONTRACT CHANGE ORDER NO. 150S1
SHEET 71 OF 86

DETAILS
(BASE CCTV SYSTEM)
CABLE BLOCK RISER DIAGRAM

E-391K

THIS PLAN ACCURATE FOR ELECTRICAL WORK ONLY.

STATE OF CALIFORNIA - DEPARTMENT OF TRANSPORTATION
Caltrans

DESIGN OVERSIGHT: BEHZAD GOLEMOHAMMADI

CALCULATED/ DESIGNED BY	JV	DATE 11/12	REVISED BY	DATE REVISED
CHECKED BY	JH/RG	11/12		

LAST REVISION 00-00-00
DATE PLOTTED => 18-DEC-2012
TIME PLOTTED => 17:26

FOR REDUCED PLANS ORIGINAL SCALE IS IN MILLIMETERS 0 20 40 60 80

DGN FILE =>04-0120f1_0350S59.dgn
USERNAME =>Llorico

CU 04251 | EA 0120F1

REQUEST FOR INFORMATION NOT ADDRESSED IN THIS CCO REMAIN IN FORCE

MARK	DATE	DESCRIPTIONS	BY	CH'D	CCO#
0	12/18/12	Install Base CCTV System	RR JH	RG	150S1

REVISIONS

CONTRACT CHANGE ORDER NO. 150 S1
SHEET 72 OF 86

Dist	COUNTY	ROUTE	POST MILES TOTAL PROJECT	SHEET No.	TOTAL SHEETS
04	SF	80	13.2/13.9	350 S60	1204

REGISTERED ELECTRICAL ENGINEER 11/26/12

PLANS APPROVAL DATE 11-29-12

REGISTERED PROFESSIONAL ENGINEER BEN EDALATI No. 14761 Exp. 6/2013 ELECTRICAL STATE OF CALIFORNIA

THE STATE OF CALIFORNIA OR ITS OFFICERS OR AGENTS SHALL NOT BE RESPONSIBLE FOR THE ACCURACY OR COMPLETENESS OF ELECTRONIC COPIES OF THIS PLAN SHEET.

Caltrans now has a web site! To get to the web site, go to http://www.dot.ca.gov

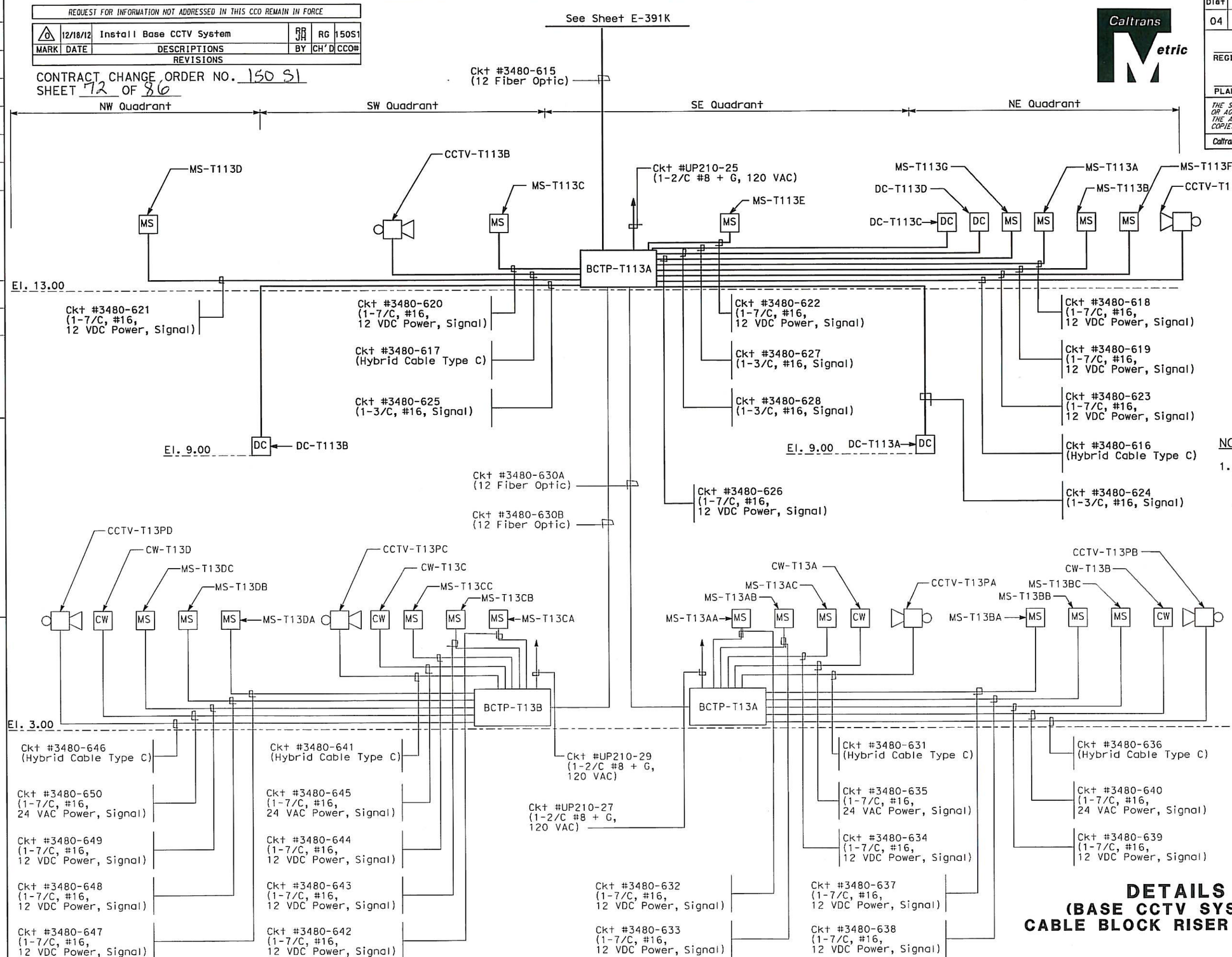

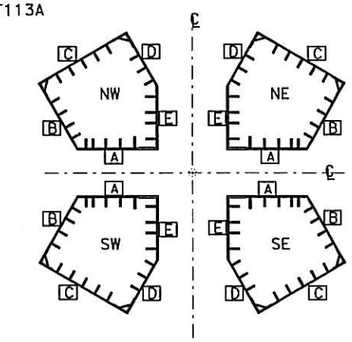

KEY PLAN

NOTES:

1. Reference:
   - For circuit and conduit/cable tray schedules, see sheets starting at E-400 series.
   - For Fiber Optic termination, see sheets starting at E-391P.

THIS PLAN ACCURATE FOR ELECTRICAL WORK ONLY.

DETAILS
(BASE CCTV SYSTEM)
CABLE BLOCK RISER DIAGRAM

E-391L

REVISED BY	DATE REVISED

CALCULATED/DESIGNED BY	DATE 11/12
JV	

CHECKED BY	11/12
JH/RG	

DESIGN OVERSIGHT: BEHZAD GOLEMOHAMMADI

STATE OF CALIFORNIA - DEPARTMENT OF TRANSPORTATION

Caltrans

FOR REDUCED PLANS ORIGINAL SCALE IS IN MILLIMETERS 0 20 40 60 80

DGN FILE =>04-0120f1_0350S60.dgn
USERNAME =>Llorico

CU 04251

EA 0120F1

LAST REVISION 00-00-00

DATE PLOTTED => 18-DEC-2012
TIME PLOTTED => 17:26

Dist	COUNTY	ROUTE	POST MILES TOTAL PROJECT	SHEET No.	TOTAL SHEETS
04	SF	80	13.2/13.9	350 S61	1204

REGISTERED ELECTRICAL ENGINEER 11/26/12

PLANS APPROVAL DATE 11-29-12

REGISTERED PROFESSIONAL ENGINEER BEN EDALATI No. 14761 Exp. 6/2013 ELECTRICAL STATE OF CALIFORNIA

THE STATE OF CALIFORNIA OR ITS OFFICERS OR AGENTS SHALL NOT BE RESPONSIBLE FOR THE ACCURACY OR COMPLETENESS OF ELECTRONIC COPIES OF THIS PLAN SHEET.

Caltrans now has a web site! To get to the web site, go to http://www.dot.ca.gov

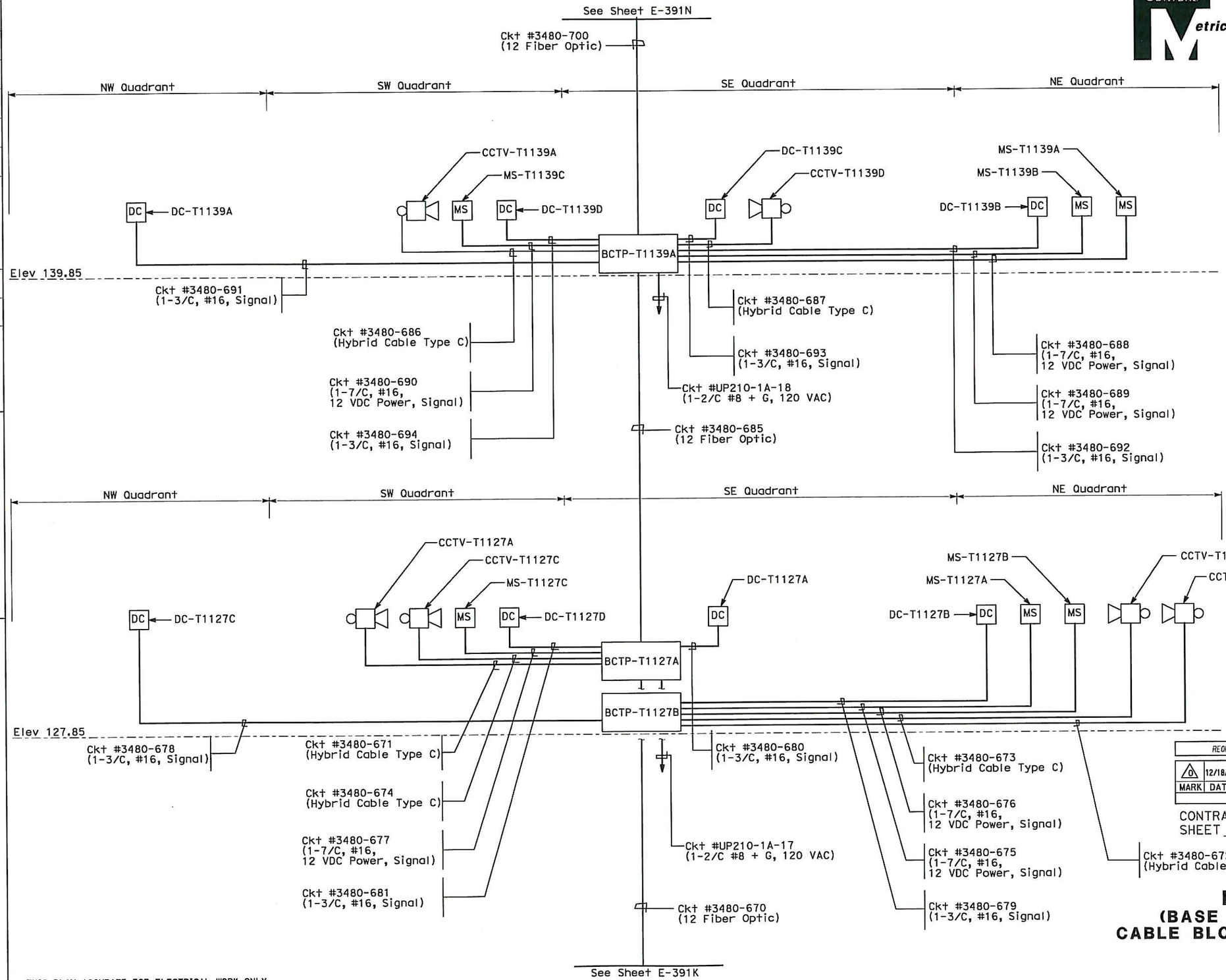

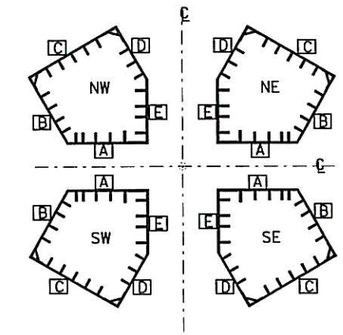

KEY PLAN

NOTES:

1. Reference:
   - For circuit and conduit/cable tray schedules, see sheets starting at E-400 series.
   - For Fiber Optic termination, see sheets starting at E-391P.

REQUEST FOR INFORMATION NOT ADDRESSED IN THIS CCO REMAIN IN FORCE					
0	12/18/12	Install Base CCTV System	JH	EJL	150S1
MARK	DATE	DESCRIPTIONS	BY	CH'D	CCO#
		REVISIONS			

CONTRACT CHANGE ORDER NO. 150 S1
SHEET 73 OF 86

DETAILS
(BASE CCTV SYSTEM)
CABLE BLOCK RISER DIAGRAM

E-391M

THIS PLAN ACCURATE FOR ELECTRICAL WORK ONLY.

STATE OF CALIFORNIA - DEPARTMENT OF TRANSPORTATION

DESIGN OVERSIGHT: BEHZAD GOLEMOHAMMADI

CALCULATED/DESIGNED BY: JV — CHECKED BY: JH/RG — DATE 11/12 — REVISED BY — DATE REVISED

LAST REVISION 00-00-00 — DATE PLOTTED => 18-DEC-2012 — TIME PLOTTED => 17:26

FOR REDUCED PLANS ORIGINAL SCALE IS IN MILLIMETERS 0 20 40 60 80

DGN FILE =>04-0120f1_0350S61.dgn
USERNAME =>Liorico

CU 04251 — EA 0120F1

Dist	COUNTY	ROUTE	POST MILES TOTAL PROJECT	SHEET No.	TOTAL SHEETS
04	SF	80	13.2/13.9	350 S62	1204

REGISTERED ELECTRICAL ENGINEER 11/26/12

11-29-12
PLANS APPROVAL DATE

REGISTERED PROFESSIONAL ENGINEER BEN EDALATI No. 14761 Exp. 6/2013 ELECTRICAL STATE OF CALIFORNIA

THE STATE OF CALIFORNIA OR ITS OFFICERS OR AGENTS SHALL NOT BE RESPONSIBLE FOR THE ACCURACY OR COMPLETENESS OF ELECTRONIC COPIES OF THIS PLAN SHEET.

Caltrans now has a web site! To get to the web site, go to http://www.dot.ca.gov

Caltrans Metric

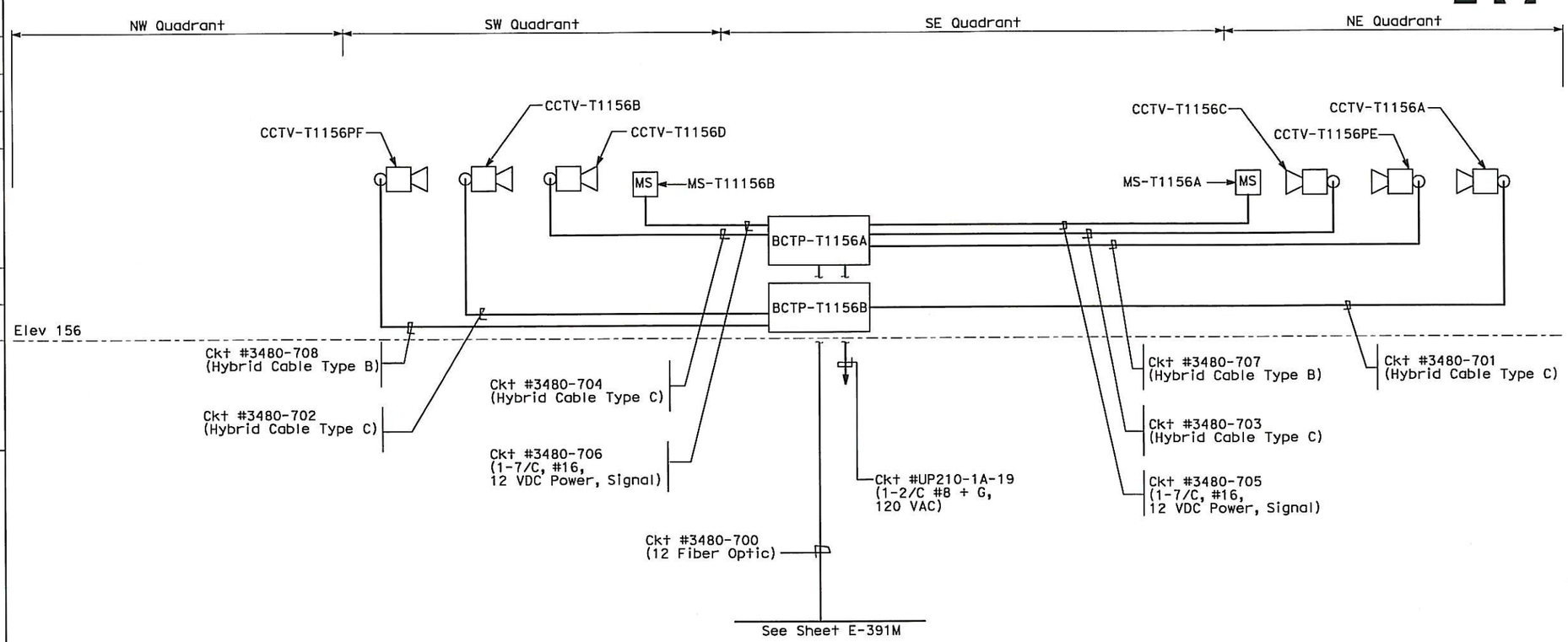

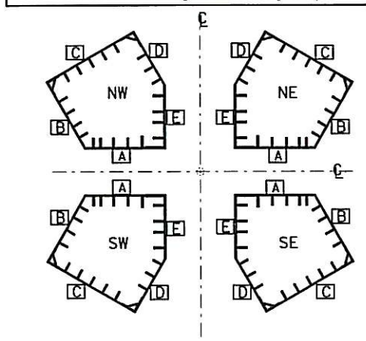

KEY PLAN

NOTES:

1. Reference:
   - For circuit and conduit/cable tray schedules, see sheets starting at E-400 series.
   - For Fiber Optic termination, see sheets starting at E-391P.

MARK	DATE	DESCRIPTIONS	BY	CH'D	CCO#
0	12/18/12	Install Base CCTV System	RR JH	RG	150S1

REVISIONS

REQUEST FOR INFORMATION NOT ADDRESSED IN THIS CCO REMAIN IN FORCE

CONTRACT CHANGE ORDER NO. 150 S1
SHEET 74 OF 86

DETAILS
(BASE CCTV SYSTEM)
CABLE BLOCK RISER DIAGRAM

E-391N

THIS PLAN ACCURATE FOR ELECTRICAL WORK ONLY.

STATE OF CALIFORNIA - DEPARTMENT OF TRANSPORTATION
Caltrans

DESIGN OVERSIGHT: BEHZAD GOLEMOHAMMADI

CALCULATED/DESIGNED BY: JV | DATE 11/12
CHECKED BY: JH/RG | DATE 11/12
REVISED BY | DATE REVISED

LAST REVISION 00-00-00
DATE PLOTTED => 18-DEC-2012
TIME PLOTTED => 17:26

FOR REDUCED PLANS ORIGINAL SCALE IS IN MILLIMETERS 0 20 40 60 80

DGN FILE =>04-0120f1_0350S62.dgn
USERNAME =>Llorico

CU 04251 | EA 0120F1

Dist	COUNTY	ROUTE	POST MILES TOTAL PROJECT	SHEET No.	TOTAL SHEETS
04	SF	80	13.2/13.9	350 S63	1204

REGISTERED ELECTRICAL ENGINEER 11/26/12

PLANS APPROVAL DATE 11-29-12

REGISTERED PROFESSIONAL ENGINEER BEN EDALATI No. 14761 Exp. 6/2013 ELECTRICAL STATE OF CALIFORNIA

THE STATE OF CALIFORNIA OR ITS OFFICERS OR AGENTS SHALL NOT BE RESPONSIBLE FOR THE ACCURACY OR COMPLETENESS OF ELECTRONIC COPIES OF THIS PLAN SHEET.

Caltrans now has a web site! To get to the web site, go to http://www.dot.ca.gov

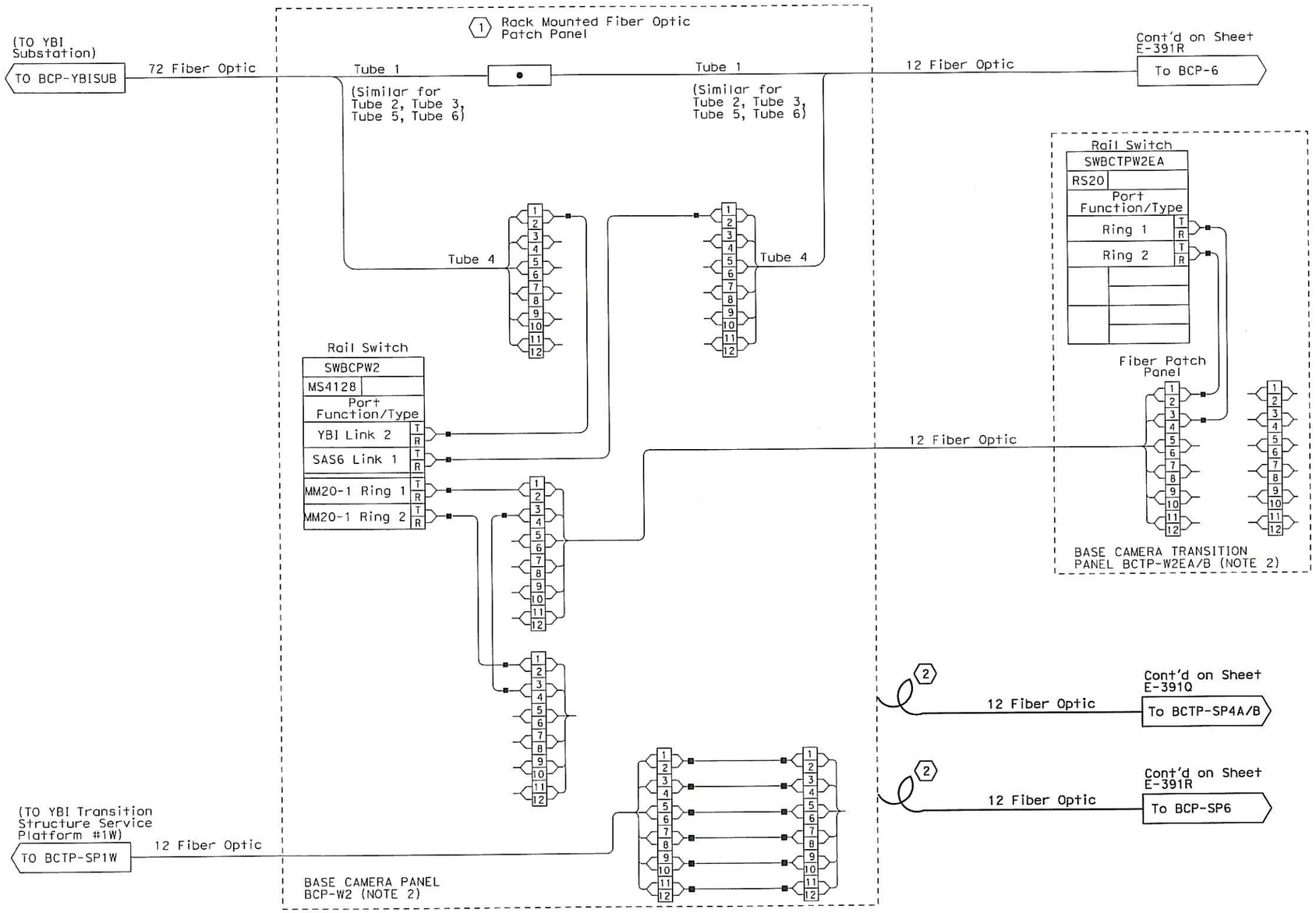

SHEET NOTES:

1. Fiber optic tubes and fiber optic cable shall be terminated to six pack panels providing six duplex SC UPC connections.
2. Coil 10 m of fiber optic cable inside TOS/COM Pull Box A4.

NOTES:

1. References:
   - For cable block riser diagram, see sheets E-391C thru E-391N.
2. The BCP-W2 and BCTP-W2EA/B cabinets shown including associated fiber connections are for reference only.

REQUEST FOR INFORMATION NOT ADDRESSED IN THIS CCO REMAIN IN FORCE

MARK	DATE	DESCRIPTIONS	BY	CH'D	CCO#
0	12/18/12	Install Base CCTV System	JH	RG	150S1

REVISIONS

CONTRACT CHANGE ORDER NO. 150 S1
SHEET 75 OF 86

DETAILS
(BASE CCTV SYSTEM)
FIBER OPTIC CAMERA NETWORK
NO SCALE

E-391P

THIS PLAN ACCURATE FOR ELECTRICAL WORK ONLY.

STATE OF CALIFORNIA - DEPARTMENT OF TRANSPORTATION

DESIGN OVERSIGHT: BEHZAD GOLEMOHAMMADI

CALCULATED/DESIGNED BY: JV DATE 11/12 REVISED BY
CHECKED BY: JH/RG 11/12 DATE REVISED

LAST REVISION 00-00-00 DATE PLOTTED => 18-DEC-2012 TIME PLOTTED => 17:26

FOR REDUCED PLANS ORIGINAL SCALE IS IN MILLIMETERS 0 20 40 60 80

DGN FILE =>04-0120f1_0350S63.dgn
USERNAME =>Liorico

CU 04251 EA 0120F1

Dist	COUNTY	ROUTE	POST MILES TOTAL PROJECT	SHEET No.	TOTAL SHEETS
04	SF	80	13.2/13.9	350 S64	1204

11/26/12
REGISTERED ELECTRICAL ENGINEER

11-29-12
PLANS APPROVAL DATE

REGISTERED PROFESSIONAL ENGINEER BEN EDALATI No. 14761 Exp. 6/2013 ELECTRICAL STATE OF CALIFORNIA

THE STATE OF CALIFORNIA OR ITS OFFICERS OR AGENTS SHALL NOT BE RESPONSIBLE FOR THE ACCURACY OR COMPLETENESS OF ELECTRONIC COPIES OF THIS PLAN SHEET.

Caltrans now has a web site! To get to the web site, go to http://www.dot.ca.gov

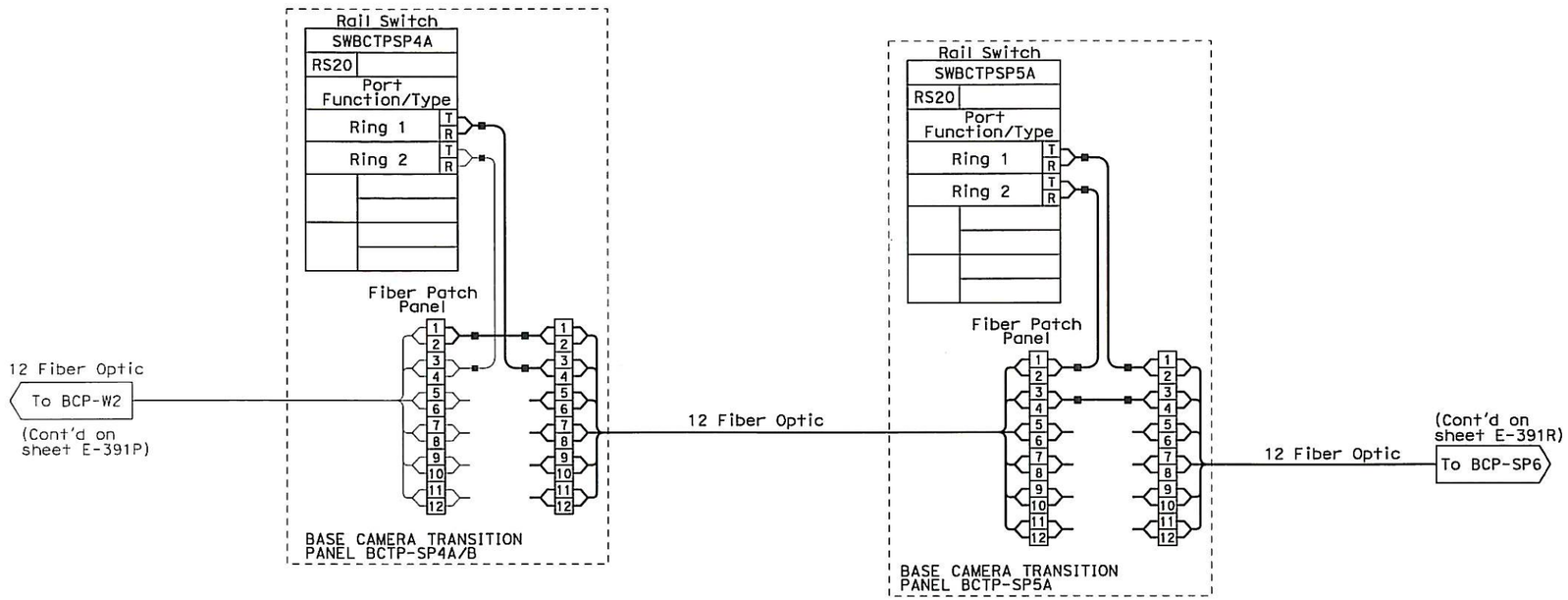

NOTES:

1. References:
   - For cable block riser diagram, see sheets E-391C thru E-391N.

REQUEST FOR INFORMATION NOT ADDRESSED IN THIS CCO REMAIN IN FORCE

MARK	DATE	DESCRIPTIONS	BY	CH'D	CCO#
0	12/18/12	Install Base CCTV System	RR JH	RG	150S1

REVISIONS

CONTRACT CHANGE ORDER NO. 150 S1
SHEET 76 OF 86

DETAILS
(BASE CCTV SYSTEM)
FIBER OPTIC CAMERA NETWORK
NO SCALE

E-391Q

THIS PLAN ACCURATE FOR ELECTRICAL WORK ONLY.

STATE OF CALIFORNIA - DEPARTMENT OF TRANSPORTATION
Caltrans

DESIGN OVERSIGHT: BEHZAD GOLEMOHAMMADI

CALCULATED/DESIGNED BY: JV | DATE 11/12 | REVISED BY
CHECKED BY: JH/RG | 11/12 | DATE REVISED

LAST REVISION 00-00-00 | DATE PLOTTED => 18-DEC-2012 | TIME PLOTTED => 17:26

FOR REDUCED PLANS ORIGINAL SCALE IS IN MILLIMETERS 0 20 40 60 80

DGN FILE =>04-0120f1_0350S64.dgn
USERNAME =>Liorico

CU 04251 | EA 0120F1

Dist	COUNTY	ROUTE	POST MILES TOTAL PROJECT	SHEET No.	TOTAL SHEETS
04	SF	80	13.2/13.9	350 S65	1204

REGISTERED ELECTRICAL ENGINEER 11/26/12

PLANS APPROVAL DATE 11-29-12

REGISTERED PROFESSIONAL ENGINEER BEN EDALATI No. 14761 Exp. 6/2013 ELECTRICAL STATE OF CALIFORNIA

THE STATE OF CALIFORNIA OR ITS OFFICERS OR AGENTS SHALL NOT BE RESPONSIBLE FOR THE ACCURACY OR COMPLETENESS OF ELECTRONIC COPIES OF THIS PLAN SHEET.

Caltrans now has a web site! To get to the web site, go to http://www.dot.ca.gov

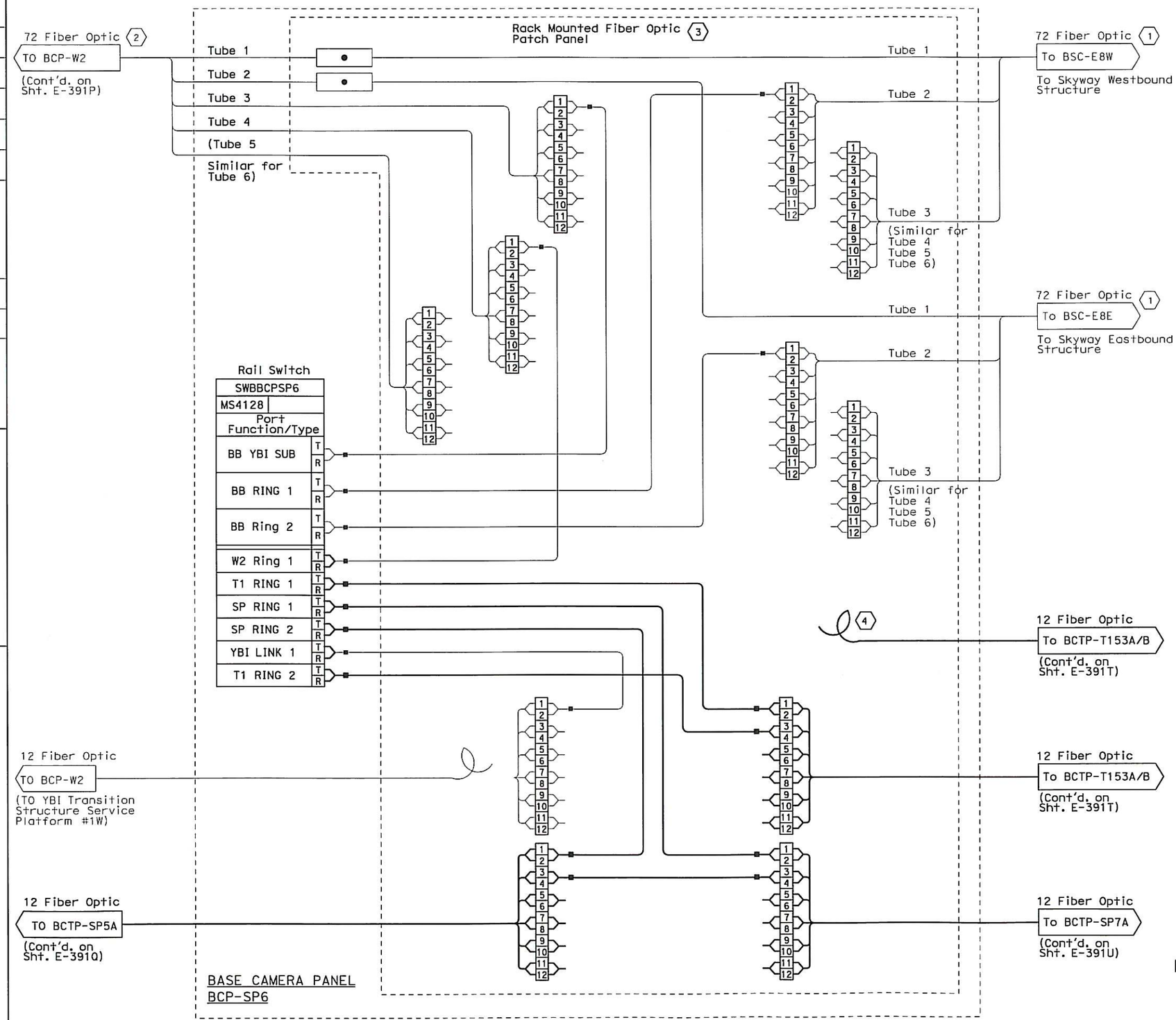

SHEET NOTES:

(1) The 72 fiber cable is coiled inside the (E) Base Camera Panel, installed by others. The Contractor shall terminate the 72 fiber.

(2) Fiber optic connections. For reference only.

(3) Fiber optic tubes and fiber optic cable shall be terminated to six pack panels providing six duplex SC UPC connections.

(4) Coil 5 m of fiber optic cable inside BCP-SP6.

NOTES:

1. References:
   - For cable block riser diagram, see sheets E-391K thru E-391N.

REQUEST FOR INFORMATION NOT ADDRESSED IN THIS CCO REMAIN IN FORCE

MARK	DATE	DESCRIPTIONS	BY	CH'D	CCO#
0	12/18/12	Install Base CCTV System	RR JH	RG	150S1

REVISIONS

CONTRACT CHANGE ORDER NO. 150 S1
SHEET 77 OF 86

DETAILS
(BASE CCTV SYSTEM)
FIBER OPTIC CAMERA NETWORK
NO SCALE

E-391R

THIS PLAN ACCURATE FOR ELECTRICAL WORK ONLY.

STATE OF CALIFORNIA - DEPARTMENT OF TRANSPORTATION

DESIGN OVERSIGHT: BEHZAD GOLEMOHAMMADI

CALCULATED/DESIGNED BY: JV — CHECKED BY: JH/RG — DATE 11/12 — REVISED BY — DATE REVISED

LAST REVISION 00-00-00 — DATE PLOTTED => 18-DEC-2012 — TIME PLOTTED => 17:26

FOR REDUCED PLANS ORIGINAL SCALE IS IN MILLIMETERS 0 20 40 60 80

DGN FILE =>04-0120f1_0350S65.dgn
USERNAME =>Llorico

CU 04251 — EA 0120F1

Dist	COUNTY	ROUTE	POST MILES TOTAL PROJECT	SHEET No.	TOTAL SHEETS
04	SF	80	13.2/13.9	350 S66	1204

11/26/12
REGISTERED ELECTRICAL ENGINEER

11-29-12
PLANS APPROVAL DATE

REGISTERED PROFESSIONAL ENGINEER BEN EDALATI No. 14761 Exp. 6/2013 ELECTRICAL STATE OF CALIFORNIA

THE STATE OF CALIFORNIA OR ITS OFFICERS OR AGENTS SHALL NOT BE RESPONSIBLE FOR THE ACCURACY OR COMPLETENESS OF ELECTRONIC COPIES OF THIS PLAN SHEET.

Caltrans now has a web site! To get to the web site, go to http://www.dot.ca.gov

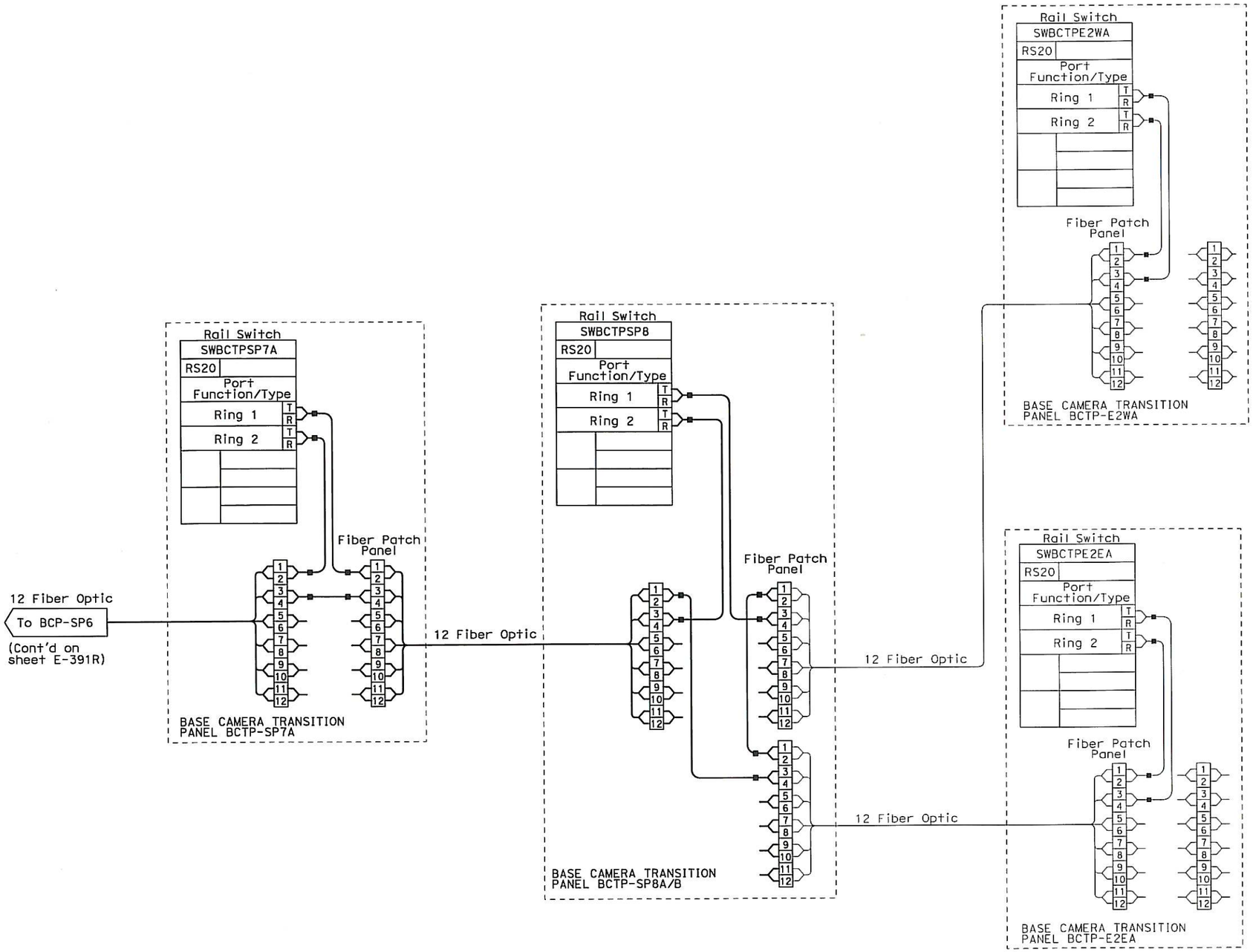

NOTES:

1. References:
   - For cable block riser diagram, see sheets E-391C thru E-391N.

REQUEST FOR INFORMATION NOT ADDRESSED IN THIS CCO REMAIN IN FORCE

MARK	DATE	DESCRIPTIONS	BY	CH'D	CCO#
0	12/18/12	Install Base CCTV System	RR JH	RG	150S1

REVISIONS

CONTRACT CHANGE ORDER NO. 150 S1
SHEET 78 OF 86

DETAILS
(BASE CCTV SYSTEM)
FIBER OPTIC CAMERA NETWORK
NO SCALE

E-391S

THIS PLAN IS ACCURATE FOR ELECTRICAL WORK ONLY.

CALCULATED/ DESIGNED BY	JV	DATE 11/12	REVISED BY
CHECKED BY	JH/RG	11/12	DATE REVISED

DESIGN OVERSIGHT
BEHZAD GOLEMOHAMMADI

STATE OF CALIFORNIA - DEPARTMENT OF TRANSPORTATION
Caltrans

LAST REVISION 00-00-00
DATE PLOTTED => 18-DEC-2012
TIME PLOTTED => 17:26

RELATIVE BORDER SCALE IS IN MILLIMETERS 0 20 40 60 80

DGN FILE => 04-0120f1_0350S66.dgn
USERNAME => Liorico

CU 04251

EA 0120F1

Dist	COUNTY	ROUTE	POST MILES TOTAL PROJECT	SHEET No.	TOTAL SHEETS
04	SF	80	13.2/13.9	350 S67	1204

REGISTERED ELECTRICAL ENGINEER 11/26/12

PLANS APPROVAL DATE 11-29-12

REGISTERED PROFESSIONAL ENGINEER BEN EDALATI No. 14761 Exp. 6/2013 ELECTRICAL STATE OF CALIFORNIA

THE STATE OF CALIFORNIA OR ITS OFFICERS OR AGENTS SHALL NOT BE RESPONSIBLE FOR THE ACCURACY OR COMPLETENESS OF ELECTRONIC COPIES OF THIS PLAN SHEET.

Caltrans now has a web site! To get to the web site, go to http://www.dot.ca.gov

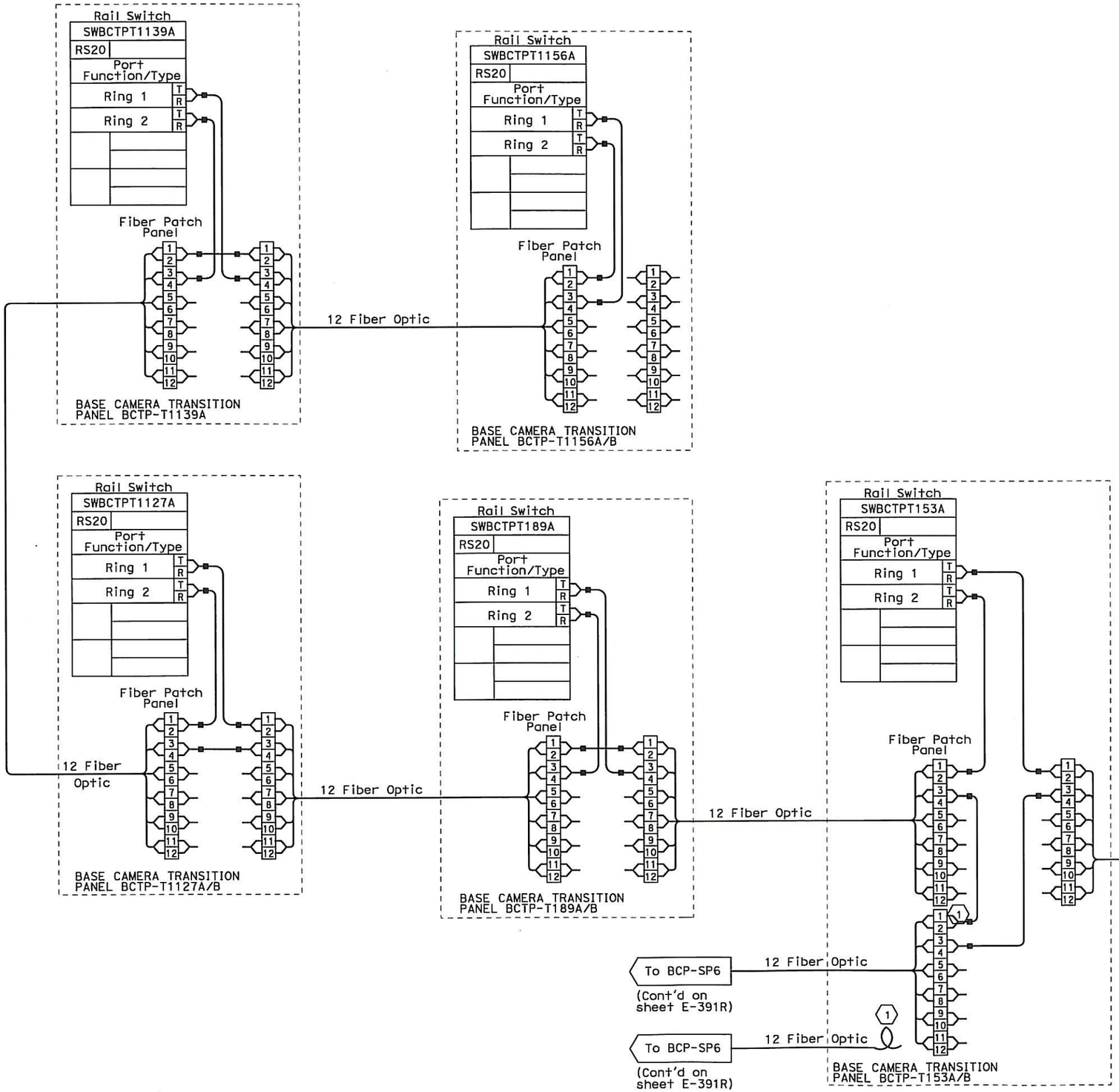

SHEET NOTES:

(1) Coil 5 m of fiber optic inside pull box.

NOTES:

1. References:
   - For cable block riser diagram, see sheets E-391K thru E-391N.

REQUEST FOR INFORMATION NOT ADDRESSED IN THIS CCO REMAIN IN FORCE					
0	12/18/12	Install Base CCTV System	RR JH	RG	15051
MARK	DATE	DESCRIPTIONS	BY	CH'D	CCO#
REVISIONS					

CONTRACT CHANGE ORDER NO. 15051
SHEET 79 OF 86

DETAILS
(BASE CCTV SYSTEM)
FIBER OPTIC CAMERA NETWORK
NO SCALE

E-391T

CALCULATED/ DESIGNED BY	JV	DATE 11/12	REVISED BY	DATE REVISED
CHECKED BY	JH/RG	11/12		

DESIGN OVERSIGHT
BEHZAD GOLEMOHAMMADI

STATE OF CALIFORNIA - DEPARTMENT OF TRANSPORTATION
Caltrans

THIS PLAN ACCURATE FOR ELECTRICAL WORK ONLY.

FOR REDUCED PLANS ORIGINAL SCALE IS IN MILLIMETERS 0 20 40 60 80

DGN FILE =>04-0120f1_0350S67.dgn
USERNAME =>Llorico

CU 04251 | EA 0120F1

LAST REVISION 00-00-00 | DATE PLOTTED => 18-DEC-2012 TIME PLOTTED => 17:26

Dist	COUNTY	ROUTE	POST MILES TOTAL PROJECT	SHEET No.	TOTAL SHEETS
04	SF	80	13.2/13.9	350 S68	1204

11/26/12
REGISTERED ELECTRICAL ENGINEER

11-29-12
PLANS APPROVAL DATE

REGISTERED PROFESSIONAL ENGINEER BEN EDALATI No. 14761 Exp. 6/2013 ELECTRICAL STATE OF CALIFORNIA

THE STATE OF CALIFORNIA OR ITS OFFICERS OR AGENTS SHALL NOT BE RESPONSIBLE FOR THE ACCURACY OR COMPLETENESS OF ELECTRONIC COPIES OF THIS PLAN SHEET.

Caltrans now has a web site! To get to the web site, go to http://www.dot.ca.gov

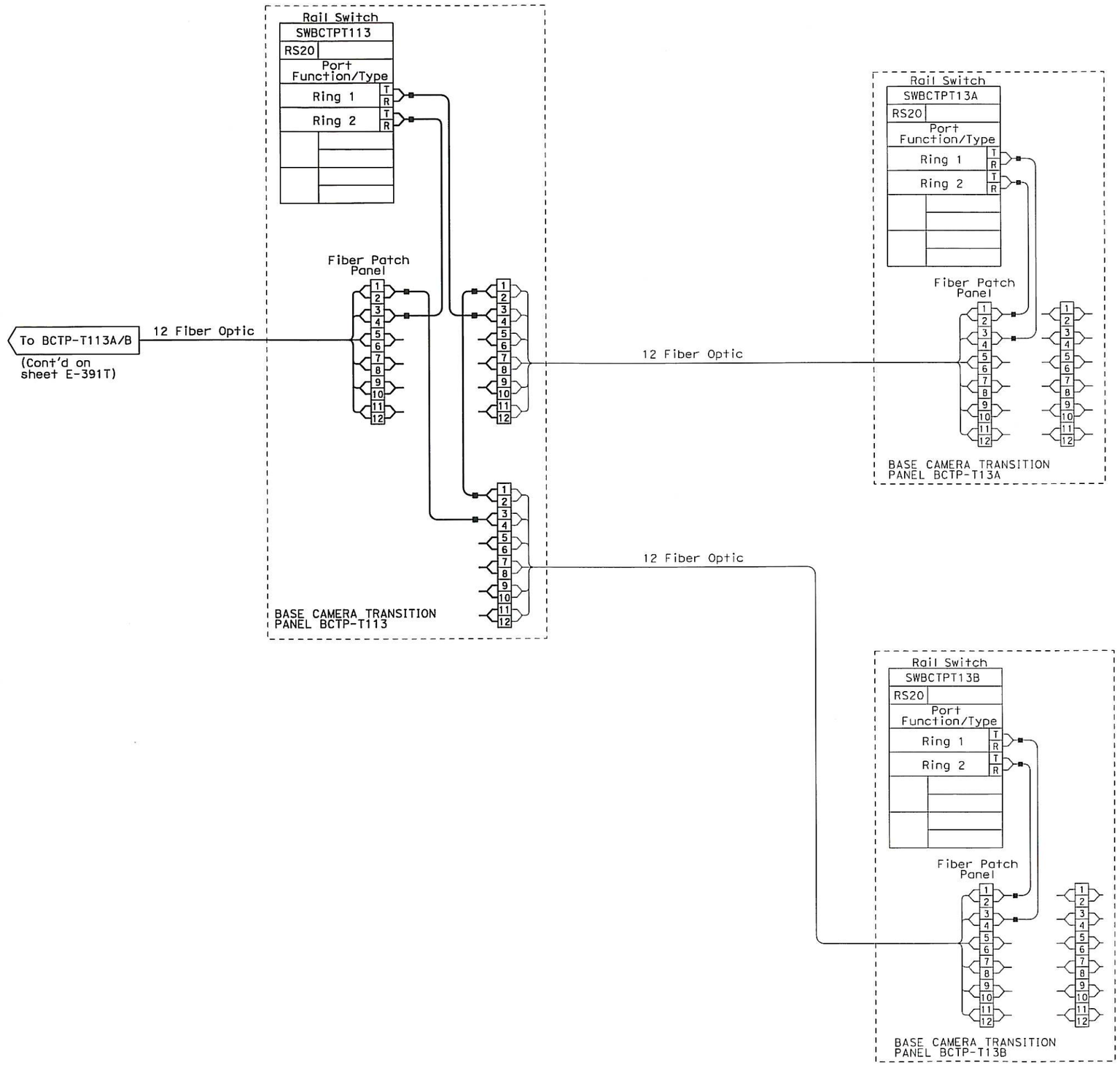

NOTES:

1. References:
   - For cable block riser diagram, see sheets E-391K thru E-391N.

REQUEST FOR INFORMATION NOT ADDRESSED IN THIS CCO REMAIN IN FORCE					
0	12/18/12	Install Base CCTV System	RR JH	RG	150S1
MARK	DATE	DESCRIPTIONS	BY	CH'D	CCO#
REVISIONS					

CONTRACT CHANGE ORDER NO. 150 S1
SHEET 80 OF 86

DETAILS
(BASE CCTV SYSTEM)
FIBER OPTIC CAMERA NETWORK
NO SCALE

E-391U

STATE OF CALIFORNIA - DEPARTMENT OF TRANSPORTATION
Caltrans

DESIGN OVERSIGHT: BEHZAD GOLEMOHAMMADI
CALCULATED/DESIGNED BY: JV — DATE 11/12 — REVISED BY
CHECKED BY: JH/RG — 11/12 — DATE REVISED

THIS PLAN ACCURATE FOR ELECTRICAL WORK ONLY.

FOR REDUCED PLANS ORIGINAL SCALE IS IN MILLIMETERS 0 20 40 60 80

DGN FILE =>04-0120f1_0350S68.dgn
USERNAME =>Llorico

CU 04251 | EA 0120F1

LAST REVISION 00-00-00
DATE PLOTTED => 18-DEC-2012
TIME PLOTTED => 17:26

DIST	COUNTY	ROUTE	KILOMETER POST TOTAL PROJECT	SHEET No	TOTAL SHEETS
04	SF	80	13.2/13.9	350 S69	1204

REGISTERED ELECTRICAL ENGINEER 11/26/12 DATE

11-29-12
PLANS APPROVAL DATE

REGISTERED PROFESSIONAL ENGINEER DAVID H. OTO No. 10699 Exp. 06/30/2013 ELECTRICAL STATE OF CALIFORNIA

PB AMERICAS, Inc.
A Parsons Brinckerhoff Company
303 Second St., Suite 700N
San Francisco, CA 94107-1317

The State of California or its officers or agents shall not be responsible for the accuracy or completeness of electronic copies of this plan sheet.

Caltrans now has a web site! To get to the web site, go to http://www.dot.ca.gov

Caltrans Metric

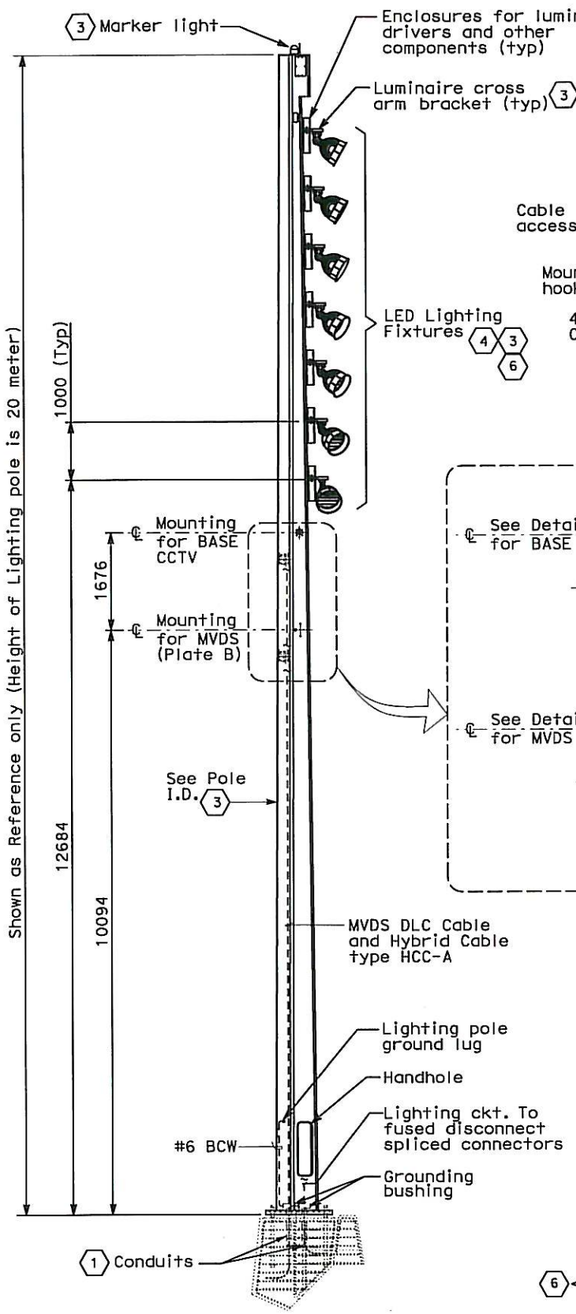

DETAIL 20-2

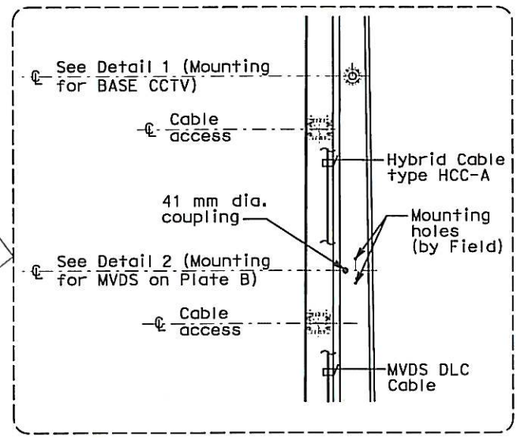

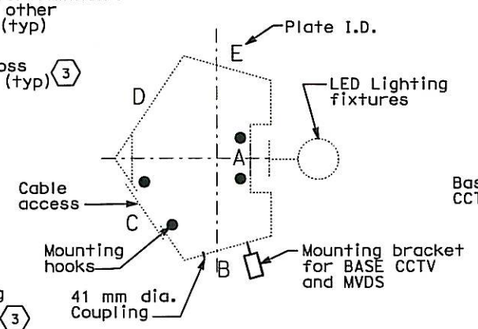

KEY PLAN

Pole I.D. Number-WB	Pole I.D. Number-EB
1031-2	2301-5
1301-5	2302-6
1304-1	2304-1
1305-2	2305-2

6 6

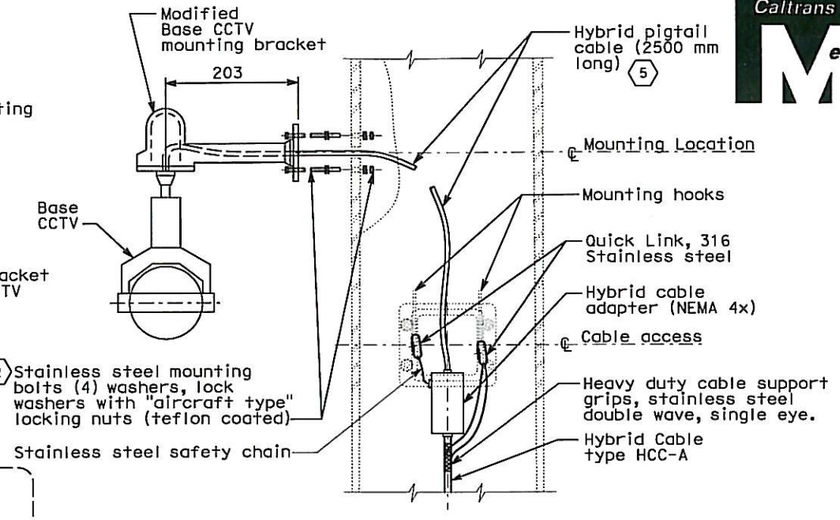

DETAIL 1 (MOUNTING FOR BASE CCTV)

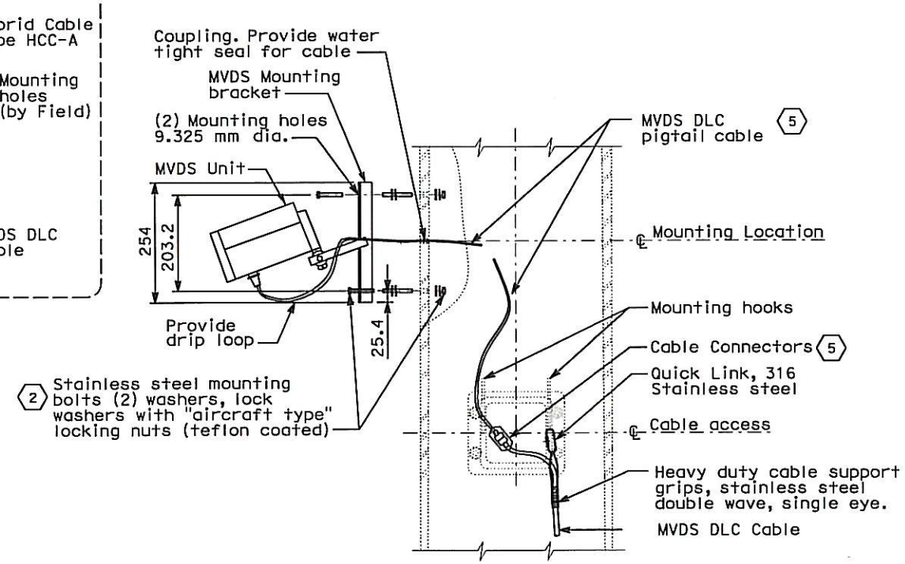

DETAIL 2 (MOUNTING FOR TOS MVDS) 6

SHEET NOTES:

1. For conduit location, see sheets E-386A thru E-386F for Westbound and sheets E-388A thru E-388F for Eastbound. The Contractor shall install all the cables associated with the installation of each Lighting pole.
2. Prior to installation, the Contractor to field verify the components provided for mounting attach devices.
3. The Roadway Lighting pole are State furnished. Prior to installation, the Contractor shall inspect and verify the associated components of the Lighting Pole assembly which may require field installation.
4. The type of lighting fixtures mounted on the lighting pole, the aiming point and directions of each lighting fixtures towards the roadway shall be provided by the lighting pole/fixture manufacturer. This information shall be provided to the Contractor by Caltrans.
5. Provide cable slack (3 loop turns-not shown) before the cable connectors.
6. Shown for reference only.

REQUEST FOR INFORMATION NOT ADDRESSED IN THIS CCO REMAIN IN FORCE

MARK	DATE	DESCRIPTIONS	BY	CH'D	CCO#
0	12/18/12	Install Base CCTV System	JH	RG	150S1

REVISIONS

CONTRACT CHANGE ORDER NO. 150S1
SHEET 81 OF 86

DETAILS
20 METER ROADWAY LIGHTING POLE WITH BASE CCTV AND MVDS INSTALLATION
NO SCALE

E-391V

CALCULATED/DESIGNED BY	JH	DATE 11/12	REVISED BY
CHECKED BY	RG	11/12	DATE REVISED

DESIGN OVERSIGHT
BEHZAD GOLEMOHAMMADI

STATE OF CALIFORNIA - DEPARTMENT OF TRANSPORTATION
Caltrans

LAST REVISION 00-00-00
DATE PLOTTED => 18-DEC-2012
TIME PLOTTED => 17:25

THIS PLAN ACCURATE FOR ELECTRICAL WORK ONLY.

ALL DIMENSIONS ARE IN MILLIMETERS UNLESS OTHERWISE SHOWN

FOR REDUCED PLANS ORIGINAL SCALE IS IN MILLIMETERS 0 20 40 60 80

DGN FILE =>04-0120f1_0350S69.dgn
USERNAME =>Llorico

CU 04251 EA 0120F1

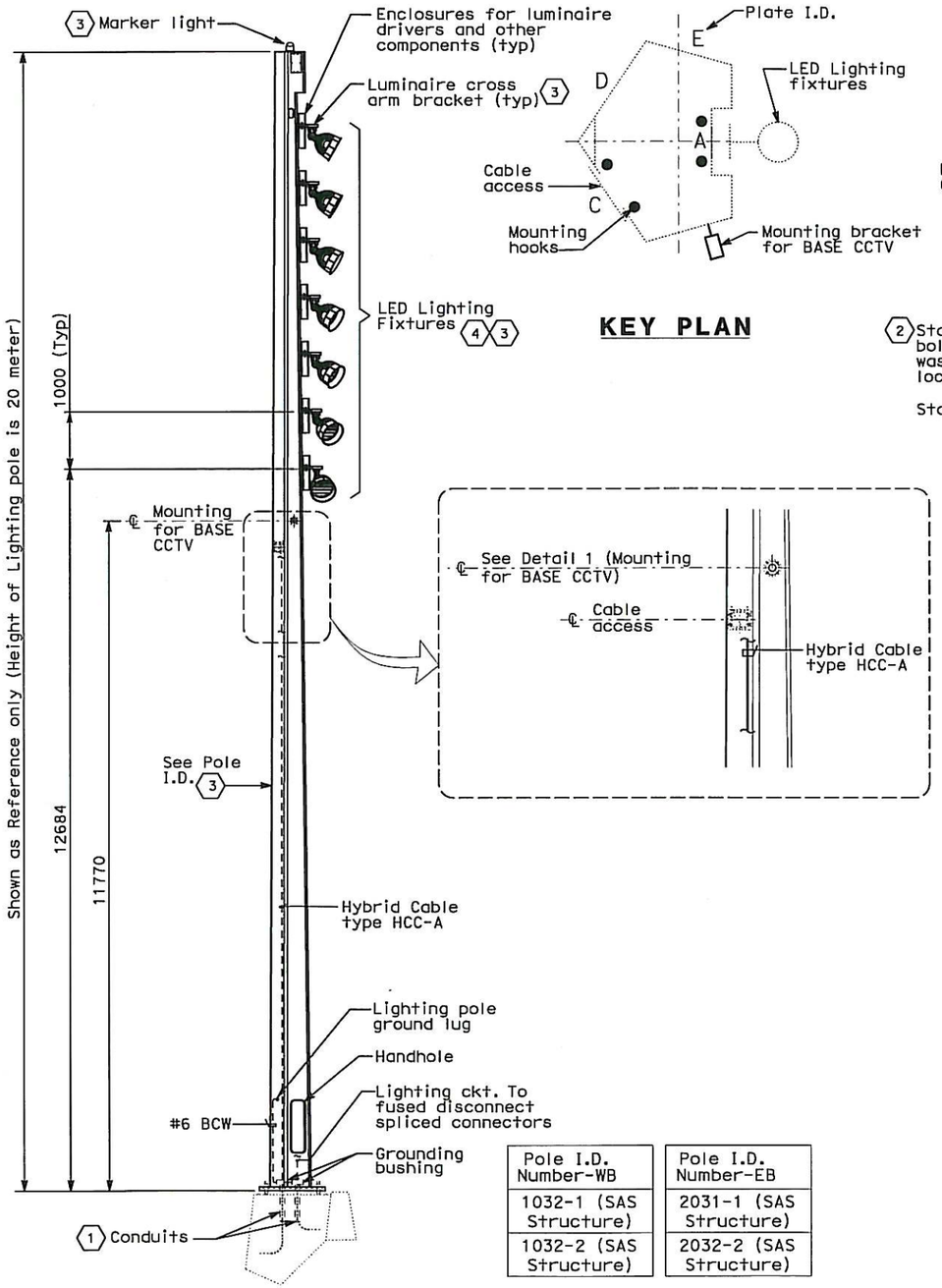

Pole I.D. Number-WB	Pole I.D. Number-EB
1032-1 (SAS Structure)	2031-1 (SAS Structure)
1032-2 (SAS Structure)	2032-2 (SAS Structure)

DETAIL 20-4

KEY PLAN

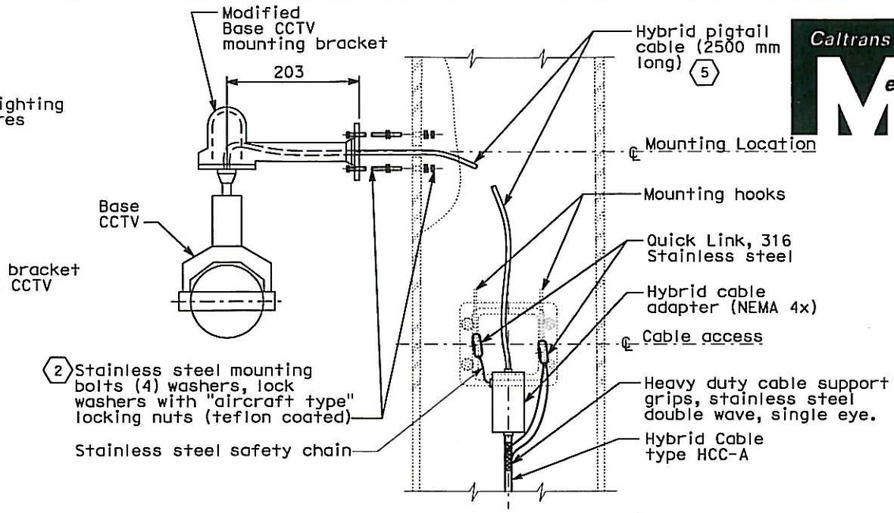

DETAIL 1 (MOUNTING FOR BASE CCTV)

DIST	COUNTY	ROUTE	KILOMETER POST TOTAL PROJECT	SHEET No	TOTAL SHEETS
04	SF	80	13.2/13.9	350 S70	1204

REGISTERED ELECTRICAL ENGINEER 11/26/12 DATE

11-29-12
PLANS APPROVAL DATE

REGISTERED PROFESSIONAL ENGINEER DAVID H. OTO No. 10699 Exp. 06/30/2013 ELECTRICAL STATE OF CALIFORNIA

PB AMERICAS, Inc.
A Parsons Brinckerhoff Company
303 Second St., Suite 700N
San Francisco, CA 94107-1317

The State of California or its officers or agents shall not be responsible for the accuracy or completeness of electronic copies of this plan sheet.

Caltrans now has a web site! To get to the web site, go to http://www.dot.ca.gov

Caltrans Metric

SHEET NOTES:

(1) For conduit location, see sheets E-386A thru E-386F for Westbound and sheets E-388A thru E-388F for Eastbound. The Contractor shall install all the cables associated with the installation of each Lighting pole.

(2) Prior to installation, the Contractor to field verify the components provided for mounting attach devices.

(3) The Roadway Lighting pole are State furnished. Prior to installation, the Contractor shall inspect and verify the associated components of the Lighting Pole assembly which may require field installation.

(4) The type of lighting fixtures mounted on the lighting pole, the aiming point and directions of each lighting fixtures towards the roadway shall be provided by the lighting pole/fixture manufacturer. This information shall be provided to the Contractor by Caltrans.

(5) Provide cable slack (3 loop turns-not shown) before the cable connectors.

(6) Shown for reference only.

REQUEST FOR INFORMATION NOT ADDRESSED IN THIS CCO REMAIN IN FORCE					
0	12/18/12	Install Base CCTV System	JH	RG	150S1
MARK	DATE	DESCRIPTIONS	BY	CH'D	CCO#
REVISIONS					

CONTRACT CHANGE ORDER NO. 150 S1
SHEET 82 OF 86

DETAILS
20 METER ROADWAY LIGHTING POLE WITH BASE CCTV INSTALLATION
NO SCALE

E-391W

DATE	JH	RG	11/12	REVISED BY
CALCULATED/DESIGNED BY				DATE REVISED
CHECKED BY				

DESIGN OVERSIGHT
BEHZAD GOLEMOHAMMADI

STATE OF CALIFORNIA - DEPARTMENT OF TRANSPORTATION
Caltrans

THIS PLAN ACCURATE FOR ELECTRICAL WORK ONLY.

ALL DIMENSIONS ARE IN MILLIMETERS UNLESS OTHERWISE SHOWN

FOR REDUCED PLANS ORIGINAL SCALE IS IN MILLIMETERS 0 20 40 60 80

DGN FILE =>04-0120f1_0350S70.dgn
USERNAME =>Llorico

CU 04251

EA 0120F1

LAST REVISION 00-00-00
DATE PLOTTED => 18-DEC-2012
TIME PLOTTED => 17:26

DIST	COUNTY	ROUTE	KILOMETER POST TOTAL PROJECT	SHEET No	TOTAL SHEETS
04	SF	80	13.2/13.9	350 S71R1	1204

REGISTERED ELECTRICAL ENGINEER 11/26/12 DATE

11-29-12
PLANS APPROVAL DATE

REGISTERED PROFESSIONAL ENGINEER DAVID H. OTO No. 10699 Exp. 06/30/2013 ELECTRICAL STATE OF CALIFORNIA

PB AMERICAS, Inc.
A Parsons Brinckerhoff Company
303 Second St., Suite 700N
San Francisco, CA 94107-1317

The State of California or its officers or agents shall not be responsible for the accuracy or completeness of electronic copies of this plan sheet.

Caltrans now has a web site! To get to the web site, go to http://www.dot.ca.gov

Caltrans Metric

SHEET NOTES:

1. For Structural Mounting Details, see sheet AS-32.
2. The Contractor shall coil 5 meter length of cables inside pull box.

△1 Field to locate and anchor pull box to suit field condition.

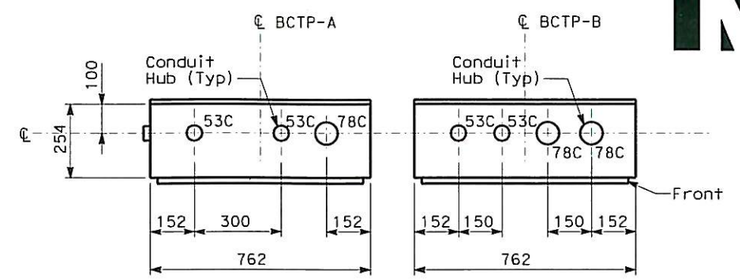

PLAN
(BOTTOM OF BCTP PANEL)

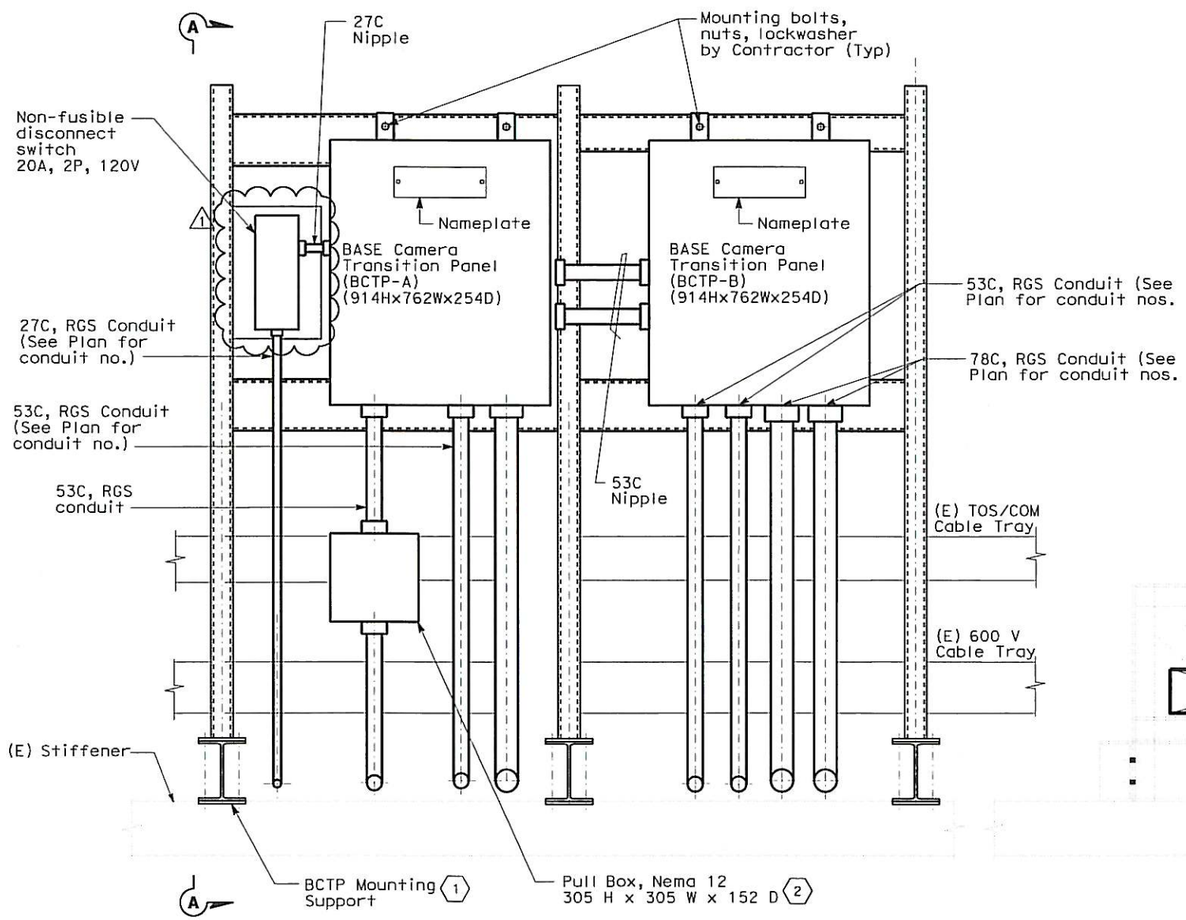

ELEVATION

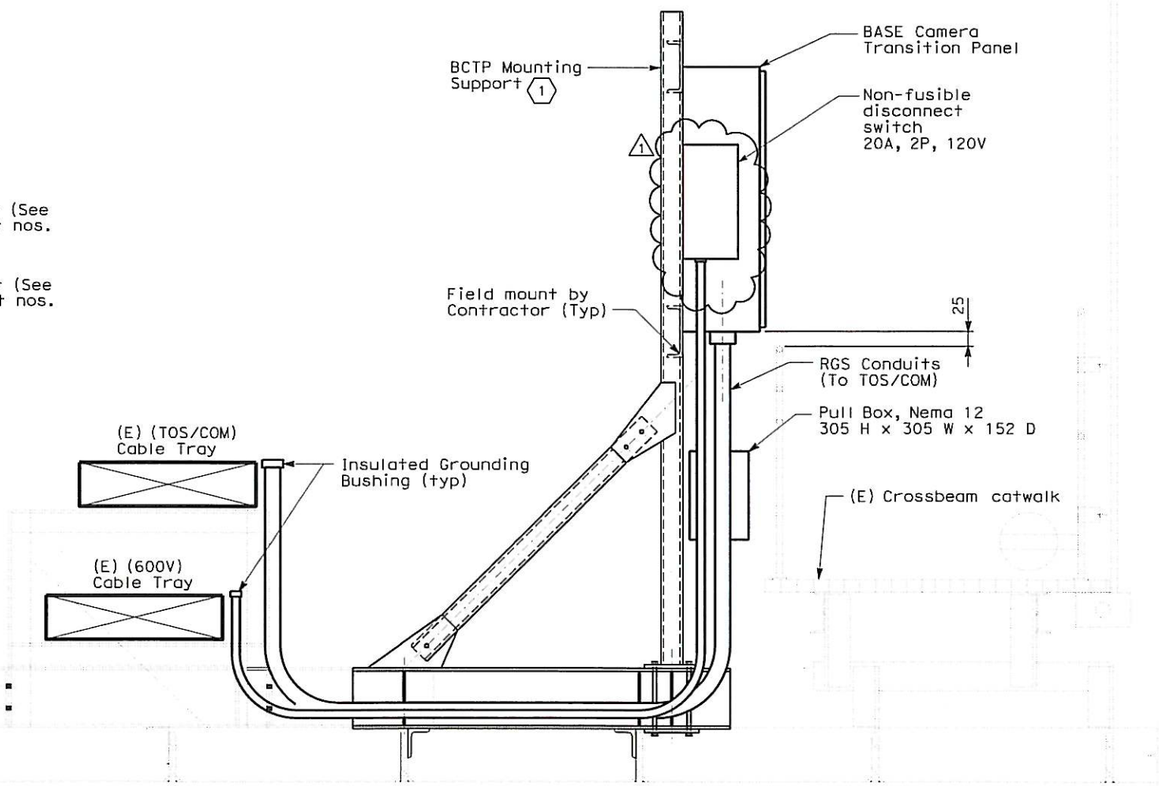

SECTION A-A

REGISTERED PROFESSIONAL ENGINEER DAVID H. OTO No. 10699 Exp. 06/30/2013 ELECTRICAL STATE OF CALIFORNIA

△1 FOR REVISION ONLY

REQUEST FOR INFORMATION NOT ADDRESSED IN THIS CCO REMAIN IN FORCE					
△1	05/30/13	Install Base CCTV System	RR	RG	150S1
△0	12/18/12	Install Base CCTV System	RR	RG	150S1
MARK	DATE	DESCRIPTIONS	BY	CH'D	CCO#
		REVISIONS			

CONTRACT CHANGE ORDER NO. 150 S1
SHEET 83 OF 86

DETAILS
BCTP MOUNTING DETAILS (BASE CCTV SYSTEM)
NO SCALE

E-391X

THIS PLAN ACCURATE FOR ELECTRICAL WORK ONLY.

ALL DIMENSIONS ARE IN MILLIMETERS UNLESS OTHERWISE SHOWN

FOR REDUCED PLANS ORIGINAL SCALE IS IN MILLIMETERS 0 20 40 60 80

DGN FILE =>04-0120f1_0350S71r01.dgn
USERNAME =>Llorico

CU 04251 | EA 0120F1

DATE PLOTTED => 29-MAY-2013
TIME PLOTTED => 14:37

LAST REVISION 05-30-13

STATE OF CALIFORNIA - DEPARTMENT OF TRANSPORTATION
Caltrans

DESIGN OVERSIGHT: BEHZAD GOLEMOHAMMADI

CALCULATED/DESIGNED BY: RR DATE 11/12
CHECKED BY: RG 11/12

REVISED BY | DATE REVISED

DIST	COUNTY	ROUTE	KILOMETER POST TOTAL PROJECT	SHEET No	TOTAL SHEETS
04	SF	80	13.2/13.9	350 S72	1204

REGISTERED ELECTRICAL ENGINEER 11/26/12 DATE

11-29-12
PLANS APPROVAL DATE

REGISTERED PROFESSIONAL ENGINEER DAVID H. OTO No. 10699 Exp. 06/30/2013 ELECTRICAL STATE OF CALIFORNIA

PB AMERICAS, Inc.
A Parsons Brinckerhoff Company
303 Second St., Suite 700N
San Francisco, CA 94107-1317

The State of California or its officers or agents shall not be responsible for the accuracy or completeness of electronic copies of this plan sheet.

Caltrans now has a web site! To get to the web site, go to http://www.dot.ca.gov

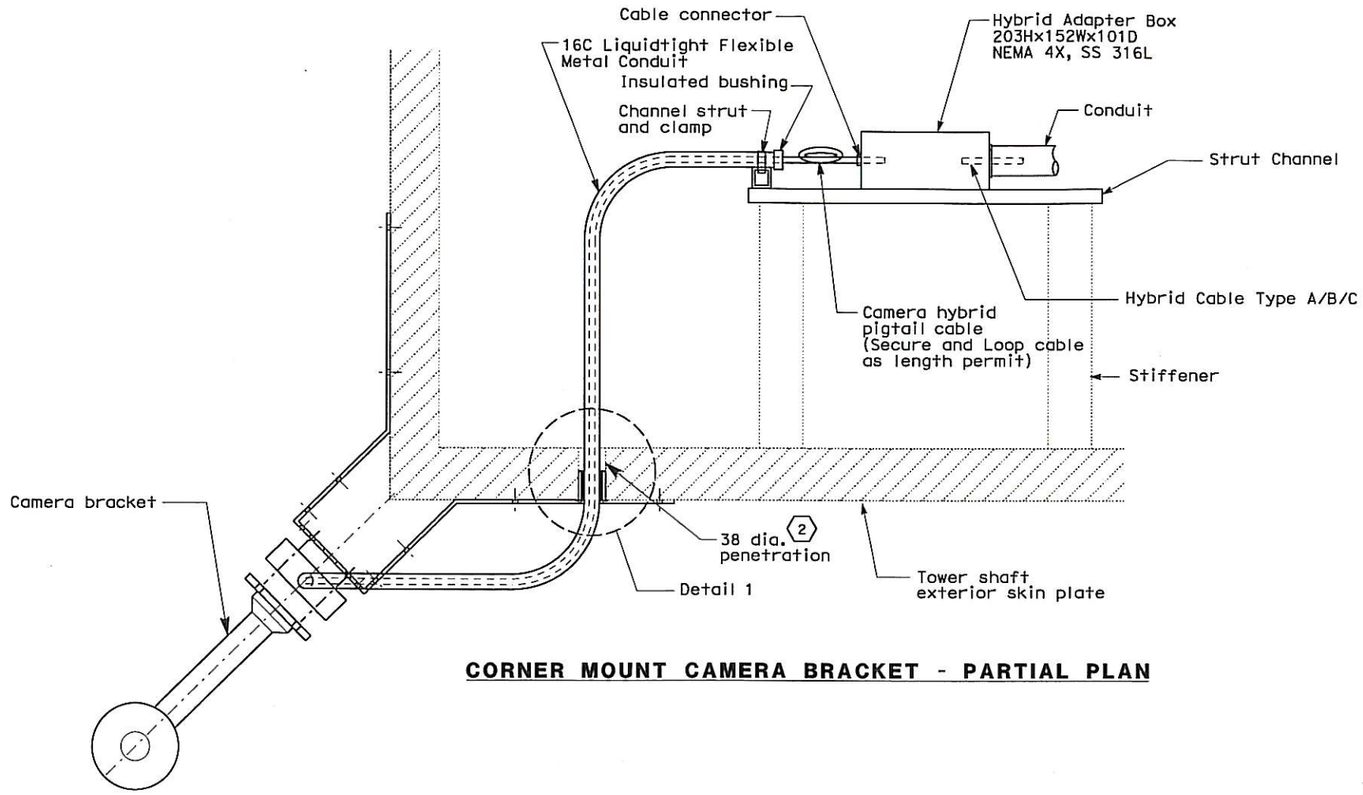

CORNER MOUNT CAMERA BRACKET - PARTIAL PLAN

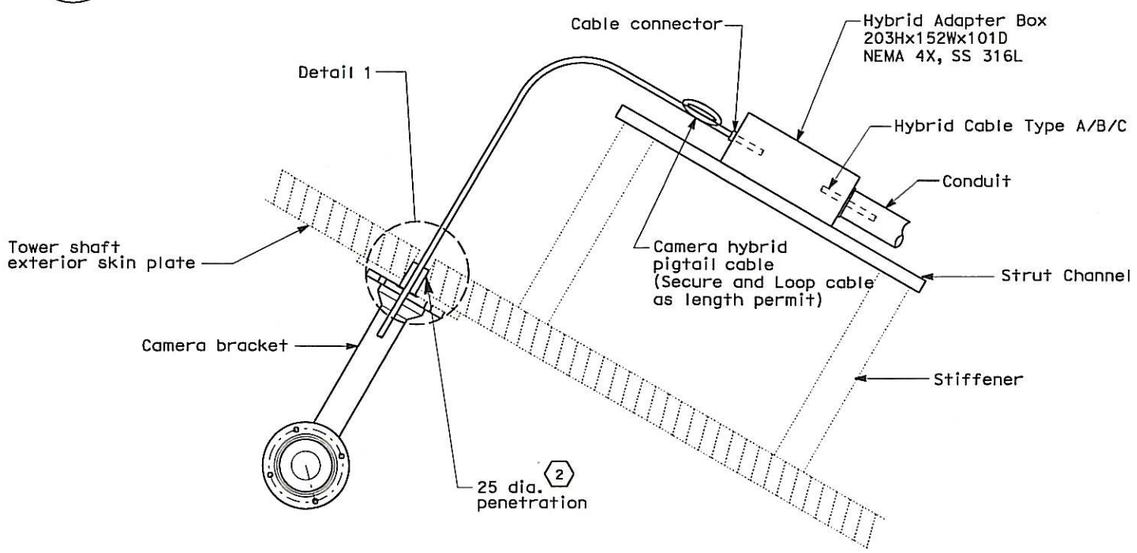

WALL MOUNT CAMERA BRACKET - PARTIAL PLAN

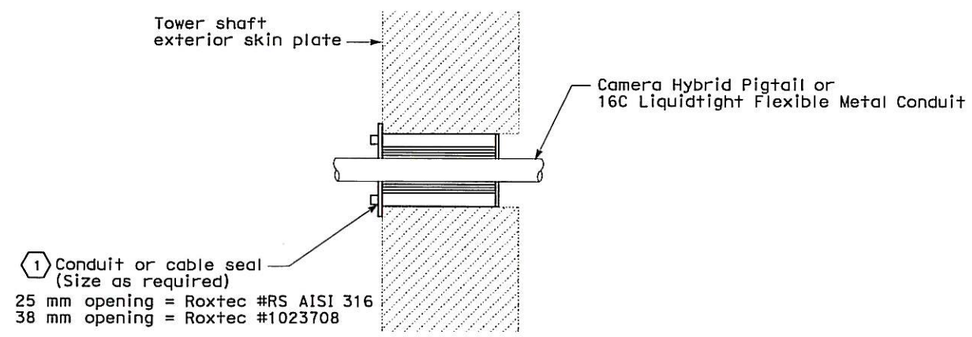

DETAIL 1

SHEET NOTES:

1. Conduit seal shall be installed on the tower exterior skin plate of the shaft. If not feasible or due to maintenance accessibility issue, seal may be installed on the interior face plate of the shaft.
2. For location of penetrations, refer to drawings E-390L, E-390M, E-390N and E-390P.

REQUEST FOR INFORMATION NOT ADDRESSED IN THIS CCO REMAIN IN FORCE

MARK	DATE	DESCRIPTIONS	BY	CH'D	CCO#
0	12/18/12	Install Base CCTV System	RR	RG	150S1

REVISIONS

CONTRACT CHANGE ORDER NO. 150 S1
SHEET 84 OF 86

DETAILS
TOWER CAMERA AND CONDUIT INSTALLATION (BASE CCTV SYSTEM)
NO SCALE

E-391Y

STATE OF CALIFORNIA - DEPARTMENT OF TRANSPORTATION	DESIGN OVERSIGHT	CALCULATED/DESIGNED BY JH	DATE 11/12	REVISED BY
Caltrans	BEHZAD GOLEMOHAMMADI	CHECKED BY RG	11/12	DATE REVISED

THIS PLAN ACCURATE FOR ELECTRICAL WORK ONLY.

ALL DIMENSIONS ARE IN MILLIMETERS UNLESS OTHERWISE SHOWN

FOR REDUCED PLANS ORIGINAL SCALE IS IN MILLIMETERS 0 20 40 60 80

DGN FILE =>04-0120f1_0350S72.dgn
USERNAME =>Llorico

CU 04251 | EA 0120F1

LAST REVISION 00-00-00 | DATE PLOTTED => 18-DEC-2012 | TIME PLOTTED => 17:27

DIST	COUNTY	ROUTE	KILOMETER POST TOTAL PROJECT	SHEET No	TOTAL SHEETS
04	SF	80	13.2/13.9	350 S73R1	1204

REGISTERED ELECTRICAL ENGINEER 11/26/12 DATE

11-29-12
PLANS APPROVAL DATE

REGISTERED PROFESSIONAL ENGINEER DAVID H. OTO No. 10699 Exp. 06/30/2013 ELECTRICAL STATE OF CALIFORNIA

PB AMERICAS, Inc.
A Parsons Brinckerhoff Company
303 Second St., Suite 700N
San Francisco, CA 94107-1317

The State of California or its officers or agents shall not be responsible for the accuracy or completeness of electronic copies of this plan sheet.

Caltrans now has a web site! To get to the web site, go to http://www.dot.ca.gov

Caltrans Metric

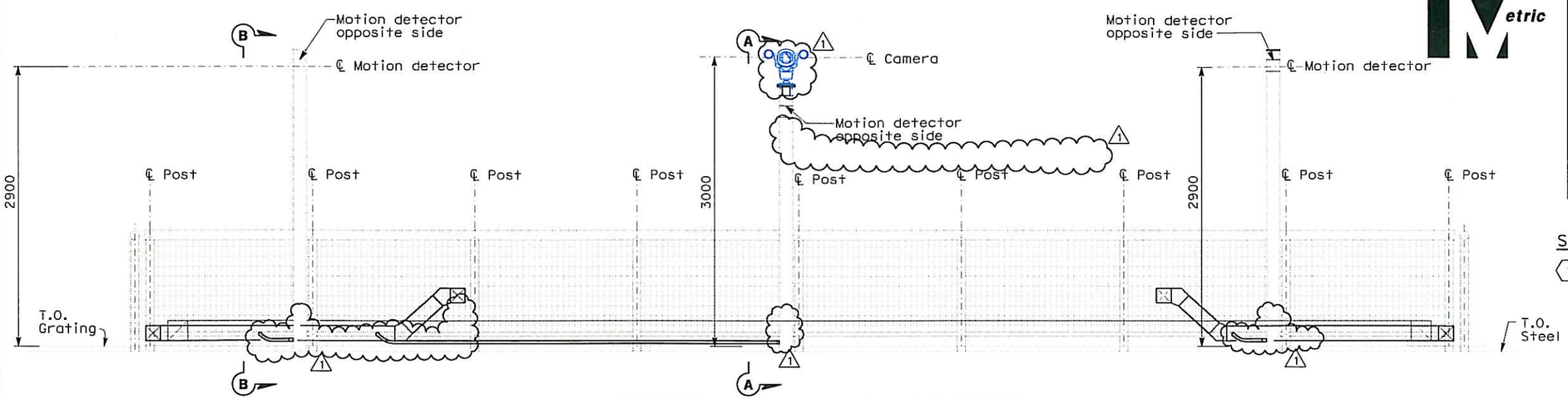

SERVICE PLATFORM ELEVATION
SCALE: 1:25

SHEET NOTES:

1. Contractor shall field drill (see AS-5B) conduit opening on the pole to suit field condition.

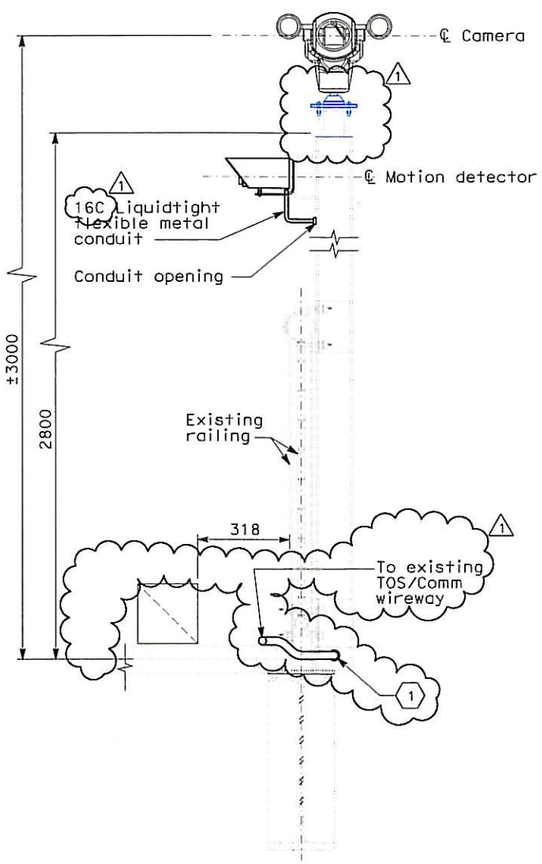

AT CAMERA

SECTION A-A
SCALE: 1:10

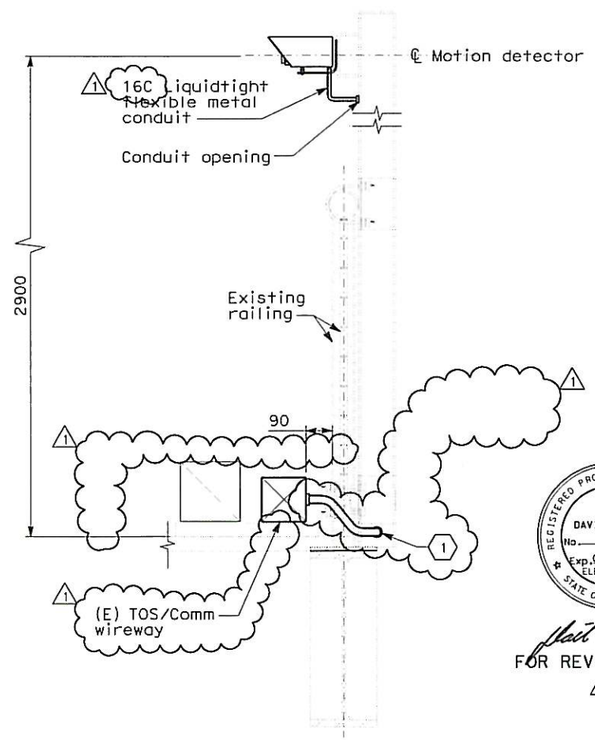

AT MOTION DETECTOR

SECTION B-B
SCALE: 1:10

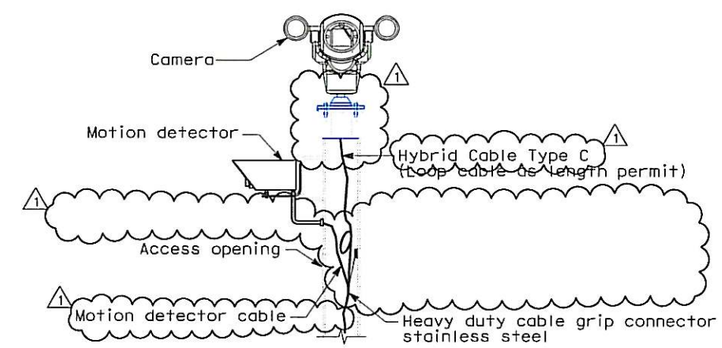

DETAIL 1
SCALE: 1:10

REGISTERED PROFESSIONAL ENGINEER DAVID H. OTO No. 10699 Exp. 06/30/2013 ELECTRICAL STATE OF CALIFORNIA

FOR REVISION ONLY

REQUEST FOR INFORMATION NOT ADDRESSED IN THIS CCO REMAIN IN FORCE					
1	05/30/13	Install Base CCTV System	RR	RG	150S1
0	12/18/12	Install Base CCTV System	JH	RG	150S1
MARK	DATE	DESCRIPTIONS	BY	CH'D	CCO#
		REVISIONS			

CONTRACT CHANGE ORDER NO. 150 S1
SHEET 85 OF 86

DETAILS
BASE CCTV CAMERA MOUNTING (SERVICE PLATFORMS)
BASE CCTV INSTALLATION
SCALE: AS NOTED

E-391Z

REVISED BY	DATE REVISED
JH	11/12
RG	11/12

CALCULATED/DESIGNED BY: JH
CHECKED BY: RG

DESIGN OVERSIGHT: BEHZAD GOLEMOHAMMADI

STATE OF CALIFORNIA - DEPARTMENT OF TRANSPORTATION
Caltrans

LAST REVISION 05-30-13
DATE PLOTTED => 29-MAY-2013
TIME PLOTTED => 14:37

THIS PLAN ACCURATE FOR ELECTRICAL WORK ONLY.

ALL DIMENSIONS ARE IN MILLIMETERS UNLESS OTHERWISE SHOWN

FOR REDUCED PLANS ORIGINAL SCALE IS IN MILLIMETERS 0 20 40 60 80

DGN FILE =>04-0120f1_0350S73r01.dgn
USERNAME =>Llorico

CU 04251 | EA 0120F1

DIST	COUNTY	ROUTE	KILOMETER POST TOTAL PROJECT	SHEET No	TOTAL SHEETS
04	SF	80	13.2/13.9	350 S74R1	1204

REGISTERED ELECTRICAL ENGINEER 11/26/12 DATE

11/29/12
PLANS APPROVAL DATE

REGISTERED PROFESSIONAL ENGINEER DAVID H. OTO No. 10699 Exp. 06/30/2013 ELECTRICAL STATE OF CALIFORNIA

PB AMERICAS, Inc.
A Parsons Brinckerhoff Company
303 Second St., Suite 700N
San Francisco, CA 94107-1317

The State of California or its officers or agents shall not be responsible for the accuracy or completeness of electronic copies of this plan sheet.

Caltrans now has a web site! To get to the web site, go to http://www.dot.ca.gov

Caltrans Metric

SHEET NOTES:

1. For Structural Mounting Details, see sheet AS-33.
2. The Contractor shall coil 5 meter length of cables inside pull box.

△1 Field to locate and anchor pull box to suit field condition.

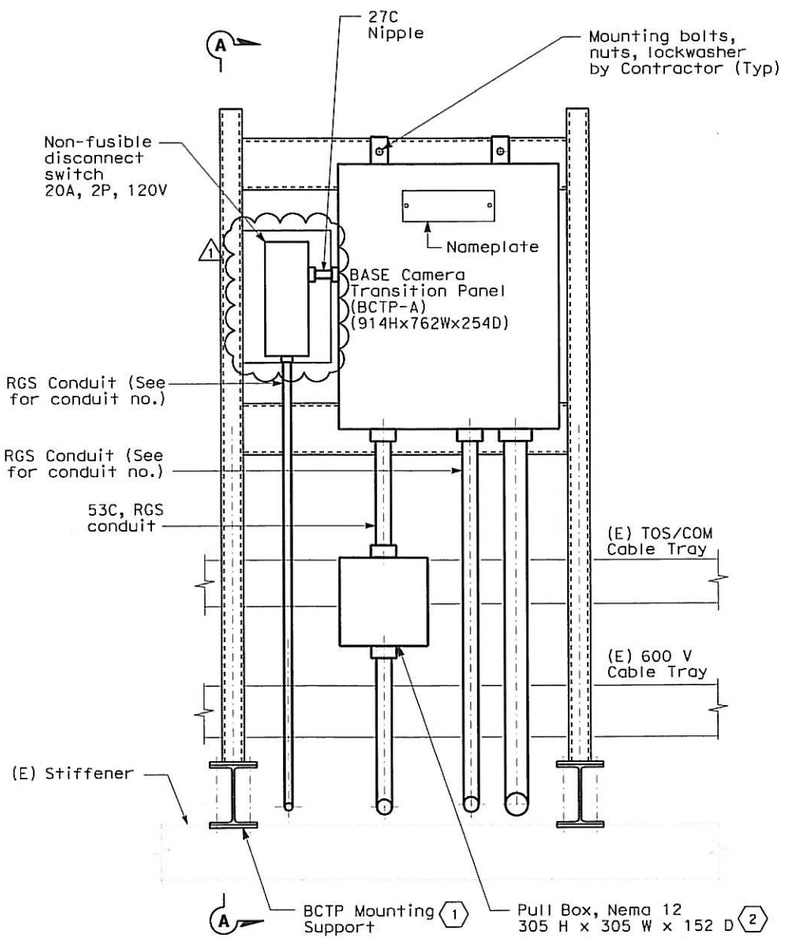

ELEVATION

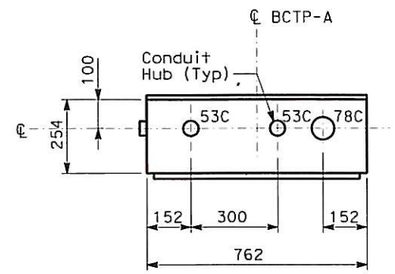

PLAN
(BOTTOM OF BCTP PANEL)

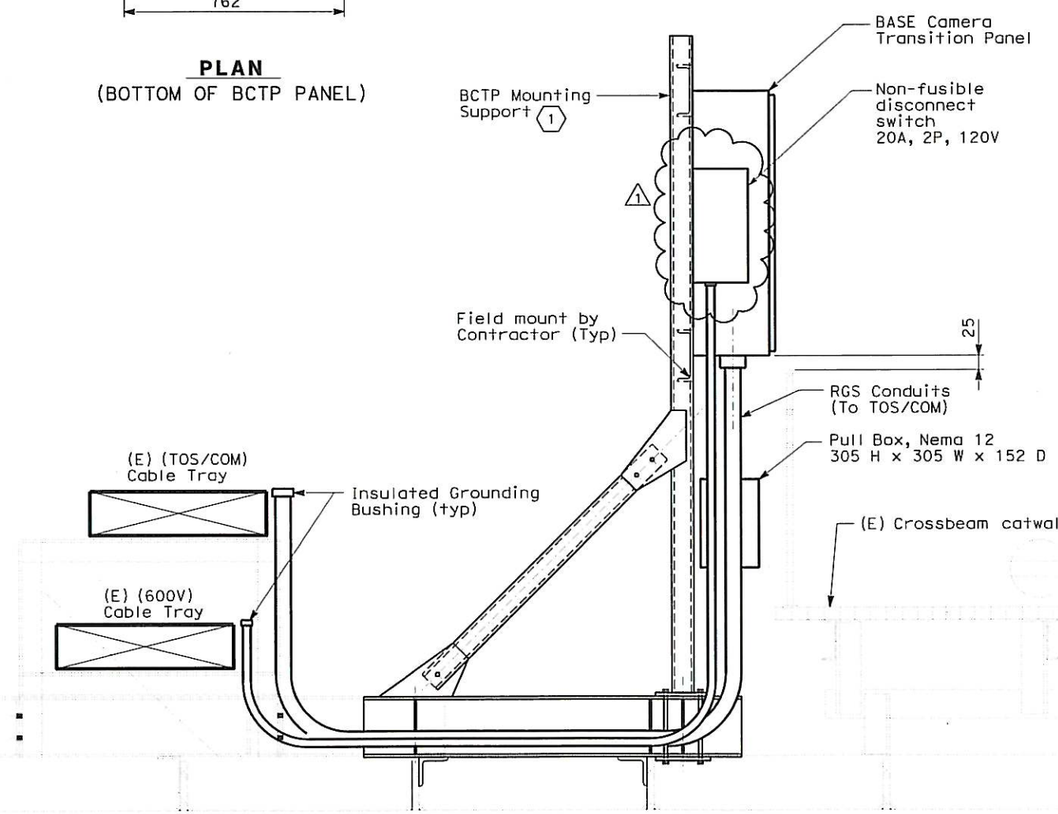

SECTION A-A

REGISTERED PROFESSIONAL ENGINEER DAVID H. OTO No. 10699 Exp. 06/30/2013 ELECTRICAL STATE OF CALIFORNIA

△1 FOR REVISION ONLY

THIS PLAN ACCURATE FOR ELECTRICAL WORK ONLY.

REQUEST FOR INFORMATION NOT ADDRESSED IN THIS CCO REMAIN IN FORCE					
△1	05/30/13	Install Base CCTV System	RR	RG	150S1
△0	12/18/12	Install Base CCTV System	RR	RG	150S1
MARK	DATE	DESCRIPTIONS	BY	CH'D	CCO#
		REVISIONS			

CONTRACT CHANGE ORDER NO. 150 S1
SHEET 86 OF 86

ALL DIMENSIONS ARE IN MILLIMETERS UNLESS OTHERWISE SHOWN

DETAILS
BCTP MOUNTING DETAILS (BASE CCTV SYSTEM)
NO SCALE

E-392A

DATE	REVISED BY	DATE REVISED
11/12	RR	RG 11/12

CALCULATED/DESIGNED BY RR
CHECKED BY RG

DESIGN OVERSIGHT
BEHZAD GOLEMOHAMMADI

STATE OF CALIFORNIA - DEPARTMENT OF TRANSPORTATION
Caltrans

LAST REVISION 05-30-13
DATE PLOTTED => 29-MAY-2013
TIME PLOTTED => 14:37

FOR REDUCED PLANS ORIGINAL SCALE IS IN MILLIMETERS 0 20 40 60 80

DGN FILE =>04-0120f1_0350S74r01.dgn
USERNAME =>Llorico

CU 04251 | EA 0120F1