DIST	COUNTY	ROUTE	KILOMETER POST TOTAL PROJECT	SHEET No	TOTAL SHEETS
04	SF	80	13.2/13.9	96R1	1204

REGISTERED ELECTRICAL ENGINEER 12/19/02 DATE

12-6-04
PLANS APPROVAL DATE

REGISTERED PROFESSIONAL ENGINEER JENS ERLINGSSON No. 8249 Exp. 9/30/06 ELECTRICAL STATE OF CALIFORNIA

PB POWER, Inc.
A Parsons Brinckerhoff Company
303 Second St., Suite 700N
San Francisco, CA 94107-1317

The State of California or its officers or agents shall not be responsible for the accuracy or completeness of electronic copies of this plan sheet.

Caltrans now has a web site! To get to the web site, go to http://www.dot.ca.gov

Caltrans Metric

REGISTERED PROFESSIONAL ENGINEER SYN YEE CHIN No. 18186 Exp. 09/30/2011 ELECTRICAL STATE OF CALIFORNIA

Syn Yee Chin
FOR REVISION ONLY
1

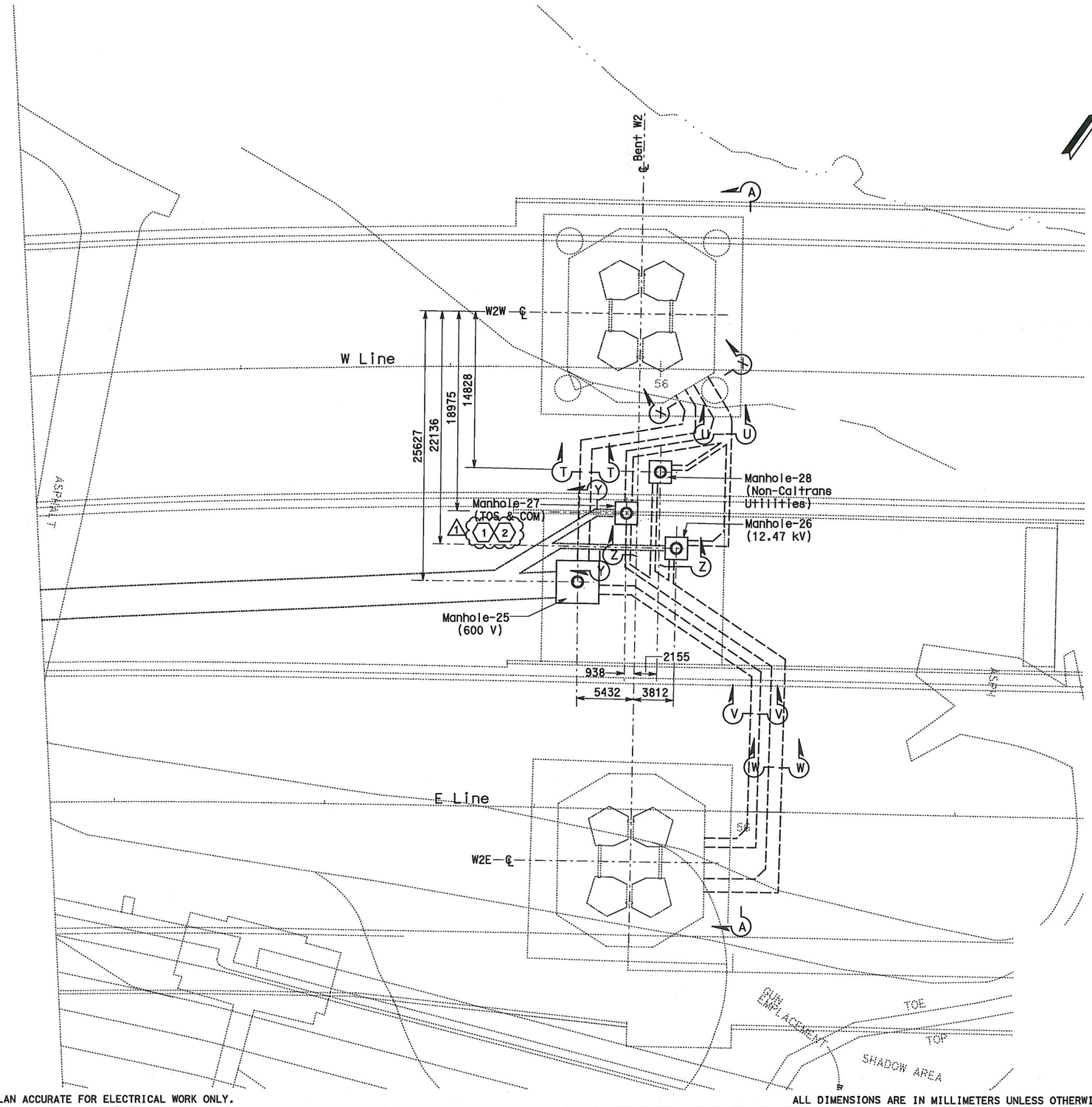

NOTES:

1. References:
   - For manhole plans and sections, see sheets E-14 through E-16.
   - For typical manhole and duct bank details, see sheet E-17.
   - For duct bank sections, see sheets E-19 and E-23.
   - For pier W2W plans and sections, see sheet E-20.
   - For pier W2E plans and sections, see sheet E-21.
   - For circuit and conduit/cable tray schedules, see sheets starting at E-401.
2. For other related work, not shown on this sheet, see Electrical Special Provisions.
3. For location of manholes, see utility sheets.
4. For duct bank anchors on slopes, see utility sheets.

1 SHEET NOTES:

1. Furnish and install 4-25.4 mm innerducts inside TOS/COM conduit (0560) from MH-27 to Bent W2.
2. Furnish and install BASE fiber optic cable in innerduct. See sheet E-1100.

REQUEST FOR INFORMATION NOT ADDRESSED IN THIS CCO REMAIN IN FORCE

MARK	DATE	DESCRIPTIONS	BY	CH'D	CCO#
1	03/01/11	BASE INTEGRATION	RSB	WB	150

REVISIONS

CONTRACT CHANGE ORDER NO. 150
SHEET 2 OF 42

UNDERGROUND
DUCT BANKS AND MANHOLES
SCALE 1:200

E-11

THIS PLAN ACCURATE FOR ELECTRICAL WORK ONLY.

ALL DIMENSIONS ARE IN MILLIMETERS UNLESS OTHERWISE SHOWN

FOR REDUCED PLANS ORIGINAL 0 20 40 60 80

DGN FILE =>04-0120f1 0096R01.dgn

DATE	REVISED BY	DATE	REVISED BY
11/04	--	--/--	DATE REVISED

CALCULATED/DESIGNED BY AB
CHECKED BY --

DESIGN OVERSIGHT

STATE OF CALIFORNIA - DEPARTMENT OF TRANSPORTATION

Caltrans

DRAFT 1 (03/01/11)

LAST REVISION DATE PLOTTED => 25-FEB-2011

DIST	COUNTY	ROUTE	KILOMETER POST TOTAL PROJECT	SHEET No	TOTAL SHEETS
04	SF	80	13.2/13.9	99R2	1024

REGISTERED ELECTRICAL ENGINEER 12/19/02 DATE

12-6-04
PLANS APPROVAL DATE

REGISTERED PROFESSIONAL ENGINEER JENS ERLINGSSON No. 8249 Exp. 9/30/06 ELECTRICAL STATE OF CALIFORNIA

PB POWER, Inc.
A Parsons Brinckerhoff Company
303 Second St., Suite 700N
San Francisco, CA 94107-1317

The State of California or its officers or agents shall not be responsible for the accuracy or completeness of electronic copies of this plan sheet.

Caltrans now has a web site! To get to the web site, go to http://www.dot.ca.gov

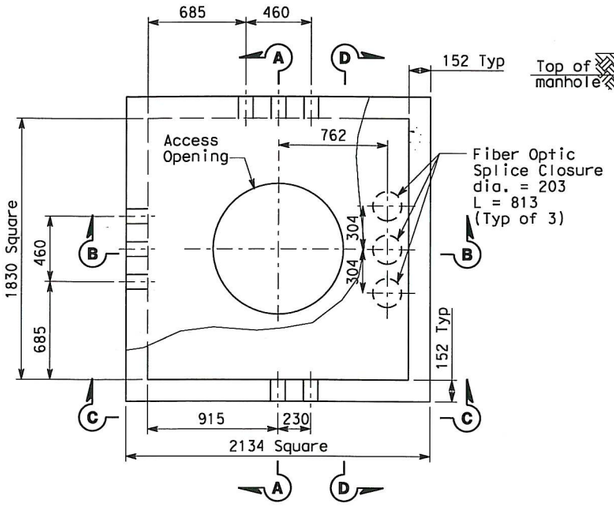

PLAN-MANHOLE-27
SCALE: 1:20 (TOS & COMMUNICATION)

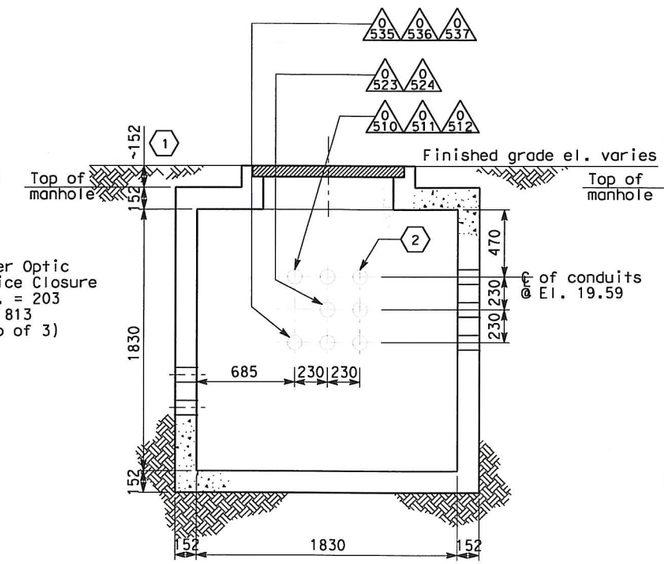

SECTION A-A
SCALE: 1:20

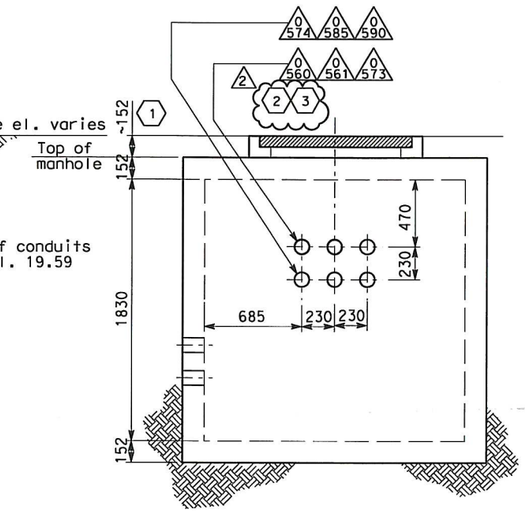

SECTION B-B
SCALE: 1:20

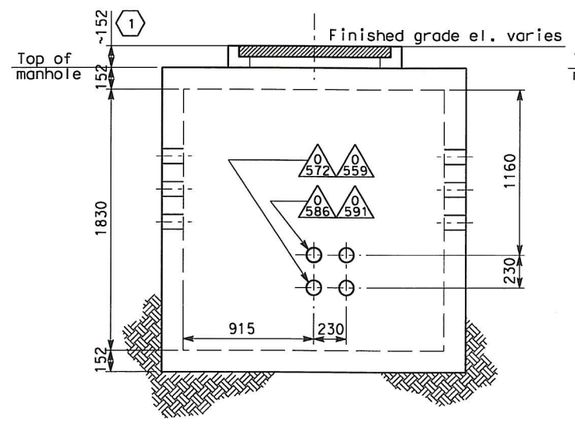

SECTION C-C
SCALE: 1:20

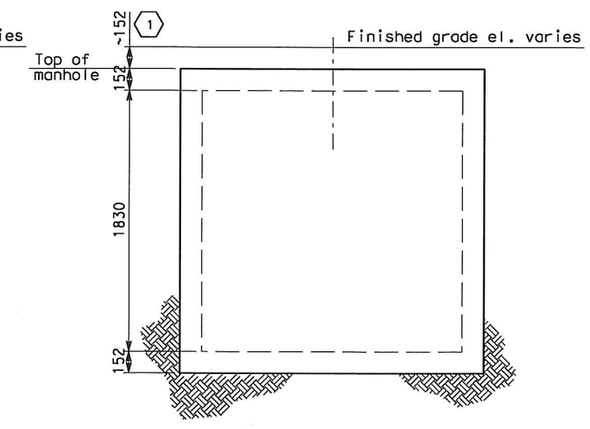

SECTION D-D
SCALE: 1:20

NOTES:

1. References:
   - For duct bank and manhole plan, see sheet E-11.
   - For typical duct bank and manhole details, see sheet E-17.
   - For duct bank sections, see sheet E-19.
   - For circuit and conduit/cable tray schedules, see sheets starting at E-401.
2. For other related work, not shown on this sheet, see Electrical Special Provisions.

SHEET NOTES:

1. Approximate distance of manhole necking or riser is from the finished grade and top of manhole. Maximum length of manhole necking or riser shall be 914 mm.
2. Furnish and Install 4-25.4 mm innerducts inside TOS/COM conduit (0560).
3. Furnish and install BASE fiber optic cable in innerduct. See sheet E-1100.

REGISTERED PROFESSIONAL ENGINEER SYN YEE CHIN No. 18186 Exp. 09/30/2011 ELECTRICAL STATE OF CALIFORNIA

Syn Yee Chin
FOR REVISION ONLY
2

REQUEST FOR INFORMATION NOT ADDRESSED IN THIS CCO REMAIN IN FORCE

MARK	DATE	DESCRIPTIONS	REV	CK	CCO NO.
2	03/01/11	BASE INTEGRATION	RSB	WB	150
1	1/10/06	Revised Manhole detail	CR	JE	11

REVISIONS

CONTRACT CHANGE ORDER NO. 150
SHEET 3 OF 42

DETAILS
UNDERGROUND
MANHOLE PLAN AND SECTIONS
SCALE AS NOTED

E-16

DRAFT 1 (03/01/11)

STATE OF CALIFORNIA - DEPARTMENT OF TRANSPORTATION
Caltrans

DESIGN OVERSIGHT
BEHZAD GOLEMOHAMMADI

CALCULATED/ DESIGNED BY	AB	DATE 11/04	REVISED BY
CHECKED BY	--	--/--	DATE REVISED

LAST REVISION 00-00-00
DATE PLOTTED => 5/24/2011
TIME PLOTTED => 7:46:21 AM

FOR REDUCED PLANS ORIGINAL SCALE IS IN MILLIMETERS 0 20 40 60 80

DGN FILE =>C:\Documents and Settings\Koonc\My Documents\SAS\CCO\CCO-150 Draft 1 Issued for Submittal (03_01_2011)\04-0120F1_0099R
USERNAME =>KoonC
CU 04251
EA 0120F1

DIST	COUNTY	ROUTE	KILOMETER POST TOTAL PROJECT	SHEET No.	TOTAL SHEETS
04	SF	80	13.2/13.9	103 R3	1204

Jens Erlingsson 12/19/02
REGISTERED ELECTRICAL ENGINEER DATE

12-6-04
PLANS APPROVAL DATE

REGISTERED PROFESSIONAL ENGINEER JENS ERLINGSSON No. 8249 Exp. 9/30/06 ELECTRICAL STATE OF CALIFORNIA

PB POWER, Inc.
A Parsons Brinckerhoff Company
303 Second St., Suite 700N
San Francisco, CA 94107-1317

The State of California or its officers or agents shall not be responsible for the accuracy or completeness of electronic copies of this plan sheet.

Caltrans now has a web site! To get to the web site, go to http://www.dot.ca.gov

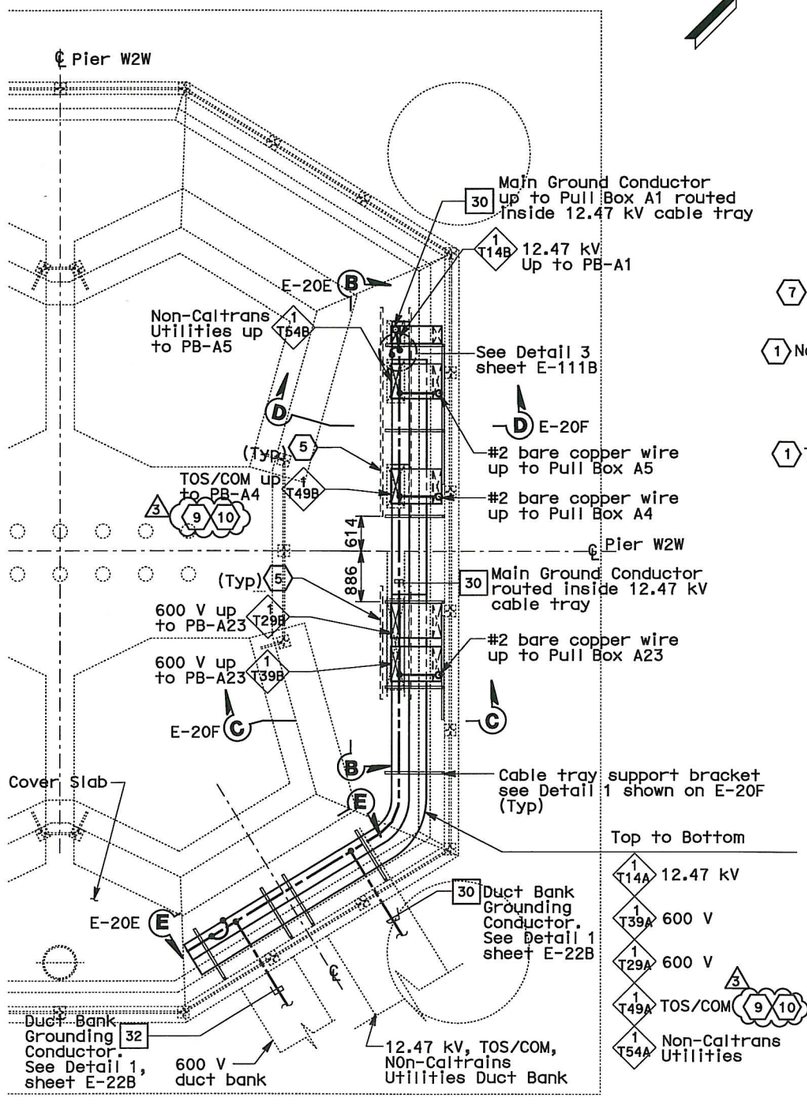

PLAN AT BELOW COVER PIER W2W

SCALE: 1:20

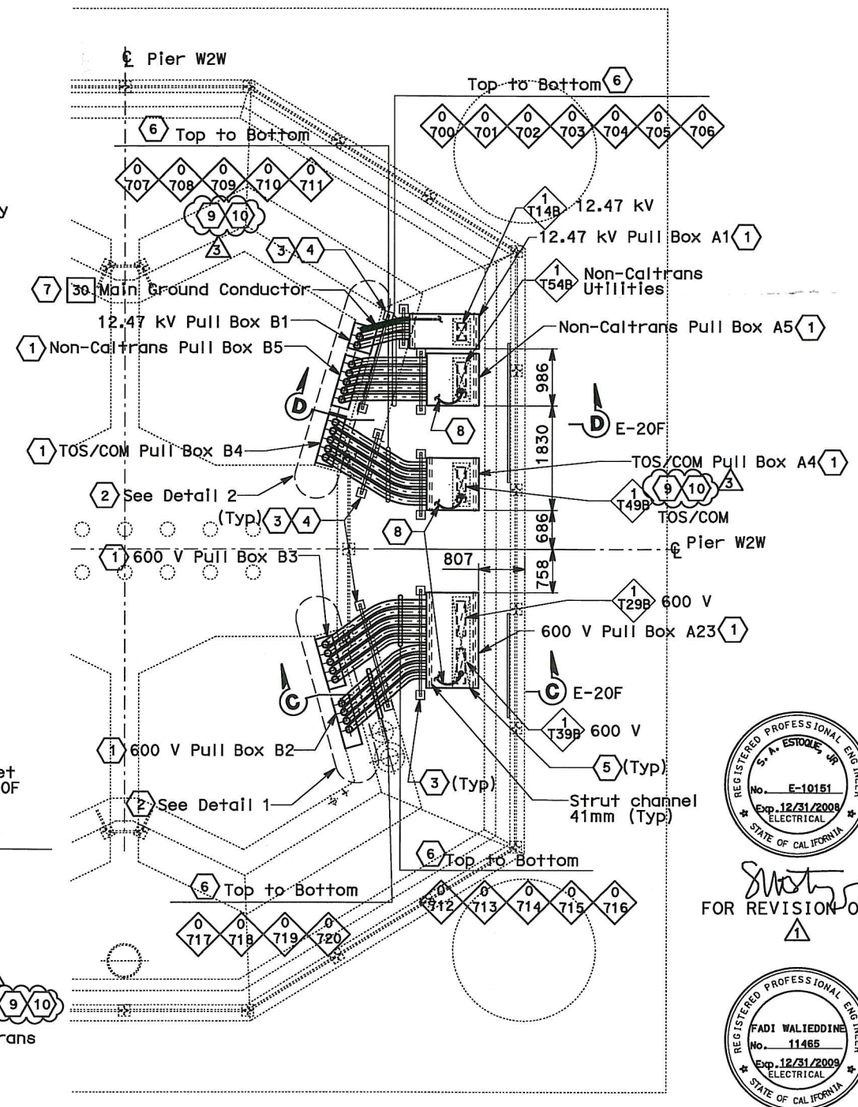

PLAN AT GRADE PIER W2W

SCALE: 1:20

REGISTERED PROFESSIONAL ENGINEER SYN YEE CHIN No. 18186 Exp. 09/30/2011 ELECTRICAL STATE OF CALIFORNIA

Syn Yee Chin
FOR REVISION ONLY
3

REGISTERED PROFESSIONAL ENGINEER S. A. ESTOQUE, JR. No. E-10151 Exp. 12/31/2009 ELECTRICAL STATE OF CALIFORNIA

FOR REVISION ONLY
1

REGISTERED PROFESSIONAL ENGINEER FADI WALIEDDINE No. 11465 Exp. 12/31/2009 ELECTRICAL STATE OF CALIFORNIA

FOR REVISION ONLY
2

NOTES:

1. References:
   - For duct bank and manhole plan, see sheet E-11.
   - For duct bank section, see sheet E-19.
   - For circuit and conduit/cable tray schedules, see sheets starting at E-401.
   - For foundation grounding, see sheet E-22.
   - For grounding interface, see sheet E-18.
   - For SAS Superstructure girder westbound grounding plan, see sheets E-111 and E-18.
   - For duct bank elevations at W2W, see sheet E-23.

SHEET NOTES:

(1) For pull box sizes, opening and type see sheet E-20C.

(2) For Details 1 and 2 see sheet E-20B.

(3) For conduit support details see sheet E-20D.

(4) Do not secure liquidtight metal flexible conduit at this support location.

(5) For embedded strut channel and cable tray opening locations at pier W2 cover slab see E-20E.

(6) Length of flexible conduits shall be provided for seismic movement. The maximum expansion displacement is 400mm.

(7) Route main ground conductor in 53 mm liquidtight flexible metal conduit (LFMC) between pull boxes A1 and B1. For continuation, see sheets E-20B and E-20F.

(8) #2 bare copper wire shall be connected to ground conductor or to the mechanical ground connector inside pull box, see Detail 7, sheet E-111B. For continuation down, see sheet E-20E.

(9) Furnish and install 4-25.4 mm innerducts inside TOS/COM conduit (0709) and 1-25.4 mm innerduct per BASE fiber optic cable in TOS/COM cable tray. (3)

(10) Furnish and install BASE fiber optic cable in innerduct inside TOS/COM conduit and cable tray. See sheet E-1100.

REQUEST FOR INFORMATION NOT ADDRESSED IN THIS CCO REMAIN IN FORCE

MARK	DATE	DESCRIPTIONS	BY	CH'D	CCO#
3	03/01/11	BASE INTEGRATION	RSB	WB	150
2	11/20/09	ELECTRICAL GROUNDING	RR AWG	RG FW	75
1	02/25/08	CABLE TRAY CHANGES	TW	RG SE	42S1

REVISIONS

CONTRACT CHANGE ORDER NO. 150
SHEET 4 OF 42

DETAILS
UNDERGROUND
PIER W2W PLAN AND SECTIONS

SCALE AS NOTED

E-20

THIS PLAN IS ACCURATE FOR ELECTRICAL WORK ONLY.

ALL DIMENSIONS ARE IN MILLIMETERS UNLESS OTHERWISE SHOWN.

FOR REDUCED PLANS ORIGINAL 0 20 40 60 80 DGN FILE =>04-0120f1 0103R03.dgn

DRAFT 1 (03/01/11)

STATE OF CALIFORNIA - DEPARTMENT OF TRANSPORTATION

Caltrans

DESIGN OVERSIGHT: BEHZAD GOLEMOHAMMADI

CALCULATED/DESIGNED BY: IAH — CHECKED BY: AB

DATE 02/07 — REVISED BY — DATE 02/07 — REVISED

LAST REVISION DATE PLOTTED => 25-FEB-2011

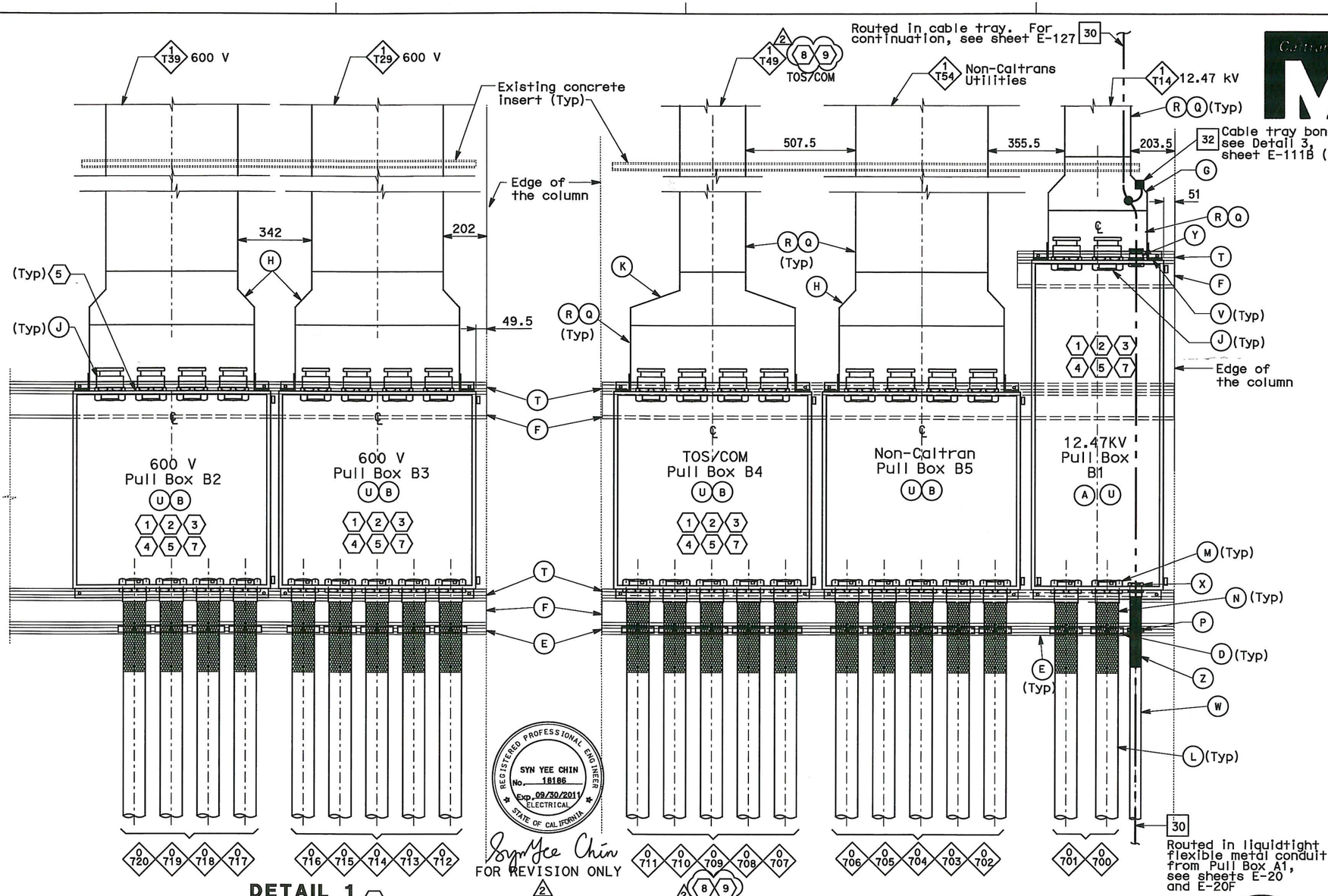

DETAIL 1 6
NO SCALE

DETAIL 2 6
NO SCALE

DIST	COUNTY	ROUTE	KILOMETER POST TOTAL PROJECT	SHEET No	TOTAL SHEETS
04	SF	80	13.2/13.9	103 S2R2	1204

REGISTERED ELECTRICAL ENGINEER 2/22/08 DATE

PLANS APPROVAL DATE

REGISTERED PROFESSIONAL ENGINEER S. A. ESTOQUE, JR. No. E-10151 Exp. 12/31/2009 STATE OF CALIFORNIA

PB AMERICAS, Inc.
A Parsons Brinckerhoff Company
303 Second St., Suite 700N
San Francisco, CA 94107-1317

The State of California or its officers or agents shall not be responsible for the accuracy or completeness of electronic copies of this plan sheet.

Caltrans now has a web site! To get to the web site, go to http://www.dot.ca.gov

Caltrans Metric

MATERIAL LIST

Item No.	Description
A	Pull Box, Nema 4X 1524 mm x 610 mm x 406 mm
B	Pull Box, Nema 4X 914 mm x 914 mm x 305 mm
C	Not used
D	Strut channel conduit clamp for 103 mm
E	Double strut channel 41 mm x 124 mm
F	Channel C130x10
G	Cable tray straight reducer (547 mm to 305 mm)
H	Cable tray straight reducer (762 mm to 610 mm)
J	103 mm conduit hub, 53 mm long nipple and insulated bushing
K	Cable tray straight reducer (762 mm to 305 mm)
L	Liquidtight flexible metal conduit, 103 mm
M	Liquidtight Insulated flexible metal conduit connector with insulated grounding bushing for 103 mm conduit
N	Strain relief grips for flexible conduit, 103 mm
P	Strut channel conduit clamp for 53 mm
Q	Cable tray, ladder type
R	Cable tray peaked cover and cover clamp
T	Strut channel 41 mm x 41 mm
U	Breather and Drain Hole
V	Tray to box connector plates
W	Liquidtight flexible metal conduit, 53 mm
X	Liquidtight Insulated flexible metal conduit connector with insulated grounding bushing for 53 mm conduit
Y	53 mm conduit hub, 53 mm long nipple and insulated bushing
Z	Strain relief grips for flexible conduit, 53 mm

SHEET NOTES:

1. For Pull Boxes location see E-20.
2. For Pull Box sizes and opening see E-20C.
3. For Pull Box mounting and support see E-20A.
4. Contractor shall verify all the dimensions prior to start the work.
5. To prevent moisture and water from entering enclosures, Contractor to provide sealant after all cables are pulled. Conduits and nipples without cables shall be capped for future use.
6. Detail 1 & Detail 2 see sheet E-20.
7. All liquidtight flexible metal conduit (LFMC) shall have #2 AWG bare copper wire inside that bonded to the grounding bushing whether shown on the drawings or not. Bond conduit bushings together and to the metallic enclosures. For similar bonding jumpers, see Details 6 and 7, sheet E-111B.
8. Furnish and install 4-25.4 mm innerducts inside TOS/COM conduit (0709) and 1-25.4 mm innerduct per BASE fiber optic cable in TOS/COM cable tray. 2
9. Furnish and install BASE fiber optic cable in innerduct inside TOS/COM conduit and cable tray. See sheet E-1100.

NOTE:

1. All cable/cables entering the liquidtight conduits from the pull box shall be provided with strain relief cable/cables grips attached from the vertical cable tray rungs.

REGISTERED PROFESSIONAL ENGINEER SYN YEE CHIN No. 18186 Exp. 09/30/2011 ELECTRICAL STATE OF CALIFORNIA

Syn Yee Chin
FOR REVISION ONLY 2

REGISTERED PROFESSIONAL ENGINEER FADI WALIEDDINE No. 11465 Exp. 12/31/2009 ELECTRICAL STATE OF CALIFORNIA

FOR REVISION ONLY 1

REQUEST FOR INFORMATION NOT ADDRESSED IN THIS CCO REMAIN IN FORCE

MARK	DATE	DESCRIPTIONS	BY	CH'D	CCO#
2	03/01/11	BASE INTEGRATION	RSB	WB	150
1	11/20/09	ELECTRICAL GROUNDING	RR AWG	RG FW	75
0	02/25/08	CABLE TRAY CHANGES	TW	RG SE	42S1

REVISIONS

CONTRACT CHANGE ORDER NO. 150
SHEET 5 OF 42

THIS PLAN IS ACCURATE FOR ELECTRICAL WORK ONLY.

ALL DIMENSIONS ARE IN MILLIMETERS UNLESS OTHERWISE SHOWN.

DETAILS
UNDERGROUND
PIER W2W PLANS AND SECTIONS
SCALE AS NOTED

E-20B

DATE	REVISED BY	DATE	REVISED
TW	DATE 7/07	E.JL	7/07

CALCULATED/DESIGNED BY — CHECKED BY

DESIGN OVERSIGHT — BEHZAD GOLEMOHAMMADI

STATE OF CALIFORNIA - DEPARTMENT OF TRANSPORTATION — Caltrans

LAST REVISION | DATE PLOTTED => 28-FEB-2011

FOR REDUCED PLANS ORIGINAL 0 20 40 60 80 | DGN FILE =>04-0120f1 0103S02R02.dgn

DIST	COUNTY	ROUTE	KILOMETER POST TOTAL PROJECT	SHEET No	TOTAL SHEETS
04	SF	80	13.2/13.9	103 S5R2	1204

REGISTERED ELECTRICAL ENGINEER — DATE 2/22/08

PLANS APPROVAL DATE

REGISTERED PROFESSIONAL ENGINEER S. A. ESTOQUE, JR. No. E-10151 Exp. 12/31/2009 ELECTRICAL STATE OF CALIFORNIA

PB AMERICAS, Inc.
A Parsons Brinckerhoff Company
303 Second St., Suite 700N
San Francisco, CA 94107-1317

The State of California or its officers or agents shall not be responsible for the accuracy or completeness of electronic copies of this plan sheet.

Caltrans now has a web site! To get to the web site, go to http://www.dot.ca.gov

Caltrans Metric

REGISTERED PROFESSIONAL ENGINEER FADI WALIEDDINE No. 11465 Exp. 12/31/2009 ELECTRICAL STATE OF CALIFORNIA

FOR REVISION ONLY 1

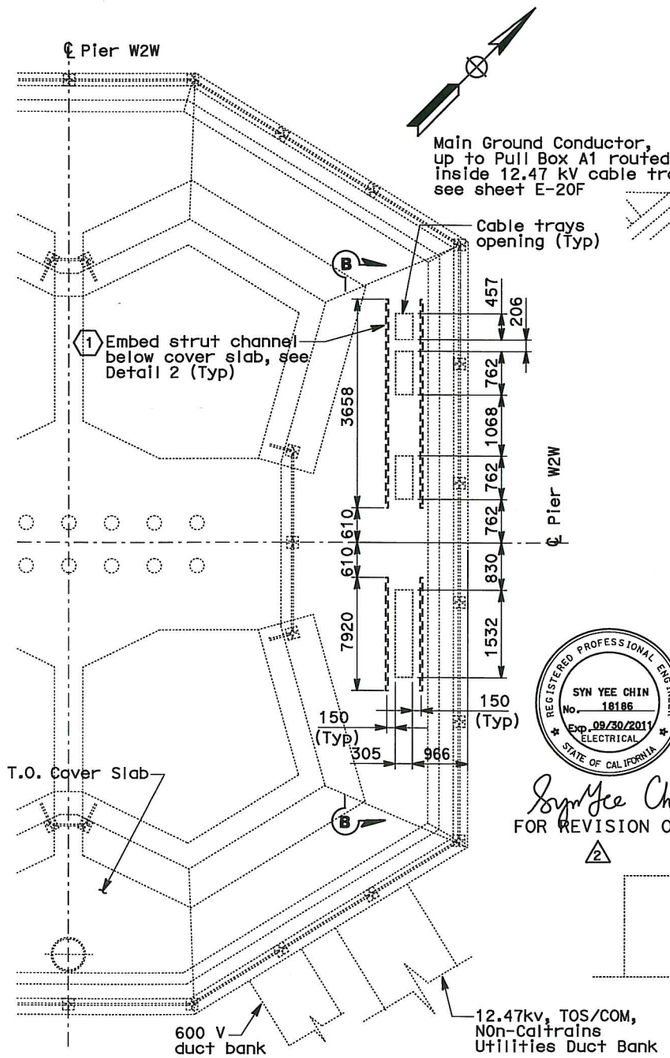

CABLE TRAY OPENING AND CONCRETE INSERT CHANNEL

PLAN AT PIER W2W
SCALE: 1:20

REGISTERED PROFESSIONAL ENGINEER SYN YEE CHIN No. 18186 Exp. 09/30/2011 ELECTRICAL STATE OF CALIFORNIA

Syn Yee Chin
FOR REVISION ONLY 2

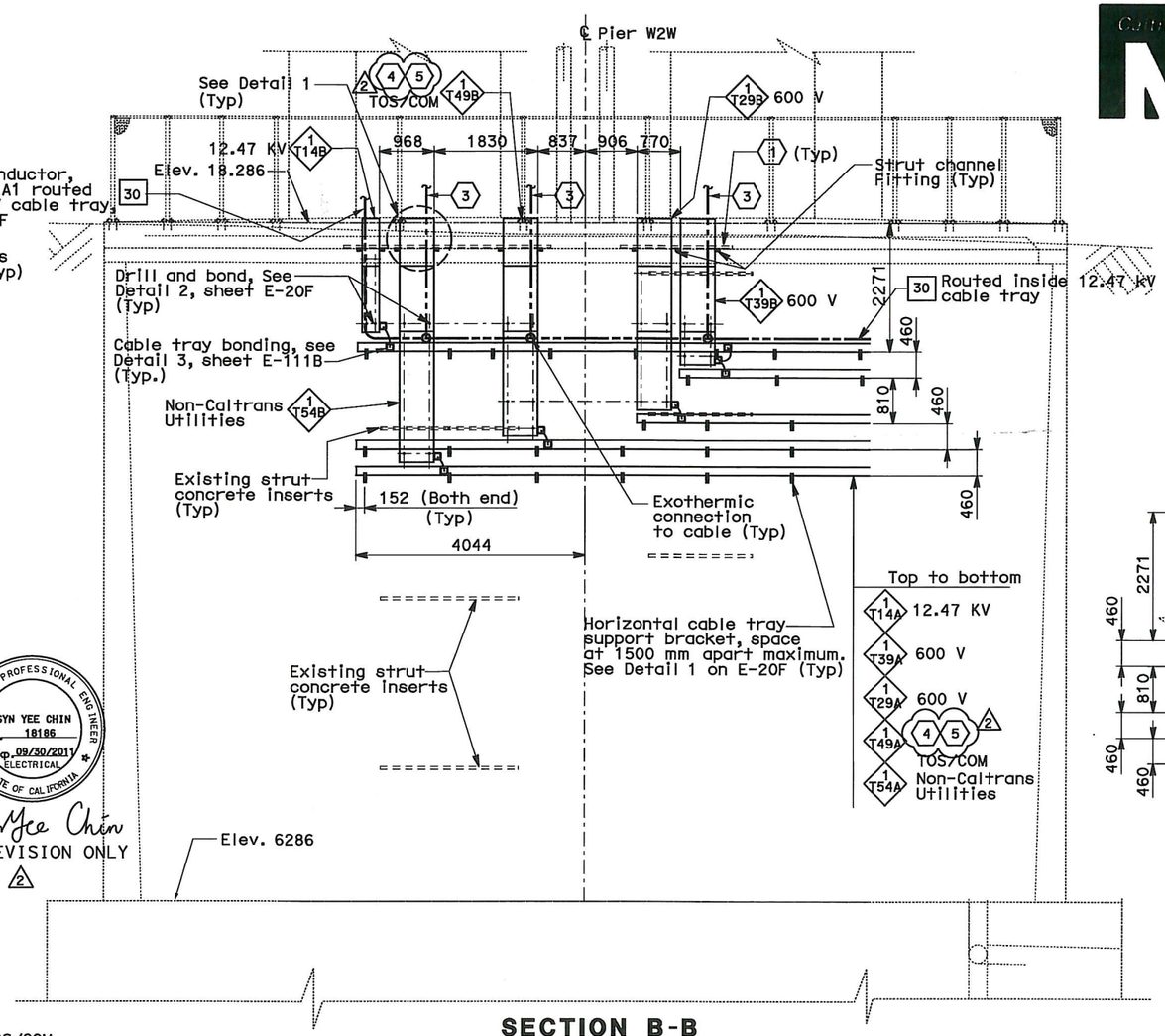

SECTION B-B

SCALE: 1:50

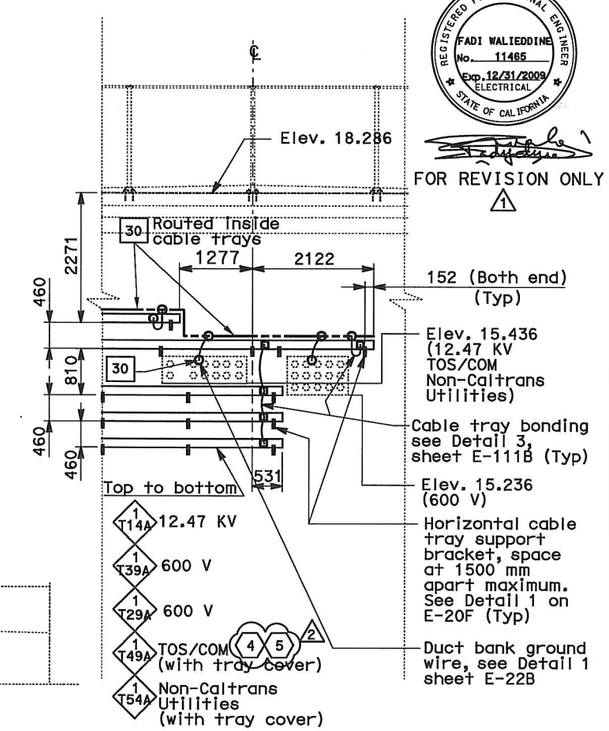

SECTION E-E

SCALE: 1:50

SHEET NOTES:

1. For fill-in material between cable tray and concrete, See Structures.
2. Section E-E see sheet E-20.
3. Route #2 bare copper wire inside cable tray and connect to the ground conductor or to the mechanical ground connector inside respective pull boxes A4, A5 and A23. For continuation, see sheet E-20.
4. Furnish and install 4-25.4 mm innerducts inside TOS/COM conduit (0709) and 1-25.4 mm innerduct per BASE fiber optic cable in TOS/COM cable tray.
5. Furnish and install BASE fiber optic cable in innerduct inside TOS/COM conduit and cable tray. See sheet E-1100.

THIS PLAN IS ACCURATE FOR ELECTRICAL WORK ONLY

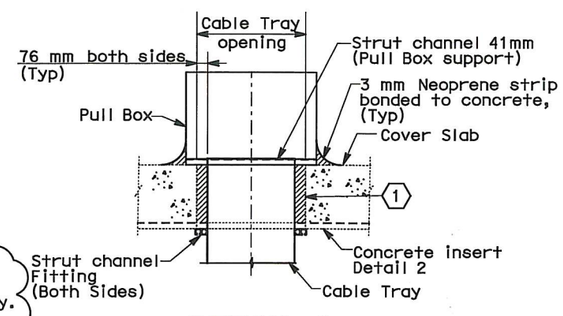

DETAIL 1

SCALE: 1:20

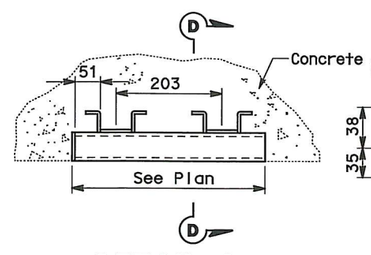

DETAIL 2 CEILING MOUNT

NO SCALE

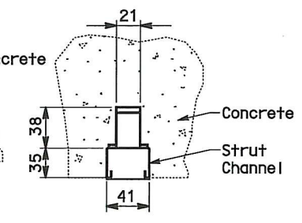

SECTION D-D

NO SCALE

REQUEST FOR INFORMATION NOT ADDRESSED IN THIS CCO REMAIN IN FORCE					
2	03/01/11	BASE INTEGRATION	RSB	WB	150
1	11/20/09	ELECTRICAL GROUNDING	RR AWG	RG FW	75
0	02/25/08	CABLE TRAY CHANGES	TW	RG SE	42S1
MARK	DATE	DESCRIPTIONS	BY	CH'D	CCO#
		REVISIONS			

CONTRACT CHANGE ORDER NO. 150
SHEET 6 OF 42

DETAILS
UNDERGROUND
PIER W2W PLANS AND SECTIONS

SCALE AS NOTED

E-20E

ALL DIMENSIONS ARE IN MILLIMETERS UNLESS OTHERWISE SHOWN.

FOR REDUCED PLANS ORIGINAL 0 20 40 60 80 DGN FILE =>04-0120f1 0103S05R02.dgn

LAST REVISION | DATE PLOTTED => 28-FEB-2011

	DATE	REVISED BY	DATE REVISED
CALCULATED/DESIGNED BY	TW	07/07	
CHECKED BY	EJL	07/07	

DESIGN OVERSIGHT
BEHZAD GOLEMOHAMMADI

STATE OF CALIFORNIA - DEPARTMENT OF TRANSPORTATION
Caltrans

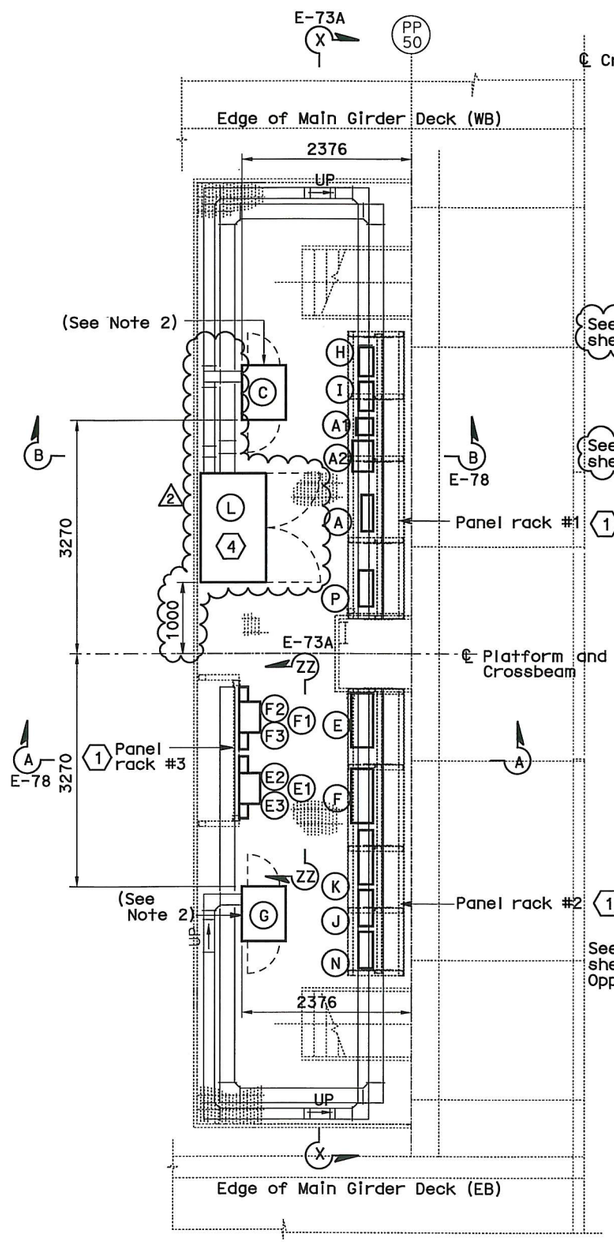

EQUIPMENT ARRANGEMENT PLAN

SCALE 1:40

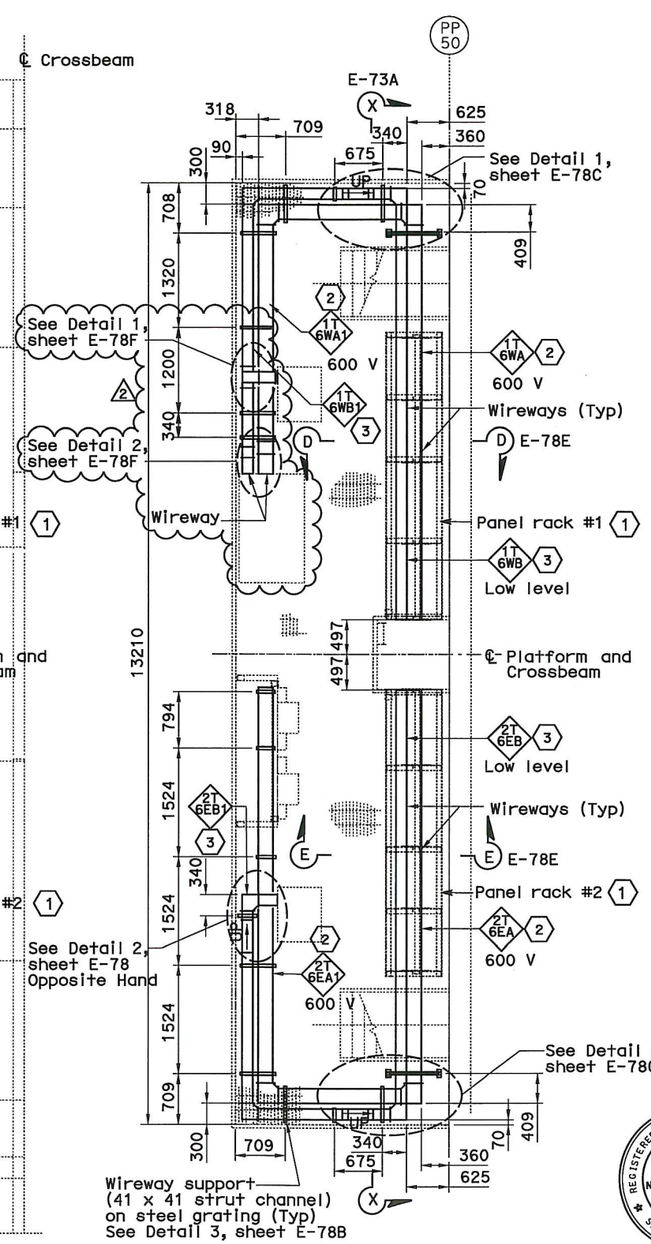

WIREWAY PLAN

SCALE 1:40

EQUIPMENT SCHEDULE:

Equipment for Westbound

- (A) Utility Panel, UP-106, 100A 208/120 V, 3-phase, 4-wire
- (A1) 480 V Breaker for (A2) (Nema 4X) Size: 495 H X 232 W X 124 D
- (A2) 15 kVA Transformer, 3 phase, 60 hertz 480 V-208/120 V, 3 phase (Nema 4X) Size: 375 H X 485 W X 311 D
- (C) Controller Cabinet TOS-6WA Size: 1625 H X 615 W X 768 D
- (I) Navigation Relay Cabinet NAP-6W (PB-6C)
- (P) TOS/COM-6WA Pull Box (PB-2B)

Equipment for Eastbound

- (E) Utility Panel, UP-206, 100A MLO 208/120 V, 3-phase, 4-wire
- (E1) 480 V Breaker for (E2) (Nema 4X) Size: 495 H X 232 W X 124 D
- (E2) 15 kVA Transformer, 3 phase, 60 hertz 480 V-208/120 V, 3 phase (Nema 4X) Size: 375 H X 485 W X 311 D.
- (E3) Enclosed circuit breaker 10 kAIC 240 V 3 phase in NEMA 4X enclosure.
- (F) Lighting Panel LP-221, 100A MLO 208/120 V, 3-phase, 4-wire
- (F1) 480 V Breaker for LP-221 (Nema 4X) Size: 495 H X 232 W X 124 D
- (F2) 15 kVA Transformer, 3 phase, 60 hertz 480 V-208/120 V, 3 phase (Nema 4X) Size: 375 H X 485 W X 311 D
- (F3) Enclosed circuit breaker 10 kAIC 240 V 3 phase in NEMA 4X enclosure.
- (G) Controller Cabinet TOS-6EA Size: 1625 H X 615 W X 768 D
- (H) Navigation Relay Cabinet NAP-6E (PB-6C)
- (N) TOS/COM-6EA Pull Box (PB-2B)

Equipment Common for Westbound/Eastbound

- (J) Telephone Terminal Box #TEL-6 (PB-7C)
- (K) Communication Terminal Box COM-6 (PB-7B)
- (L) BASE Communication Panel, BCP-6, 1830 H x 1526 W x 916 D (Nema 4X) (4) (2)

DIST	COUNTY	ROUTE	KILOMETER POST TOTAL PROJECT	SHEET No	TOTAL SHEETS
04	SF	80	13.2/13.9	136 R2	1204

12/19/02
REGISTERED ELECTRICAL ENGINEER DATE

12-6-04
PLANS APPROVAL DATE

REGISTERED PROFESSIONAL ENGINEER JENS ERLINGSSON No. 8249 Exp. 9/30/06 ELECTRICAL STATE OF CALIFORNIA

PB POWER, Inc.
A Parsons Brinckerhoff Company
303 Second St., Suite 700N
San Francisco, CA 94107-1317

The State of California or its officers or agents shall not be responsible for the accuracy or completeness of electronic copies of this plan sheet.

Caltrans now has a web site! To get to the web site, go to http://www.dot.ca.gov

SHEET NOTES:

(1) For electrical panel support details, see AS-sheets.

(2) 600 V Stainless steel wireway, Nema 4X with cover.

(3) Low level Stainless steel wireway, Nema 4X with cover.

(2) (4) Cabinet shall be made of 5052-H32 aluminum, 3.175 mm thick with natural, powder coats color white to match bridge structure anodized finish.

NOTES:

1. The contractor shall verify the sizes and mounting dimensions of all rack mounted equipment prior to the fabrication of service platform racks. The contractor shall also verify the wireway mounting dimensions and support locations and make adjustment as needed to suit field condition.
2. Contractor to provide cover plate and sealant to all cabinets with open bottom. Cover plate shall be of the same material. See Sheet E-78B for details.
3. References:
   - For platform 6 conduit, lighting and grounding plan, see sheet E-116.
   - For location of platform 6, see sheet E-48.
   - TOS are shown for conduit routing only. For typical details of TOS controller and devices, see sheets E-344 through E-361.
   - For schedule of utility panel UP-106, see sheet E-61.
   - For schedule of utility panel UP-206, see sheet E-152.
   - For schedule of lighting panel LP-221, see sheet E-156.
   - For typical panel arrangement details of SCADA communications terminal box, see sheet E-321.
   - For pull box schedule, see sheet E-83.
   - For circuit and conduit/cable tray schedules, see sheets starting at E-401.
   - For platform elevations, see sheet E-73A.

REGISTERED PROFESSIONAL ENGINEER SYN YEE CHIN No. 18186 Exp. 09/30/2011 ELECTRICAL STATE OF CALIFORNIA

Syn Yee Chin
FOR REVISION ONLY
(2)

REGISTERED PROFESSIONAL ENGINEER FADI WALIEDDINE No. 11465 Exp. 12/31/2009 ELECTRICAL STATE OF CALIFORNIA

FOR REVISION ONLY
(1)

REQUEST FOR INFORMATION NOT ADDRESSED IN THIS CCO REMAIN IN FORCE

MARK	DATE	DESCRIPTIONS	BY	CH'D	CCO#
2	03/01/11	BASE INTEGRATION	RSB	WB	150
1	03/30/09	SERVICE PLATFORM ELECTRICAL CHANGES	RR MP	RG FW	55

REVISIONS

CONTRACT CHANGE ORDER NO. 150
SHEET 7 OF 42

DETAILS
SAS SUPERSTRUCTURE ROADWAY WESTBOUND PLATFORM 6 ARRANGEMENT

SCALE AS NOTED

E-73

THIS PLAN IS ACCURATE FOR ELECTRICAL WORK ONLY.

ALL DIMENSIONS ARE IN MILLIMETERS UNLESS OTHERWISE SHOWN.

FOR REDUCED PLANS ORIGINAL 0 20 40 60 80

DGN FILE =>04-0120f1 0136R02.dgn

DRAFT 1 (03/01/11)

STATE OF CALIFORNIA - DEPARTMENT OF TRANSPORTATION

DESIGN OVERSIGHT: BEHZAD GOLEMOHAMMADI

CALCULATED/DESIGNED BY	DATE	REVISED BY	DATE REVISED
FK	11/02		
CHECKED BY	IAH	11/02	

LAST REVISION | DATE PLOTTED => 25-FEB-2011

DIST	COUNTY	ROUTE	KILOMETER POST TOTAL PROJECT	SHEET No	TOTAL SHEETS
04	SF,Ala	80	12.2/14.3 0.0/4.0	139 S6	1204

Caltrans Metric

Syn Yee Chin 2/25/11
REGISTERED ELECTRICAL ENGINEER DATE

PLANS APPROVAL DATE

REGISTERED PROFESSIONAL ENGINEER SYN YEE CHIN No. 18186 Exp. 09/30/2011 ELECTRICAL STATE OF CALIFORNIA

PB AMERICAS, Inc.
A Parsons Brinckerhoff Company
303 Second St., Suite 700N
San Francisco, CA 94107-1317

The State of California or its officers or agents shall not be responsible for the accuracy or completeness of electronic copies of this plan sheet.

Caltrans now has a web site! To get to the web site, go to http://www.dot.ca.gov

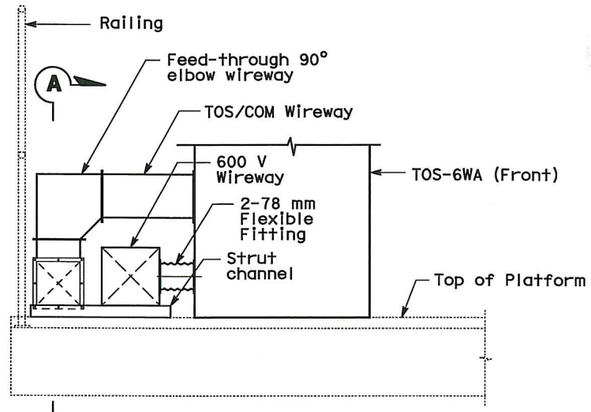

DETAIL 1 (2)

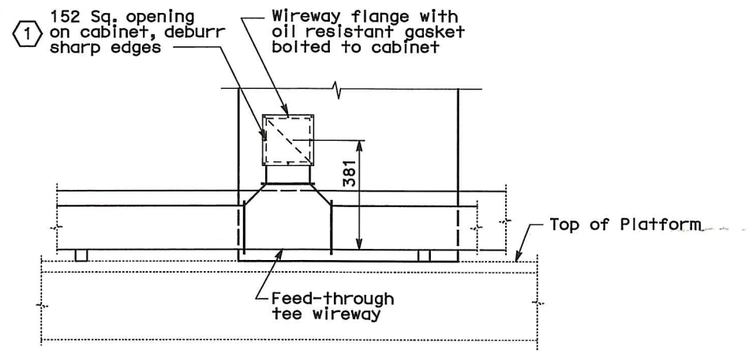

SECTION A-A

SHEET NOTES

(1) Location of opening shall be verified that there is no interference with components inside panel. Adjust location of opening as required.

(2) For plan drawing, see sheets E-73 and E-116.

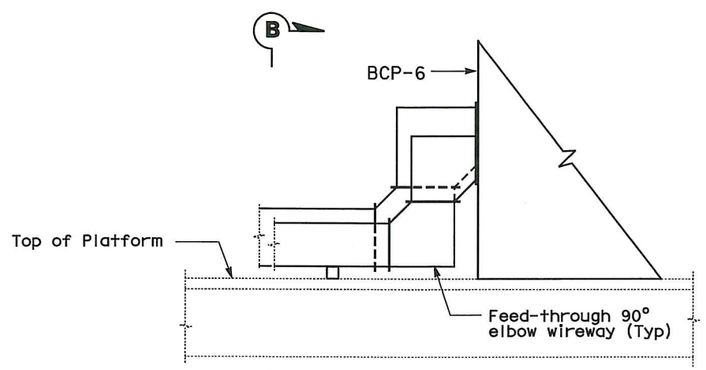

DETAIL 2 (2)

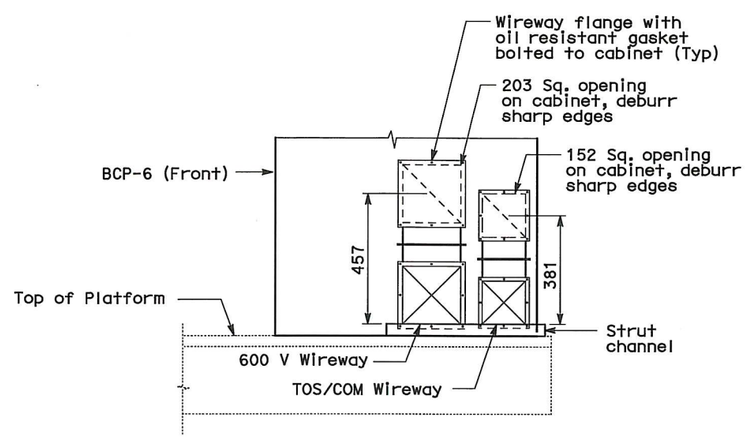

SECTION B-B

REQUEST FOR INFORMATION NOT ADDRESSED IN THIS CCO REMAIN IN FORCE					
0	03/01/11	BASE INTEGRATION	RSB	WB	150
MARK	DATE	DESCRIPTIONS	BY	CH'D	CCO#
		REVISIONS			

CONTRACT CHANGE ORDER NO. 150
SHEET 8 OF 42

DETAILS
SAS SUPERSTRUCTURE ROADWAY WESTBOUND PLATFORM SECTIONS
SCALE AS NOTED

E-78F

DRAFT 1 (03/01/11)
STATE OF CALIFORNIA - DEPARTMENT OF TRANSPORTATION
Caltrans
DESIGN OVERSIGHT
BEHZAD GOLEMOHAMMADI
CALCULATED/DESIGNED BY RSB
CHECKED BY WB
DATE 10/10
REVISED BY
DATE REVISED

THIS PLAN ACCURATE FOR ELECTRICAL WORK ONLY.

ALL DIMENSIONS ARE IN MILLIMETERS UNLESS OTHERWISE SHOWN

FOR REDUCED PLANS ORIGINAL 0 20 40 60 80

DGN FILE =>04-0120f1 0139S06.dgn

LAST REVISION DATE PLOTTED => 25-FEB-2011

DIST	COUNTY	ROUTE	KILOMETER POST TOTAL PROJECT	SHEET No	TOTAL SHEETS
04	SF	80	13.2/13.9	149 R4	1204

REGISTERED ELECTRICAL ENGINEER 12/19/02 DATE

12-6-04
PLANS APPROVAL DATE

REGISTERED PROFESSIONAL ENGINEER JENS ERLINGSSON No. 8249 Exp. 9/30/06 ELECTRICAL STATE OF CALIFORNIA

PB POWER, Inc.
A Parsons Brinckerhoff Company
303 Second St., Suite 700N
San Francisco, CA 94107-1317

The State of California or its officers or agents shall not be responsible for the accuracy or completeness of electronic copies of this plan sheet.

Caltrans now has a web site! To get to the web site, go to http://www.dot.ca.gov

Caltrans Metric

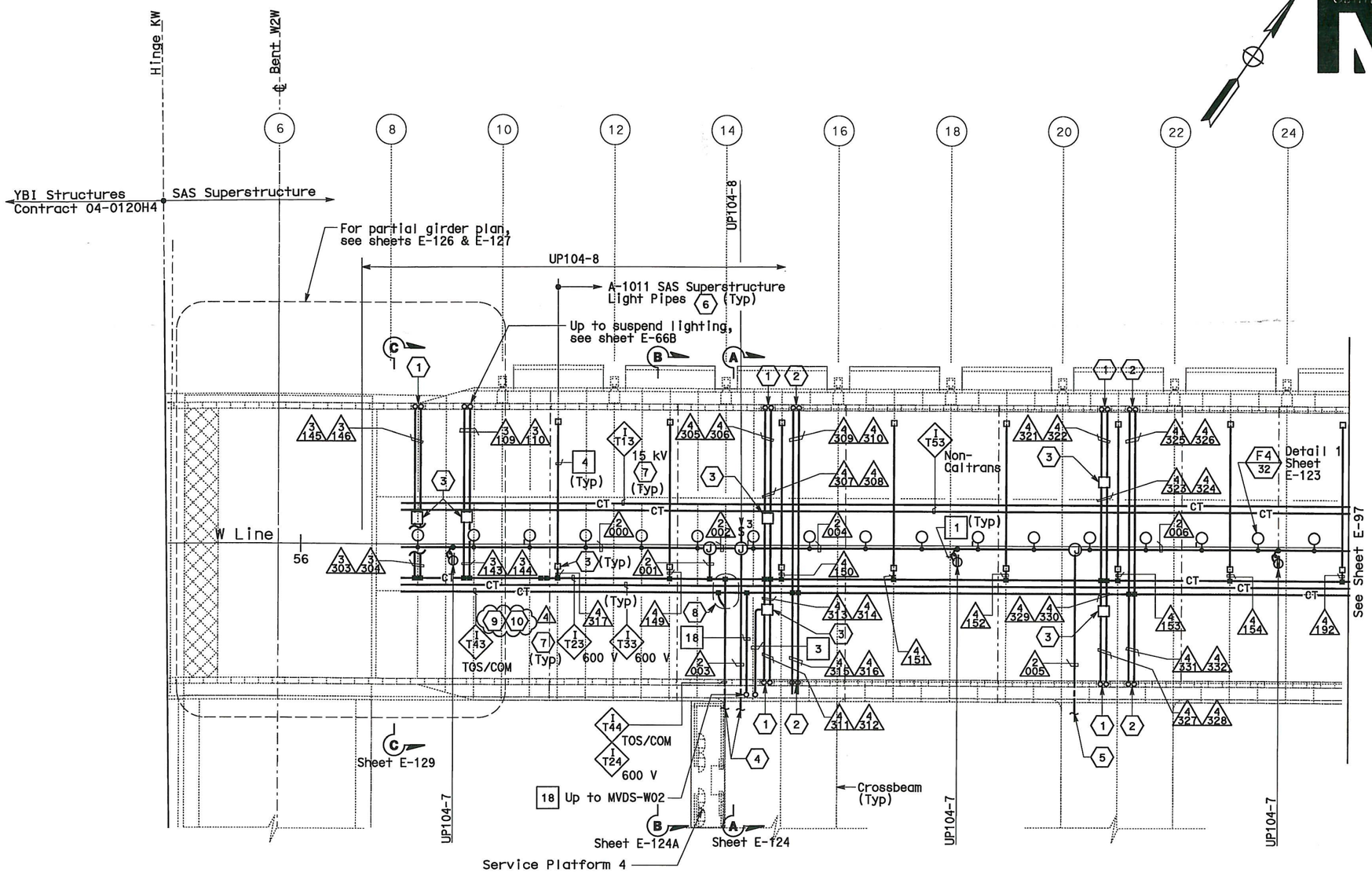

SAS SUPERSTRUCTURE - CONDUIT AND CABLE TRAY PLAN

SHEET NOTES:

1. Conduit up to PB-LTG located in barrier, see sheet E-46.
2. Conduit up to PB-COM located in barrier, see sheet E-46.
3. PB-2A locate on top of floor.
4. For cable tray run and lighting inside crossbeam, see sheet E-114.
5. For lighting inside crossbeam, see sheet E-119.
6. PB-2L with circuit for future light pipes. See sheet E-121 for installation details and E-130 for lighting schedule.
7. For cable tray & ground bar support, refer to sheet E-125.
8. For fiber splice tray detail, refer to sheet E-356.
9. Furnish and install 1-25.4 mm innerduct per BASE fiber optic cable in TOS/COM cable tray. (4)
10. Furnish and install BASE fiber optic cable in innerduct. See sheet E-1100.

NOTES:

1. References:
   - TOS equipment is shown for conduit routing only. For typical details of TOS controller and devices, see sheets E-344 through E-357.
   - For types of pull boxes, splice boxes and enclosures, see sheet E-83.
   - For bridge grounding plan, see sheet E-111.
   - For circuit and conduit/cable tray schedules, see sheets starting at E-401.
2. For other work related to Hinge KW and items not shown on this sheet, see Electrical Special Provisions.
3. The girder lighting fixtures are shown diagrammatically. Contractor shall install fixtures at railing posts with a maximum of 8000 mm between fixtures. For types and typical lighting fixture installation details, see sheet E-123.
4. The cable trays are shown diagrammatically. For typical girder cable tray plans and sections, see sheets E-124 and E-125.

REGISTERED PROFESSIONAL ENGINEER SYN YEE CHIN No. 18186 Exp. 09/30/2011 ELECTRICAL STATE OF CALIFORNIA
Syn Yee Chin
FOR REVISION ONLY (4)

REGISTERED PROFESSIONAL ENGINEER FADI WALIEDDINE No. 11465 Exp. 12/31/2009 ELECTRICAL STATE OF CALIFORNIA
FOR REVISION ONLY (2)(3)

REGISTERED PROFESSIONAL ENGINEER MAXWELL FUMIO TAKATA No. E 8651 Exp. 9/30/2010 ELECTRICAL STATE OF CALIFORNIA
FOR REVISION ONLY (1)

REQUEST FOR INFORMATION NOT ADDRESSED IN THIS CCO REMAIN IN FORCE

MARK	DATE	DESCRIPTIONS	BY	CH'D	CCO#
		REVISIONS			
4	03/01/11	BASE INTEGRATION	RSB	WB	150
3	06/25/09	WEST END BARRIER CONDUIT	RG	FW	44S1
2	02/25/08	CABLE TRAY CHANGES	RG	FW	42S1
1	02/19/08	ELECTRICAL MODIFICATIONS	MP EL	RR	42

CONTRACT CHANGE ORDER NO. 150
SHEET 9 OF 42

THIS PLAN IS ACCURATE FOR ELECTRICAL WORK ONLY.

ALL DIMENSIONS ARE IN MILLIMETERS UNLESS OTHERWISE SHOWN.

SAS SUPERSTRUCTURE GIRDER WESTBOUND
LIGHTING AND ELECTRICAL SYSTEMS
SCALE 1:200

E-96

DRAFT 1 (03/01/11)
STATE OF CALIFORNIA - DEPARTMENT OF TRANSPORTATION
Caltrans

DESIGN OVERSIGHT: BEHZAD GOLEMOHAMMADI
CALCULATED/DESIGNED BY: FK — DATE 8/02 — REVISED BY
CHECKED BY: IAH — 8/02 — DATE REVISED

FOR REDUCED PLANS ORIGINAL 0 20 40 60 80 — DGN FILE =>04-0120f1 0149R04.dgn

LAST REVISION — DATE PLOTTED => 25-FEB-2011

DIST	COUNTY	ROUTE	KILOMETER POST TOTAL PROJECT	SHEET No	TOTAL SHEETS
04	SF	80	13.2/13.9	150 R1	1204

Metric

12/19/02
REGISTERED ELECTRICAL ENGINEER DATE

12-6-04
PLANS APPROVAL DATE

REGISTERED PROFESSIONAL ENGINEER JENS ERLINGSSON No. 8249 Exp. 9/30/06 ELECTRICAL STATE OF CALIFORNIA

PB POWER, Inc.
A Parsons Brinckerhoff Company
303 Second St., Suite 700N
San Francisco, CA 94107-1317

The State of California or its officers or agents shall not be responsible for the accuracy or completeness of electronic copies of this plan sheet.

Caltrans now has a web site! To get to the web site, go to http://www.dot.ca.gov

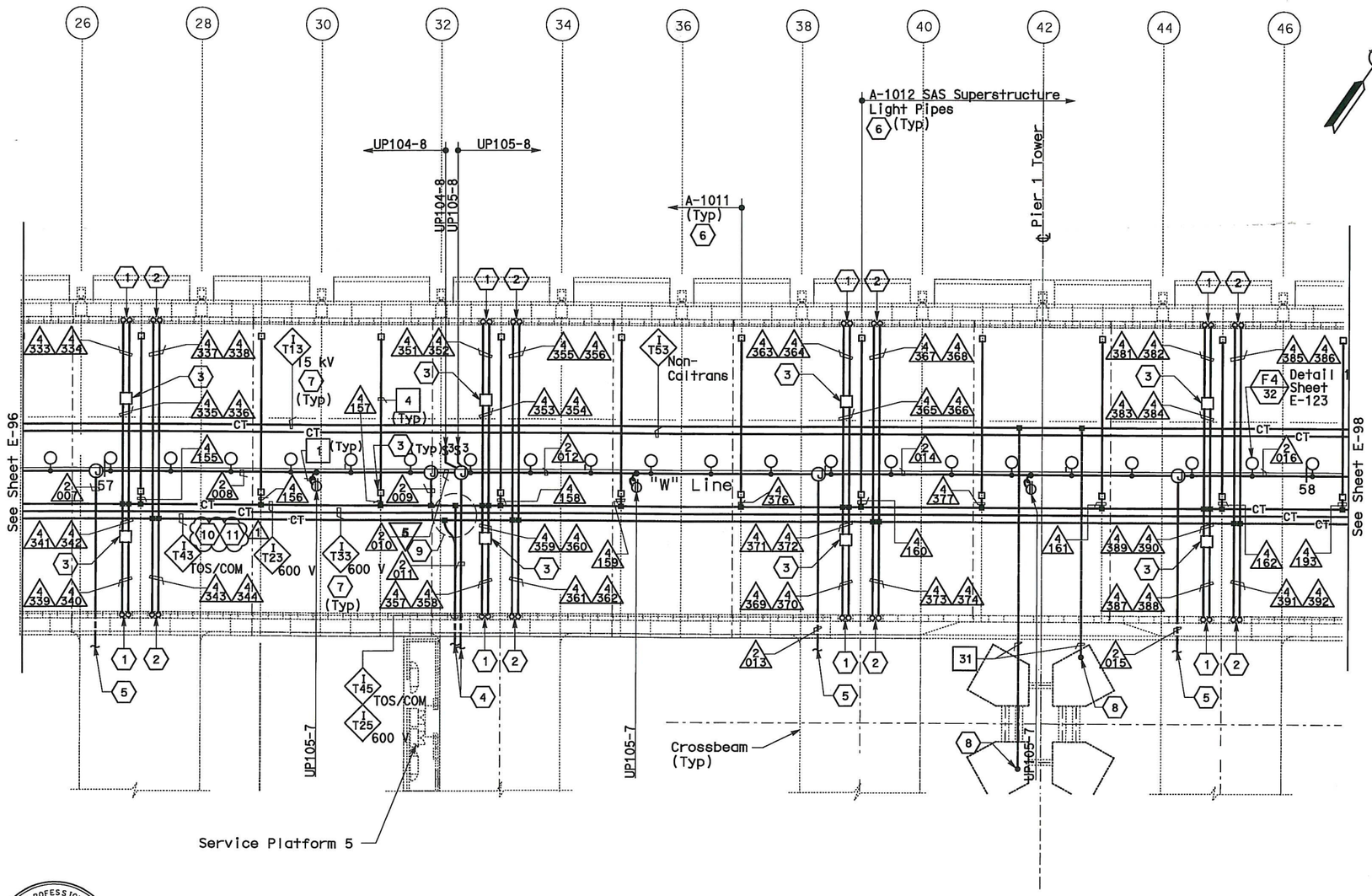

SHEET NOTES:

1. Conduit up to PB-LTG located in barrier, see sheet E-47.
2. Conduit up to PB-COM located in barrier, see sheet E-47.
3. PB-2A locate on top of floor.
4. For cable tray run and lighting inside crossbeam, see sheet E-115.
5. For lighting inside crossbeam, see sheet E-119.
6. PB-2L with circuit for future light pipes. See sheet E-121 for installation details and E-130 for lighting schedule.
7. For cable tray & ground bar support, refer to sheet E-125.
8. 250 kcmil copper grounding conductor exothermically welded to 500 kcmil system grounding conductor and run down to tower footer and exothermically welded to rebar system. For grounding interface, see sheet E-111.
9. For fiber splice tray detail, refer to sheet E-355.
10. Furnish and install 1-25.4 mm innerduct per BASE fiber optic cable in TOS/COM cable tray.
11. Furnish and install BASE fiber optic cable in innerduct. See sheet E-1100.

NOTES:

1. References:
   - TOS equipment is shown for conduit routing only. For typical details of TOS controller and devices, see sheets E-344 through E-357.
   - For types of pull boxes, splice boxes and enclosures, see sheet E-83.
   - For bridge grounding plan, see sheet E-111.
   - For circuit and conduit/cable tray schedules, see sheets starting at E-401.
2. For other related work not shown on this sheet, see Electrical Special Provisions.
3. The girder lighting fixtures are shown diagrammatically. Contractor shall install fixtures at railing posts with a maximum of 8000 mm between fixtures. For types and typical lighting fixture installation details, see sheet E-123.
4. The cable trays are shown diagrammatically. For typical girder cable tray plans and sections, see sheets E-124 and E-125.

REGISTERED PROFESSIONAL ENGINEER SYN YEE CHIN No. 18186 Exp. 09/30/2011 ELECTRICAL STATE OF CALIFORNIA

Syn Yee Chin
FOR REVISION ONLY
1

SAS SUPERSTRUCTURE - CONDUIT AND CABLE TRAY PLAN

REQUEST FOR INFORMATION NOT ADDRESSED IN THIS CCO REMAIN IN FORCE

MARK	DATE	DESCRIPTIONS	BY	CH'D	CCO#
1	03/01/11	BASE INTEGRATION	RSB	WB	150

REVISIONS

CONTRACT CHANGE ORDER NO. 150
SHEET 10 OF 42

THIS PLAN IS ACCURATE FOR ELECTRICAL WORK ONLY.

SAS SUPERSTRUCTURE GIRDER WESTBOUND
LIGHTING AND ELECTRICAL SYSTEMS

SCALE 1:200

ALL DIMENSIONS ARE IN MILLIMETERS UNLESS OTHERWISE SHOWN.

E-97

DATE	REVISED BY
8/02	DATE REVISED

CALCULATED/DESIGNED BY	FK
CHECKED BY	IAH

DESIGN OVERSIGHT
BEHZAD GOLEMOHAMMADI

STATE OF CALIFORNIA - DEPARTMENT OF TRANSPORTATION
Caltrans

DRAFT 1 (03/01/11)

LAST REVISION | DATE PLOTTED => 25-FEB-2011

FOR REDUCED PLANS ORIGINAL 0 20 40 60 80 | DGN FILE =>04-0120f1 0150R01.dgn

DIST	COUNTY	ROUTE	KILOMETER POST TOTAL PROJECT	SHEET No	TOTAL SHEETS
04	SF	80	13.2/13.9	151 R1	1204

REGISTERED ELECTRICAL ENGINEER 12/19/02 DATE

12-6-04
PLANS APPROVAL DATE

REGISTERED PROFESSIONAL ENGINEER JENS ERLINGSSON No. 8249 Exp. 9/30/06 ELECTRICAL STATE OF CALIFORNIA

PB POWER, Inc.
A Parsons Brinckerhoff Company
303 Second St., Suite 700N
San Francisco, CA 94107-1317

The State of California or its officers or agents shall not be responsible for the accuracy or completeness of electronic copies of this plan sheet.

Caltrans now has a web site! To get to the web site, go to http://www.dot.ca.gov

Caltrans Metric

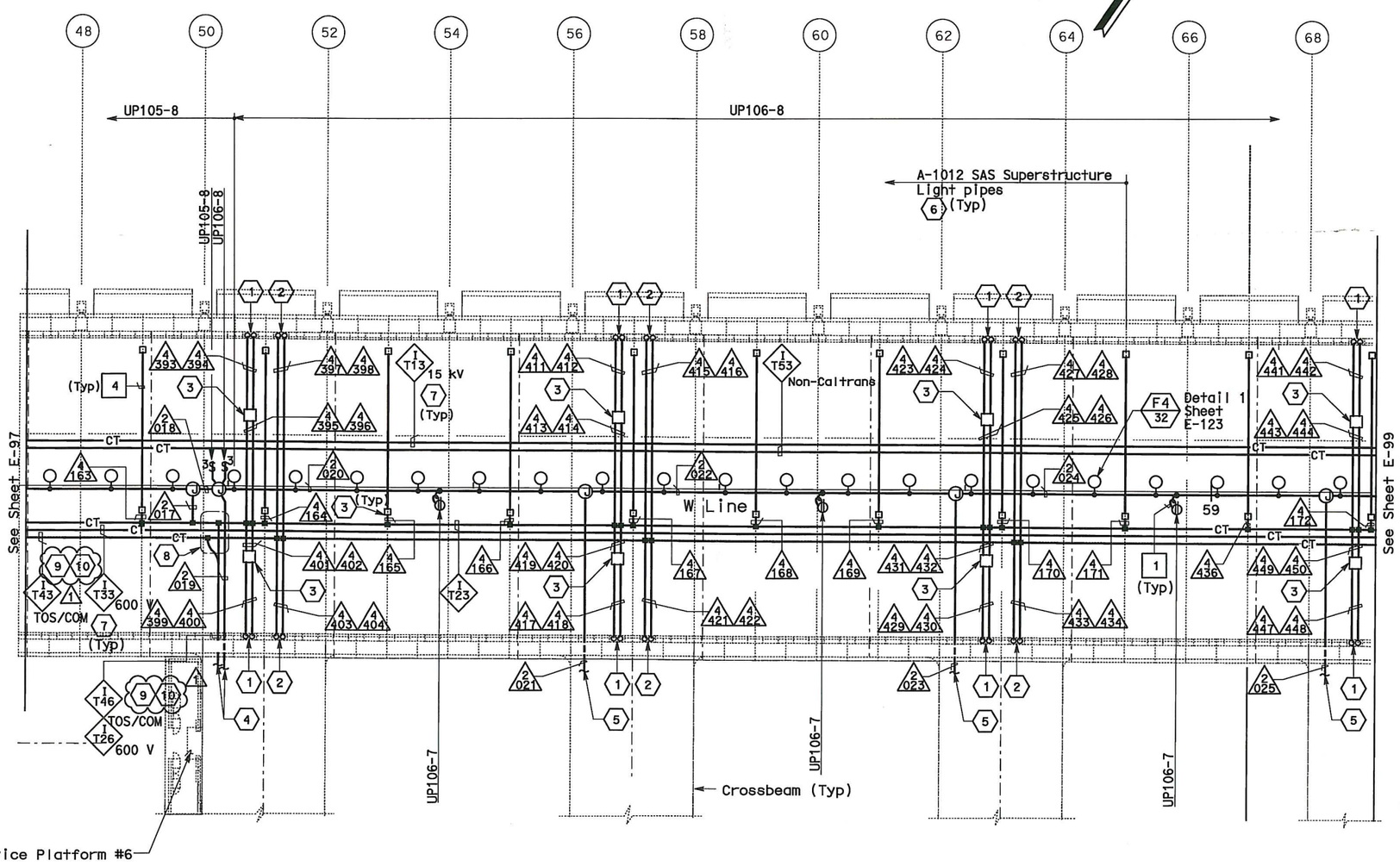

SHEET NOTES:

1. Conduit up to PB-LTG located in barrier, see sheet E-48.
2. Conduit up to PB-COM located in barrier, see sheet E-48.
3. PB-2A, locate on top of floor.
4. For cable tray run and lighting inside crossbeam, see sheet E-116.
5. For lighting inside crossbeam, see sheet E-119.
6. PB-2L with circuit for future light pipes. See sheet E-121 for installation details and E-130 for lighting schedule.
7. For cable tray & ground bar support, refer to sheet E-125.
8. For fiber splice tray detail, refer to sheet E-355.
9. Furnish and install 1-25.4 mm innerduct per BASE fiber optic cable in TOS/COM cable tray.
10. Furnish and install BASE fiber optic cable in innerduct. See sheet E-1100.

NOTES:

1. References:
   - TOS equipment is shown for conduit routing only. For typical details of TOS controller and devices, see sheets E-344 through E-357.
   - For types of pull boxes, splice boxes and enclosures, see sheet E-83.
   - For bridge grounding plan, see sheet E-111.
   - For circuit and conduit/cable tray schedules, see sheets starting at E-401.
2. For other related work not shown on this sheet, see Electrical Special Provisions.
3. The girder lighting fixtures are shown diagrammatically. Contractor shall install fixtures at railing posts with a maximum of 8000 mm between fixtures. For types and typical lighting fixture installation details, see sheet E-123.
4. The cable trays are shown diagrammatically. For typical girder cable tray plans and sections, see sheets E-124 and E-125.

REGISTERED PROFESSIONAL ENGINEER SYN YEE CHIN No. 18186 Exp. 09/30/2011 ELECTRICAL STATE OF CALIFORNIA

Syn Yee Chin
FOR REVISION ONLY
1

SAS SUPERSTRUCTURE - CONDUIT AND CABLE TRAY PLAN

REQUEST FOR INFORMATION NOT ADDRESSED IN THIS CCO REMAIN IN FORCE

MARK	DATE	DESCRIPTIONS REVISIONS	BY	CH'D	CCO#
1	03/01/11	BASE INTEGRATION	RSB	WB	150

CONTRACT CHANGE ORDER NO. 150
SHEET 11 OF 42

SAS SUPERSTRUCTURE GIRDER WESTBOUND
LIGHTING AND ELECTRICAL SYSTEMS
SCALE 1:200

THIS PLAN IS ACCURATE FOR ELECTRICAL WORK ONLY.

ALL DIMENSIONS ARE IN MILLIMETERS UNLESS OTHERWISE SHOWN.

E-98

DRAFT 1 (03/01/11)
STATE OF CALIFORNIA - DEPARTMENT OF TRANSPORTATION
Caltrans

DESIGN OVERSIGHT: BEHZAD GOLEMOHAMMADI
CALCULATED/DESIGNED BY: FK
CHECKED BY: IAH
DATE REVISED: 8/02
REVISED BY: 8/02

FOR REDUCED PLANS ORIGINAL 0 20 40 60 80
DGN FILE =>04-0120f1 0151R01.dgn
LAST REVISION DATE PLOTTED => 25-FEB-2011

DIST	COUNTY	ROUTE	KILOMETER POST TOTAL PROJECT	SHEET No	TOTAL SHEETS
04	SF	80	13.2/13.9	152 R2	1204

REGISTERED ELECTRICAL ENGINEER 12/19/02 DATE

12-6-04
PLANS APPROVAL DATE

REGISTERED PROFESSIONAL ENGINEER JENS ERLINGSSON No. 8249 Exp. 9/30/06 ELECTRICAL STATE OF CALIFORNIA

PB POWER, Inc.
A Parsons Brinckerhoff Company
303 Second St., Suite 700N
San Francisco, CA 94107-1317

The State of California or its officers or agents shall not be responsible for the accuracy or completeness of electronic copies of this plan sheet.

Caltrans now has a web site! To get to the web site, go to http://www.dot.ca.gov

Metric

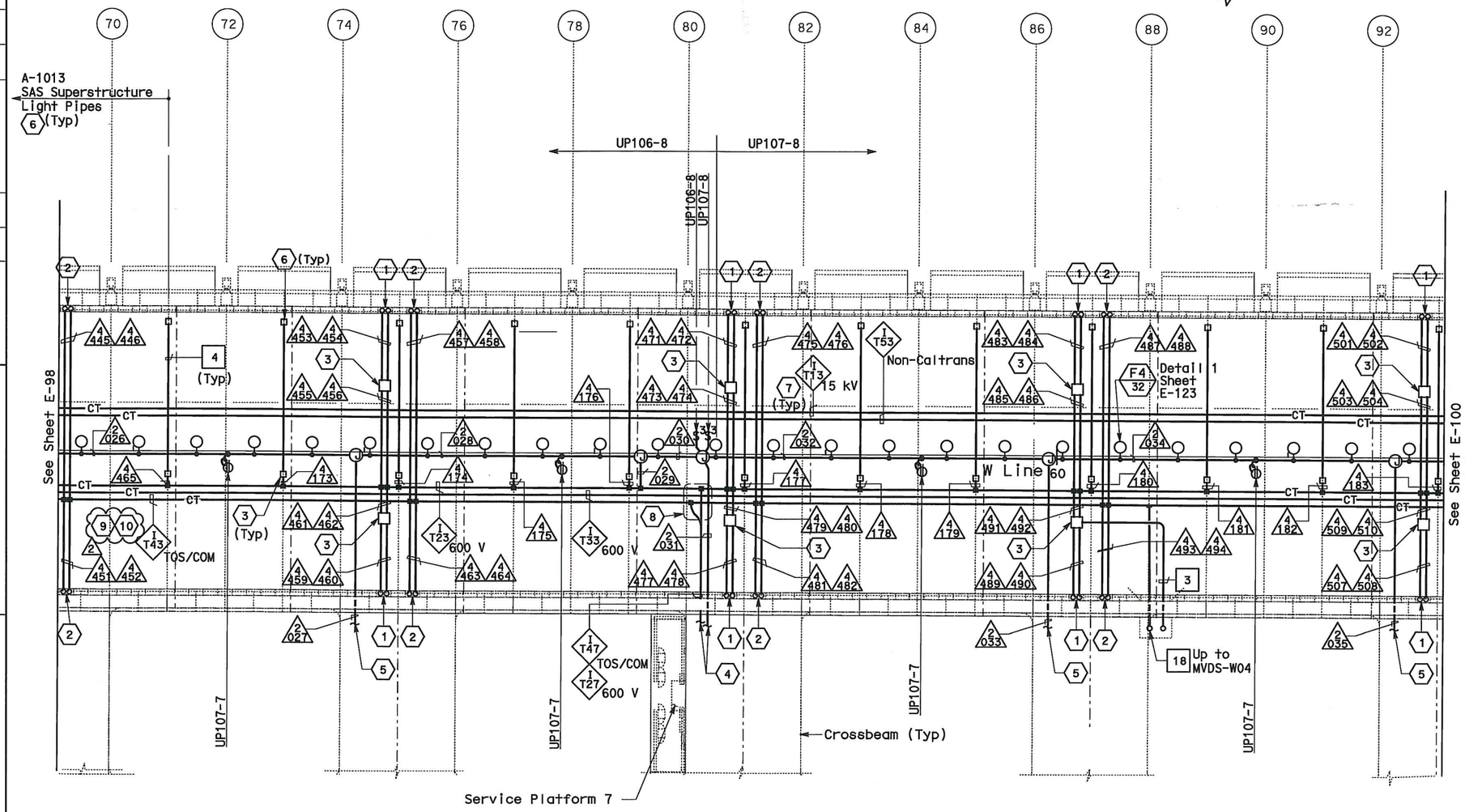

SAS SUPERSTRUCTURE - CONDUIT AND CABLE TRAY PLAN

SHEET NOTES:

1. Conduit up to PB-LTG located in barrier, see sheet E-49.
2. Conduit up to PB-COM located in barrier, see sheet E-49.
3. PB-2A, locate on top of floor.
4. For cable tray run and lighting inside crossbeam, see sheet E-117.
5. For lighting inside crossbeam, see sheet E-119.
6. PB-2L with circuit for future light pipes. See sheet E-121 for installation details and E-130 for lighting schedule.
7. For cable tray and ground bar support, refer to sheet E-125.
8. For fiber splice tray detail, refer to sheet E-356.
9. Furnish and install 1-25.4 mm innerduct per BASE fiber optic cable in TOS/COM cable tray.
10. Furnish and install BASE fiber optic cable in innerduct. See sheet E-1100.

2

NOTES:

1. References:
   - TOS equipment is shown for conduit routing only. For typical details of TOS controller and devices, see sheets E-344 through E-357.
   - For types of pull boxes, splice boxes and enclosures, see sheet E-83.
   - For bridge grounding plan, see sheet E-111.
   - For circuit and conduit/cable tray schedules, see sheets starting at E-401.
2. For other related work not shown on this sheet, see Electrical Special Provisions.
3. The girder lighting fixtures are shown diagrammatically.Contractor shall install fixtures at railing posts with a maximum of 8000 mm between fixtures. For types and typical lighting fixture installation details, see sheet E-123.
4. The cable trays are shown diagrammatically. For typical girder cable tray plans and sections, see sheets E-124 and E-125.

REGISTERED PROFESSIONAL ENGINEER MANUEL FUMIO TAKAKI No. E 8651 Exp. 9/30/2008 ELECTRICAL STATE OF CALIFORNIA

FOR REVISION ONLY
1

REGISTERED PROFESSIONAL ENGINEER SYN YEE CHIN No. 18186 Exp. 09/30/2011 ELECTRICAL STATE OF CALIFORNIA

FOR REVISION ONLY
2

THIS PLAN IS ACCURATE FOR ELECTRICAL WORK ONLY.

REQUEST FOR INFORMATION NOT ADDRESSED IN THIS CCO REMAIN IN FORCE

MARK	DATE	DESCRIPTIONS	BY	CH'D	CCO#
2	03/01/11	BASE INTEGRATION	RSB	WB	150
1	02/19/08	ELECTRICAL MODIFICATIONS	MP EL	RR	42

REVISIONS

CONTRACT CHANGE ORDER NO. 150
SHEET 12 OF 42

SAS SUPERSTRUCTURE GIRDER WESTBOUND
LIGHTING AND ELECTRICAL SYSTEMS
SCALE 1:200

ALL DIMENSIONS ARE IN MILLIMETERS UNLESS OTHERWISE SHOWN.

E-99

	DATE	REVISED BY	DATE REVISED
CALCULATED/DESIGNED BY	FK	DATE 8/02	REVISED BY
CHECKED BY	IAH	8/02	DATE REVISED

DESIGN OVERSIGHT
BEHZAD GOLEMOHAMMADI

STATE OF CALIFORNIA - DEPARTMENT OF TRANSPORTATION
Caltrans

DRAFT 1 (03/01/11)

LAST REVISION DATE PLOTTED => 25-FEB-2011

FOR REDUCED PLANS ORIGINAL 0 20 40 60 80 DGN FILE =>04-0120f1 0152R02.dgn

DIST	COUNTY	ROUTE	KILOMETER POST TOTAL PROJECT	SHEET No	TOTAL SHEETS
04	SF	80	13.2/13.9	153 R2	1204

Jens Erlingsson 12/19/02
REGISTERED ELECTRICAL ENGINEER DATE

12-6-04
PLANS APPROVAL DATE

REGISTERED PROFESSIONAL ENGINEER JENS ERLINGSSON No. 8249 Exp. 9/30/06 ELECTRICAL STATE OF CALIFORNIA

PB POWER, Inc.
A Parsons Brinckerhoff Company
303 Second St., Suite 700N
San Francisco, CA 94107-1317

The State of California or its officers or agents shall not be responsible for the accuracy or completeness of electronic copies of this plan sheet.

Caltrans now has a web site! To get to the web site, go to http://www.dot.ca.gov

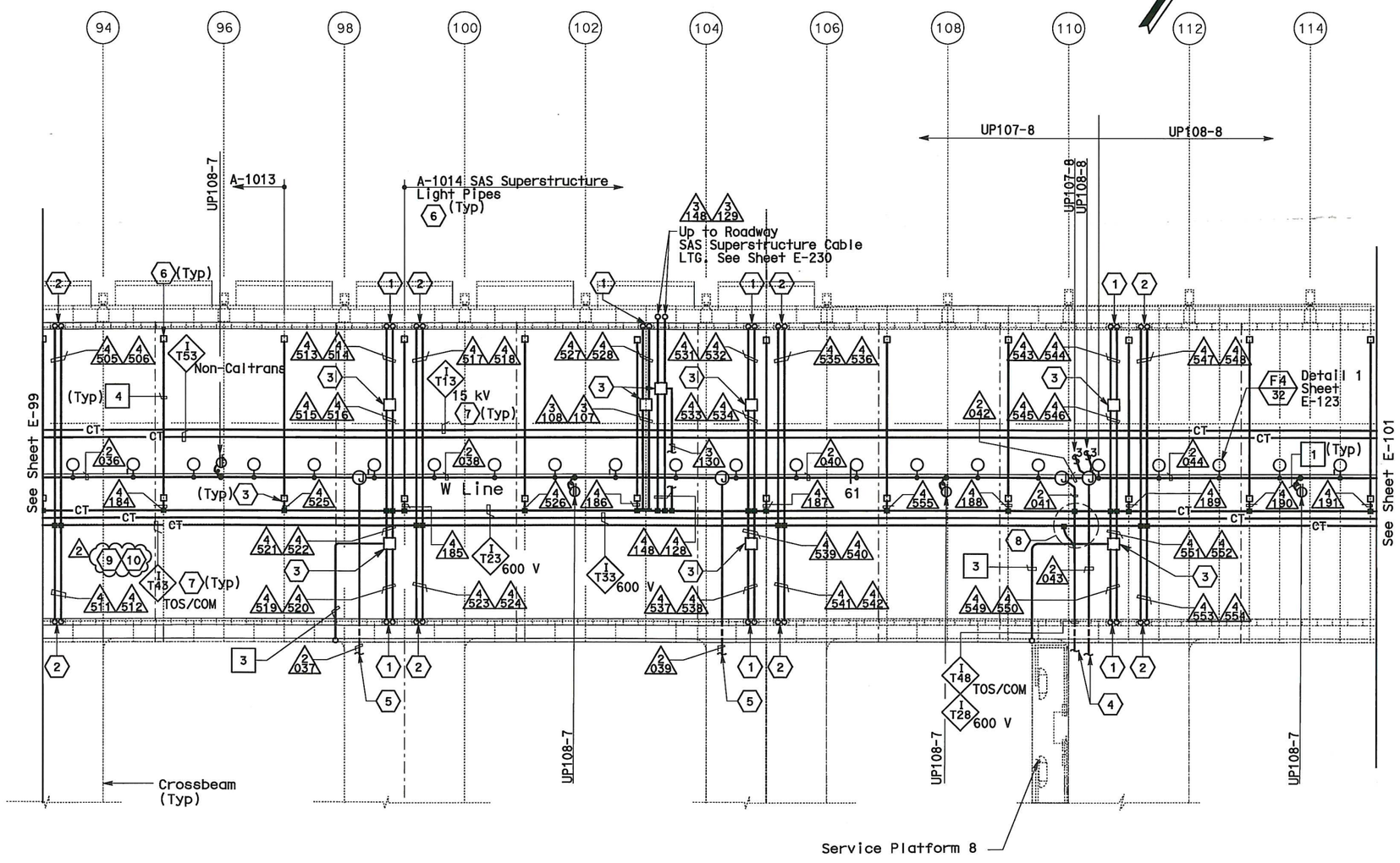

SHEET NOTES:

1. Conduit up to PB-LTG located in barrier, see sheet E-50.
2. Conduit up to PB-COM located in barrier, see sheet E-50.
3. PB-2A, locate on top of floor.
4. For cable tray run and lighting inside crossbeam, see sheet E-118.
5. For lighting inside crossbeam, see sheet E-119.
6. PB-2L with circuit for future light pipes. See sheet E-121 for installation details and E-130 for lighting schedule.
7. For cable tray and ground bar support, refer to sheet E-125.
8. For fiber splice tray detail, refer to sheet E-355.
9. Furnish and install 1-25.4 mm innerduct per BASE fiber optic cable in TOS/COM cable tray.
10. Furnish and install BASE fiber optic cable in innerduct. See sheet E-1100.

NOTES:

1. References:
   - TOS equipment is shown for conduit routing only. For typical details of TOS controller and devices, see sheets E-344 through E-357.
   - For types of pull boxes, splice boxes and enclosures, see sheet E-83.
   - For bridge grounding plan, see sheet E-111.
   - For circuit and conduit/cable tray schedules, see sheets starting at E-401.
2. For other related work not shown on this sheet, see Electrical Special Provisions.
3. The girder lighting fixtures are shown diagrammatically. Contractor shall install fixtures at railing posts with a maximum of 8000 mm between fixtures. For types and typical lighting fixture installation details, see sheet E-123.
4. The cable trays are shown diagrammatically. For typical girder cable tray plans and sections, see sheets E-124 and E-125.

SAS SUPERSTRUCTURE - CONDUIT AND CABLE TRAY PLAN

REGISTERED PROFESSIONAL ENGINEER MAXWELL FUMIO TAKAKI No. E 8651 Exp. 9/30/2008 ELECTRICAL STATE OF CALIFORNIA

FOR REVISION ONLY 1

REGISTERED PROFESSIONAL ENGINEER SYN YEE CHIN No. 18186 Exp. 09/30/2011 ELECTRICAL STATE OF CALIFORNIA

FOR REVISION ONLY 2

THIS PLAN IS ACCURATE FOR ELECTRICAL WORK ONLY.

REQUEST FOR INFORMATION NOT ADDRESSED IN THIS CCO REMAIN IN FORCE

MARK	DATE	DESCRIPTIONS	BY	CH'D	CCO#
2	03/01/11	BASE INTEGRATION	RSB	WB	150
1	02/19/08	ELECTRICAL MODIFICATIONS	MP EL	RR	42

REVISIONS

CONTRACT CHANGE ORDER NO. 150
SHEET 13 OF 42

ALL DIMENSIONS ARE IN MILLIMETERS UNLESS OTHERWISE SHOWN.

SAS SUPERSTRUCTURE GIRDER WESTBOUND
LIGHTING AND ELECTRICAL SYSTEMS
SCALE 1:200

E-100

DRAFT 1 (03/01/11)
STATE OF CALIFORNIA - DEPARTMENT OF TRANSPORTATION
Caltrans

DESIGN OVERSIGHT: BEHZAD GOLEMOHAMMADI
CALCULATED/DESIGNED BY: FK | DATE 8/02 | REVISED BY
CHECKED BY: IAH | 8/02 | DATE REVISED

FOR REDUCED PLANS ORIGINAL 0 20 40 60 80
DGN FILE =>04-0120f1 0153R02.dgn
LAST REVISION | DATE PLOTTED => 25-FEB-2011

DIST	COUNTY	ROUTE	KILOMETER POST TOTAL PROJECT	SHEET No	TOTAL SHEETS
04	SF	80	13.2/13.9	154 R4	1204

Caltrans Metric

REGISTERED ELECTRICAL ENGINEER 12/19/02 DATE

12-6-04
PLANS APPROVAL DATE

REGISTERED PROFESSIONAL ENGINEER JENS ERLINGSSON No. 8249 Exp. 9/30/06 ELECTRICAL STATE OF CALIFORNIA

PB POWER, Inc.
A Parsons Brinckerhoff Company
303 Second St., Suite 700N
San Francisco, CA 94107-1317

The State of California or its officers or agents shall not be responsible for the accuracy or completeness of electronic copies of this plan sheet.

Caltrans now has a web site! To get to the web site, go to http://www.dot.ca.gov

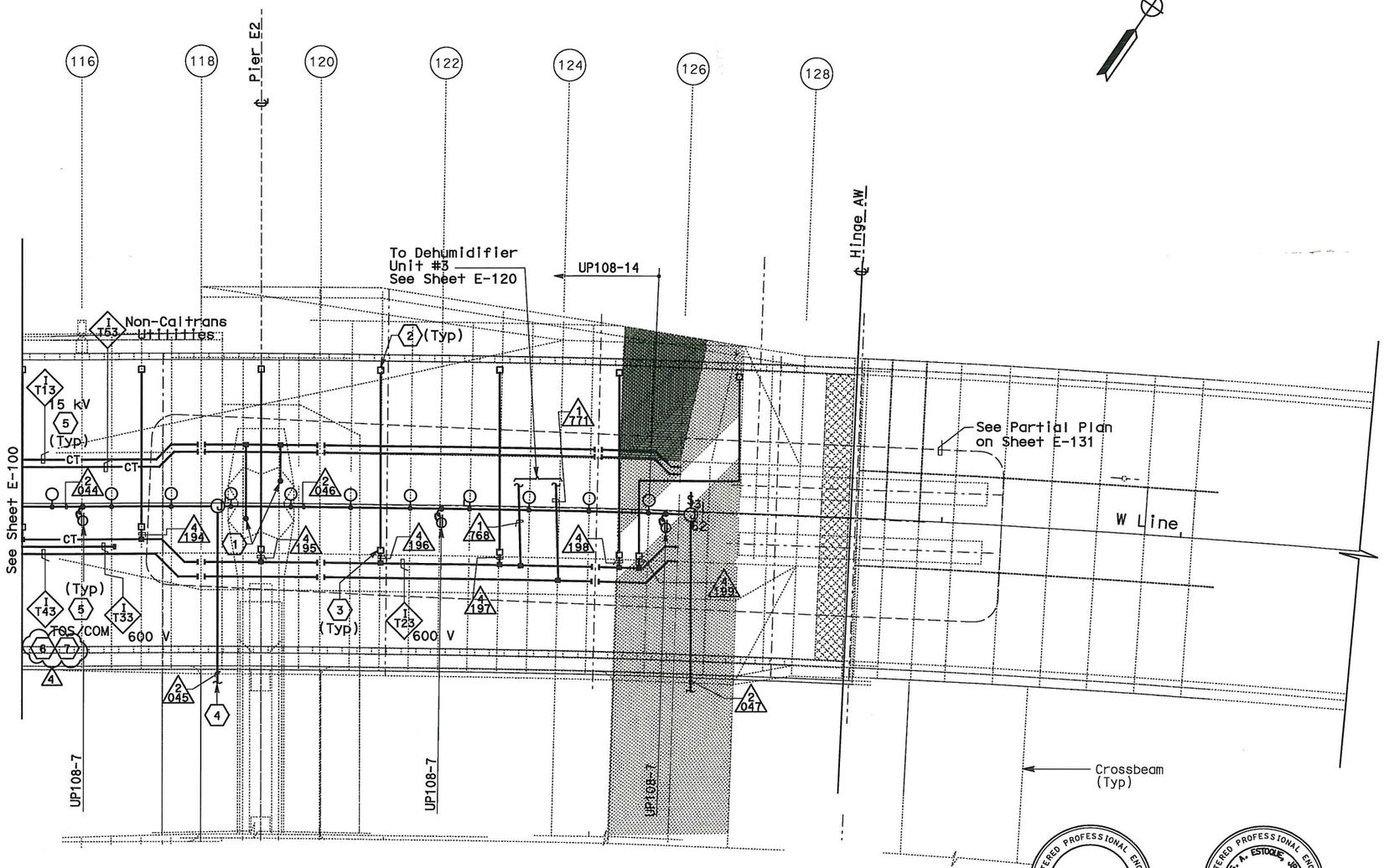

SAS SUPERSTRUCTURE - CONDUIT AND CABLE TRAY PLAN

REGISTERED PROFESSIONAL ENGINEER SYN YEE CHIN No. 18186 Exp. 09/30/2011 ELECTRICAL STATE OF CALIFORNIA

Syn Yee Chin
FOR REVISION ONLY 3 4

REGISTERED PROFESSIONAL ENGINEER S. A. ESTOQUE No. E-10151 Exp. 12/31/2008 ELECTRICAL STATE OF CALIFORNIA

FOR REVISION ONLY 1 2

SAS SUPERSTRUCTURE GIRDER WESTBOUND
LIGHTING AND ELECTRICAL SYSTEMS

SCALE 1:200

SHEET NOTES:

1. 250 kcmil bare copper grounding conductor exothermically welded to 500 kcmil system ground conductor. See E2/T1 structures EA-0120E1 for limit of work.
2. PB-2L with circuit for future light pipes.
3. PB-2A, locate on top of floor.
4. For lighting inside crossbeam, see sheet E-119.
5. For cable tray & grounding installation, refer to sheet E-125 and sheet E-111B.
6. Furnish and install 1-25.4 mm innerduct per BASE fiber optic cable in TOS/COM cable tray. (4)
7. Furnish and install BASE fiber optic cable in innerduct. See sheet E-1100.

NOTES:

1. References:
   - TOS equipment is shown for conduit routing only. For typical details of TOS controller and devices, see sheets E-344 through E-361.
   - For types of pull boxes, splice boxes and enclosures, see sheet E-83.
   - For bridge grounding plan, see sheet E-111.
   - For circuit and conduit/cable tray schedules, see sheets starting at E-401.
2. For other work related to Hinge AW and items not shown on this sheet, see Electrical Special Provisions.
3. The girder lighting fixtures are shown diagrammatically.Contractor shall install fixtures at railing posts with a maximum of 8000 mm between fixtures. For types and typical lighting fixture installation details, see sheet E-123.
4. The cable trays are shown diagrammatically. For typical girder cable tray plans and sections, see sheets E-124 and E-125.

REQUEST FOR INFORMATION NOT ADDRESSED IN THIS CCO REMAIN IN FORCE

MARK	DATE	DESCRIPTIONS	BY	CH'D	CCO#
4	03/01/11	BASE INTEGRATION	RSB	WB	150
3	03/26/10	DEHUMIDIFIER SCADA INTERFACE	RR	RG FW	130
2	02/25/08	CABLE TRAY CHANGES	MP	RG SE	42S1
1	02/19/08	ELECTRICAL MODIFICATIONS	MP EL	RR	42

REVISIONS

CONTRACT CHANGE ORDER NO. 150
SHEET 14 OF 42

THIS PLAN IS ACCURATE FOR ELECTRICAL WORK ONLY.

E-101

DRAFT 1 (03/01/11)

STATE OF CALIFORNIA - DEPARTMENT OF TRANSPORTATION

Caltrans

DESIGN OVERSIGHT BEHZAD GOLEMOHAMMADI

CALCULATED/DESIGNED BY FK | CHECKED BY IAH | DATE | REVISED BY | DATE REVISED

FOR REDUCED PLANS ORIGINAL 0 20 40 60 80

DGN FILE =>04-0120f1 0154R04.dgn

LAST REVISION | DATE PLOTTED => 25-FEB-2011

DIST	COUNTY	ROUTE	KILOMETER POST TOTAL PROJECT	SHEET No	TOTAL SHEETS
04	SF	80	13.2/13.9	155 R2	1204

REGISTERED ELECTRICAL ENGINEER 2/6/04 DATE

12-6-04
PLANS APPROVAL DATE

REGISTERED PROFESSIONAL ENGINEER JENS ERLINGSSON No. 8249 Exp. 9/30/06 ELECTRICAL STATE OF CALIFORNIA

PB POWER, Inc.
A Parsons Brinckerhoff Company
303 Second St., Suite 700N
San Francisco, CA 94107-1317

The State of California or its officers or agents shall not be responsible for the accuracy or completeness of electronic copies of this plan sheet.

Caltrans now has a web site! To get to the web site, go to http://www.dot.ca.gov

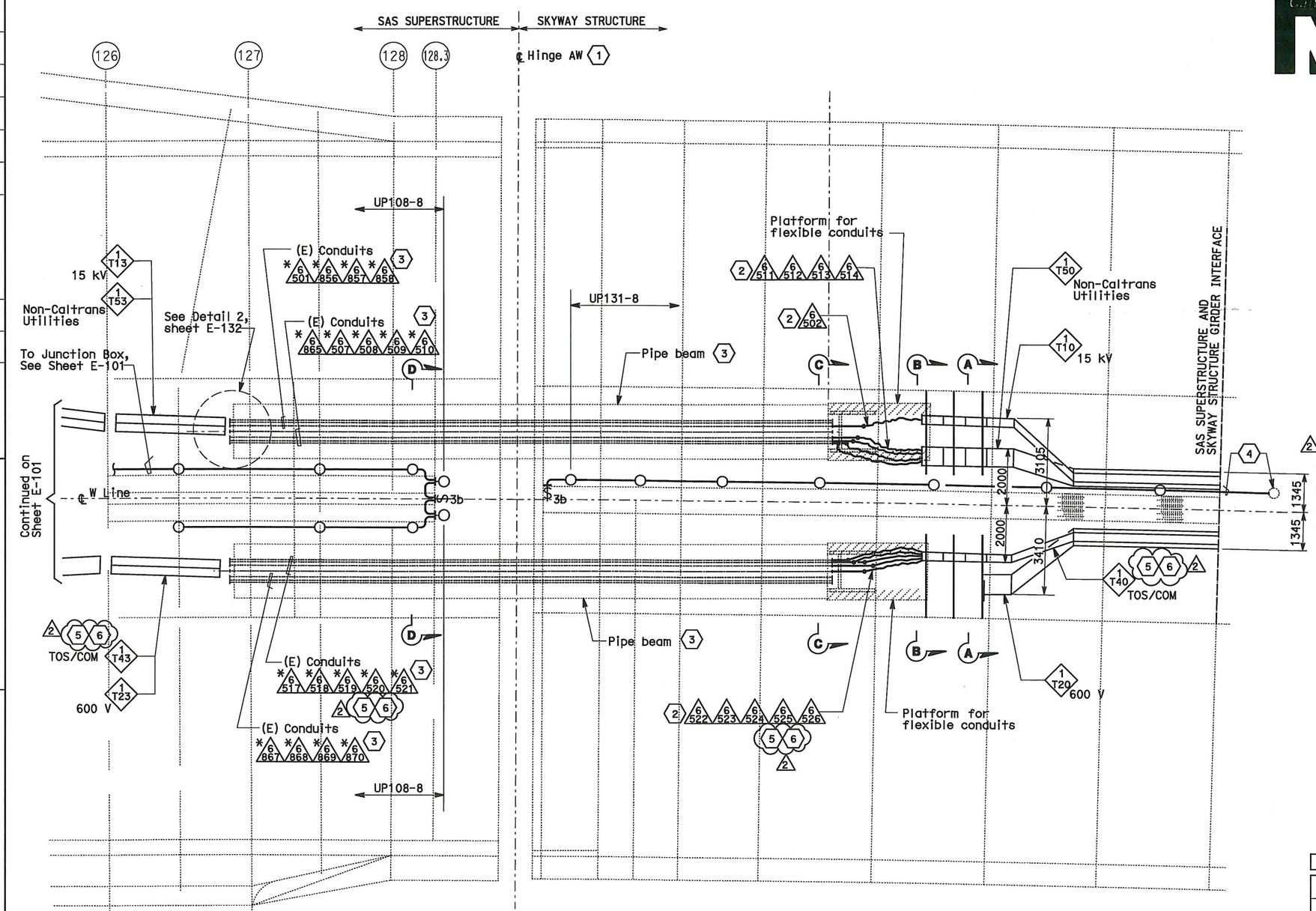

SHEET NOTES:

1. Hinge AW electrical design is based on the maximum expansion joint movement opening of 1243 mm.
2. Arrange and group the flexible 103 mm conduits to maintain a minimum voltage level separation of 460 mm between systems.
3. Existing conduits (*) inside pipe beam are supplied in Skyway contract.
4. Terminate conduit to the next lighting fixture and splice wiring to circuit UP131-8 of Skyway Structure. Contractor to adjust as required.
5. Furnish and install 4-25.4 mm innerducts inside TOS/COM conduits (*6520, 6525) and 1-25.4 mm innerduct per BASE fiber optic cable in TOS/COM cable tray.
6. Furnish and install BASE fiber optic cable in innerduct inside TOS/COM conduit and cable tray. See sheet E-1100.

NOTES:

1. Minimum radius of cable tray fittings shall be 610 mm.
2. Minimum radius of 103 mm conduit bends shall be 610 mm.
3. Cables/circuits passing through the hinge locations shall be provided with cable identification tag at both ends of Hinge.
4. For additional work related not shown on this drawing, see Electrical Special Provisions.
5. Section A-A and B-B see sheet E-132B.
6. Section C-C and Section D-D, see sheet E-132C.

REGISTERED PROFESSIONAL ENGINEER S. A. ESTOQUE JR No. E-10151 Exp. 12/31/2008 ELECTRICAL STATE OF CALIFORNIA

FOR REVISION ONLY 1

REGISTERED PROFESSIONAL ENGINEER SYN YEE CHIN No. 18186 Exp. 09/30/2011 ELECTRICAL STATE OF CALIFORNIA

FOR REVISION ONLY 2

PLAN
SCALE: 1:75

REQUEST FOR INFORMATION NOT ADDRESSED IN THIS CCO REMAIN IN FORCE					
2	03/01/11	BASE INTEGRATION	RSB	WB	150
1	02/25/08	CABLE TRAY CHANGES	JD	RG SE	42S1
MARK	DATE	DESCRIPTIONS	BY	CH'D	CCO#
		REVISIONS			

CONTRACT CHANGE ORDER NO. 150
SHEET 15 OF 42

SAS SUPERSTRUCTURE AND SKYWAY STRUCTURE GIRDER INTERFACE WESTBOUND

AS NOTED

E-101A

THIS PLAN IS ACCURATE FOR ELECTRICAL WORK ONLY.

ALL DIMENSIONS ARE IN MILLIMETERS UNLESS OTHERWISE SHOWN

FOR REDUCED PLANS ORIGINAL 0 20 40 60 80

DGN FILE =>04-0120f1 0155R02.dgn

LAST REVISION DATE PLOTTED => 25-FEB-2011

CALCULATED/DESIGNED BY	CYF	DATE 12/03	REVISED BY EJL
CHECKED BY	EJL	1/04	DATE REVISED 2/04

DESIGN OVERSIGHT
BEHZAD GOLEMOHAMMADI

STATE OF CALIFORNIA - DEPARTMENT OF TRANSPORTATION
Caltrans

DRAFT 1 (03/01/11)

DIST	COUNTY	ROUTE	KILOMETER POST TOTAL PROJECT	SHEET No	TOTAL SHEETS
04	SF	80	13.2/13.9	166 S2R1	1204

REGISTERED ELECTRICAL ENGINEER 6/12/08 DATE

PLANS APPROVAL DATE

REGISTERED PROFESSIONAL ENGINEER FADI WALIEDDINE No. 11465 Exp. 12/31/2009 ELECTRICAL STATE OF CALIFORNIA

PB AMERICAS, Inc.
A Parsons Brinckerhoff Company
303 Second St., Suite 700N
San Francisco, CA 94107-1317

The State of California or its officers or agents shall not be responsible for the accuracy or completeness of electronic copies of this plan sheet.

Caltrans now has a web site! To get to the web site, go to http://www.dot.ca.gov

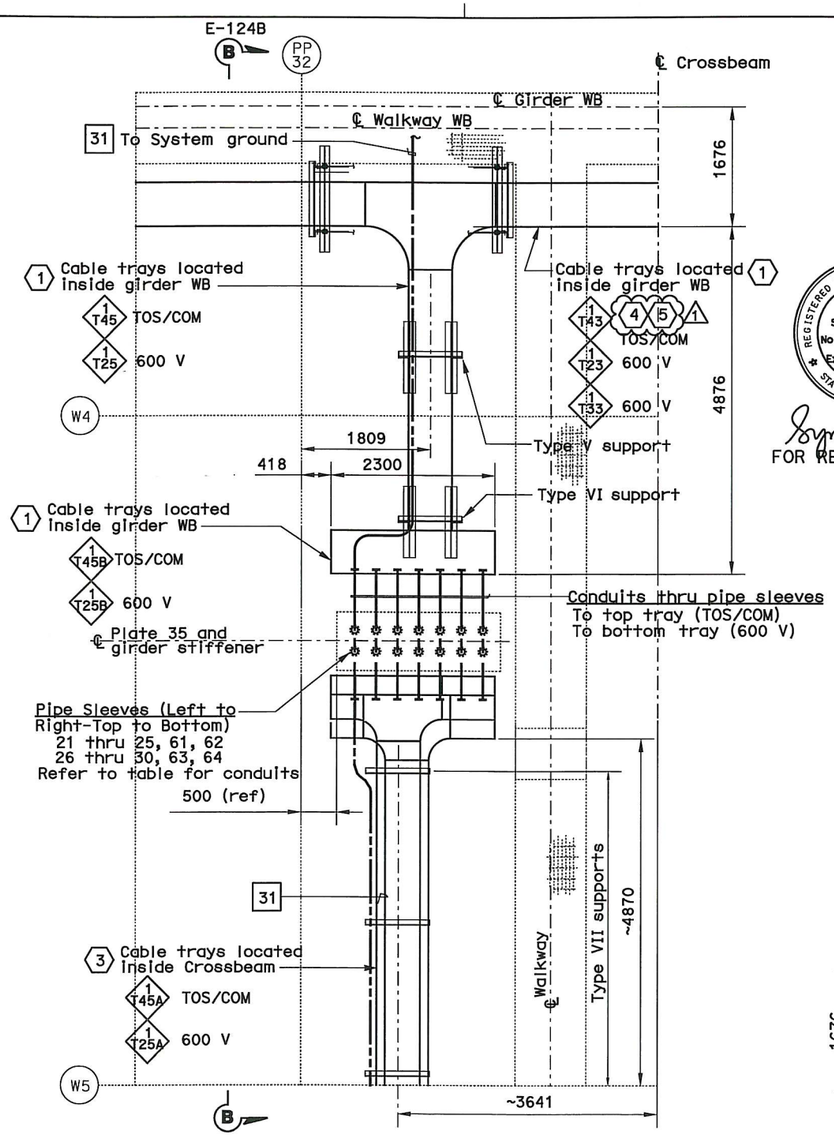

CABLE TRAY PLAN - DETAIL 4

(TYPICAL FOR PP 32, PP 50, PP 80 AND PP 110)
SCALE 1:40

REGISTERED PROFESSIONAL ENGINEER SYN YEE CHIN No. 18186 Exp. 09/30/2011 ELECTRICAL STATE OF CALIFORNIA

Synyee Chin
FOR REVISION ONLY
1

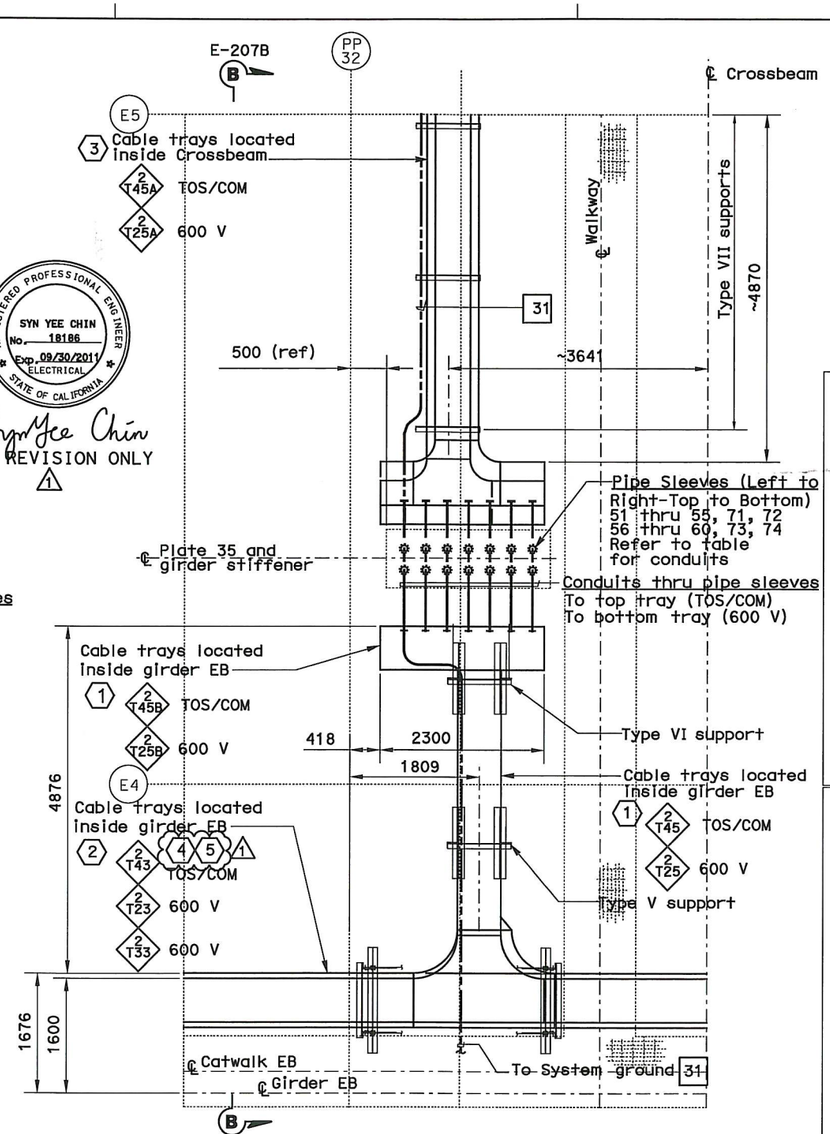

CABLE TRAY PLAN - DETAIL 5

(TYPICAL FOR PP 32, PP 50, PP 80 AND PP 110)
SCALE 1:40

			CONDUIT NUMBER/PIPE SLEEVE	TRAY NO. FROM	TRAY NO. TO
WESTBOUND	CROSSBEAM AT PP-32	TOP	4 211A 21, 4 211B 22, 4 211C 23, 4 211D 24, 4 211E 25, 4 211L 61, 4 211M 62	1 T45A	1 T45B
		BOTTOM	4 211F 26, 4 211G 27, 4 211H 28, 4 211J 29, 4 211K 30, 4 211N 63, 4 211P 64	1 T25A	1 T25B
	4 5 1 CROSSBEAM AT PP-50	TOP	4 213A 21, 4 213B 22, 4 213C 23, 4 213D 24, 4 213E 26, 4 213L 61, 4 213M 62	1 T46A	1 T46B
		BOTTOM	4 213F 26, 4 213G 27, 4 213H 28, 4 213J 29, 4 213K 30, 4 213N 63, 4 213P 64	1 T26A	1 T26B
	CROSSBEAM AT PP-80	TOP	4 215A 21, 4 215B 22, 4 215C 23, 4 215D 24, 4 215E 27, 4 215L 61, 4 215M 62	1 T47A	1 T47B
		BOTTOM	4 215F 27, 4 215G 27, 4 215H 28, 4 215J 29, 4 215K 30, 4 215N 63, 4 215P 64	1 T27A	1 T27B
	CROSSBEAM AT PP-110	TOP	4 217A 21, 4 217B 22, 4 217C 23, 4 217D 24, 4 217E 28, 4 217L 61, 4 217M 62	1 T48A	1 T48B
		BOTTOM	4 217F 28, 4 217G 28, 4 217H 28, 4 217J 29, 4 217K 30, 4 217N 63, 4 217P 64	1 T28A	1 T28B
EASTBOUND	CROSSBEAM AT PP-32	TOP	5 215A 51, 5 215B 52, 5 215C 53, 5 215D 54, 5 215E 55, 5 215L 71, 5 215M 72	2 T45A	2 T45B
		BOTTOM	5 215F 56, 5 215G 57, 5 215H 58, 5 215J 59, 5 215K 60, 5 215N 73, 5 215P 74	2 T25A	2 T25B
	4 5 1 CROSSBEAM AT PP-50	TOP	5 217A 51, 5 217B 52, 5 217C 53, 5 217D 54, 5 217E 55, 5 217L 71, 5 217M 72	2 T46A	2 T46B
		BOTTOM	5 217F 56, 5 217G 57, 5 217H 58, 5 217J 59, 5 217K 60, 5 217N 73, 5 217P 74	2 T26A	2 T26B
	CROSSBEAM AT PP-80	TOP	5 219A 51, 5 219B 52, 5 219C 53, 5 219D 54, 5 219E 55, 5 219L 71, 5 219M 72	2 T47A	2 T47B
		BOTTOM	5 219F 56, 5 219G 57, 5 219H 58, 5 219J 59, 5 219K 60, 5 219N 73, 5 219P 74	2 T27A	2 T27B
	CROSSBEAM AT PP-110	TOP	5 300A 51, 5 300B 52, 5 300C 53, 5 300D 54, 5 300E 55, 5 300L 71, 5 300M 72	2 T48A	2 T48B
		BOTTOM	5 300F 56, 5 300G 57, 5 300H 58, 5 300J 59, 5 300K 60, 5 300N 73, 5 300P 74	2 T28A	2 T28B

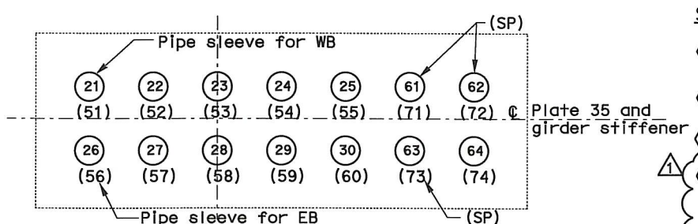

PIPE SLEEVE LOCATION

NO SCALE

SHEET NOTES:

1. For continuation inside WB girder, -at Crossbeam #4, see sheet E-96.
2. For continuation inside EB girder, -at Crossbeam #4, see sheet E-181.
3. For continuation inside Crossbeam,
4. Furnish and install 1-25.4 mm innerduct per BASE fiber optic cable in TOS/COM cable tray and 3-25.4 mm innerducts per conduit 4213A, 4213C and 5217C (refer to Crossbeam at PP-50).
5. Furnish and install BASE fiber optic cable in innerduct and conduit. See sheets E-1100 and E-1101.

NOTES:

1. Reference:
   - For circuit, conduit/cable tray schedules, see sheets starting at E-401.
2. For location of pipe sleeves at the Crossbeam/Service platform, see Typical crossbeam details sheets.
3. For cable tray support details, see AS sheets.
4. (SP) Denotes spare pipe sleeve with conduit. Contractor to provide plug at each ends.

REQUEST FOR INFORMATION NOT ADDRESSED IN THIS CCO REMAIN IN FORCE

MARK	DATE	DESCRIPTIONS	BY	CH'D	CCO#
1	03/01/11	BASE INTEGRATION	RSB	WB	150
0	03/30/09	SERVICE PLATFORM ELECTRICAL CHANGES	RR MP	RG FW	55

REVISIONS

CONTRACT CHANGE ORDER NO. 150
SHEET 16 OF 42

DETAILS
SAS SUPERSTRUCTURE GIRDER WESTBOUND CONDUIT, GROUNDING AND CABLE TRAY PLAN

SCALE AS NOTED

THIS PLAN IS ACCURATE FOR ELECTRICAL WORK ONLY.

ALL DIMENSIONS ARE IN MILLIMETERS UNLESS OTHERWISE SHOWN.

E-114B

DRAFT 1 (03/01/11)
STATE OF CALIFORNIA - DEPARTMENT OF TRANSPORTATION
Caltrans
DESIGN OVERSIGHT: BEHZAD GOLEMOHAMMADI
CALCULATED/DESIGNED BY | CHECKED BY
DATE | REVISED BY | DATE REVISED

LAST REVISION | DATE PLOTTED => JUL-FEB-2011

FOR REDUCED PLANS ORIGINAL 0 20 40 60 80 | DGN FILE =>04-0120f1 0166S02R01.dgn

DIST	COUNTY	ROUTE	KILOMETER POST TOTAL PROJECT	SHEET No	TOTAL SHEETS
04	SF	80	13.2/13.9	168 R4	1204

12/19/02
REGISTERED ELECTRICAL ENGINEER DATE

12-6-04
PLANS APPROVAL DATE

REGISTERED PROFESSIONAL ENGINEER JENS ERLINGSSON No. 8249 Exp. 9/30/06 ELECTRICAL STATE OF CALIFORNIA

PB POWER, Inc.
A Parsons Brinckerhoff Company
303 Second St., Suite 700N
San Francisco, CA 94107-1317

The State of California or its officers or agents shall not be responsible for the accuracy or completeness of electronic copies of this plan sheet.

Caltrans now has a web site! To get to the web site, go to http://www.dot.ca.gov

Caltrans Metric

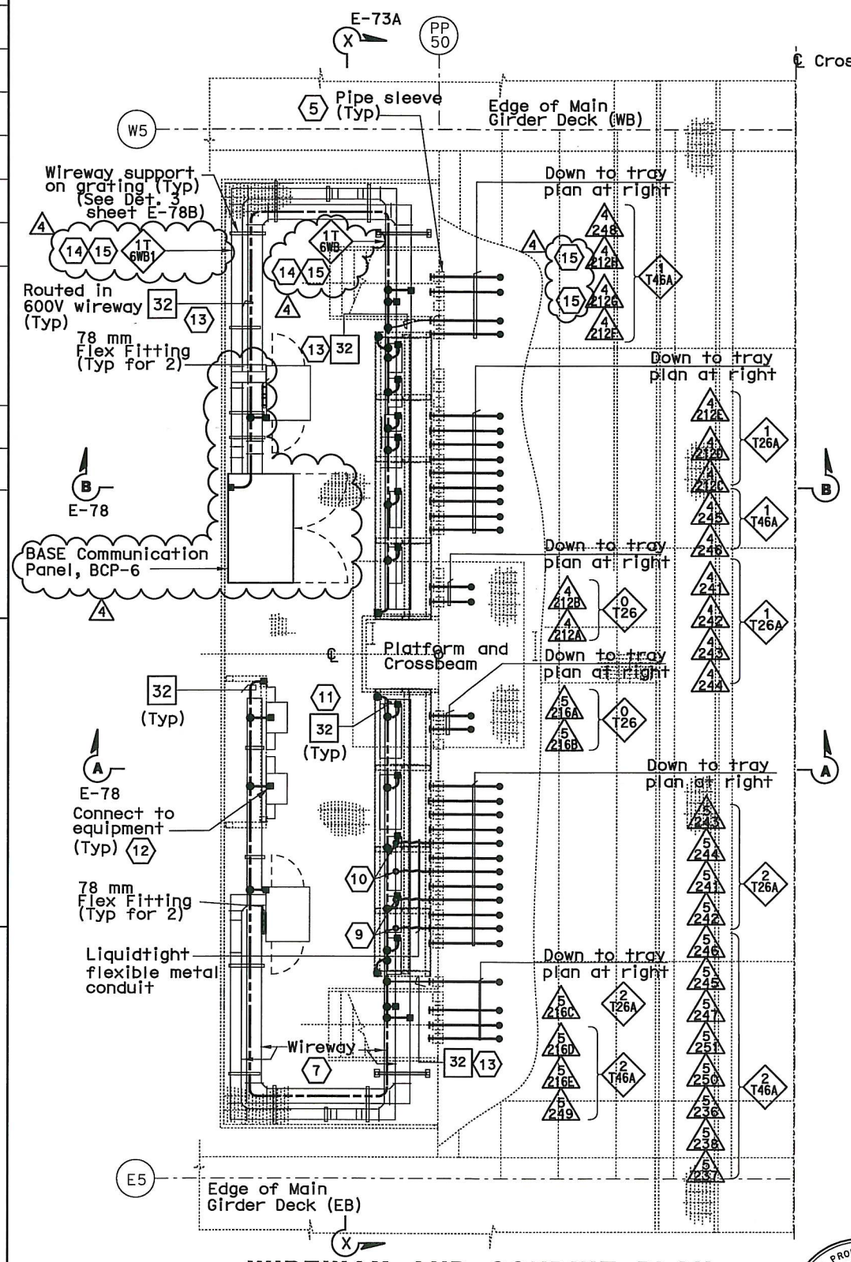

WIREWAY AND CONDUIT PLAN AT SERVICE PLATFORM

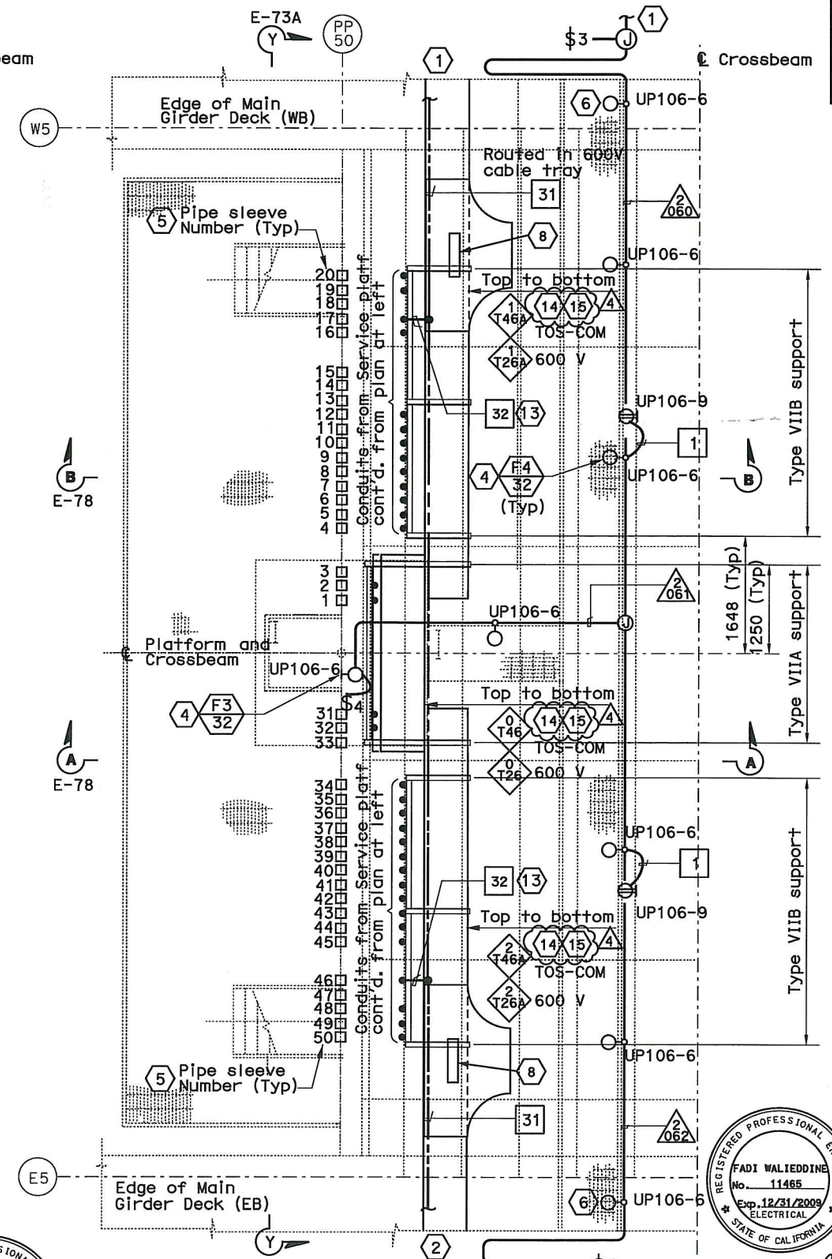

CABLE TRAY AND CONDUIT PLAN INSIDE CROSSBEAM

SCALE 1:40

SHEET NOTES:

1. For continuation inside WB girder, see sheets E-98 and E-114B.
2. For continuation inside EB girder, see sheet E-183 and E-114B.
3. Deleted.
4. For typical lighting fixture installation see Details 2 and 3, sheet E-123.
5. Pipe sleeve without conduit going through is spare. Contractor to provide plug or cap at both ends. For location see Section Y-Y on sheet E-73A.
6. Locate light fixture approximate half way between girder wall and girder walkway.
7. For wireway numbers, see sheet E-73.
8. Fiber Optic splice closure, see Typical Fiber Optic Tray Detail Sheet E-355.
9. Terminate conduits at Terminal Box #TEL-6.
10. Terminate conduits at Terminal Box #COM-6.
11. See Detail 4, Dwg E-111B for Structural rack grounding.
12. #2 Bare Copper Wire in conduit, For installation details, see sheet E-73A.
13. Ground conductor shall be protected from damage when exposed outside the structure. Route ground conductor in liquidtight flexible metal conduit for protection, unless noted otherwise on plans. For additional installation details, see Detail 7, sheet E-111A.
14. Furnish and install BCP-6 and 1-25.4 mm innerduct per BASE fiber optic cable in TOS/COM cable tray and 3-25.4 mm innerducts per conduit 4212H and 4212G.
15. Furnish and install BASE fiber optic cable in innerduct, conduit and wireway to BCP-6. See sheets E-1100 and E-1101.

NOTES:

1. Reference: - For circuit, conduit/cable tray schedules, see sheets starting at E-401.
2. For wireway support details, see AS sheets.
3. For location of pipe sleeves at the utility platform crossbeams, see Typical Crossbeam Details sheets.
4. For platform elevations, see sheet E-73A.

THIS PLAN IS ACCURATE FOR ELECTRICAL WORK ONLY.

REGISTERED PROFESSIONAL ENGINEER SYN YEE CHIN No. 18186 Exp. 09/30/2011 ELECTRICAL STATE OF CALIFORNIA

FOR REVISION ONLY 4

REGISTERED PROFESSIONAL ENGINEER FADI WALIEDDINE No. 11465 Exp. 12/31/2009 ELECTRICAL STATE OF CALIFORNIA

FOR REVISION ONLY 1 2 3

REQUEST FOR INFORMATION NOT ADDRESSED IN THIS CCO REMAIN IN FORCE

MARK	DATE	DESCRIPTIONS	BY	CH'D	CCO#
4	03/01/11	BASE INTEGRATION	RSB	WB	150
3	11/20/09	ELECTRICAL GROUNDING	AWG RR	FW	75
2	06/25/09	SERVICE PLATFORM ELECTRICAL CHANGES	RR RY	RG FW	55
1	03/30/09	SERVICE PLATFORM ELECTRICAL CHANGES	RR MP	RG FW	55

REVISIONS

CONTRACT CHANGE ORDER NO. 150
SHEET 17 OF 42

DETAILS
SAS SUPERSTRUCTURE GIRDER WESTBOUND PLATFORM 6 CONDUIT, LIGHTING, AND GROUNDING PLAN

SCALE AS NOTED

E-116

ALL DIMENSIONS ARE IN MILLIMETERS UNLESS OTHERWISE SHOWN.

FOR REDUCED PLANS ORIGINAL 0 20 40 60 80 DGN FILE =>04-0120f1 0168R04.dgn

DRAFT 1 (03/01/11)
STATE OF CALIFORNIA - DEPARTMENT OF TRANSPORTATION
Caltrans

DESIGN OVERSIGHT: BEHZAD GOLEMOHAMMADI

CALCULATED/DESIGNED BY	CHECKED BY	DATE 08/01	REVISED BY	REVISED
JP	BL	11/01		

LAST REVISION | DATE PLOTTED => 28-FEB-2011

DIST	COUNTY	ROUTE	KILOMETER POST TOTAL PROJECT	SHEET No	TOTAL SHEETS
04	SF	80	13.2/13.9	178 R3	1204

REGISTERED ELECTRICAL ENGINEER 12/19/02 DATE

12-6-04
PLANS APPROVAL DATE

REGISTERED PROFESSIONAL ENGINEER JENS ERLINGSSON No. 8249 Exp. 9/30/06 ELECTRICAL STATE OF CALIFORNIA

PB POWER, Inc.
A Parsons Brinckerhoff Company
303 Second St., Suite 700N
San Francisco, CA 94107-1317

The State of California or its officers or agents shall not be responsible for the accuracy or completeness of electronic copies of this plan sheet.

Caltrans now has a web site! To get to the web site, go to http://www.dot.ca.gov

Caltrans Metric

CABLE TRAY SUPPORT SCHEDULE

Item	Type	Detail Sheet	Item	Type	Detail Sheet
1	VA	E-122	6	1	AS-7
2	VB	E-122	7	2	AS-7
3	VC	E-122	8	3	AS-7
4	VD	E-122	9	4	AS-7
5	VE	E-122A	10	5	AS-7

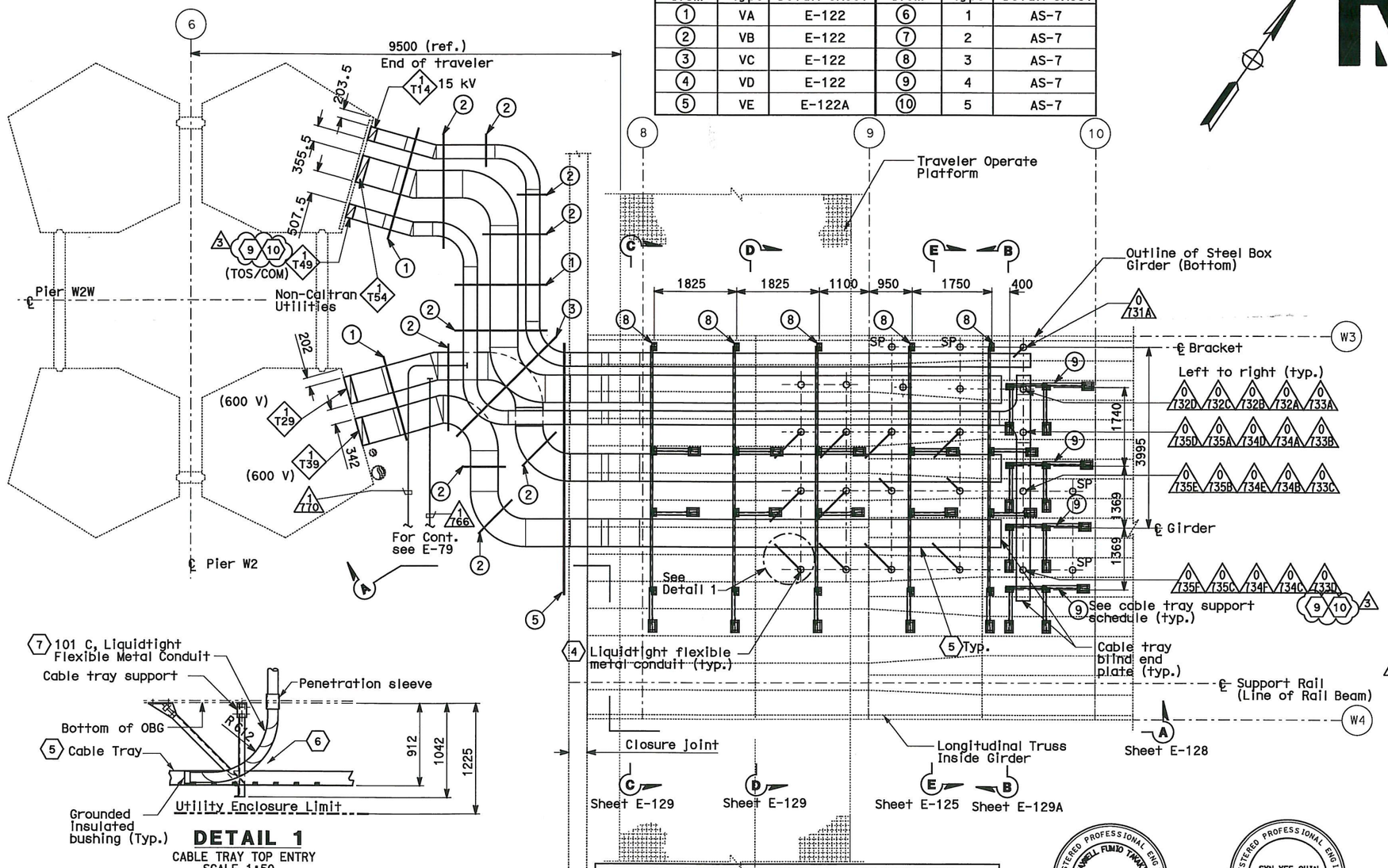

DETAIL 1
CABLE TRAY TOP ENTRY
SCALE 1:50

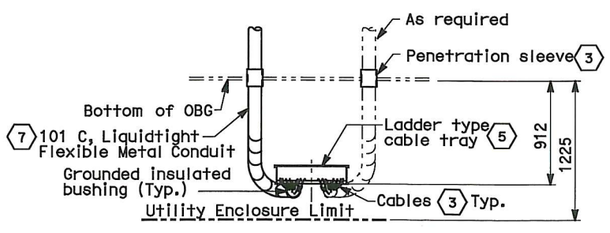

ALTERNATE
CABLE TRAY BOTTOM ENTRY
(Cable tray supports not shown for clarity)
SCALE 1:50

THIS PLAN ACCURATE FOR ELECTRICAL WORK ONLY.

REQUEST FOR INFORMATION NOT ADDRESSED IN THIS CCO REMAIN IN FORCE

MARK	DATE	DESCRIPTIONS	BY	CH'D	CCO#
3	03/01/11	BASE INTEGRATION	RSB	WB	150
2	03/26/10	DEHUMIDIFIER SCADA INTERFACE	RR	RG FW	130
1	02/25/08	CABLE TRAY CHANGES	RG	SE	42S1

REVISIONS

CONTRACT CHANGE ORDER NO. 150
SHEET 18 OF 42

REGISTERED PROFESSIONAL ENGINEER MARCELL FUMIO TAKAKI No. E 8651 Exp. 9/30/2010 ELECTRICAL STATE OF CALIFORNIA

FOR REVISION ONLY 1

REGISTERED PROFESSIONAL ENGINEER SYN YEE CHIN No. 18186 Exp. 09/30/2011 ELECTRICAL STATE OF CALIFORNIA

FOR REVISION ONLY 2 3

PARTIAL GIRDER PLAN CABLE TRAY LAYOUT
SCALE 1:50

SHEET NOTES:

1. For cable tray supports details, see Cable Tray Support Schedule table.
2. Cable trays shall be as specified per specification unless noted otherwise.
3. Cable and location of penetrations thru girder plate, see Utility Detail No. 1 and Utility Layout respectively of Superstructure and Tower Drawings. To prevent moisture from entering girder, contractor to seal the space between sleeves and conduit. Spare pipe sleeves shall be provided with threaded cap at exterior end.
4. For continuation of conduit to cable trays inside OBG see E-126A.
5. Cable trays shall be anchored to supports and shall have solid cover with heavy duty cover clamps.
6. Install neoprene rubber around cable tray cover opening for protection to liquidtight flexible metal conduits as it enter the cable tray. Seal opening as needed.
7. Liquidtight flexible metal conduits shall be anchored to supports or cable trays.
8. Contractor may adjust the location of cable tray supports below W2 Pier Cap Beam to suit field condition and provide additional seismic bracing as required.
9. Furnish and install 4-25.4 mm innerducts inside TOS/COM conduit (0733D) and 1-25.4 mm innerduct per BASE fiber optic cable in TOS/COM cable tray. (3)
10. Furnish and install BASE fiber optic cable in innerduct inside TOS/COM conduit and cable tray. See sheet E-1100.

NOTES:

1. References:
   - For circuit and conduit/cable tray schedules, see sheets starting at E-401.
   - For locations of cable tray support embeds, see AS sheets.
2. For other related work, not shown on this sheet, see Electrical Special Provisions.
3. For actual conduit locations, see girder level, cable tray and conduits plans. See sheets E-96 thru E-101.
4. For cable tray support, embedded unistrut, and cable tray locations are shown in scaled locations.

DETAILS
SAS SUPERSTRUCTURE GIRDER WESTBOUND
TYPICAL TRAY AND CONDUIT INSTALLATION AT PIER W2W
SCALE AS NOTED

ALL DIMENSIONS ARE IN MILLIMETERS UNLESS OTHERWISE SHOWN

E-126

REVISED BY	DATE REVISED

CALCULATED/DESIGNED BY	FK	DATE 08/02
CHECKED BY	IAH	08/02

DESIGN OVERSIGHT
BEHZAD GOLEMOHAMMADI

STATE OF CALIFORNIA - DEPARTMENT OF TRANSPORTATION
Caltrans

DRAFT 1 (03/01/11)

LAST REVISION | DATE PLOTTED => 25-FEB-2011

FOR REDUCED PLANS ORIGINAL 0 20 40 60 80 | DGN FILE =>04-0120f1 0178R03.dgn

DIST	COUNTY	ROUTE	KILOMETER POST TOTAL PROJECT	SHEET No	TOTAL SHEETS
04	SF	80	13.2/13.9	178 S1R1	1204

REGISTERED ELECTRICAL ENGINEER — 2/22/08 DATE

PLANS APPROVAL DATE

REGISTERED PROFESSIONAL ENGINEER S. A. ESTOQUE No. E-10151 Exp. 12/31/2008 ELECTRICAL STATE OF CALIFORNIA

REGISTERED PROFESSIONAL ENGINEER SYN YEE CHIN No. 18186 Exp. 09/30/2011 ELECTRICAL STATE OF CALIFORNIA

Syn Yee Chin
FOR REVISION ONLY
1

Caltrans Metric

PB AMERICAS, Inc.
A Parsons Brinckerhoff Company
303 Second St., Suite 700N
San Francisco, CA 94107-1317

The State of California or its officers or agents shall not be responsible for the accuracy or completeness of electronic copies of this plan sheet.

Caltrans now has a web site! To get to the web site, go to http://www.dot.ca.gov

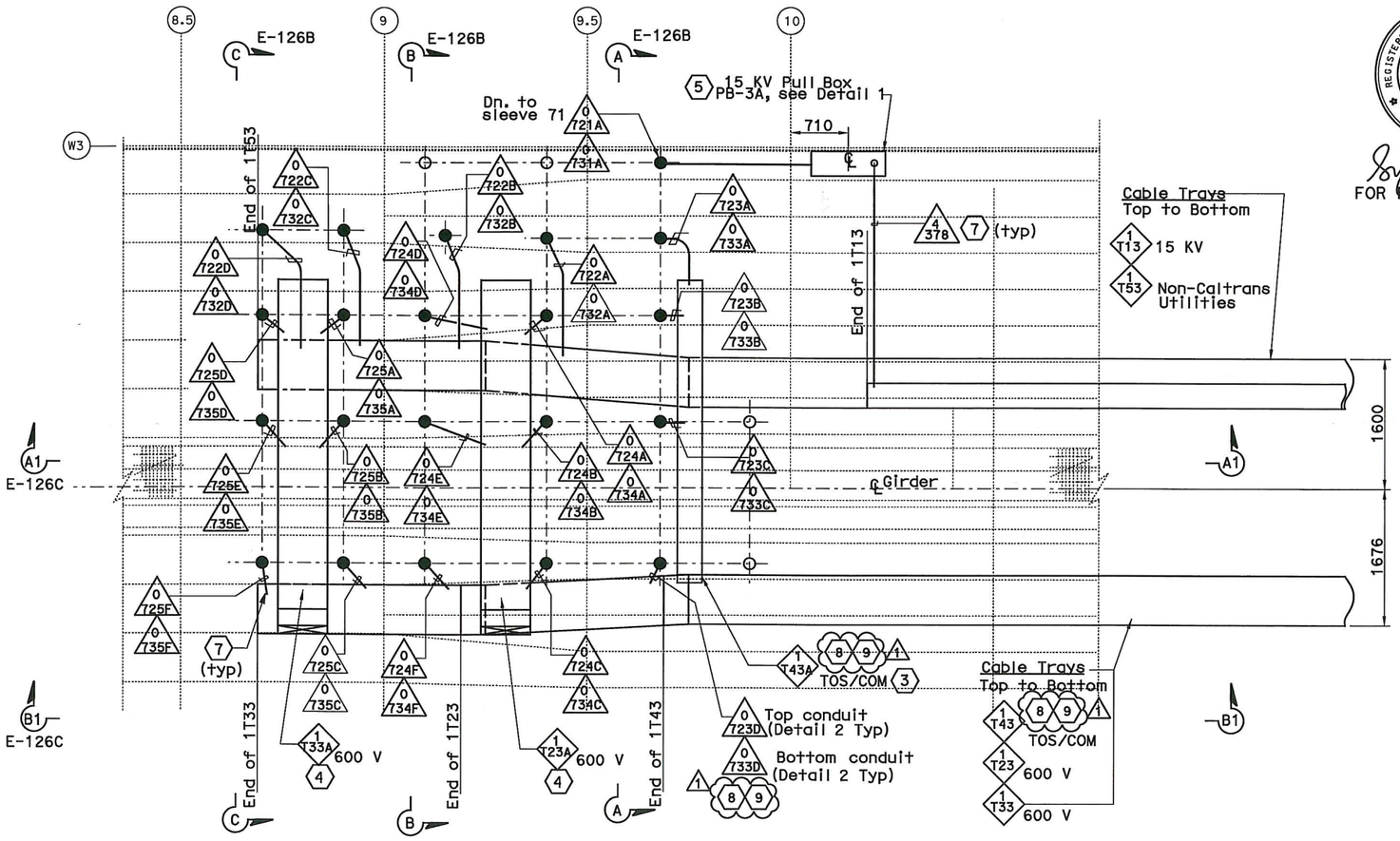

PARTIAL GIRDER CABLE TRAY-PLAN (6)

SCALE 1:150

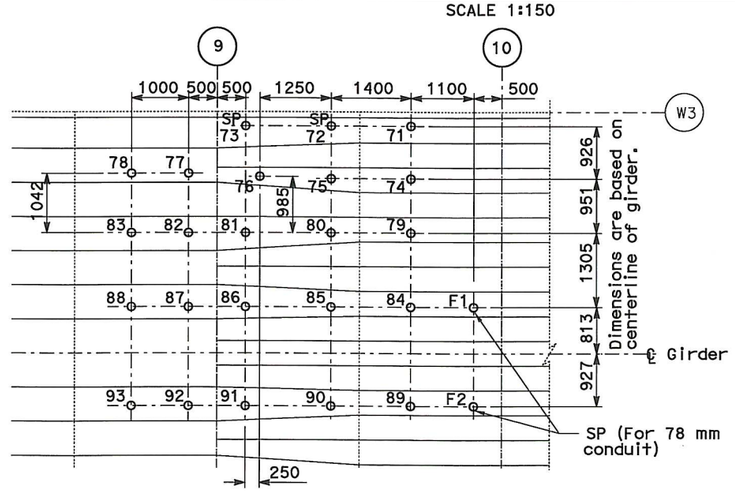

PIPE SLEEVE LOCATION-PLAN (6)

SCALE 1:100

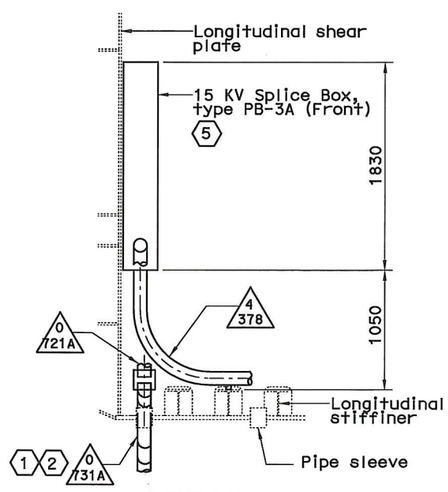

DETAIL 1

SCALE 1:50

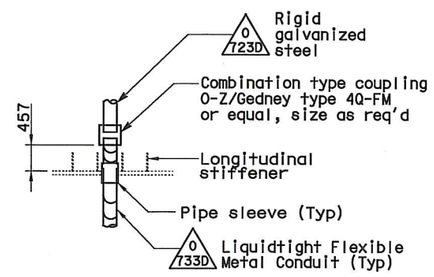

DETAIL 2

SCALE 1:50

SHEET NOTES:

1. To prevent moisture from entering girder. contractor to seal the space between sleeves and conduits.
2. Down to cable tray, for continuation see sheet E-126.
3. Provide drop out tray fitting.
4. Provided vertical bend segment type fitting. Fitting radius shall be 305mm.
5. 15 KV splice box is bolted to longitudinal shear plate and installed by field.
6. See table A sheet E-126B.
7. Provide insulated ground bushing at end of conduit.
8. (1) Furnish and install 4-25.4 mm innerducts inside TOS/COM conduit (0723D, 0733D) and 1-25.4 mm innerduct per BASE fiber optic cable in TOS/COM cable tray.
9. Furnish and install BASE fiber optic cable in innerduct inside TOS/COM conduit and cable tray. See sheet E-1100.

NOTES:

1. References:
   - For circuit and conduit/cable tray schedules, see sheets starting at E-401.
2. (SP) Denotes spare pipe sleeve for future 103 mm conduit. Contractor to provide threaded cap at exterior end (Unless Otherwise Noted).
3. For cable tray supports details, see AS sheets.
4. Cable trays fittings shall be 610 radius.

REQUEST FOR INFORMATION NOT ADDRESSED IN THIS CCO REMAIN IN FORCE

MARK	DATE	DESCRIPTIONS	BY	CH'D	CCO#
1	03/01/11	BASE INTEGRATION	RSB	WB	150
0	02/25/08	CABLE TRAY CHANGES	TW	RG SE	42S1

REVISIONS

CONTRACT CHANGE ORDER NO. 150
SHEET 19 OF 42

DETAILS
SAS SUPERSTRUCTURE GIRDER WESTBOUND CABLE TRAY AND CONDUIT AT PIER W2W

SCALE AS NOTED

THIS PLAN ACCURATE FOR ELECTRICAL WORK ONLY.

THIS PLAN ACCURATE FOR ELECTRICAL WORK ONLY.

E-126A

DRAFT 1 (03/01/11)

STATE OF CALIFORNIA - DEPARTMENT OF TRANSPORTATION

Caltrans

DESIGN OVERSIGHT: BEHZAD GOLEMOHAMMADI

CALCULATED/DESIGNED BY | CHECKED BY | DATE REVISED BY | DATE REVISED

FOR REDUCED PLANS ORIGINAL 0 20 40 60 80

DGN FILE =>04-0120f1 0178S01R01.dgn

LAST REVISION | DATE PLOTTED => 25-FEB-2011

DIST	COUNTY	ROUTE	KILOMETER POST TOTAL PROJECT	SHEET No	TOTAL SHEETS
04	SF	80	13.2/13.9	187 R2	1204

REGISTERED ELECTRICAL ENGINEER 2/6/04 DATE

12-6-04
PLANS APPROVAL DATE

REGISTERED PROFESSIONAL ENGINEER JENS ERLINGSSON No. 8249 Exp. 9/30/06 ELECTRICAL STATE OF CALIFORNIA

PB POWER, Inc.
A Parsons Brinckerhoff Company
303 Second St., Suite 700N
San Francisco, CA 94107-1317

The State of California or its officers or agents shall not be responsible for the accuracy or completeness of electronic copies of this plan sheet.

Caltrans now has a web site! To get to the web site, go to http://www.dot.ca.gov

Caltrans Metric

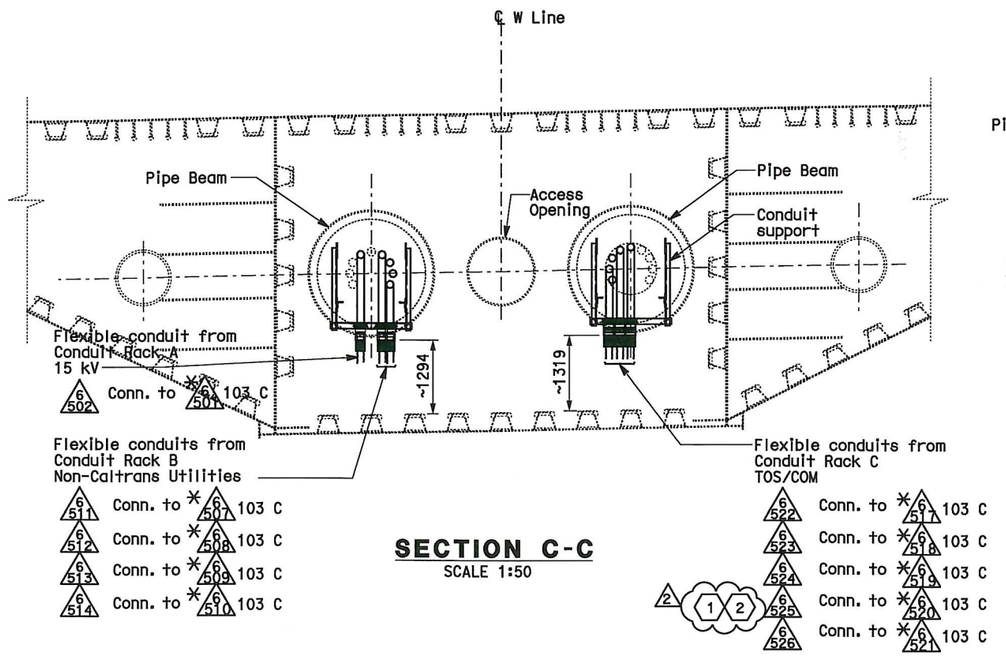

SECTION C-C
SCALE 1:50

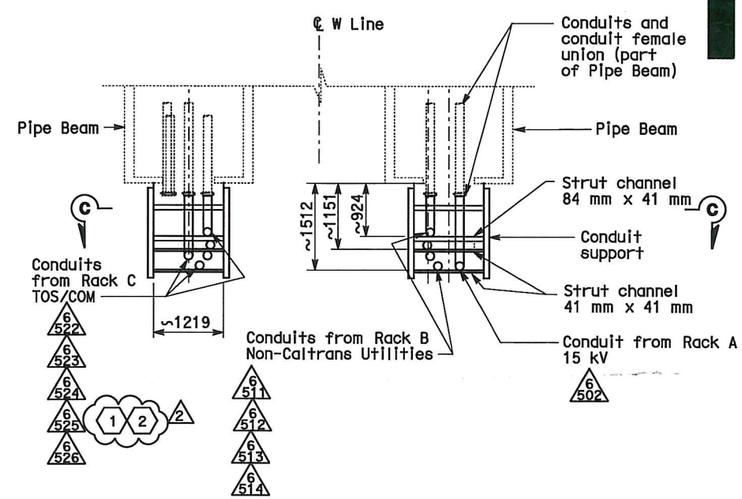

PLAN - DETAIL 1
SCALE 1:50

NOTES:

1. Materials, hardware and fittings shall be galvanized or stainless steel. For additional requirements, see Electrical Special Provisions.
2. References:
   - For Westbound plans and sections, see sheets E-101A and E-132A.
3. Existing conduits (*) inside pipe beam are supplied in Skyway contract.

SHEET NOTES:

2 1 Furnish and install 4-25.4 mm innerducts inside TOS/COM conduits (*6520, 6525) and 1-25.4 mm innerduct per BASE fiber optic cable in TOS/COM cable tray.

2 Furnish and install BASE fiber optic cable in innerduct inside TOS/COM conduit and cable tray. See sheet E-1100.

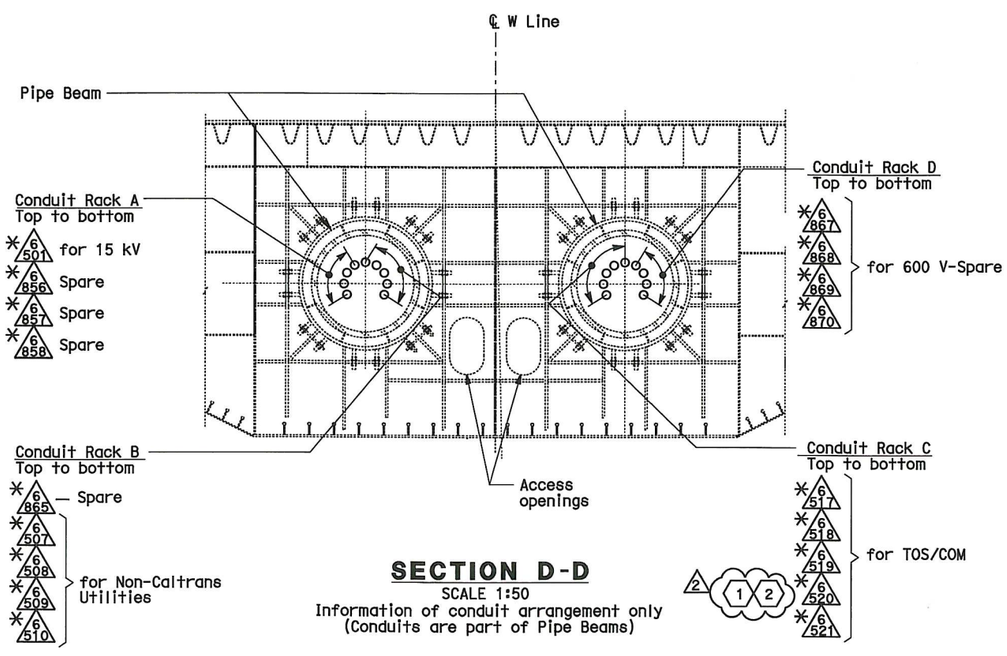

SECTION D-D
SCALE 1:50
Information of conduit arrangement only
(Conduits are part of Pipe Beams)

REGISTERED PROFESSIONAL ENGINEER SYN YEE CHIN No. 18186 Exp. 09/30/2011 ELECTRICAL STATE OF CALIFORNIA
Syn Yee Chin
FOR REVISION ONLY
2

REGISTERED PROFESSIONAL ENGINEER S. A. ESTOQUE, JR. No. E-10151 Exp. 12/31/2008 ELECTRICAL STATE OF CALIFORNIA
FOR REVISION ONLY
1

REQUEST FOR INFORMATION NOT ADDRESSED IN THIS CCO REMAIN IN FORCE

MARK	DATE	DESCRIPTIONS	BY	CH'D	CCO#
2	03/01/11	BASE INTEGRATION	RSB	WB	150
1	02/25/08	CABLE TRAY CHANGES	JD	RG SE	42S1

REVISIONS

CONTRACT CHANGE ORDER NO. 150
SHEET 20 OF 42

DETAILS
SAS SUPERSTRUCTURE AND SKYWAY STRUCTURE GIRDER INTERFACE WESTBOUND HINGE AW SUPPORTS
SCALE AS NOTED

E-132C

DATE	REVISED BY	DATE REVISED
12/03	CYF	2/04
1/04	EJL	EJL

CALCULATED/DESIGNED BY
CHECKED BY

DESIGN OVERSIGHT
BEHZAD GOLEMOHAMMADI

STATE OF CALIFORNIA - DEPARTMENT OF TRANSPORTATION
Caltrans

THIS PLAN ACCURATE FOR ELECTRICAL WORK ONLY.

ALL DIMENSIONS ARE IN MILLIMETERS UNLESS OTHERWISE SHOWN

FOR REDUCED PLANS ORIGINAL 0 20 40 60 80 DGN FILE =>04-0120f1 0187R02.dgn

LAST REVISION DATE PLOTTED => 28-FEB-2011

DIST	COUNTY	ROUTE	KILOMETER POST TOTAL PROJECT	SHEET No	TOTAL SHEETS
04	SF	80	13.2/13.9	217 R2	1204

REGISTERED ELECTRICAL ENGINEER 12/19/02 DATE

12-6-04
PLANS APPROVAL DATE

REGISTERED PROFESSIONAL ENGINEER JENS ERLINGSSON No. 8249 Exp. 9/30/06 ELECTRICAL STATE OF CALIFORNIA

PB POWER, Inc.
A Parsons Brinckerhoff Company
303 Second St., Suite 700N
San Francisco, CA 94107-1317

The State of California or its officers or agents shall not be responsible for the accuracy or completeness of electronic copies of this plan sheet.

Caltrans now has a web site! To get to the web site, go to http://www.dot.ca.gov

Caltrans Metric

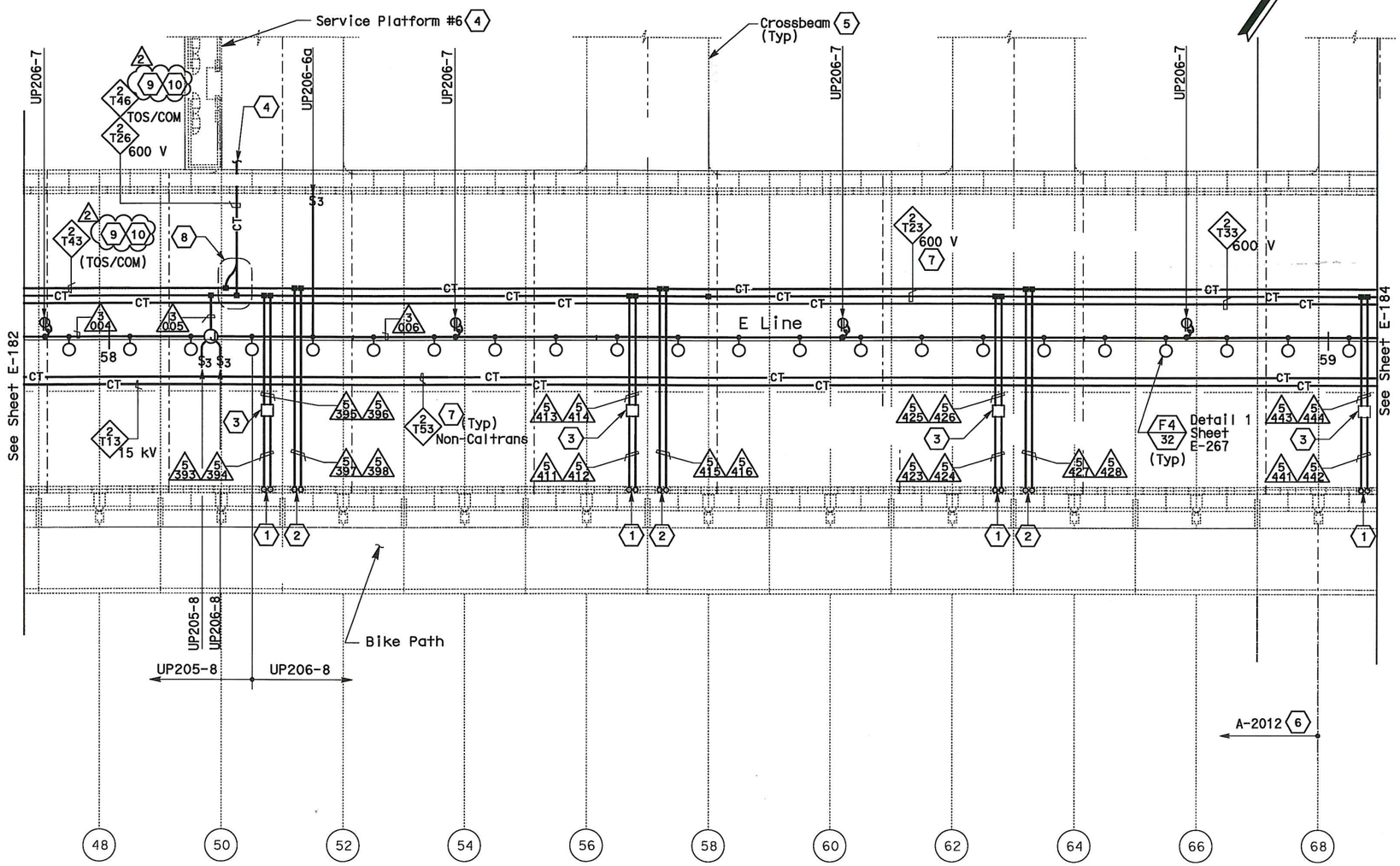

SAS SUPERSTRUCTURE - CONDUIT AND CABLE TRAY PLAN

SHEET NOTES:

(1) Conduit up to PB-LTG located in barrier, see sheet E-137.

(2) Conduit up to PB-COM located in barrier, see sheet E-137.

(3) PB-2A, locate on top of floor.

(4) For cable tray run and lighting inside crossbeam, see sheet E-116.

(5) For lighting inside crossbeam, see sheet E-119.

(6) For future light pipes, see sheets E-202 thru E-204. For light pipe schedule, see sheet E-217.

(7) For cable tray & ground bar support, refer to sheet E-208.

(8) For fiber splice tray detail. Refer to sheet E-355.

2 (9) Furnish and install 1-25.4 mm innerduct per BASE fiber optic cable in TOS/COM cable tray.

(10) Furnish and install BASE fiber optic cable in innerduct. See sheets E-1101.

NOTES:

1. References:
   - TOS equipment is shown for conduit routing only. For typical details of TOS controller and devices, see sheets E-344 through E-357.
   - For types of pull boxes, splice boxes and enclosures, see sheet E-169.
   - For bridge grounding plan, see sheet E-196.
   - For circuit and conduit/cable tray schedules, see sheets starting at E-401.
2. For other work related to items not shown on this sheet, see Electrical Special Provisions.
3. The girder lighting fixtures are shown diagrammatically. Contractor shall install fixtures at railing posts with a maximum of 8000 mm between fixtures. For types and typical lighting fixture installation details, see sheet E-206.
4. The cable trays are shown diagrammatically. For typical girder cable tray plans and sections, see sheets E-207 and E-208.

REGISTERED PROFESSIONAL ENGINEER FADI WALIEDDINE No. 11465 Exp. 12/31/2009 ELECTRICAL STATE OF CALIFORNIA

FOR REVISION ONLY (1)

REGISTERED PROFESSIONAL ENGINEER SYN YEE CHIN No. 18186 Exp. 09/30/2011 ELECTRICAL STATE OF CALIFORNIA

Syn Yee Chin
FOR REVISION ONLY (2)

REQUEST FOR INFORMATION NOT ADDRESSED IN THIS CCO REMAIN IN FORCE					
2	03/01/11	BASE INTEGRATION	RSB	WB	150
1	03/04/08	BARRIER MODIFICATIONS	TW	RG	44
MARK	DATE	DESCRIPTIONS	BY	CH'D	CCO#
		REVISIONS			

CONTRACT CHANGE ORDER NO. 150
SHEET 21 OF 42

THIS PLAN IS ACCURATE FOR ELECTRICAL WORK ONLY.

ALL DIMENSIONS ARE IN METERS UNLESS OTHERWISE SHOWN

FOR REDUCED PLANS ORIGINAL 0 20 40 60 80

DGN FILE =>04-0120f1 0217R02.dgn

SAS SUPERSTRUCTURE GIRDER EASTBOUND
LIGHTING AND ELECTRICAL SYSTEMS
SCALE 1:200

E-183

REVISED BY	DATE	EDC 08/02	CALCULATED/DESIGNED BY
DATE REVISED	08/02	CYF	CHECKED BY

DESIGN OVERSIGHT
BEHZAD GOLEMOHAMMADI

STATE OF CALIFORNIA - DEPARTMENT OF TRANSPORTATION

DRAFT 1 (03/01/11)

LAST REVISION | DATE PLOTTED => 25-FEB-2011

DIST	COUNTY	ROUTE	KILOMETER POST TOTAL PROJECT	SHEET No	TOTAL SHEETS
04	SF	80	13.2/13.9	218 R3	1204

12/19/02
REGISTERED ELECTRICAL ENGINEER DATE

12-6-04
PLANS APPROVAL DATE

REGISTERED PROFESSIONAL ENGINEER JENS ERLINGSSON No. 8249 Exp. 9/30/06 ELECTRICAL STATE OF CALIFORNIA

PB POWER, Inc.
A Parsons Brinckerhoff Company
303 Second St., Suite 700N
San Francisco, CA 94107-1317

The State of California or its officers or agents shall not be responsible for the accuracy or completeness of electronic copies of this plan sheet.

Caltrans now has a web site! To get to the web site, go to http://www.dot.ca.gov

Caltrans Metric

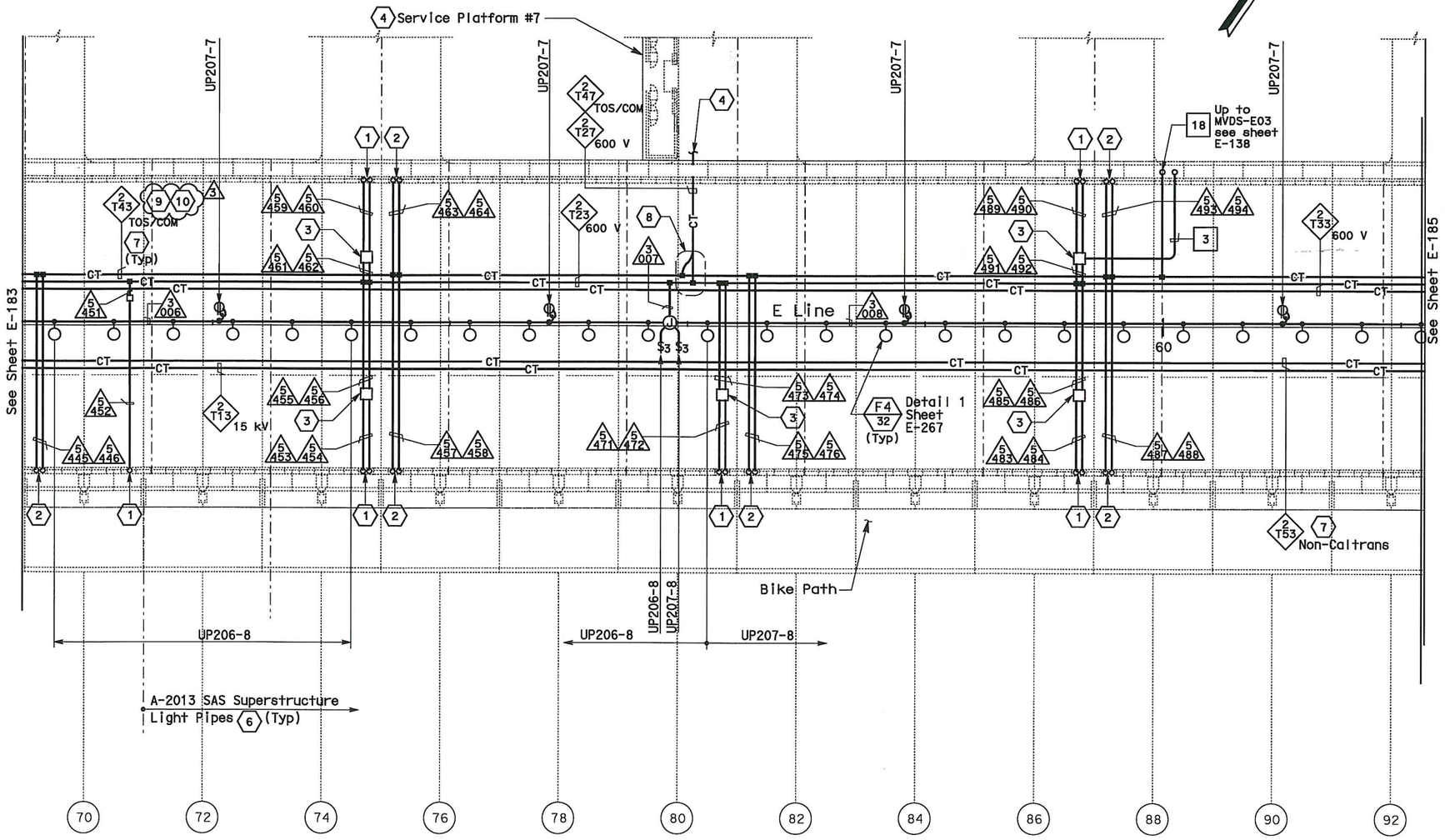

SAS SUPERSTRUCTURE - CONDUIT AND CABLE TRAY PLAN

SHEET NOTES:

1. Conduit up to PB-LTG located in barrier, see sheet E-138.
2. Conduit up to PB-COM located in barrier, see sheet E-138
3. PB-2A, locate on top of floor.
4. For cable tray run and lighting inside crossbeam, see sheet E-117.
5. For lighting inside crossbeam, see sheet E-119.
6. For future light pipes, see sheets E-202 thru E-204. For light pipe schedule, see sheet E-217.
7. For cable tray & ground bar support, refer to sheet E-208.
8. For fiber splice tray detail. Refer to sheet E-355.
9. Furnish and install 1-25.4 mm innerduct per BASE fiber optic cable in TOS/COM cable tray. (3)
10. Furnish and install BASE fiber optic cable in innerduct. See sheet E-1101.

NOTES:

1. References:
   - TOS equipment is shown for conduit routing only. For typical details of TOS controller and devices, see sheets E-344 through E-357.
   - For types of pull boxes, splice boxes and enclosures, see sheet E-169.
   - For bridge grounding plan, see sheet E-196.
   - For circuit and conduit/cable tray schedules, see sheets starting at E-401.
2. For other work related to items not shown on this sheet, see Electrical Special Provisions.
3. The girder lighting fixtures are shown diagrammatically.Contractor shall install fixtures at railing posts with a maximum of 8000 mm between fixtures. For types and typical lighting fixture installation details, see sheet E-206.
4. The cable trays are shown diagrammatically. For typical girder cable tray plans and sections, see sheets E-207 and E-208.

REGISTERED PROFESSIONAL ENGINEER SYN YEE CHIN No. 18186 Exp. 09/30/2011 ELECTRICAL STATE OF CALIFORNIA
FOR REVISION ONLY 3

REGISTERED PROFESSIONAL ENGINEER FADI WALIEDDINE No. 11465 Exp. 12/31/2009 ELECTRICAL STATE OF CALIFORNIA
FOR REVISION ONLY 2

REGISTERED PROFESSIONAL ENGINEER MARCELL FUMIO TAKAKI No. E 8651 Exp. 9/30/2008 ELECTRICAL STATE OF CALIFORNIA
FOR REVISION ONLY 1

REQUEST FOR INFORMATION NOT ADDRESSED IN THIS CCO REMAIN IN FORCE

MARK	DATE	DESCRIPTIONS	BY	CH'D	CCO#
3	03/01/11	BASE INTEGRATION	RSB	WB	150
2	03/04/08	BARRIER MODIFICATIONS	TW	RG	44
1	02/19/08	ELECTRICAL MODIFICATIONS	MP EL	RR	42

REVISIONS

CONTRACT CHANGE ORDER NO. 150
SHEET 22 OF 42

THIS PLAN IS ACCURATE FOR ELECTRICAL WORK ONLY.

ALL DIMENSIONS ARE IN METERS UNLESS OTHERWISE SHOWN.

SAS SUPERSTRUCTURE GIRDER EASTBOUND
LIGHTING AND ELECTRICAL SYSTEMS
SCALE 1:200

E-184

DESIGN OVERSIGHT		REVISED BY	DATE REVISED
BEHZAD GOLEMOHAMMADI		DATE 08/02	08/02
CALCULATED/ DESIGNED BY	EDC		
CHECKED BY	CYF		

STATE OF CALIFORNIA - DEPARTMENT OF TRANSPORTATION
Caltrans

DRAFT 1 (03/01/11)

FOR REDUCED PLANS ORIGINAL 0 20 40 60 80
DGN FILE =>04-0120f1 0218R03.dgn
LAST REVISION DATE PLOTTED => 25-FEB-2011

DIST	COUNTY	ROUTE	KILOMETER POST TOTAL PROJECT	SHEET No	TOTAL SHEETS
04	SF	80	13.2/13.9	219 R2	1204

12/19/02
REGISTERED ELECTRICAL ENGINEER DATE

12-6-04
PLANS APPROVAL DATE

REGISTERED PROFESSIONAL ENGINEER JENS ERLINGSSON No. 8249 Exp. 9/30/06 ELECTRICAL STATE OF CALIFORNIA

PB POWER, Inc.
A Parsons Brinckerhoff Company
303 Second St., Suite 700N
San Francisco, CA 94107-1317

The State of California or its officers or agents shall not be responsible for the accuracy or completeness of electronic copies of this plan sheet.

Caltrans now has a web site! To get to the web site, go to http://www.dot.ca.gov

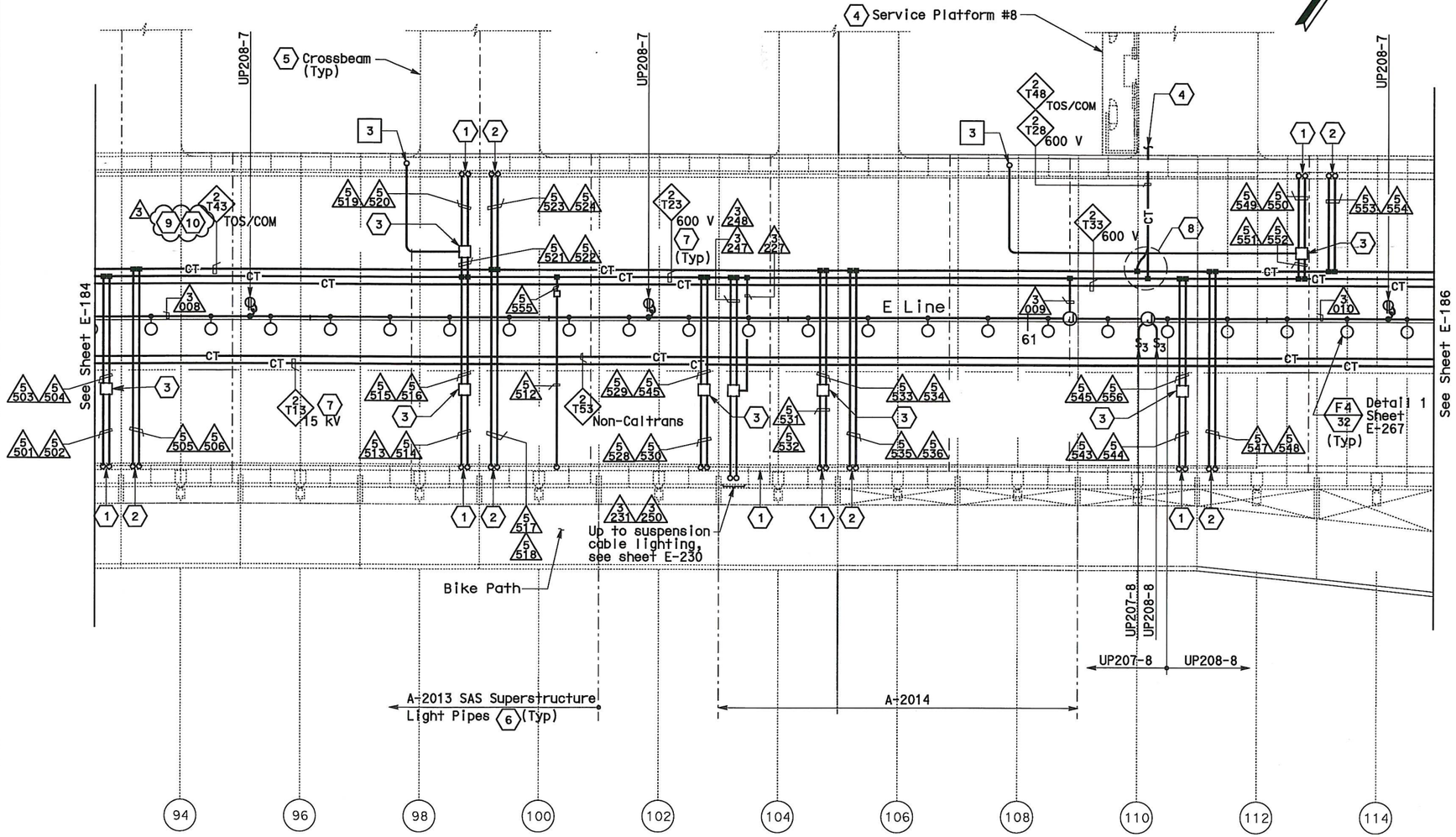

SAS SUPERSTRUCTURE - CONDUIT AND CABLE TRAY PLAN

SHEET NOTES:

1. Conduit up to PB-LTG located in barrier, see sheet E-139.
2. Conduit up to PB-COM located in barrier, see sheet E-139.
3. PB-2A, locate on top of floor.
4. For cable tray run and lighting inside crossbeam, see sheet E-118.
5. For lighting inside crossbeam, see sheet E-119.
6. For future light pipes, see sheets E-202 thru E-204. For light pipe schedule, see sheet E-217.
7. For cable tray & ground bar support, refer to sheet E-208.
8. For fiber splice tray detail, refer to sheet E-355.
9. (2) Furnish and install 1-25.4 mm innerduct per BASE fiber optic cable in TOS/COM cable tray.
10. Furnish and install BASE fiber optic cable in innerduct. See sheet E-1101.

NOTES:

1. References:
   - TOS equipment is shown for conduit routing only. For typical details of TOS controller and devices, see sheets E-344 through E-357.
   - For types of pull boxes, splice boxes and enclosures, see sheet E-169.
   - For bridge grounding plan, see sheet E-196.
   - For circuit and conduit/cable tray schedules, see sheets starting at E-401.
2. For other work related to items not shown on this sheet, see Electrical Special Provisions.
3. The girder lighting fixtures are shown diagrammatically.Contractor shall install fixtures at railing posts with a maximum of 8000 mm between fixtures. For types and typical lighting fixture installation details, see sheet E-206.
4. The cable trays are shown diagrammatically. For typical girder cable tray plans and sections, see sheets E-207 and E-208.

REGISTERED PROFESSIONAL ENGINEER MANUEL FUMIO TAKAKI No. E 8651 Exp. 9/30/2008 ELECTRICAL STATE OF CALIFORNIA

FOR REVISION ONLY (1)

REGISTERED PROFESSIONAL ENGINEER SYN YEE CHIN No. 18186 Exp. 09/30/2011 ELECTRICAL STATE OF CALIFORNIA

FOR REVISION ONLY (2)

REQUEST FOR INFORMATION NOT ADDRESSED IN THIS CCO REMAIN IN FORCE

MARK	DATE	DESCRIPTIONS	BY	CH'D	CCO#
2	03/01/11	BASE INTEGRATION	RSB	WB	150
1	02/19/08	ELECTRICAL MODIFICATIONS	MP EL	RR	42

REVISIONS

CONTRACT CHANGE ORDER NO. 150
SHEET 23 OF 42

THIS PLAN IS ACCURATE FOR ELECTRICAL WORK ONLY.

ALL DIMENSIONS ARE IN METERS UNLESS OTHERWISE SHOWN.

FOR REDUCED PLANS ORIGINAL 0 20 40 60 80

DGN FILE =>04-0120f1 0219R02.dgn

SAS SUPERSTRUCTURE GIRDER EASTBOUND
LIGHTING AND ELECTRICAL SYSTEMS
SCALE 1:200

E-185

DRAFT 1 (03/01/11)

STATE OF CALIFORNIA - DEPARTMENT OF TRANSPORTATION

DESIGN OVERSIGHT: BEHZAD GOLEMOHAMMADI

CALCULATED/ DESIGNED BY	EDC	DATE	REVISED BY
CHECKED BY	CYF	08/02	DATE REVISED

LAST REVISION | DATE PLOTTED => 25-FEB-2011

DIST	COUNTY	ROUTE	KILOMETER POST TOTAL PROJECT	SHEET No	TOTAL SHEETS
04	SF	80	13.2/13.9	220 R3	1204

12/19/02
REGISTERED ELECTRICAL ENGINEER DATE

12-6-04
PLANS APPROVAL DATE

REGISTERED PROFESSIONAL ENGINEER JENS ERLINGSSON No. 8249 Exp. 9/30/06 ELECTRICAL STATE OF CALIFORNIA

PB POWER, Inc.
A Parsons Brinckerhoff Company
303 Second St., Suite 700N
San Francisco, CA 94107-1317

The State of California or its officers or agents shall not be responsible for the accuracy or completeness of electronic copies of this plan sheet.

Caltrans now has a web site! To get to the web site, go to http://www.dot.ca.gov

Caltrans Metric

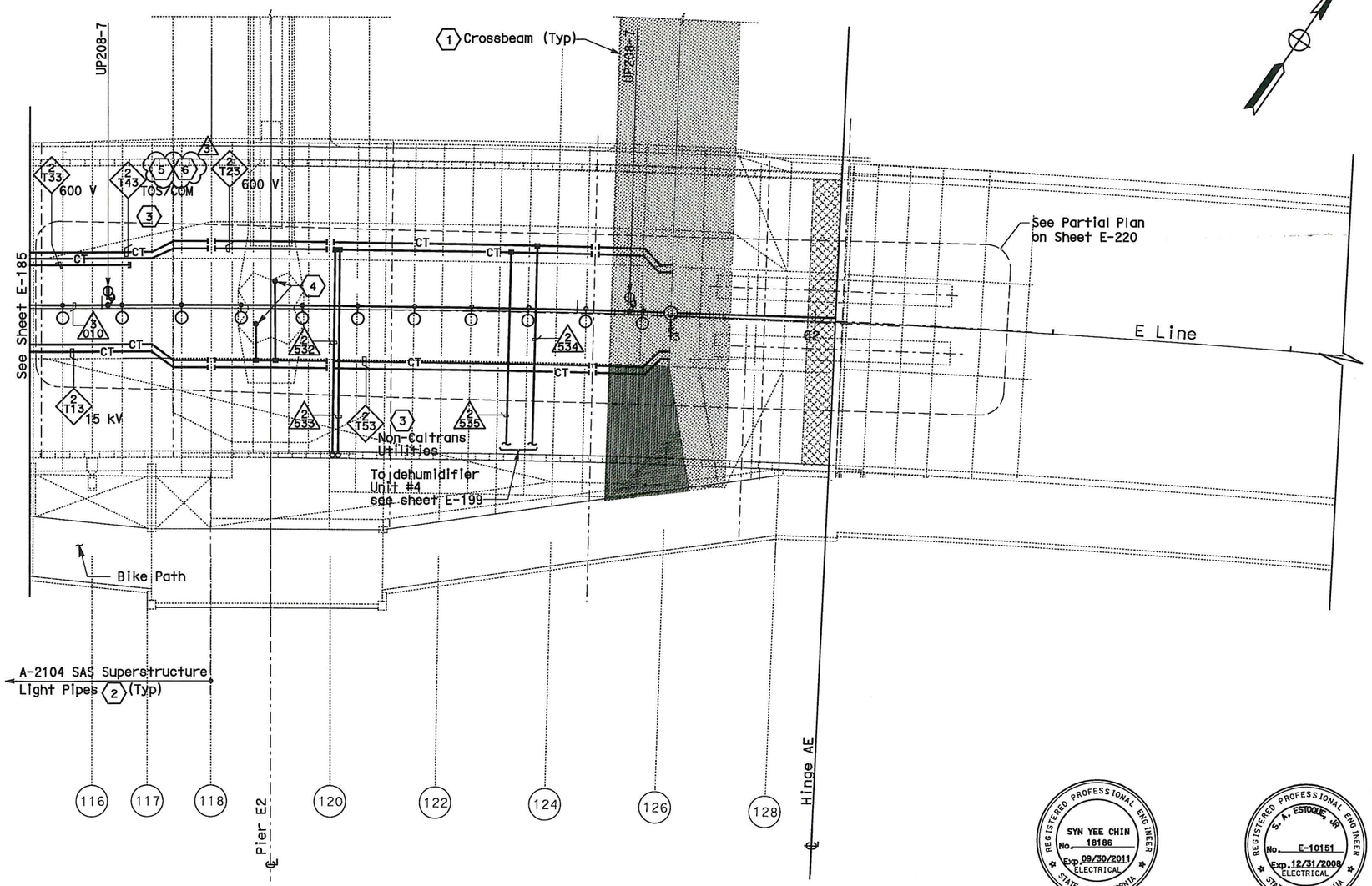

SAS SUPERSTRUCTURE - CONDUIT AND CABLE TRAY PLAN

SHEET NOTES:

1. For lighting inside crossbeam, see sheet E-119.
2. For future light pipes, see sheets E-202 thru E-204. For light pipe schedule, see sheet E-217.
3. For cable tray & ground bar support, refer to sheet E-208.
4. 250 kcmil bare copper grounding conductor exothermically welded to 500 kcmil system ground conductor. See E2/T1 Structures Contract 04-0120E4. For continuation, see sheet E-196.
5. (3) Furnish and install 1-25.4 mm innerduct per BASE fiber optic cable in TOS/COM cable tray.
6. Furnish and install BASE fiber optic cable in innerduct. See sheet E-1101.

NOTES:

1. References:
   - TOS equipment is shown for conduit routing only. For typical details of TOS controller and devices, see sheets E-344 through E-357.
   - For types of pull boxes, splice boxes and enclosures, see sheet E-169.
   - For bridge grounding plan, see sheet E-196.
   - For circuit and conduit/cable tray schedules, see sheets starting at E-401.
2. For other work related to Hinge AE and items not shown on this sheet, see Electrical Special Provisions.
3. The girder lighting fixtures are shown diagrammatically. Contractor shall install fixtures at railing posts with a maximum of 8000 mm between fixtures. For types and typical lighting fixture installation details, see sheet E-206.
4. The cable trays are shown diagrammatically. For typical girder cable tray plans and sections, see sheets E-207 and E-208.

REGISTERED PROFESSIONAL ENGINEER SYN YEE CHIN No. 18186 Exp. 09/30/2011 ELECTRICAL STATE OF CALIFORNIA

Syn Yee Chin
FOR REVISION ONLY
2 3

REGISTERED PROFESSIONAL ENGINEER S. A. ESTOQUE, JR. No. E-10151 Exp. 12/31/2008 ELECTRICAL STATE OF CALIFORNIA

FOR REVISION ONLY
1

REQUEST FOR INFORMATION NOT ADDRESSED IN THIS CCO REMAIN IN FORCE					
3	03/01/11	BASE INTEGRATION	RSB	WB	150
2	03/26/10	DEHUMIDIFIER SCADA INTERFACE	RR	RG FW	130
1	02/25/08	CABLE TRAY CHANGES	JD	RG SE	42S1
MARK	DATE	DESCRIPTIONS	BY	CH'D	CCO#
		REVISIONS			

CONTRACT CHANGE ORDER NO. 150
SHEET 24 OF 42

THIS PLAN IS ACCURATE FOR ELECTRICAL WORK ONLY.

SAS SUPERSTRUCTURE GIRDER EASTBOUND
LIGHTING AND ELECTRICAL SYSTEMS
SCALE 1:200

E-186

ALL DIMENSIONS ARE IN METERS UNLESS OTHERWISE SHOWN.

FOR REDUCED PLANS ORIGINAL 0 20 40 60 80 DGN FILE =>04-0120f1 0220R03.dgn

DRAFT 1 (03/01/11)

STATE OF CALIFORNIA - DEPARTMENT OF TRANSPORTATION
Caltrans

DESIGN OVERSIGHT
BEHZAD GOLEMOHAMMADI

CALCULATED/DESIGNED BY EDC
CHECKED BY CYF

DATE 08/02 REVISED BY
08/02 DATE REVISED

LAST REVISION DATE PLOTTED => 25-FEB-2011

DIST	COUNTY	ROUTE	KILOMETER POST TOTAL PROJECT	SHEET No	TOTAL SHEETS
04	SF	80	13.2/13.9	221 R2	1204

REGISTERED ELECTRICAL ENGINEER 2/6/04 DATE

12-6-04
PLANS APPROVAL DATE

REGISTERED PROFESSIONAL ENGINEER JENS ERLINGSSON No. 8249 Exp. 9/30/06 ELECTRICAL STATE OF CALIFORNIA

PB POWER, Inc.
A Parsons Brinckerhoff Company
303 Second St., Suite 700N
San Francisco, CA 94107-1317

The State of California or its officers or agents shall not be responsible for the accuracy or completeness of electronic copies of this plan sheet.

Caltrans now has a web site! To get to the web site, go to http://www.dot.ca.gov

Caltrans Metric

REGISTERED PROFESSIONAL ENGINEER SYN YEE CHIN No. 18186 Exp. 09/30/2011 ELECTRICAL STATE OF CALIFORNIA
Syn Yee Chin
FOR REVISION ONLY

REGISTERED PROFESSIONAL ENGINEER S. A. ESTOQUE, JR. No. E-10151 Exp. 12/31/2008 ELECTRICAL STATE OF CALIFORNIA
FOR REVISION ONLY

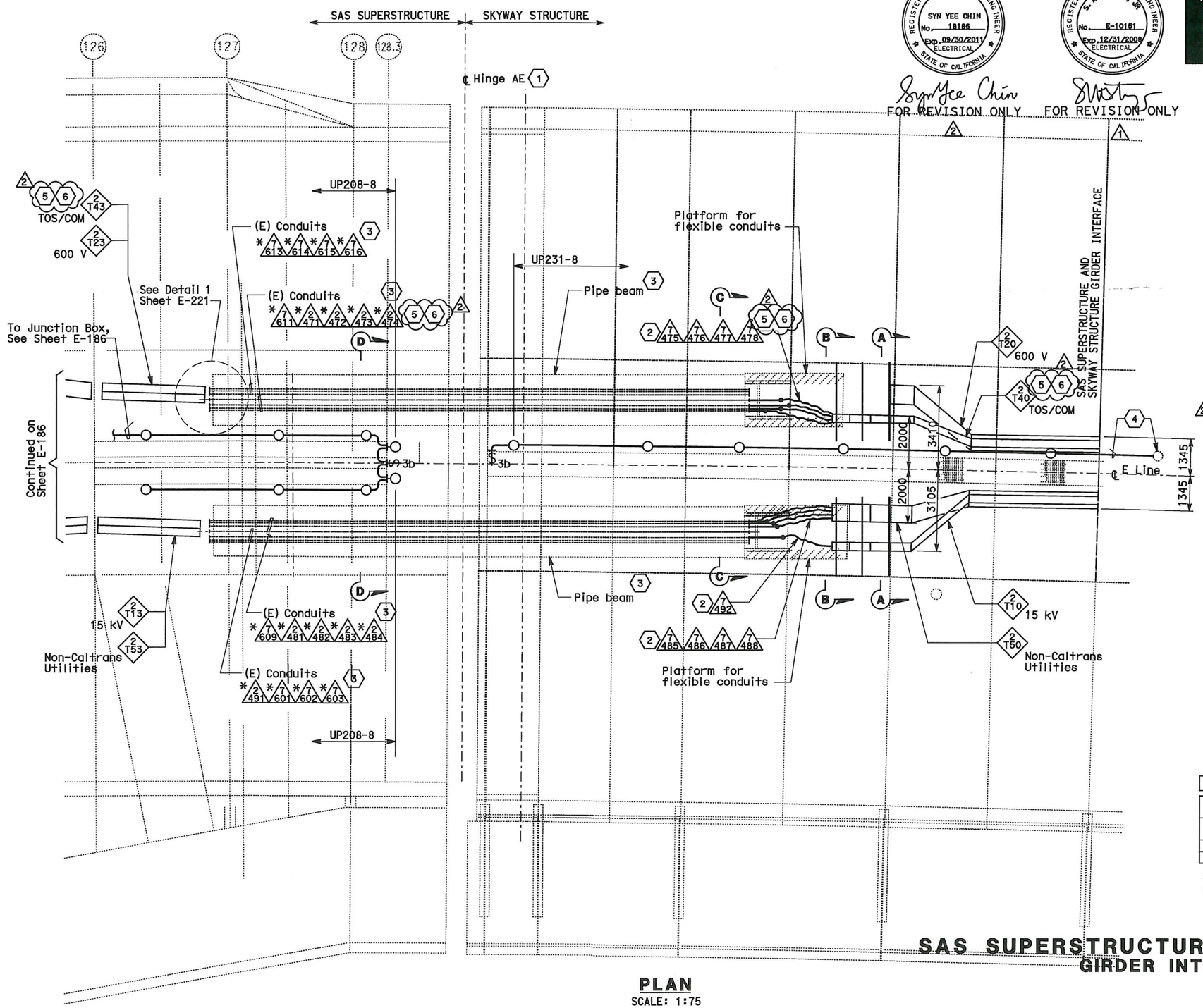

PLAN
SCALE: 1:75

SHEET NOTES:

1. Hinge AE electrical design is based on the maximum expansion joint movement opening of 1243 mm.
2. Arrange and group the flexible 103 mm conduits to maintain a minimum voltage level separation of 460 mm between systems.
3. Existing conduits(*) inside pipe beam are supplied in Skyway contract.
4. Terminate conduit to the next lighting fixture and splice wiring to circuit UP231-8 of Skyway Structure.
5. Furnish and install 4-25.4 mm innerducts inside TOS/COM conduits (*2474, 7478) and 1-25.4 mm innerduct per BASE fiber optic cable in TOS/COM cable tray.
6. Furnish and install BASE fiber optic cable in innerduct inside TOS/COM conduit and cable tray. See sheet E-1101.

NOTES:

1. Minimum radius of cable tray fittings shall be 610 mm.
2. Minimum radius of 103 mm conduits bends shall be 610 mm.
3. Cables/circuits passing through the hinge locations shall be provided with cable identification tag at both ends of Hinge.
4. For additional work related not shown on this drawing, see Electrical Special Provisions.
5. Section A-A and B-B see sheet E-221B.
6. Section C-C and Section D-D, see sheet E-221C.

REQUEST FOR INFORMATION NOT ADDRESSED IN THIS CCO REMAIN IN FORCE

MARK	DATE	DESCRIPTIONS	BY	CH'D	CCO#
2	03/01/11	BASE INTEGRATION	RSB	WB	150
1	02/25/08	CABLE TRAY CHANGES	JD	RG SE	42S1

REVISIONS

CONTRACT CHANGE ORDER NO. 150
SHEET 25 OF 42

SAS SUPERSTRUCTURE AND SKYWAY STRUCTURE GIRDER INTERFACE EASTBOUND
AS NOTED

E-186A

THIS PLAN ACCURATE FOR ELECTRICAL WORK ONLY.

ALL DIMENSIONS ARE IN MILLIMETERS UNLESS OTHERWISE SHOWN.

FOR REDUCED PLANS ORIGINAL 0 20 40 60 80 DGN FILE =>04-0120f1 0221R02.dgn

				EJL	2/04
			REVISED BY	DATE REVISED	
		DATE 12/03	CYF	1/04	EJL
		CALCULATED/ DESIGNED BY		CHECKED BY	

DESIGN OVERSIGHT
BEHZAD GOLEMOHAMMADI

STATE OF CALIFORNIA - DEPARTMENT OF TRANSPORTATION
Caltrans

DRAFT 1 (03/01/11)

LAST REVISION DATE PLOTTED => 25-FEB-2011

DIST	COUNTY	ROUTE	KILOMETER POST TOTAL PROJECT	SHEET No	TOTAL SHEETS
04	SF	80	13.2/13.9	243 R2	1204

REGISTERED ELECTRICAL ENGINEER 2/6/04 DATE

12-6-04
PLANS APPROVAL DATE

REGISTERED PROFESSIONAL ENGINEER JENS ERLINGSSON No. 8249 Exp. 9/30/06 ELECTRICAL STATE OF CALIFORNIA

PB POWER, Inc.
A Parsons Brinckerhoff Company
303 Second St., Suite 700N
San Francisco, CA 94107-1317

The State of California or its officers or agents shall not be responsible for the accuracy or completeness of electronic copies of this plan sheet.

Caltrans now has a web site! To get to the web site, go to http://www.dot.ca.gov

Caltrans Metric

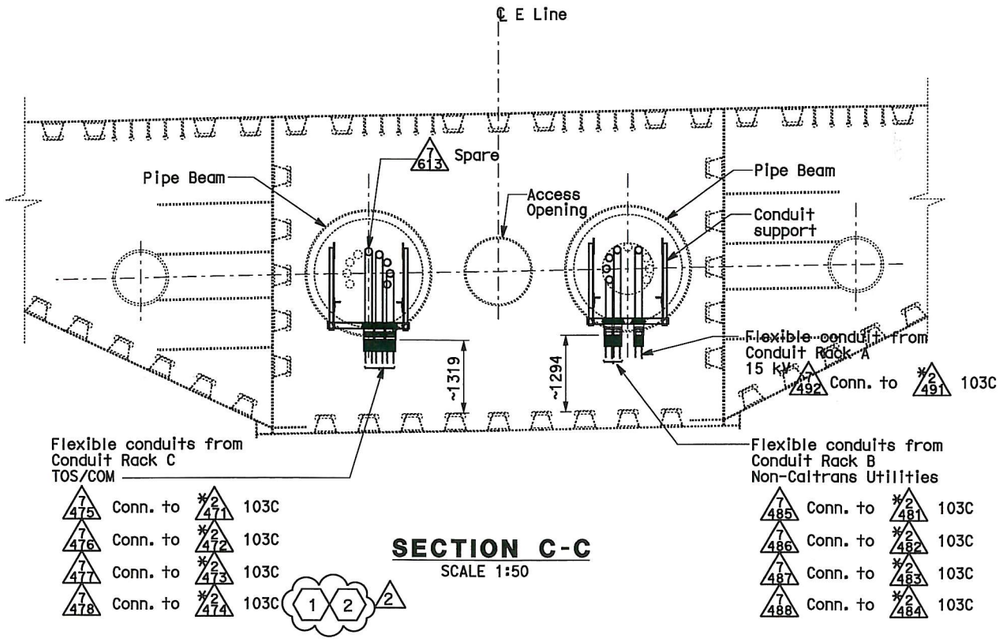

SECTION C-C
SCALE 1:50

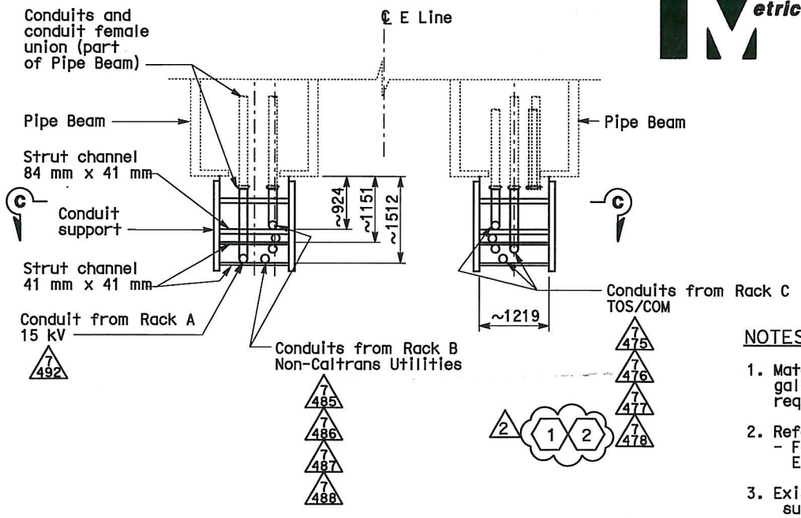

PLAN - DETAIL 1
SCALE 1:50

NOTES:

1. Materials, hardware and fittings shall be galvanized or stainless steel. For additional requirements, see Electrical Special Provisions.
2. References:
   - For Westbound plans and sections, see sheets E-186A and E-221A.
3. Existing conduits (*) inside pipe beam are supplied in Skyway contract.

SHEET NOTES:

2 (1) Furnish and install 4-25.4 mm innerducts inside TOS/COM conduits (*2474, 7478) and 1-25.4 mm innerduct per BASE fiber optic cable in TOS/COM cable tray.

(2) Furnish and install BASE fiber optic cable in innerduct inside TOS/COM conduit and cable tray. See sheet E-1101.

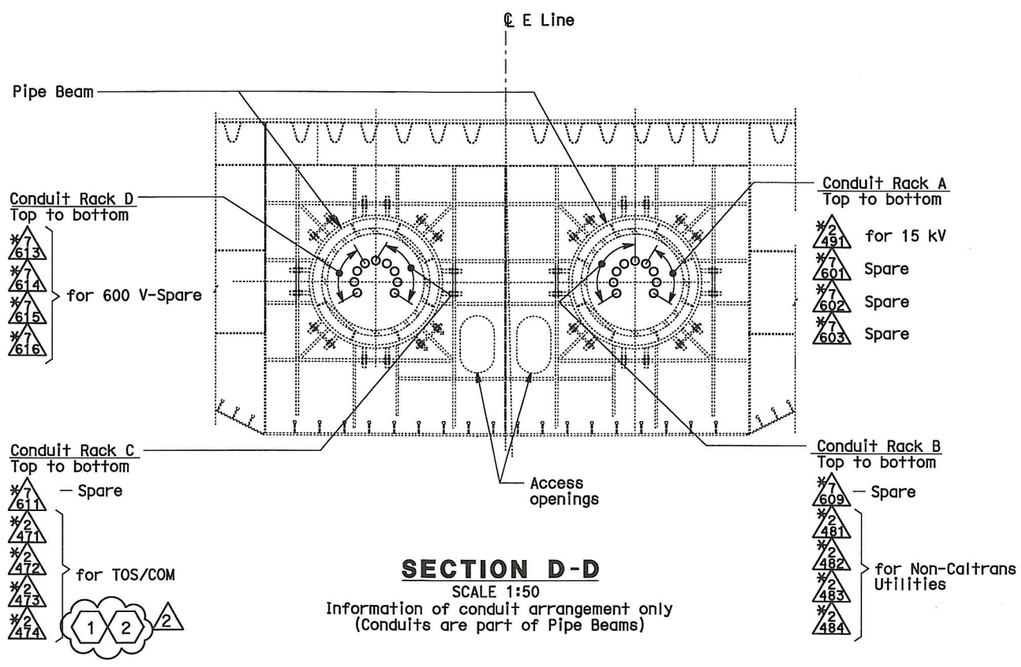

SECTION D-D
SCALE 1:50
Information of conduit arrangement only
(Conduits are part of Pipe Beams)

REGISTERED PROFESSIONAL ENGINEER SYN YEE CHIN No. 18186 Exp. 09/30/2011 ELECTRICAL STATE OF CALIFORNIA
FOR REVISION ONLY 2

REGISTERED PROFESSIONAL ENGINEER S. A. ESTOQUE, JR. No. E-10151 Exp. 12/31/2008 ELECTRICAL STATE OF CALIFORNIA
FOR REVISION ONLY 1

REQUEST FOR INFORMATION NOT ADDRESSED IN THIS CCO REMAIN IN FORCE					
2	03/01/11	BASE INTEGRATION	RSB	WB	150
1	02/25/08	CABLE TRAY CHANGES	JD	RG SE	42S1
MARK	DATE	DESCRIPTIONS	BY	CH'D	CCO#
		REVISIONS			

CONTRACT CHANGE ORDER NO. 150
SHEET 26 OF 42

DETAILS
SAS SUPERSTRUCTURE AND SKYWAY STRUCTURE GIRDER INTERFACE EASTBOUND HINGE AE SUPPORTS
SCALE AS NOTED

E-221C

CALCULATED/DESIGNED BY	CYF	DATE 12/03	REVISED BY EJL
CHECKED BY	EJL	1/04	DATE REVISED 2/04

DESIGN OVERSIGHT
BEHZAD GOLEMOHAMMADI

STATE OF CALIFORNIA - DEPARTMENT OF TRANSPORTATION
Caltrans

THIS PLAN ACCURATE FOR ELECTRICAL WORK ONLY.

ALL DIMENSIONS ARE IN MILLIMETERS UNLESS OTHERWISE SHOWN

FOR REDUCED PLANS ORIGINAL 0 20 40 60 80

DGN FILE =>04-0120f1 0243R02.dgn

LAST REVISION DATE PLOTTED => 28-FEB-2011

DIST	COUNTY	ROUTE	KILOMETER POST TOTAL PROJECT	SHEET No	TOTAL SHEETS
04	SF	80	13.2/13.9	356 R1	1204

REGISTERED ELECTRICAL ENGINEER 12/19/02 DATE

12-6-04
PLANS APPROVAL DATE

REGISTERED PROFESSIONAL ENGINEER JENS ERLINGSSON No. 8249 Exp. 9/30/06 ELECTRICAL STATE OF CALIFORNIA

PB POWER, Inc.
A Parsons Brinckerhoff Company
303 Second St., Suite 700N
San Francisco, CA 94107-1317

The State of California or its officers or agents shall not be responsible for the accuracy or completeness of electronic copies of this plan sheet.

Caltrans now has a web site! To get to the web site, go to http://www.dot.ca.gov

Caltrans Metric

REGISTERED PROFESSIONAL ENGINEER SYN YEE CHIN No. 18186 Exp. 09/30/2011 ELECTRICAL STATE OF CALIFORNIA

1 Syn Yee Chin
FOR REVISION ONLY

REQUEST FOR INFORMATION NOT ADDRESSED IN THIS CCO REMAIN IN FORCE

MARK	DATE	DESCRIPTIONS	BY	CH'D	CCO#
1	03/01/11	BASE INTEGRATION	RSB	WB	150

REVISIONS

CONTRACT CHANGE ORDER NO. 150
SHEET 27 OF 42

CONDUIT DATA

Conduit No	Reference	Size	Type	Total Fill (mm²)	Allowable Fill (mm²)	Included Cable No.	Conductor Type
0550	E-11, E-20	103	RGS conduit	0.00	3324.51	Pull rope	Soft-Fiber Polyester
0551	E-11, E-20	103	RGS conduit	0.00	3324.51	Pull rope	Soft-Fiber Polyester
0552	E-11, E-20	103	RGS conduit	324.29	3324.51	S-3056-1	1-3/C + gnd #6, 600 V, EPR Insulation
						Pull rope	Soft-Fiber Polyester
0553	E-11, E-20	103	RGS conduit	1637.07	3324.51	1117	1-3/C + gnd #2/0 , 600 V, EPR Insulation
						Pull rope	Soft-Fiber Polyester
						1115	1-3/C + gnd #1/0 , 600 V, EPR Insulation
0554	E-11, E-20	103	RGS conduit	1905.83	3324.51	Pull rope	Soft-Fiber Polyester
						1106	1-3/C + gnd #6, 600 V, EPR Insulation
						A-3012-1	1-3/C + gnd #2, 600 V, EPR Insulation
						A-3013-1	1-3/C + gnd #2, 600 V, EPR Insulation
						A-3011-1	1-3/C + gnd #2, 600 V, EPR Insulation
0555	E-11, E-21	103	RGS conduit	1637.53	3324.51	A-3008-1	1-2/C + gnd #8, 600 V, EPR Insulation
						1118	1-3/C + gnd #2/0 ,600 V, EPR Insulation
						Pull rope	Soft-Fiber Polyester
						A-2012-1	1-3/C + gnd #2, 600 V, EPR Insulation
0556	E-11, E-21	103	RGS conduit	3163.08	3324.51	2099	1-3/C + gnd #2, 600 V, EPR Insulation
						2096	1-3/C + gnd #2, 600 V, EPR Insulation
						Pull rope	Soft-Fiber Polyester
						2095	1-3/C + gnd #2, 600 V, EPR Insulation
						A-2013-1	1-3/C + gnd #2, 600 V, EPR Insulation
						2097	1-3/C + gnd #2, 600 V, EPR Insulation
						2098	1-3/C + gnd #2, 600 V, EPR Insulation
0557	E-11, E-21	103	RGS conduit	2635.90	3324.51	Pull rope	Soft-Fiber Polyester
						S-3053-1	1-3/C + gnd #2, 600 V, EPR Insulation
						S-3052-1	1-3/C + gnd #2, 600 V, EPR Insulation
						A-3042-1	1-3/C + gnd #2, 600 V, EPR Insulation
						A-2011-1	1-3/C + gnd #2, 600 V, EPR Insulation
						A-2014-1	1-3/C + gnd #2, 600 V, EPR Insulation
0558	E-11, E-21	103	RGS conduit	1581.54	3324.51	Pull rope	Soft-Fiber Polyester
						A-3040-1	1-3/C + gnd #2, 600 V, EPR Insulation
						A-3057-1	1-3/C + gnd #2, 600 V, EPR Insulation
						A-3039-1	1-3/C + gnd #2, 600 V, EPR Insulation
0559	E-11, E-21	103	RGS conduit	0.00	3324.51	Pull rope	Soft-Fiber Polyester
0560	E-11, E-20	103	RGS conduit	3503.08	4404.97	1479-1	72 Fiber, single mode fiber optic riser cable inside brown innerduct
						1 1481-2	12 Fiber, single mode fiber optic cable inside white innerduct
						Black Innerduct	25.4 mm Smoothwall black innerduct
						Blue Innerduct	25.4 mm Smoothwall blue innerduct
0561	E-11, E-20	103	RGS conduit	0.00	3324.51	Pull rope	Soft-Fiber Polyester
0562	E-11, E-20	103	RGS conduit	0.00	3324.51	Pull rope	Soft-Fiber Polyester
0563	E-11, E-20	103	RGS conduit	2960.19	3324.51	1098	1-3/C + gnd #2, 600 V, EPR Insulation
						Pull rope	Soft-Fiber Polyester
						1095	1-3/C + gnd #2, 600 V, EPR Insulation
						1096	1-3/C + gnd #2, 600 V, EPR Insulation
						1097	1-3/C + gnd #2, 600 V, EPR Insulation
						1099	1-3/C + gnd #2, 600 V, EPR Insulation
						A-1035-1	1-3/C + gnd #6, 600 V, EPR Insulation
0564	E-11, E-20	103	RGS conduit	2108.72	3324.51	A-1014-1	1-3/C + gnd #2, 600 V, EPR Insulation
						Pull rope	Soft-Fiber Polyester
						A-1012-1	1-3/C + gnd #2, 600 V, EPR Insulation
						A-1013-1	1-3/C + gnd #2, 600 V, EPR Insulation
						A-1011-1	1-3/C + gnd #2, 600 V, EPR Insulation
0565	E-11, E-20	103	RGS conduit	0.00	3324.51	Pull rope	Soft-Fiber Polyester
0566	E-11, E-20	103	RGS conduit	0.00	3324.51	Pull rope	Soft-Fiber Polyester
0567	E-11, E-20	103	RGS conduit	0.00	3324.51	Pull rope	Soft-Fiber Polyester
0568	E-11, E-21	103	RGS conduit	1217.57	3324.51	S-2031-1	1-3/C + gnd #2, 600 V, EPR Insulation
						S-2032-1	1-3/C + gnd #4, 600 V, EPR Insulation
						A-2035-1	1-3/C + gnd #6 , 600 V, EPR Insulation
						Pull rope	Soft-Fiber Polyester

CONDUIT DATA

Conduit No	Reference	Size	Type	Total Fill (mm²)	Allowable Fill (mm²)	Included Cable No.	Conductor Type
0569	E-11, E-21	103	RGS conduit	1947.64	3324.51	A-3009-1	1-3/C + gnd #2, 600 V, EPR Insulation
						S-1032-1	1-3/C + gnd #4, 600 V, EPR Insulation
						A-3010-1	1-3/C + gnd #2, 600 V, EPR Insulation
						S-1031-1	1-3/C + gnd #2, 600 V, EPR Insulation
						Pull rope	Soft-Fiber Polyester
0570	E-11, E-21	103	RGS conduit	2635.90	3324.51	2106	1-3/C + gnd #2, 600 V, EPR Insulation
						2107	1-3/C + gnd #2, 600 V, EPR Insulation
						2105	1-3/C + gnd #2, 600 V, EPR Insulation
						2104	1-3/C + gnd #2, 600 V, EPR Insulation
						2103	1-3/C + gnd #2, 600 V, EPR Insulation
						Pull rope	Soft-Fiber Polyester
0571	E-11, E-21	103	RGS conduit	2518.76	3324.51	A-3031-1	1-3/C + gnd #4, 600 V, EPR Insulation
						A-3032-1	1-3/C + gnd #4, 600 V, EPR Insulation
						A-3033-1	1-3/C + gnd #2, 600 V, EPR Insulation
						A-3034-1	1-3/C + gnd #2, 600 V, EPR Insulation
						A-3035-1	1-3/C + gnd #4, 600 V, EPR Insulation
						A-3036-1	1-3/C + gnd #4, 600 V, EPR Insulation
						Pull rope	Soft-Fiber Polyester
0572	E-11, E-21	103	RGS conduit	323.65	3324.51	2475-3	72 Fiber, single mode fiberoptic riser cable
						Pull rope	Soft-Fiber Polyester
0573	E-11, E-20	103	RGS conduit	0.00	3324.51	Pull rope	Soft-Fiber Polyester
0574	E-11, E-20	103	RGS conduit	0.00	3324.51	Pull rope	Soft-Fiber Polyester
0575	E-11, E-20	103	RGS conduit	2780.99	3324.51	Pull rope	Soft-Fiber Polyester
						1391	3-1/C #4/0 + 1/C#1/0 gnd, 15 kV, EPR Insulation
0576	E-11, E-20	103	RGS conduit	2152.66	3324.51	Pull rope	Soft-Fiber Polyester
						A-3002-1	1-3/C + gnd #4, 600 V, EPR Insulation
						A-3005-1	1-3/C + gnd #2, 600 V, EPR Insulation
						A-3004-1	1-3/C + gnd #2, 600 V, EPR Insulation
						A-3003-1	1-3/C + gnd #4, 600 V, EPR Insulation
						A-3001-1	1-3/C + gnd #4, 600 V, EPR Insulation
0577	E-11, E-20	103	RGS conduit	0.00	3324.51	Pull rope	Soft-Fiber Polyester
0578	E-11, E-20	103	RGS conduit	0.00	3324.51	Pull rope	Soft-Fiber Polyester
0579	E-11, E-20	103	RGS conduit	0.00	3324.51	Pull rope	Soft-Fiber Polyester
0580	E-11, E-20	103	RGS conduit	0.00	3324.51	Pull rope	Soft-Fiber Polyester
0581	E-11, E-21	103	RGS conduit	2820.14	3324.51	A-3041-1	1-3/C + gnd #2, 600 V, EPR Insulation
						2123-3	1-3/C + gnd #2/0, 600 V, EPR Insulation
						2123-2	1-3/C + gnd #2/0, 600 V, EPR Insulation
						2123	1-3/C + gnd #2, 600 V, EPR Insulation
						Pull rope	Soft-Fiber Polyester
0582	E-11, E-21	103	RGS conduit	3138.60	3324.51	Pull rope	Soft-Fiber Polyester
						2119-B	1-3/C + gnd 250 kcmil, 600 V, EPR Insulation
						2119-A	1-3/C + gnd 250 kcmil, 600 V, EPR Insulation

For continuation, see next sheet.

CONDUIT AND TRAY SCHEDULE

E-401

DRAFT 1 (03/01/11)

STATE OF CALIFORNIA - DEPARTMENT OF TRANSPORTATION
Caltrans

DESIGN OVERSIGHT
BEHZAD GOLEMOHAMMADI

CALCULATED/DESIGNED BY PBP
CHECKED BY AB
DATE REVISED 8/02
REVISED BY DATE REVISED

LAST REVISION DATE PLOTTED => 25-FEB-2011

FOR REDUCED PLANS ORIGINAL 0 20 40 60 80 DGN FILE =>04-0120f1 0356R01.dgn

CONDUIT DATA

Conduit No	Reference	Size	Type	Total Fill (mm²)	Allowable Fill (mm²)	Included Cable No.	Conductor Type
0700	E-20, E20B	103	Liquidtight flex metal conduit		3275.44	Pull rope	Soft-Fiber Polyester
0701	E-20, E20B	103	Liquidtight flex metal conduit		3275.44	Pull rope	Soft-Fiber Polyester
0702	E-20, E20B	103	Liquidtight flex metal conduit		3275.44	Pull rope	Soft-Fiber Polyester
0703	E-20, E20B	103	Liquidtight flex metal conduit		3275.44	Pull rope	Soft-Fiber Polyester
0704	E-20, E20B	103	Liquidtight flex metal conduit		3275.44	Pull rope	Soft-Fiber Polyester
0705	E-20, E20B	103	Liquidtight flex metal conduit		3275.44	Pull rope	Soft-Fiber Polyester
0706	E-20, E20B	103	Liquidtight flex metal conduit		3275.44	Pull rope	Soft-Fiber Polyester
0707	E-20, E20B	103	Liquidtight flex metal conduit		3275.44	Pull rope	Soft-Fiber Polyester
0708	E-20, E20B	103	Liquidtight flex metal conduit		3275.44	Pull rope	Soft-Fiber Polyester
0709	E-20, E20B	103	Liquidtight flex metal conduit	3503.08	4404.97	1479-1	72 Fiber, single mode fiber optic riser cable inside brown innerduct
			2			1481-2	12 Fiber, single mode fiber optic cable inside white innerduct
						Black Innerduct	25.4 mm Smoothwall black innerduct
						Blue Innerduct	25.4 mm Smoothwall blue innerduct
0710	E-20, E20B	103	Liquidtight flex metal conduit		3275.44	Pull rope	Soft-Fiber Polyester
0711	E-20, E20B	103	Liquidtight flex metal conduit		3275.44	Pull rope	Soft-Fiber Polyester
0712	E-20, E20B	103	Liquidtight flex metal conduit	1637.07	3275.44	Pull rope	Soft-Fiber Polyester
						1115	1-3/C + gnd #1/0, 600 V, EPR Insulation
						1117	1-3/C + gnd #2/0, 600 V, EPR Insulation
0713	E-20, E20B	103	Liquidtight flex metal conduit		3275.44	Pull rope	Soft-Fiber Polyester
0714	E-20, E20B	103	Liquidtight flex metal conduit		3275.44	Pull rope	Soft-Fiber Polyester
0715	E-20, E20B	103	Liquidtight flex metal conduit		3275.44	Pull rope	Soft-Fiber Polyester
0716	E-20, E20B	103	Liquidtight flex metal conduit		3275.44	Pull rope	Soft-Fiber Polyester
0717	E-20, E20B	103	Liquidtight flex metal conduit		3275.44	Pull rope	Soft-Fiber Polyester
0718	E-20, E20B	103	Liquidtight flex metal conduit		3275.44	Pull rope	Soft-Fiber Polyester
0719	E-20, E20B	103	Liquidtight flex metal conduit		3275.44	Pull rope	Soft-Fiber Polyester
0720	E-20, E20B	103	Liquidtight flex metal conduit		3275.44	Pull rope	Soft-Fiber Polyester
0721A	E-126A	103	RGS Conduit (Pipe Sleeve)		3324.51	Pull rope	Soft-Fiber Polyester
0722A	E-126A	103	RGS Conduit (Pipe Sleeve)		3324.51	Pull rope	Soft-Fiber Polyester
0722B	E-126A	103	RGS Conduit (Pipe Sleeve)		3324.51	Pull rope	Soft-Fiber Polyester
0722C	E-126A	103	RGS Conduit (Pipe Sleeve)		3324.51	Pull rope	Soft-Fiber Polyester
0722D	E-126A	103	RGS Conduit (Pipe Sleeve)		3324.51	Pull rope	Soft-Fiber Polyester

REQUEST FOR INFORMATION NOT ADDRESSED IN THIS CCO REMAIN IN FORCE

MARK	DATE	DESCRIPTIONS	BY	CH'D	CCO#
2	03/01/11	BASE INTEGRATION	RSB	WB	150
1	03/26/10	DEHUMIDIFIER SCADA INTERFACE	TW	RG SYC	130
0	02/25/08	CABLE TRAY CHANGES	RR TW	RG	42S1

REVISIONS

CONTRACT CHANGE ORDER NO. 150
SHEET 28 OF 42

Caltrans Metric

REGISTERED PROFESSIONAL ENGINEER SYN YEE CHIN No. 18186 Exp. 09/30/2011 ELECTRICAL STATE OF CALIFORNIA

Syn Yee Chin
FOR REVISION ONLY
1 2

DIST	COUNTY	ROUTE	KILOMETER POST TOTAL PROJECT	SHEET No	TOTAL SHEETS
04	SF	80	13.2/13.9	357 S1R2	1204

REGISTERED ELECTRICAL ENGINEER 2/22/08 DATE

REGISTERED PROFESSIONAL ENGINEER S. A. ESTOQUE, JR. No. E-10151 Exp. 12/31/2008 ELECTRICAL STATE OF CALIFORNIA

PLANS APPROVAL DATE

PB AMERICAS, Inc.
A Parsons Brinckerhoff Company
303 Second St., Suite 700N
San Francisco, CA 94107-1317

The State of California or its officers or agents shall not be responsible for the accuracy or completeness of electronic copies of this plan sheet.

Caltrans now has a web site! To get to the web site, go to http://www.dot.ca.gov

CONDUIT DATA

Conduit No	Reference	Size	Type	Total Fill (mm²)	Allowable Fill (mm²)	Included Cable No.	Conductor Type
0723A	E-126A	103	RGS Conduit (Pipe Sleeve)	98.10	3324.51	Pull rope	Soft-Fiber Polyester
						1115-1	1-2PR #18 twisted shielded w/overall shield
0723B	E-126A	103	RGS Conduit (Pipe Sleeve)		3324.51	Pull rope	Soft-Fiber Polyester
0723C	E-126A	103	RGS Conduit (Pipe Sleeve)		3324.51	Pull rope	Soft-Fiber Polyester
0723D	E-126A	103	RGS Conduit (Pipe Sleeve)	3503.08	4404.97	1479-1	72 Fiber, single mode fiber optic riser cable inside brown innerduct
			2			1481-2	12 Fiber, single mode fiber optic cable inside white innerduct
						Black Innerduct	25.4 mm Smoothwall black innerduct
						Blue Innerduct	25.4 mm Smoothwall blue innerduct
0724A	E-126A	103	RGS Conduit (Pipe Sleeve)		3324.51	Pull rope	Soft-Fiber Polyester
0724B	E-126A	103	RGS Conduit (Pipe Sleeve)		3324.51	Pull rope	Soft-Fiber Polyester
0724C	E-126A	103	RGS Conduit (Pipe Sleeve)		3324.51	Pull rope	Soft-Fiber Polyester
0724D	E-126A	103	RGS Conduit (Pipe Sleeve)		3324.51	Pull rope	Soft-Fiber Polyester
0724E	E-126A	103	RGS Conduit (Pipe Sleeve)	882.89	3324.51	Pull rope	Soft-Fiber Polyester
						1117	1-3/C + gnd #2/0, 600 V, EPR Insulation
0724F	E-126A	103	RGS Conduit (Pipe Sleeve)		3324.51	Pull rope	Soft-Fiber Polyester

CONDUIT AND TRAY SCHEDULE

E-402A

DRAFT 1 (03/01/11)

STATE OF CALIFORNIA - DEPARTMENT OF TRANSPORTATION

Caltrans

DESIGN OVERSIGHT
BEHZAD GOLEMOHAMMADI

CALCULATED/DESIGNED BY
CHECKED BY

DATE REVISED BY
DATE REVISED

LAST REVISION DATE PLOTTED => 25-FEB-2011

DGN FILE =>04-0120f1 0357S01R02.dgn

FOR REDUCED PLANS ORIGINAL 0 20 40 60 80

DIST	COUNTY	ROUTE	KILOMETER POST TOTAL PROJECT	SHEET No	TOTAL SHEETS
04	SF	80	13.2/13.9	357 S2R2	1204

REGISTERED ELECTRICAL ENGINEER 2/22/08 DATE

PLANS APPROVAL DATE

REGISTERED PROFESSIONAL ENGINEER S. A. ESTOQUE, JR. No. E-10151 Exp. 12/31/2008 ELECTRICAL STATE OF CALIFORNIA

PB AMERICAS, Inc.
A Parsons Brinckerhoff Company
303 Second St., Suite 700N
San Francisco, CA 94107-1317

The State of California or its officers or agents shall not be responsible for the accuracy or completeness of electronic copies of this plan sheet.

Caltrans now has a web site! To get to the web site, go to http://www.dot.ca.gov

Caltrans Metric

REQUEST FOR INFORMATION NOT ADDRESSED IN THIS CCO REMAIN IN FORCE

MARK	DATE	DESCRIPTIONS	BY	CH'D	CCO#
2	03/01/11	BASE INTEGRATION	RSB	WB	150
1	03/26/10	DEHUMIDIFIER SCADA INTERFACE	TW	RG SYC	130
0	02/25/08	CABLE TRAY CHANGES	RR TW	RG	42S1

REVISIONS

CONTRACT CHANGE ORDER NO. 150
SHEET 29 OF 42

REGISTERED PROFESSIONAL ENGINEER SYN YEE CHIN No. 18186 Exp. 09/30/2011 ELECTRICAL STATE OF CALIFORNIA

1 2

Syn Yee Chin
FOR REVISION ONLY

CONDUIT DATA

Conduit No	Reference	Size	Type	Total Fill (mm2)	Allowable Fill (mm2)	Included Cable No.	Conductor Type
0725A	E-126A	103	RGS Conduit (Pipe Sleeve)		3324.51	Pull rope	Soft-Fiber Polyester
0725B	E-126A	103	RGS Conduit (Pipe Sleeve)		3324.51	Pull rope	Soft-Fiber Polyester
0725C	E-126A	103	RGS Conduit (Pipe Sleeve)		3324.51	Pull rope	Soft-Fiber Polyester
0725D	E-126A	103	RGS Conduit (Pipe Sleeve)		3324.51	Pull rope	Soft-Fiber Polyester
0725E	E-126A	103	RGS Conduit (Pipe Sleeve)		3324.51	Pull rope	Soft-Fiber Polyester
0725F	E-126A	103	RGS Conduit (Pipe Sleeve)		3324.51	Pull rope	Soft-Fiber Polyester
0731A	E-126, E-126A	103	Liquidtight flex metal conduit		3275.44	Pull rope	Soft-Fiber Polyester
0732A	E-126, E-126A	103	Liquidtight flex metal conduit		3275.44	Pull rope	Soft-Fiber Polyester
0732B	E-126, E-126A	103	Liquidtight flex metal conduit		3275.44	Pull rope	Soft-Fiber Polyester
0732C	E-126, E-126A	103	Liquidtight flex metal conduit		3275.44	Pull rope	Soft-Fiber Polyester
0732D	E-126, E-126A	103	Liquidtight flex metal conduit		3275.44	Pull rope	Soft-Fiber Polyester
0733A	E-126, E-126A	103	Liquidtight flex metal conduit	98.10	3275.44	Pull rope	Soft-Fiber Polyester
						1115-1	1-2PR #18 twisted shielded w/overall shield
0733B	E-126, E-126A	103	Liquidtight flex metal conduit		3275.44	Pull rope	Soft-Fiber Polyester
0733C	E-126, E-126A	103	Liquidtight flex metal conduit		3275.44	Pull rope	Soft-Fiber Polyester
0733D	E-126, E-126A	103	Liquidtight flex metal conduit	3503.08	4404.97	1479-1	72 Fiber, single mode fiber optic riser cable inside brown innerduct
			2			1481-2	12 Fiber, single mode fiber optic cable inside white innerduct
						Black Innerduct	25.4 mm Smoothwall black innerduct
						Blue Innerduct	25.4 mm Smoothwall blue innerduct
0734A	E-126, E-126A	103	Liquidtight flex metal conduit		3275.44	Pull rope	Soft-Fiber Polyester
0734B	E-126, E-126A	103	Liquidtight flex metal conduit		3275.44	Pull rope	Soft-Fiber Polyester
0734C	E-126, E-126A	103	Liquidtight flex metal conduit		3275.44	Pull rope	Soft-Fiber Polyester
0734D	E-126, E-126A	103	Liquidtight flex metal conduit		3275.44	Pull rope	Soft-Fiber Polyester
0734E	E-126, E-126A	103	Liquidtight flex metal conduit	882.89	3275.44	Pull rope	Soft-Fiber Polyester
						1117	1-3/C + gnd #2/0, 600 V, EPR insulation
0734F	E-126, E-126A	103	Liquidtight flex metal conduit		3275.44	Pull rope	Soft-Fiber Polyester
0735A	E-126, E-126A	103	Liquidtight flex metal conduit		3275.44	Pull rope	Soft-Fiber Polyester
0735B	E-126, E-126A	103	Liquidtight flex metal conduit		3275.44	Pull rope	Soft-Fiber Polyester
0735C	E-126, E-126A	103	Liquidtight flex metal conduit		3275.44	Pull rope	Soft-Fiber Polyester
0735D	E-126, E-126A	103	Liquidtight flex metal conduit		3275.44	Pull rope	Soft-Fiber Polyester
0735E	E-126, E-126A	103	Liquidtight flex metal conduit		3275.44	Pull rope	Soft-Fiber Polyester
0735F	E-126, E-126A	103	Liquidtight flex metal conduit		3275.44	Pull rope	Soft-Fiber Polyester

CONDUIT DATA

Conduit No	Reference	Size	Type	Total Fill (mm2)	Allowable Fill (mm2)	Included Cable No.	Conductor Type

CONDUIT AND TRAY SCHEDULE

E-402B

DATE	REVISED BY	DATE REVISED

CALCULATED/DESIGNED BY
CHECKED BY

DESIGN OVERSIGHT
BEHZAD GOLEMOHAMMADI

STATE OF CALIFORNIA - DEPARTMENT OF TRANSPORTATION
Caltrans

DRAFT 1 (03/01/11)

LAST REVISION DATE PLOTTED => 28-FEB-2011

FOR REDUCED PLANS ORIGINAL 0 20 40 60 80 DGN FILE =>04-0170f1 0357S02R02.dgn

CONDUIT DATA

Conduit No	Reference	Size	Type	Total Fill (mm2)	Allowable Fill (mm2)	Included Cable No.	Conductor Type
1T33	E-114B	610	152.4 mm siderail ladder tray	7720.94	18064.48	UP104-8	1-2/C + gnd #8, 600 V, EPR Insulation
						UP108-12	1-2/C + gnd #8, 600 V, EPR Insulation
						UP108-9	1-2/C + gnd #8, 600 V, EPR Insulation
						A-1011-1	1-3/C + gnd #2, 600 V, EPR Insulation
						A-1012-1	1-3/C + gnd #2, 600 V, EPR Insulation
						UP104-3	1-2/C + gnd #10, 600 V, EPR Insulation
						UP107-3	1-2/C + gnd #8, 600 V, EPR Insulation
						UP105-9	1-2/C + gnd #8, 600 V, EPR Insulation
						UP104-9	1-2/C + gnd #10, 600 V, EPR Insulation
						Pull rope	Soft-Fiber Polyester
						UP108-4	1-2/C + gnd #8, 600 V, EPR Insulation
						UP108-2	1-2/C + gnd #8, 600 V, EPR Insulation
						UP108-7	1-2/C + gnd #8, 600 V, EPR Insulation
						UP107-7	1-2/C + gnd #8, 600 V, EPR Insulation
						UP106-7	1-2/C + gnd #8, 600 V, EPR Insulation
						UP105-7	1-2/C + gnd #8, 600 V, EPR Insulation
						A-1013-1	1-3/C + gnd #2, 600 V, EPR Insulation
						UP107-9	1-2/C + gnd #8, 600 V, EPR Insulation
						A-1014-1	1-3/C + gnd #2, 600 V, EPR Insulation
						UP106-3	1-2/C + gnd #8, 600 V, EPR Insulation
						UP105-3	1-2/C + gnd #10, 600 V, EPR Insulation
						UP106-6	1-2/C + gnd #8, 600 V, EPR Insulation
						UP105-10	1-2/C + gnd #8, 600 V, EPR Insulation
						UP104-6	1-2/C + gnd #8, 600 V, EPR Insulation
						UP107-8	1-2/C + gnd #8, 600 V, EPR Insulation
						UP106-8	1-2/C + gnd #8, 600 V, EPR Insulation
						UP105-8	1-2/C + gnd #8, 600 V, EPR Insulation
						UP104-7	1-2/C + gnd #8, 600 V, EPR Insulation
						UP108-8	1-2/C + gnd #8, 600 V, EPR Insulation
						UP106-9	1-2/C + gnd #8, 600 V, EPR Insulation
						UP108-10	1-2/C + gnd #8, 600 V, EPR Insulation
1T39	E-20B, E-126	610	152.4 mm siderail ladder tray	1054.36	18064.48	A-1011-1	1-3/C + gnd #2, 600 V, EPR Insulation
						A-1014-1	1-3/C + gnd #2, 600 V, EPR Insulation
						Pull rope	Soft-Fiber Polyester
1T43	E-114B	610	152.4 mm siderail solid bottom tray	13605.16 △5	38709.60	MVDSW04A	MVDS DLC
						1144	1 - 2 pair, shielded #18 with IS/OA , 300 V, PVC Jacket
						1475-3C	12 Fiber, single mode fiberoptic cable
						1475-3A	12 Fiber, single mode fiberoptic cable
						1474-4	50 pair #18, shielded pairs, IS/OS shield 600 V, XLPE Insul., PVC Jacket
						1145	1 - 2 pair, shielded #18 with IS/OA , 300 V, PVC Jacket
						1474-5	50 pair #18, shielded pairs, IS/OS shield 600 V, XLPE Insul., PVC Jacket
						1474-7	50 pair #18, shielded pairs, IS/OS shield 600 V, XLPE Insul., PVC Jacket
						1477-2	72 Fiber, single mode fiberoptic riser cable
						1475-3	72 Fiber, single mode fiberoptic riser cable
						MVDSW02A	MVDS DLC
						1115-1	1-2PR #18 Twisted Shielded w/overall shield
						1117-1	1-2PR #18 Twisted Shielded w/overall shield
						1475-3B	12 Fiber, single mode fiberoptic cable
						2900-472B	4 pair #22, shielded pairs, FEP Insulation
						2900-182A	4 pair #22, shielded pairs, FEP Insulation
						2900-182B	4 pair #22, shielded pairs, FEP Insulation
						2900-202A	4 pair #22, shielded pairs, FEP Insulation
						2900-282A	4 pair #22, shielded pairs, FEP Insulation
						2900-342A	4 pair #22, shielded pairs, FEP Insulation
						2900-392A	4 pair #22, shielded pairs, FEP Insulation
						2900-462A	4 pair #22, shielded pairs, FEP Insulation
						2900-472A	4 pair #22, shielded pairs, FEP Insulation
						Pull rope	Soft-Fiber Polyester
						2900-472C	4 pair #22, shielded pairs, FEP Insulation
						1474-8	50 pair #18, shielded pairs, IS/OS shield 600 V, XLPE Insul., PVC Jacket
						1473-5	50 pair #18, shielded pairs, IS/OS shield 600 V, XLPE Insul., PVC Jacket
						1473-7	50 pair #18, shielded pairs, IS/OS shield 600 V, XLPE Insul., PVC Jacket
						1473-10	50 pair #18, shielded pairs, IS/OS shield 600V, XLPE Insul., PVC Jacket
						1474-10	50 pair #18, shielded pairs, IS/OS shield 600 V, XLPE Insul., PVC Jacket
						2900-462B	4 pair #22, shielded pairs, FEP Insulation
						△5 1479-1	72 Fiber, single mode fiber optic riser cable inside brown innerduct
						1479-2	72 Fiber, single mode fiber optic riser cable inside brown innerduct
						1481-2	12 Fiber, single mode fiber optic cable inside brown innerduct

REQUEST FOR INFORMATION NOT ADDRESSED IN THIS CCO REMAIN IN FORCE

MARK	DATE	DESCRIPTIONS	BY	CH'D	CCO#
5	03/01/11	BASE INTEGRATION	RSB	WB	150
4	03/26/10	DEHUMIDIFIER SCADA INTERFACE	RR	RG FW	130
3	03/30/09	SERVICE PLATFORM ELECTRICAL CHANGES	RY RR	RG MP	55
2	02/25/08	CABLE TRAY CHANGES	RR TW	RG	42S1
1	03/04/08	BARRIER MODIFICATIONS	JS BM	RG	44

REVISIONS

Caltrans Metric

DIST	COUNTY	ROUTE	KILOMETER POST TOTAL PROJECT	SHEET No	TOTAL SHEETS
04	SF	80	13.2/13.9	363 R5	1204

12/19/02
REGISTERED ELECTRICAL ENGINEER DATE

12-6-04
PLANS APPROVAL DATE

REGISTERED PROFESSIONAL ENGINEER JENS ERLINGSSON No. 8249 Exp. 9/30/06 ELECTRICAL STATE OF CALIFORNIA

PB POWER, Inc.
A Parsons Brinckerhoff Company
303 Second St., Suite 700N
San Francisco, CA 94107-1317

The State of California or its officers or agents shall not be responsible for the accuracy or completeness of electronic copies of this plan sheet.

Caltrans now has a web site! To get to the web site, go to http://www.dot.ca.gov

CONTRACT CHANGE ORDER NO. 150
SHEET 30 OF 42

REGISTERED PROFESSIONAL ENGINEER S. A. ESTOQUE, JR. No. E-10151 Exp. 12/31/2009 ELECTRICAL STATE OF CALIFORNIA △1 △2
FOR REVISION ONLY

REGISTERED PROFESSIONAL ENGINEER FADI WALIEDDINE No. 11465 Exp. 12/31/2009 ELECTRICAL STATE OF CALIFORNIA △3
FOR REVISION ONLY

REGISTERED PROFESSIONAL ENGINEER SYN YEE CHIN No. 18186 Exp. 09/30/2011 ELECTRICAL STATE OF CALIFORNIA △4 △5
FOR REVISION ONLY

CONDUIT DATA

Conduit No	Reference	Size	Type	Total Fill (mm2)	Allowable Fill (mm2)	Included Cable No.	Conductor Type
1T44	E-114A	610	152.4 mm siderail solid bottom tray	3785.76	38709.60	1473-5	50 pair #18, shielded pairs, IS/OS shield 600 V, XLPE Insul., PVC Jacket
						1474-5	50 pair #18, shielded pairs, IS/OS shield 600 V, XLPE Insul., PVC Jacket
						1475-3A	12 Fiber, single mode fiberoptic cable
						MVDSW02A	MVDS DLC
						Pull rope	Soft-Fiber Polyester
						1474-4	50 pair #18, shielded pairs, IS/OS shield 600 V, XLPE Insul., PVC Jacket
1T45	E-114B	610	152.4 mm siderail solid bottom tray	2972.95	38709.60	Pull rope	Soft-Fiber Polyester
						2900-182A	4 pair #22, shielded pairs, FEP Insulation
						2910-10	4 pair #22, shielded pairs, 300 V, PE Insulation
						2910-8	4 pair #22, shielded pairs, 300 V, PE Insulation
						1473-5	50 pair #18, shielded pairs, IS/OS shield 600 V, XLPE Insul., PVC Jacket
						1474-5	50 pair #18, shielded pairs, IS/OS shield 600 V, XLPE Insul., PVC Jacket
						1474-5B	1 - 6 pair, shielded #18 with overall shield , 300 V, PVC Jacket
						1474-5A	1 - 6 pair, shielded #18 with overall shield , 300 V, PVC Jacket
						2900-472C	4 pair #22, shielded pairs, FEP Insulation
						2900-182B	4 pair #22, shielded pairs, FEP Insulation
						2900-472A	4 pair #22, shielded pairs, FEP Insulation
						2900-462B	4 pair #22, shielded pairs, FEP Insulation
						2900-462A	4 pair #22, shielded pairs, FEP Insulation
						2900-392A	4 pair #22, shielded pairs, FEP Insulation
						2900-342A	4 pair #22, shielded pairs, FEP Insulation
						2900-282A	4 pair #22, shielded pairs, FEP Insulation
						2910-7	4 pair #24, overall shielded, 30 V, PE Insulation
						2900-472B	4 pair #22, shielded pairs, FEP Insulation
						2900-202A	4 pair #22, shielded pairs, FEP Insulation
						1115-1	1-2PR #18 Twisted Shielded w/overall shield
1T46	E-98, E-114	610	152.4 mm siderail solid bottom tray	5385.18 △5	38709.60	CCTVE01BD	TVL
						1474-7	50 pair #18, shielded pairs, IS/OS shield 600 V, XLPE Insul., PVC Jacket
						MVDSW03A	MVDS DLC
						CCTVE01BC	TVC
						1475-3B	12 Fiber, single mode fiberoptic cable
						Pull rope	Soft-Fiber Polyester
						1473-7	50 pair #18, shielded pairs, IS/OS shield 600 V, XLPE Insul., PVC Jacket
						△5 1479-1	72 Fiber, single mode fiber optic riser cable inside brown innerduct
						1479-2	72 Fiber, single mode fiber optic riser cable inside brown innerduct
						1481-2	12 Fiber, single mode fiber optic cable inside brown innerduct

For continuation, see next sheet.

CONDUIT AND TRAY SCHEDULE

E-408

DRAFT 1 (03/01/11)

STATE OF CALIFORNIA - DEPARTMENT OF TRANSPORTATION
Caltrans

DESIGN OVERSIGHT
BEHZAD GOLEMOHAMMADI

CALCULATED/DESIGNED BY PBP
CHECKED BY AB
DATE 8/02
REVISED BY 8/02
DATE REVISED

FOR REDUCED PLANS ORIGINAL 0 20 40 60 80
DGN FILE =>04-0120f1 0363R05.dgn
LAST REVISION DATE PLOTTED => 25-FEB-2011

CONDUIT DATA

Conduit No	Reference	Size	Type	Total Fill (mm²)	Allowable Fill (mm²)	Included Cable No.	Conductor Type
1T14A	E-20, E20E	305	152.4 mm slderall ladder tray	0.00	8387.08	Pull rope	Soft-Fiber Polyester
1T14B	E-20, E20E	305	152.4 mm slderall ladder tray	0.00	8387.08	Pull rope	Soft-Fiber Polyester
1T23A	E-126A	610	152.4 mm slderall ladder tray	0.00	16774.16	Pull rope	Soft-Fiber Polyester
1T29A	E-20 E20E	610	152.4 mm slderall ladder tray	0.00	16774.16	Pull rope	Soft-Fiber Polyester
1T29B	E-20, E20E	610	152.4 mm slderall ladder tray	0.00	16774.16	Pull rope	Soft-Fiber Polyester
1T33A	E-126A	610	152.4 mm slderall ladder tray	0.00	16774.16	Pull rope	Soft-Fiber Polyester
1T39A	E-20 E20E	610	152.4 mm slderall ladder tray	0.00	16774.16	Pull rope	Soft-Fiber Polyester
1T39B	E-20, E20E	610	152.4 mm slderall ladder tray	0.00	16774.16	Pull rope	Soft-Fiber Polyester
1T43A	E-126A	305	152.4 mm slderall solid bottom tray	1751.54 △1	8387.08 △1	1479-1	72 Fiber, single mode fiber optic riser cable inside brown innerduct
						1481-2	12 Fiber, single mode fiber optic cable inside brown innerduct
1T49A	E-20, E20E	610	152.4 mm slderall solid bottom tray	1751.54 △1	16774.16 △1	1479-1	72 Fiber, single mode fiber optic riser cable inside brown innerduct
						1481-2	12 Fiber, single mode fiber optic cable inside brown innerduct
1T49B	E-20, E20E	610	152.4 mm slderall ladder tray	1751.54 △1	16774.16 △1	1479-1	72 Fiber, single mode fiber optic riser cable inside brown innerduct
						1481-2	12 Fiber, single mode fiber optic cable inside brown innerduct
1T54A	E-20, E20E	610	152.4 mm slderall ladder tray	0.00	16774.16	Pull rope	Soft-Fiber Polyester
1T54B	E-20, E20E	610	152.4 mm slderall ladder tray	0.00	16774.16	Pull rope	Soft-Fiber Polyester

REQUEST FOR INFORMATION NOT ADDRESSED IN THIS CCO REMAIN IN FORCE

MARK	DATE	DESCRIPTIONS	BY	CH'D	CCO#
1	03/01/11	BASE INTEGRATION	RSB	WB	150
0	02/25/08	CABLE TRAY CHANGES	TW	RG	42S1

REVISIONS

CONTRACT CHANGE ORDER NO. 150
SHEET 31 OF 42

REGISTERED PROFESSIONAL ENGINEER S. A. ESTOQUE, JR. No. E-10151 Exp. 12/31/2008 ELECTRICAL STATE OF CALIFORNIA

FOR REVISION ONLY

REGISTERED PROFESSIONAL ENGINEER SYN YEE CHIN No. 18186 Exp. 09/30/2011 ELECTRICAL STATE OF CALIFORNIA

FOR REVISION ONLY △1

Caltrans Metric

DIST	COUNTY	ROUTE	KILOMETER POST TOTAL PROJECT	SHEET No	TOTAL SHEETS
04	SF	80	13.2/13.9	363 S1R1	1204

REGISTERED ELECTRICAL ENGINEER 12/19/02 DATE

12-6-04
PLANS APPROVAL DATE

REGISTERED PROFESSIONAL ENGINEER JENS ERLINGSSON No. 8249 Exp. 9/30/06 ELECTRICAL STATE OF CALIFORNIA

PB POWER, Inc.
A Parsons Brinckerhoff Company
303 Second St., Suite 700N
San Francisco, CA 94107-1317

The State of California or its officers or agents shall not be responsible for the accuracy or completeness of electronic copies of this plan sheet.

Caltrans now has a web site! To get to the web site, go to http://www.dot.ca.gov

CONDUIT DATA

Conduit No	Reference	Size	Type	Total Fill (mm²)	Allowable Fill (mm²)	Included Cable No.	Conductor Type

For continuation, see next sheet.

CONDUIT AND TRAY SCHEDULE

E-408A

REVISED BY	DATE	DATE REVISED
PBP	8/02	8/02 AB

CALCULATED/DESIGNED BY — CHECKED BY

DESIGN OVERSIGHT — BEHZAD GOLEMOHAMMADI

STATE OF CALIFORNIA - DEPARTMENT OF TRANSPORTATION
Caltrans

DRAFT 1 (03/01/11)

LAST REVISION — DATE PLOTTED => 28-FEB-2011

FOR REDUCED PLANS ORIGINAL 0 20 40 60 80 DGN FILE =>04-0120f1 0363S01R01.dgn

DIST	COUNTY	ROUTE	KILOMETER POST TOTAL PROJECT	SHEET No	TOTAL SHEETS
04	SF	80	13.2/13.9	364 R4	1204

REGISTERED ELECTRICAL ENGINEER 12/19/02 DATE

12-6-04
PLANS APPROVAL DATE

REGISTERED PROFESSIONAL ENGINEER JENS ERLINGSSON No. 8249 Exp. 9/30/06 ELECTRICAL STATE OF CALIFORNIA

PB POWER, Inc.
A Parsons Brinckerhoff Company
303 Second St., Suite 700N
San Francisco, CA 94107-1317

The State of California or its officers or agents shall not be responsible for the accuracy or completeness of electronic copies of this plan sheet.

Caltrans now has a web site! To get to the web site, go to http://www.dot.ca.gov

Caltrans Metric

MARK	DATE	DESCRIPTIONS	BY	CH'D	CCO#
4	03/01/11	BASE INTEGRATION	RSB	WB	150
3	02/01/10	DEHUMIDIFIER SCADA INTERFACE	RR	RG FW	130
2	02/25/08	CABLE TRAY CHANGES	TW	RG	42S1
1	03/04/08	BARRIER MODIFICATIONS	JS BM	RG SE	44

REQUEST FOR INFORMATION NOT ADDRESSED IN THIS CCO REMAIN IN FORCE

REVISIONS

CONTRACT CHANGE ORDER NO. 150
SHEET 32 OF 42

1 2 REGISTERED PROFESSIONAL ENGINEER S. A. ESTOOLE, JR. No. E-10151 Exp. 12/31/2008 ELECTRICAL STATE OF CALIFORNIA
FOR REVISION ONLY

3 REGISTERED PROFESSIONAL ENGINEER FADI WALIEDDINE No. 11465 Exp. 12/31/2011 ELECTRICAL STATE OF CALIFORNIA
FOR REVISION ONLY

4 REGISTERED PROFESSIONAL ENGINEER SYN YEE CHIN No. 18186 Exp. 09/30/2011 ELECTRICAL STATE OF CALIFORNIA
Syn Yee Chin
FOR REVISION ONLY

CONDUIT DATA

Conduit No	Reference	Size	Type	Total Fill (mm²)	Allowable Fill (mm²)	Included Cable No.	Conductor Type
1T47	E-117	610	152.4 mm siderail solid bottom tray	3785.76	38709.60	Pull rope	Soft-Fiber Polyester
						MVDSW04A	MVDS DLC
						1474-7	50 pair #18, shielded pairs, IS/OS shield 600 V, XLPE insul., PVC jacket
						1473-7	50 pair #18, shielded pairs, IS/OS shield 600 V, XLPE insul., PVC jacket
						1474-8	50 pair #18, shielded pairs, IS/OS shield 600 V, XLPE insul., PVC jacket
						1475-3C	12 Fiber, single mode fiberoptic cable
1T48	E-118	610	152.4 mm siderail solid bottom tray	2157.13	38709.60	Pull rope	Soft-Fiber Polyester
						1474-8A	1 - 6 pair, shielded #18 with overall shield , 300 V, PVC jacket
						1474-8B	1 - 6 pair, shielded #18 with overall shield , 300 V, PVC jacket
						1474-10	50 pair #18, shielded pairs, IS/OS shield 600 V, XLPE insul., PVC jacket
						1474-8	50 pair #18, shielded pairs, IS/OS shield 600 V, XLPE insul., PVC jacket
						1473-10	50 pair #18, shielded pairs, IS/OS shield 600 V, XLPE insul., PVC jacket
1T49	E-20B, E-126	305	152.4 mm siderail solid bottom tray	3698.65 4	19354.80	Pull rope	Soft-Fiber Polyester
						1474-4	50 pair #18, shielded pairs, IS/OS shield 600 V, XLPE insul., PVC jacket
						1475-3	72 Fiber, single mode fiber optic riser cable
						1477-2	72 Fiber, single mode fiber optic riser cable
						1115-1	1-2PR #18 Twisted Shielded w/overall shield
					4	1479-1	72 Fiber, single mode fiber optic riser cable inside brown Innerduct
						1481-2	12 Fiber, single mode fiber optic cable inside brown Innerduct
1T53	E-96, E-126A E-101	610	152.4 mm siderail solid bottom tray	0.00	16774.16	Pull rope	Soft-Fiber Polyester
1T54	E-20B, E-126	610	152.4 mm siderail ladder tray	0.00	16774.16	Pull rope	Soft-Fiber Polyester
2000	E-96	41	RGS conduit	323.69	534.55	UP104-7-1	1-2/C + gnd #8,600 V, EPR Insulation
						UP104-8-2	2 + 1 gnd #8,#10, 600 V, RHH/RHW Insulation
2001	E-96	53	RGS conduit	809.26	879.42	UP104-9	1-2/C + gnd #10,600 V, EPR Insulation
						UP104-8	1-2/C + gnd #8,600 V, EPR Insulation
						UP104-6	1-2/C + gnd #8,600 V, EPR Insulation
						UP104-7	1-2/C + gnd #8,600 V, EPR Insulation
2002	E-96	63	RGS conduit	905.49	1663.73	UP104-8-2	2 + 1 gnd #8,#10, 600 V, RHH/RHW Insulation
						UP104-6	1-2/C + gnd #8,600 V, EPR Insulation
						UP104-9	1-2/C + gnd #10,600 V, EPR Insulation
						UP104-7	1-2/C + gnd #8,600 V, EPR Insulation
						UP104-8	1-2/C + gnd #8,600 V, EPR Insulation
2003	E-96	41	RGS conduit	192.46	534.55	UP104-9-2	2 + 1 gnd #8,#10, 600 V, RHH/RHW Insulation
						UP104-6A	2 + 1 gnd #8,#10, 600 V, RHH/RHW Insulation
2004	E-96	53	RGS conduit	811.22	879.42	UP104-7	1-2/C + gnd #8,600 V, EPR Insulation
						UP104-8-1	3 + 1 gnd #8,#10, 600 V, RHH/RHW Insulation
						UP104-8-2	2 + 1 gnd #8,#10, 600 V, RHH/RHW Insulation
						UP104-9	1-2/C + gnd #10,600 V, EPR Insulation
						UP104-6	1-2/C + gnd #8,600 V, EPR Insulation
2005	E-96	41	RGS conduit	192.46	534.55	UP104-6b	2 + 1 gnd #8,#10, 600 V, RHH/RHW Insulation
						UP104-9-1	2 + 1 gnd #8,#10, 600 V, RHH/RHW Insulation
2006	E-96	53	RGS conduit	811.22	879.42	UP104-9	1-2/C + gnd #10,600 V, EPR Insulation
						UP104-6	1-2/C + gnd #8,600 V, EPR Insulation
						UP104-8-2	2 + 1 gnd #8,#10, 600 V, RHH/RHW Insulation
						UP104-8-1	3 + 1 gnd #8,#10, 600 V, RHH/RHW Insulation
						UP104-7	1-2/C + gnd #8,600 V, EPR Insulation
2007	E-97	41	RGS conduit	354.34	534.55	UP104-9	1-2/C + gnd #10,600 V, EPR Insulation
						UP104-6	1-2/C + gnd #8,600 V, EPR Insulation
2008	E-97	53	RGS conduit	456.88	879.42	UP104-8-2	2 + 1 gnd #8,#10, 600 V, RHH/RHW Insulation
						UP104-8-1	3 + 1 gnd #8,#10, 600 V, RHH/RHW Insulation
						UP105-7-1	1-2/C + gnd #8,600 V, EPR Insulation
2009	E-97	63	RGS conduit	909.84	1663.73	UP105-7	1-2/C + gnd #8,600 V, EPR Insulation
						UP105-9	1-2/C + gnd #8,600 V, EPR Insulation
						UP105-10	1-2/C + gnd #8,600 V, EPR Insulation
						UP105-8	1-2/C + gnd #8,600 V, EPR Insulation

CONDUIT DATA

Conduit No	Reference	Size	Type	Total Fill (mm²)	Allowable Fill (mm²)	Included Cable No.	Conductor Type
2010	E-97	63	RGS conduit	1139.26	1663.73	UP104-8-2	2 + 1 gnd #8,#10, 600 V, RHH/RHW Insulation
						UP104-8-1	3 + 1 gnd #8,#10, 600 V, RHH/RHW Insulation
						UP105-8	1-2/C + gnd #8,600 V, EPR Insulation
						UP105-7	1-2/C + gnd #8,600 V, EPR Insulation
						UP105-9	1-2/C + gnd #8,600 V, EPR Insulation
						UP105-10	1-2/C + gnd #8,600 V, EPR Insulation
2011	E-97	41	RGS conduit	192.46	534.55	UP105-10A	2 + 1 gnd #8,#10, 600 V, RHH/RHW Insulation
						UP105-9-2	2 + 1 gnd #8,#10, 600 V, RHH/RHW Insulation
2012	E-97	63	RGS conduit	911.80	1663.73	UP105-9	1-2/C + gnd #8,600 V, EPR Insulation
						UP105-10	1-2/C + gnd #8,600 V, EPR Insulation
						UP105-8-1	3 + 1 gnd #8,#10, 600 V, RHH/RHW Insulation
						UP105-7	1-2/C + gnd #8,600 V, EPR Insulation
						UP105-8-2	2 + 1 gnd #8,#10, 600 V, RHH/RHW Insulation
2013	E-97	41	RGS conduit	192.46	534.55	UP105-10b	2 + 1 gnd #8,#10, 600 V, RHH/RHW Insulation
						UP105-9-1	2 + 1 gnd #8,#10, 600 V, RHH/RHW Insulation
2014	E-97	63	RGS conduit	911.80	1663.73	UP105-10	1-2/C + gnd #8,600 V, EPR Insulation
						UP105-8-1	3 + 1 gnd #8,#10, 600 V, RHH/RHW Insulation
						UP105-8-2	2 + 1 gnd #8,#10, 600 V, RHH/RHW Insulation
						UP105-7	1-2/C + gnd #8,600 V, EPR Insulation
						UP105-9	1-2/C + gnd #8,600 V, EPR Insulation
2015	E-97	41	RGS conduit	454.92	534.55	UP105-10	1-2/C + gnd #8,600 V, EPR Insulation
						UP105-9	1-2/C + gnd #8,600 V, EPR Insulation
2016	E-97	63	RGS conduit	229.42	1663.73	UP105-8-1	3 + 1 gnd #8,#10, 600 V, RHH/RHW Insulation
						UP105-8-2	2 + 1 gnd #8,#10, 600 V, RHH/RHW Insulation
2017	E-98	63	RGS conduit	909.84	1663.73	UP106-6	1-2/C + gnd #8,600 V, EPR Insulation
						UP106-8	1-2/C + gnd #8,600 V, EPR Insulation
						UP106-7	1-2/C + gnd #8,600 V, EPR Insulation
						UP106-9	1-2/C + gnd #8,600 V, EPR Insulation
2018	E-98	63	RGS conduit	1139.26	1663.73	UP106-7	1-2/C + gnd #8,600 V, EPR Insulation
						UP106-9	1-2/C + gnd #8,600 V, EPR Insulation
						UP106-6	1-2/C + gnd #8,600 V, EPR Insulation
						UP105-8-1	3 + 1 gnd #8,#10, 600 V, RHH/RHW Insulation
						UP105-8-2	2 + 1 gnd #8,#10, 600 V, RHH/RHW Insulation
						UP106-8	1-2/C + gnd #8,600 V, EPR Insulation
2019	E-98	41	RGS conduit	323.69	534.55	UP106-6A	1-2/C + gnd #8,600 V, EPR Insulation
						UP106-9-2	2 + 1 gnd #8,#10, 600 V, RHH/RHW Insulation
2020	E-98	63	RGS conduit	911.80	1663.73	UP106-6	1-2/C + gnd #8,600 V, EPR Insulation
						UP106-8-1	3 + 1 gnd #8,#10, 600 V, RHH/RHW Insulation
						UP106-7	1-2/C + gnd #8,600 V, EPR Insulation
						UP106-8-2	2 + 1 gnd #8,#10, 600 V, RHH/RHW Insulation
						UP106-9	1-2/C + gnd #8,600 V, EPR Insulation

For continuation, see next sheet.

CONDUIT AND TRAY SCHEDULE

E-409

REVISED BY	DATE REVISED
PBP	8/02

CALCULATED/DESIGNED BY	CHECKED BY
AB	8/02

DESIGN OVERSIGHT
BEHZAD GOLEMOHAMMADI

STATE OF CALIFORNIA - DEPARTMENT OF TRANSPORTATION
Caltrans

DRAFT 1 (03/01/11)

LAST REVISION DATE PLOTTED => 08-FEB-2011

DGN FILE =>04-0120f1 0364R04.dgn

CONDUIT DATA

Conduit No	Reference	Size	Type	Total Fill (mm2)	Allowable Fill (mm2)	Included Cable No.	Conductor Type
2T43	E-114B	610	5	11829.72	38709.60	2900-152C	4 pair #22, shielded pairs, FEP Insulation
						2900-292A	4 pair #22, shielded pairs, FEP Insulation
						2900-272C	4 pair #22, shielded pairs, FEP Insulation
						2900-272B	4 pair #22, shielded pairs, FEP Insulation
						2900-272A	4 pair #22, shielded pairs, FEP Insulation
						2900-192C	4 pair #22, shielded pairs, FEP Insulation
						2900-192B	4 pair #22, shielded pairs, FEP Insulation
						2900-192A	4 pair #22, shielded pairs, FEP Insulation
						2900-172C	4 pair #22, shielded pairs, FEP Insulation
						2900-172B	4 pair #22, shielded pairs, FEP Insulation
						2900-172A	4 pair #22, shielded pairs, FEP Insulation
						1473-6	50 pair #18, shielded pairs, IS/OS shield 600 V, XLPE Insul., PVC Jacket
						2900-162A	4 pair #22, shielded pairs, FEP Insulation
						2900-332C	4 pair #22, shielded pairs, FEP Insulation
						2900-152B	4 pair #22, shielded pairs, FEP Insulation
						2900-152A	4 pair #22, shielded pairs, FEP Insulation
						2900-142A	4 pair #22, shielded pairs, FEP Insulation
						2910-8	4 pair #22, shielded pairs, 300 V, PE Insulation
						2119-2	4 pair #22, shielded pairs, 300 V, PE Insulation
						2475-3C	12 Fiber, single mode fiberoptic cable
						MVDSE03A	MVDS DLC
						MVDSE01A	MVDS DLC
						MVDSE02A	MVDS DLC
						2154	1 - 2 pair, shielded #18 with IS/OA, 300 V, PVC Jacket
						2900-162B	4 pair #22, shielded pairs, FEP Insulation
						2900-442A	4 pair #22, shielded pairs, FEP Insulation
						2474-10	50 pair #18, shielded pairs, IS/OS shield 600 V, XLPE Insul., PVC Jacket
						1474-6	50 pair #18, shielded pairs, IS/OS shield 600 V, XLPE Insul., PVC Jacket
						1473-4	50 pair #18, shielded pairs, IS/OS shield 600 V, XLPE Insul., PVC Jacket
						2910-7	4 pair #24, overall shielded, 300V, PE Insulation
						2910-3	4 pair #22, shielded pairs, FEP Insulation
						2910-2	4 pair #22, shielded pairs, FEP Insulation
						2910-12	4 pair #22, shielded pairs, 300 V, PE Insulation
						2910-11	1-3/C #16,600 V, EPR Insulation
						2900-482A	4 pair #22, shielded pairs, FEP Insulation
						2900-452B	4 pair #22, shielded pairs, FEP Insulation
						2900-452A	4 pair #22, shielded pairs, FEP Insulation
						2900-332A	4 pair #22, shielded pairs, FEP Insulation
						2900-442B	4 pair #22, shielded pairs, FEP Insulation
						2900-332B	4 pair #22, shielded pairs, FEP Insulation
						2900-432A	4 pair #22, shielded pairs, FEP Insulation
						2900-422B	4 pair #22, shielded pairs, FEP Insulation
						2900-422A	4 pair #22, shielded pairs, FEP Insulation
						2900-412C	4 pair #22, shielded pairs, FEP Insulation
						2900-412B	4 pair #22, shielded pairs, FEP Insulation
						2900-412A	4 pair #22, shielded pairs, FEP Insulation
						2900-402A	4 pair #22, shielded pairs, FEP Insulation
						2900-382C	4 pair #22, shielded pairs, FEP Insulation
						2900-382B	4 pair #22, shielded pairs, FEP Insulation
						2900-382A	4 pair #22, shielded pairs, FEP Insulation
						2148	1 - 2 pair, shielded #18 with IS/OA, 300 V, PVC Jacket
						2900-442C	4 pair #22, shielded pairs, FEP Insulation
						CCTVE01AD	TVL
						1473-8	50 pair #18, shielded pairs, IS/OS shield 600 V, XLPE Insul., PVC Jacket
						Pull rope	Soft-Fiber Polyester
						2475-3A	12 Fiber, single mode fiberoptic cable
						2475-3B	12 Fiber, single mode fiberoptic cable
						2475-3	72 Fiber, single mode fiberoptic riser cable
						CCTVE01BC	TVC
						CCTVE01BD	TVL
						CCTVE01AC	TVC
						2900-432B	4 pair #22, shielded pairs, FEP Insulation
						MVDSW03A	MVDS DLC
						2120-1	1-2PR #18 Twisted Shielded w/overall Shield
						1118-1	1-2PR #18 Twisted Shielded w/overall Shield
						2121-1	1-2PR #18 Twisted Shielded w/overall Shield
					5	2479-1	72 Fiber, single mode fiber optic riser cable inside brown innerduct

REQUEST FOR INFORMATION NOT ADDRESSED IN THIS CCO REMAIN IN FORCE

MARK	DATE	DESCRIPTIONS	BY	CH'D	CCO#
5	03/01/11	BASE INTEGRATION	RSB	WB	150
4	03/26/10	DEHUMIDIFIER SCADA INTERFACE	RR	RG FW	130
3	03/30/09	SERVICE PLATFORM ELECTRICAL CHANGES	RY RR	RG MP	55
2	02/25/08	CABLE TRAY CHANGES	TW	RG	42S1
1	03/04/08	BARRIER MODIFICATIONS	JS BM	RG SE	44

REVISIONS

CONTRACT CHANGE ORDER NO. 150
SHEET 33 OF 42

REGISTERED PROFESSIONAL ENGINEER S. A. ESTOQUE, JR. No. E-10151 Exp. 12/31/2009 ELECTRICAL STATE OF CALIFORNIA 1 2
FOR REVISION ONLY

REGISTERED PROFESSIONAL ENGINEER FADI WALIEDDINE No. 11465 Exp. 12/31/2009 ELECTRICAL STATE OF CALIFORNIA 3
FOR REVISION ONLY

REGISTERED PROFESSIONAL ENGINEER SYN YEE CHIN No. 18186 Exp. 09/30/2011 ELECTRICAL STATE OF CALIFORNIA 4 5
FOR REVISION ONLY

Caltrans Metric

DIST	COUNTY	ROUTE	KILOMETER POST TOTAL PROJECT	SHEET No	TOTAL SHEETS
04	SF	80	13.2/13.9	375 R5	1204

REGISTERED ELECTRICAL ENGINEER 12/19/02 DATE

12-6-04
PLANS APPROVAL DATE

REGISTERED PROFESSIONAL ENGINEER JENS ERLINGSSON No. 8249 Exp. 9/30/06 ELECTRICAL STATE OF CALIFORNIA

PB POWER, Inc.
A Parsons Brinckerhoff Company
303 Second St., Suite 700N
San Francisco, CA 94107-1317

The State of California or its officers or agents shall not be responsible for the accuracy or completeness of electronic copies of this plan sheet.

Caltrans now has a web site! To get to the web site, go to: http://www.dot.ca.gov

CONDUIT DATA

Conduit No	Reference	Size	Type	Total Fill (mm2)	Allowable Fill (mm2)	Included Cable No.	Conductor Type
						MVDSW03A	MVDS DLC
2T44	E-115, E-182	610	152.4 mm siderail solid bottom tray	5109.21	38709.60	2119-2	4 pair #22, shielded pairs, 300 V, PE Insulation
						1473-4	50 pair #18, shielded pairs, IS/OS shield 600 V, XLPE Insul., PVC Jacket
						1474-5	50 pair #18, shielded pairs, IS/OS shield 600 V, XLPE Insul., PVC Jacket
						1474-4	50 pair #18, shielded pairs, IS/OS shield 600 V, XLPE Insul., PVC Jacket
						Pull rope	Soft-Fiber Polyester
						MVDSE01A	MVDS DLC
						2475-3A	12 Fiber, single mode fiberoptic cable
						1473-5	50 pair #18, shielded pairs, IS/OS shield 600 V, XLPE Insul., PVC Jacket
2T45	E-115, E-182	610	152.4 mm siderail solid bottom tray	7725.32	38709.60	2900-432B	4 pair #22, shielded pairs, FEP Insulation
						2910-12	4 pair #22, shielded pairs, 300 V, PE Insulation
						Pull rope	Soft-Fiber Polyester
						2900-412A	4 pair #22, shielded pairs, FEP Insulation
						2910-11	1-3/C #16,600 V, EPR Insulation
						2910-7	4 pair #24, overall shielded, 30V, PE Insulation
						2910-10	4 pair #22, shielded pairs, 300 V, PE Insulation
						2910-8	4 pair #22, shielded pairs, 300 V, PE Insulation
						2900-422B	4 pair #22, shielded pairs, FEP Insulation
						2900-422A	4 pair #22, shielded pairs, FEP Insulation
						2900-412C	4 pair #22, shielded pairs, FEP Insulation
						2900-412B	4 pair #22, shielded pairs, FEP Insulation
						2900-382C	4 pair #22, shielded pairs, FEP Insulation
						2900-402A	4 pair #22, shielded pairs, FEP Insulation
						2900-272C	4 pair #22, shielded pairs, FEP Insulation
						2900-382B	4 pair #22, shielded pairs, FEP Insulation
						2900-382A	4 pair #22, shielded pairs, FEP Insulation
						2900-332C	4 pair #22, shielded pairs, FEP Insulation
						2900-332B	4 pair #22, shielded pairs, FEP Insulation
						2900-332A	4 pair #22, shielded pairs, FEP Insulation
						2900-292A	4 pair #22, shielded pairs, FEP Insulation
						2900-172A	4 pair #22, shielded pairs, FEP Insulation
						2900-192B	4 pair #22, shielded pairs, FEP Insulation
						2900-142A	4 pair #22, shielded pairs, FEP Insulation
						1474-5A	1 - 6 pair, shielded #18 with overall shield, 300 V, PVC Jacket
						2910-3	4 pair #22, shielded pairs, FEP Insulation
						2910-2	4 pair #22, shielded pairs, FEP Insulation
						2900-482A	4 pair #22, shielded pairs, FEP Insulation
						2900-452B	4 pair #22, shielded pairs, FEP Insulation
						2120-1	1-2PR #18 Twisted Shielded w/overall Shield
						2121-1	1-2PR #18 Twisted Shielded w/overall Shield
						2155	1 - 2 pair, shielded #18 with IS/OA, 300 V, PVC Jacket

For continuation, see next sheet

CONDUIT AND TRAY SCHEDULE

E-420

DRAFT 1 (03/01/11)

STATE OF CALIFORNIA - DEPARTMENT OF TRANSPORTATION
Caltrans

DESIGN OVERSIGHT
BEHZAD GOLEMOHAMMADI

CALCULATED/DESIGNED BY PBP
CHECKED BY AB
DATE REVISED 8/02
DATE REVISED 8/02

LAST REVISION DATE PLOTTED => 28-FEB-2011

DGN FILE =>04-0120f1 0375R05.dgn

FOR REDUCED PLANS ORIGINAL 0 20 40 60 80

DIST	COUNTY	ROUTE	KILOMETER POST TOTAL PROJECT	SHEET No	TOTAL SHEETS
04	SF	80	13.2/13.9	376 R4	1204

REGISTERED ELECTRICAL ENGINEER 12/19/02 DATE

12-6-04
PLANS APPROVAL DATE

REGISTERED PROFESSIONAL ENGINEER JENS ERLINGSSON No. 8249 Exp. 9/30/06 ELECTRICAL STATE OF CALIFORNIA

PB POWER, Inc.
A Parsons Brinckerhoff Company
303 Second St., Suite 700N
San Francisco, CA 94107-1317

The State of California or its officers or agents shall not be responsible for the accuracy or completeness of electronic copies of this plan sheet.

Caltrans now has a web site! To get to the web site, go to http://www.dot.ca.gov

Caltrans Metric

REQUEST FOR INFORMATION NOT ADDRESSED IN THIS CCO REMAIN IN FORCE

MARK	DATE	DESCRIPTIONS	BY	CH'D	CCO#
4	03/01/11	BASE INTEGRATION	RSB	WB	150
3	03/26/10	DEHUMIDIFIER SCADA INTERFACE	TW	RG SYC	130
2	02/25/08	CABLE TRAY CHANGES	TW	RG	42S1
1	03/04/08	BARRIER MODIFICATIONS	JS BM	RG SE	44

REVISIONS

CONTRACT CHANGE ORDER NO. 150
SHEET 34 OF 42

REGISTERED PROFESSIONAL ENGINEER SYN YEE CHIN No. 18186 Exp. 09/30/2011 ELECTRICAL STATE OF CALIFORNIA

3 4 Syn Yee Chin
FOR REVISION ONLY

REGISTERED PROFESSIONAL ENGINEER S. A. ESTOQUE, JR. No. E-10151 Exp. 12/31/2008 ELECTRICAL STATE OF CALIFORNIA

1 2 S. Estoque
FOR REVISION ONLY

CONDUIT DATA

Conduit No	Reference	Size	Type	Total Fill (mm²)	Allowable Fill (mm²)	Included Cable No.	Conductor Type
						2900-452A	4 pair #22, shielded pairs, FEP Insulation
						2900-442A	4 pair #22, shielded pairs, FEP Insulation
						2900-442C	4 pair #22, shielded pairs, FEP Insulation
						2900-442B	4 pair #22, shielded pairs, FEP Insulation
						2900-272A	4 pair #22, shielded pairs, FEP Insulation
						2900-162A	4 pair #22, shielded pairs, FEP Insulation
						2900-192C	4 pair #22, shielded pairs, FEP Insulation
						1474-5	50 pair #18, shielded pairs, IS/OS shield 600 V, XLPE Insul., PVC Jacket
						2900-432A	4 pair #22, shielded pairs, FEP Insulation
						2900-192A	4 pair #22, shielded pairs, FEP Insulation
						2900-172C	4 pair #22, shielded pairs, FEP Insulation
						2900-172B	4 pair #22, shielded pairs, FEP Insulation
						2900-162B	4 pair #22, shielded pairs, FEP Insulation
						2900-152C	4 pair #22, shielded pairs, FEP Insulation
						2900-152B	4 pair #22, shielded pairs, FEP Insulation
						2900-152A	4 pair #22, shielded pairs, FEP Insulation
						1474-5B	1 - 6 pair, shielded #18 with overall shield, 300 V, PVC Jacket
						1474-6	50 pair #18, shielded pairs, IS/OS shield 600 V, XLPE Insul., PVC Jacket
						1473-5	50 pair #18, shielded pairs, IS/OS shield 600 V, XLPE Insul., PVC Jacket
						1473-6	50 pair #18, shielded pairs, IS/OS shield 600 V, XLPE Insul., PVC Jacket
						2900-272B	4 pair #22, shielded pairs, FEP Insulation
2T46	E-115, E-183	610	152.4 mm siderail solid bottom tray	6361.32	38709.60	1474-6	50 pair #18, shielded pairs, IS/OS shield 600 V, XLPE Insul., PVC Jacket
				4		Pull rope	Soft-Fiber Polyester
						MVDSE02A	MVDS DLC
						CCTVE01AD	TVL
						CCTVE01AC	TVC
						MVDSW03A	MVDS DLC
						CCTVE01BD	TVL
						CCTVE01BC	TVC
						1473-7	50 pair #18, shielded pairs, IS/OS shield 600 V, XLPE Insul., PVC Jacket
						1474-7	50 pair #18, shielded pairs, IS/OS shield 600 V, XLPE Insul., PVC Jacket
						1473-6	50 pair #18, shielded pairs, IS/OS shield 600 V, XLPE Insul., PVC Jacket
						~~2475-3B~~	~~12 Fiber, single mode fiber optic cable~~
					4	2479-1	72 Fiber, single mode fiber optic riser cable inside brown innerduct
2T47	E-117, E-184	610	152.4 mm siderail solid bottom tray	4987.47	38709.60	1474-7	50 pair #18, shielded pairs, IS/OS shield 600 V, XLPE Insul., PVC Jacket
						MVDSE03A	MVDS DLC
						2475-3C	12 Fiber, single mode fiber optic cable
						1473-8	50 pair #18, shielded pairs, IS/OS shield 600 V, XLPE Insul., PVC Jacket
						1473-7	50 pair #18, shielded pairs, IS/OS shield 600 V, XLPE Insul., PVC Jacket
						1474-8	50 pair #18, shielded pairs, IS/OS shield 600 V, XLPE Insul., PVC Jacket
						Pull rope	Soft-Fiber Polyester
2T48	E-118, E-185	610	152.4 mm siderail solid bottom tray	6816.85	38709.60	Pull rope	Soft-Fiber Polyester
						1474-10	50 pair #18, shielded pairs, IS/OS shield 600 V, XLPE Insul., PVC Jacket
						1474-8A	1 - 6 pair, shielded #18 with overall shield, 300 V, PVC Jacket
						1474-8B	1 - 6 pair, shielded #18 with overall shield, 300 V, PVC Jacket
						1474-8	50 pair #18, shielded pairs, IS/OS shield 600 V, XLPE Insul., PVC Jacket
						2154	1 - 2 pair, shielded #18 with IS/OA, 300 V, PVC Jacket
						2148	1 - 2 pair, shielded #18 with IS/OA, 300 V, PVC Jacket
						2149	1 - 2 pair, shielded #18 with IS/OA, 300 V, PVC Jacket
						1473-10	50 pair #18, shielded pairs, IS/OS shield 600 V, XLPE Insul., PVC Jacket
						1473-8	50 pair #18, shielded pairs, IS/OS shield 600 V, XLPE Insul., PVC Jacket
						2474-10	50 pair #18, shielded pairs, IS/OS shield 600 V, XLPE Insul., PVC Jacket
						2150	1 - 2 pair, shielded #18 with IS/OA, 300 V, PVC Jacket
						1118-1	1-2PR #18 Twisted Shielded w/overall shield

CONDUIT DATA

Conduit No	Reference	Size	Type	Total Fill (mm²)	Allowable Fill (mm²)	Included Cable No.	Conductor Type
2T49	E-212, E-21B	305	152.4 mm siderail ladder tray	1904.72	19354.80	Pull rope	Soft-Fiber Polyester
						2900-152A	4 pair #22, shielded pairs, FEP Insulation
						2900-152C	4 pair #22, shielded pairs, FEP Insulation
						2900-162A	4 pair #22, shielded pairs, FEP Insulation
						2900-162B	4 pair #22, shielded pairs, FEP Insulation
						2910-2	4 pair #22, shielded pairs, FEP Insulation
						2910-3	4 pair #22, shielded pairs, FEP Insulation
						1473-4	50 pair #18, shielded pairs, IS/OS shield 600 V, XLPE Insul., PVC Jacket
						2475-3	72 Fiber, single mode fiberoptic riser cable
						2900-152B	4 pair #22, shielded pairs, FEP Insulation
						2900-142A	4 pair #22, shielded pairs, FEP Insulation
2T53	E-181 Thru E-186 E-212A	610	152.4 mm siderail solid bottom tray	0.00	38709.60	Pull rope	Soft-Fiber Polyester
2T54	E-212, E-21B	610	152.4 mm siderail ladder tray	0.00	16774.16	Pull rope	Soft-Fiber Polyester
3000		41	RGS conduit	323.69	534.55	UP204-8-2	2 + 1gnd #8,#10, 600 V, RHH/RHW Insulation
						UP204-7-1	1-2/C + gnd #8,600 V, EPR Insulation
3001		41	RGS conduit	454.92	534.55	UP204-7	1-2/C + gnd #8,600 V, EPR Insulation
						UP204-8	1-2/C + gnd #8,600 V, EPR Insulation
3002		53	RGS conduit	684.34	879.42	UP204-7	1-2/C + gnd #8,600 V, EPR Insulation
						UP205-7-1	1-2/C + gnd #8,600 V, EPR Insulation
						UP204-8-2	2 + 1gnd #8,#10, 600 V, RHH/RHW Insulation
						UP204-8-1	3 + 1gnd #8,#10, 600 V, RHH/RHW Insulation
3003		41	RGS conduit	454.92	534.55	UP205-8	1-2/C + gnd #8,600 V, EPR Insulation
						UP205-7	1-2/C + gnd #8,600 V, EPR Insulation
3004		53	RGS conduit	684.34	879.42	UP205-8-2	2 + 1gnd #8,#10, 600 V, RHH/RHW Insulation
						UP205-8-1	3 + 1gnd #8,#10, 600 V, RHH/RHW Insulation
						UP206-7-1	1-2/C + gnd #8,600 V, EPR Insulation
						UP205-7	1-2/C + gnd #8,600 V, EPR Insulation
3005		41	RGS conduit	454.92	534.55	UP206-8	1-2/C + gnd #8,600 V, EPR Insulation
						UP206-7	1-2/C + gnd #8,600 V, EPR Insulation
3006		53	RGS conduit	684.34	879.42	UP206-7	1-2/C + gnd #8,600 V, EPR Insulation
						UP207-7-1	1-2/C + gnd #8,600 V, EPR Insulation
						UP206-8-1	3 + 1gnd #8,#10, 600 V, RHH/RHW Insulation
						UP206-8-2	2 + 1gnd #8,#10, 600 V, RHH/RHW Insulation
3007		41	RGS conduit	454.92	534.55	UP207-8	1-2/C + gnd #8,600 V, EPR Insulation
						UP207-7	1-2/C + gnd #8,600 V, EPR Insulation
3008		53	RGS conduit	684.34	879.42	UP207-8-2	2 + 1gnd #8,#10, 600 V, RHH/RHW Insulation
						UP207-8-1	3 + 1gnd #8,#10, 600 V, RHH/RHW Insulation
						UP207-7	1-2/C + gnd #8,600 V, EPR Insulation
						UP208-7-1	1-2/C + gnd #8,600 V, EPR Insulation
3009		41	RGS conduit	454.92	534.55	UP208-8	1-2/C + gnd #8,600 V, EPR Insulation
						UP208-7	1-2/C + gnd #8,600 V, EPR Insulation

For continuation, see next sheet.

CONDUIT AND TRAY SCHEDULE

E-421

ALL DIMENSIONS ARE IN MILLIMETERS UNLESS OTHERWISE SHOWN

DESIGN OVERSIGHT: BEHZAD GOLEMOHAMMADI

CALCULATED/DESIGNED BY: PBP | CHECKED BY: AB | DATE 8/02 | DATE 8/02 | REVISED BY | DATE REVISED

STATE OF CALIFORNIA - DEPARTMENT OF TRANSPORTATION

Caltrans

DRAFT 1 (03/01/11)

LAST REVISION | DATE PLOTTED => 25-FEB-2011

FOR REDUCED PLANS ORIGINAL 0 20 40 60 80 | DGN FILE =>04-0120f1 0376R04.dgn

DIST	COUNTY	ROUTE	KILOMETER POST TOTAL PROJECT	SHEET No	TOTAL SHEETS
04	SF	80	13.2/13.9	405 R1	1204

REGISTERED ELECTRICAL ENGINEER 2/6/04 DATE

12-6-04
PLANS APPROVAL DATE

REGISTERED PROFESSIONAL ENGINEER JENS ERLINGSSON No. 8249 Exp. 9/30/06 ELECTRICAL STATE OF CALIFORNIA

PB POWER, Inc.
A Parsons Brinckerhoff Company
303 Second St., Suite 700N
San Francisco, CA 94107-1317

The State of California or its officers or agents shall not be responsible for the accuracy or completeness of electronic copies of this plan sheet.

Caltrans now has a web site! To get to the web site, go to http://www.dot.ca.gov

Caltrans Metric

REQUEST FOR INFORMATION NOT ADDRESSED IN THIS CCO REMAIN IN FORCE

MARK	DATE	DESCRIPTIONS	BY	CH'D	CCO#
1	03/01/11	BASE INTEGRATION	RSB	WB	150

REVISIONS

CONTRACT CHANGE ORDER NO. 150
SHEET 35 OF 42

REGISTERED PROFESSIONAL ENGINEER SYN YEE CHIN No. 18186 Exp. 09/30/2011 ELECTRICAL STATE OF CALIFORNIA

Syn Yee Chin
FOR REVISION ONLY

CONDUIT DATA

Conduit No	Reference	Size	Type	Total Fill (mm²)	Allowable Fill (mm²)	Included Cable No.	Conductor Type
* 2471	E-186A, E-221C	103	RGS conduit	2403.42	2576.49	2473-10	50 pair #18, shielded pairs, IS/OS shield 600 V, XLPE insul., PVC jacket
						2474-10	50 pair #18, shielded pairs, IS/OS shield 600 V, XLPE insul., PVC jacket
* 2472	E-186A, E-221C	103	RGS conduit	323.65	4404.97	2475-3	72 Fiber, single mode fiber optic riser cable
* 2474	E-186A, E-221C	103	RGS conduit	3503.08	4404.97	2479-1	72 Fiber, single mode fiber optic riser cable inside brown innerduct
						Black Innerduct	25.4 mm Smoothwall black innerduct
						Blue Innerduct	25.4 mm Smoothwall blue innerduct
						White Innerduct	25.4 mm Smoothwall white innerduct
* 2491	E-186A, E-221C	103	RGS conduit	2628.48	3324.51	2391	3-1/C #4/0, 15 kV, EPR insulation
** 2493	Skyway Structure EB	103	RGS conduit	2628.48	3324.51	2391	3-1/C #4/0, 15 kV, EPR insulation
** 4858	Skyway Structure WB	78	RGS - PVC coated conduit	1201.71	2564.19	1473-10	50 pair #18, shielded pairs, IS/OS shield 600 V, XLPE insul., PVC jacket
** 5858	Skyway Structure EB	78	RGS - PVC coated conduit	1201.71	2564.19	2473-10	50 pair #18, shielded pairs, IS/OS shield 600 V, XLPE insul., PVC jacket
* 6501	E-101A, E-132C	103	RGS conduit	2628.48	3324.51	1391	3-1/C #4/0, 15 kV, EPR insulation
6502	E-101A, E-132C	103	Liquidtight flex metal conduit	2628.48	3275.44	1391	3-1/C #4/0, 15 kV, EPR insulation
** 6503	Skyway Structure WB	103	RGS conduit	2628.48	3324.51	1391	3-1/C #4/0, 15 kV, EPR insulation
6511	E-101A, E-132C	103	Liquidtight flex metal conduit	0.00	3275.44	Pull rope	Soft-fiber polyester
6512	E-101A, E-132C	103	Liquidtight flex metal conduit	0.00	3275.44	Pull rope	Soft-fiber polyester
6513	E-101A, E-132C	103	Liquidtight flex metal conduit	0.00	3275.44	Pull rope	Soft-fiber polyester
6514	E-101A, E-132C	103	Liquidtight flex metal conduit	0.00	3275.44	Pull rope	Soft-fiber polyester
* 6517	E-101A, E-132C	103	RGS conduit	2403.42	2576.49	1473-10	50 pair #18, shielded pairs, IS/OS shield 600 V, XLPE insul., PVC jacket
						1474-10	50 pair #18, shielded pairs, IS/OS shield 600 V, XLPE insul., PVC jacket
* 6518	E-101A, E-132C	103	RGS conduit	647.30	2576.49	1475-3	72 Fiber, single mode fiber optic riser cable
						1477-2	72 Fiber, single mode fiber optic riser cable
* 6520	E-101A, E-132C	103	RGS conduit	3503.08	4404.97	1479-2	72 Fiber, single mode fiber optic riser cable inside brown innerduct
						Black Innerduct	25.4 mm Smoothwall black innerduct
						Blue Innerduct	25.4 mm Smoothwall blue innerduct
						White Innerduct	25.4 mm Smoothwall white innerduct
6522	E-101A, E-132C	103	Liquidtight flex metal conduit	2403.42	2538.46	1473-10	50 pair #18, shielded pairs, IS/OS shield 600 V, XLPE insul., PVC jacket
						1474-10	50 pair #18, shielded pairs, IS/OS shield 600 V, XLPE insul., PVC jacket
6523	E-101A, E-132C	103	Liquidtight flex metal conduit	647.30	2538.46	1475-3	72 Fiber, single mode fiber optic riser cable
						1477-2	72 Fiber, single mode fiber optic riser cable
6524	E-101A, E-132C	103	Liquidtight flex metal conduit	0.00	3275.44	Pull rope	Soft-fiber polyester
6525	E-101A, E-132C	103	Liquidtight flex metal conduit	3503.08	4339.96	1479-2	72 Fiber, single mode fiber optic riser cable inside brown innerduct
						Black Innerduct	25.4 mm Smoothwall black innerduct
						Blue Innerduct	25.4 mm Smoothwall blue innerduct
						White Innerduct	25.4 mm Smoothwall white innerduct
6526	E-101A, E-132C	103	Liquidtight flex metal conduit	0.00	3275.44	Pull rope	Soft-fiber polyester
7475	E-186A, E-221C	103	Liquidtight flex metal conduit	2403.42	2538.46	2473-10	50 pair #18, shielded pairs, IS/OS shield 600 V, XLPE insul., PVC jacket
						2474-10	50 pair #18, shielded pairs, IS/OS shield 600 V, XLPE insul., PVC jacket

CONDUIT DATA

Conduit No	Reference	Size	Type	Total Fill (mm²)	Allowable Fill (mm²)	Included Cable No.	Conductor Type
7476	E-186A, E-221C	103	Liquidtight flex metal conduit	323.65	4339.96	2475-3	72 Fiber, single mode fiber optic riser cable
7477	E-186A, E-221C	103	Liquidtight flex metal conduit	0.00	3275.44	Pull rope	Soft-fiber polyester
7478	E-186A, E-221C	103	Liquidtight flex metal conduit	3503.08	4339.96	2479-1	72 Fiber, single mode fiber optic riser cable inside brown innerduct
						Black Innerduct	25.4 mm Smoothwall black innerduct
						Blue Innerduct	25.4 mm Smoothwall blue innerduct
						White Innerduct	25.4 mm Smoothwall white innerduct
7485	E-186A, E-221C	103	Liquidtight flex metal conduit	0.00	3275.44	Pull rope	Soft-fiber polyester
7486	E-186A, E-221C	103	Liquidtight flex metal conduit	0.00	3275.44	Pull rope	Soft-fiber polyester
7487	E-186A, E-221C	103	Liquidtight flex metal conduit	0.00	3275.44	Pull rope	Soft-fiber polyester
7488	E-186A, E-221C	103	Liquidtight flex metal conduit	0.00	3275.44	Pull rope	Soft-fiber polyester
7492	E-186A, E-221C	103	Liquidtight flex metal conduit	2628.48	3275.44	2391	3-1/C #4/0, 15 kV, EPR insulation
1T10	E-101A	305	152.4 mm siderail ladder tray	2628.48	8387.08	1391	3-1/C #4/0, 15 kV, EPR insulation

For continuation, see next sheet.

SHEET NOTES:

(1) (*) Conduit part of Pipe Beam, shown for information and cable routing. Contract 04-012024.

(**) Conduit in girder level, shown for information and cable routing. Contract 04-012024.

CONDUIT AND TRAY SCHEDULE

E-449A

CALCULATED/ DESIGNED BY	PBP	DATE 1/04	REVISED BY	EJL
CHECKED BY	EJL	2/04	DATE REVISED	2/04

DESIGN OVERSIGHT
BEHZAD GOLEMOHAMMADI

STATE OF CALIFORNIA - DEPARTMENT OF TRANSPORTATION
Caltrans

DRAFT 1 (03/01/11)

CONDUIT DATA

Conduit No	Reference	Size	Type	Total Fill (mm²)	Allowable Fill (mm²)	Included Cable No.	Conductor Type
1T20	E-101A	610	152.4 mm siderail ladder tray	0.00	18064.08		
1T40	E-101A	305	152.4 mm siderail ladder tray	3926.49 △1	8387.08	1473-10	50 pair #18, shielded pairs, IS/OS shield 600 V, XLPE insul., PVC jacket
						1474-10	50 pair #18, shielded pairs, IS/OS shield 600 V, XLPE insul., PVC jacket
						1477-2	72 Fiber, single mode fiber optic riser cable
						1475-3	72 Fiber, single mode fiber optic riser cable
					△1	1479-2	72 Fiber, single mode fiber optic riser cable inside brown innerduct
1T50	E-101A	610	152.4 mm siderail ladder tray	0.00	18064.08		
2T10	E-186A	305	152.4 mm siderail ladder tray	2628.48	8387.08	2391	3-1/C #4/0, 15 kV, EPR insulation
2T20	E-186A	610	152.4 mm siderail ladder tray	0.00	18064.08		
2T40	E-186A	305	152.4 mm siderail ladder tray	3602.84 △1	8387.08	2473-10	50 pair #18, shielded pairs, IS/OS shield 600 V, XLPE insul., PVC jacket
						2474-10	50 pair #18, shielded pairs, IS/OS shield 600 V, XLPE insul., PVC jacket
						2475-3	72 Fiber, single mode fiber optic riser cable
					△1	2479-1	72 Fiber, single mode fiber optic riser cable inside brown innerduct
2T50	E-186A	610	152.4 mm siderail ladder tray	0.00	18064.08		
** Conduit no. (see Project Note 8)	Skyway Structure WB	78	RGS conduit	1201.71	2564.19	1474-10	50 pair #18, shielded pairs, IS/OS shield 600 V, XLPE insul., PVC jacket
** Conduit no. (see Project Note 8)	Skyway Structure EB	78	RGS conduit	1201.71	2564.19	2474-10	50 pair #18, shielded pairs, IS/OS shield 600 V, XLPE insul., PVC jacket

REQUEST FOR INFORMATION NOT ADDRESSED IN THIS CCO REMAIN IN FORCE

MARK	DATE	DESCRIPTIONS	BY	CH'D	CCO#
△1	03/01/11	BASE INTEGRATION	RSB	WB	150

REVISIONS

CONTRACT CHANGE ORDER NO. 150
SHEET 36 OF 42

REGISTERED PROFESSIONAL ENGINEER SYN YEE CHIN No. 18186 Exp. 09/30/2011 ELECTRICAL STATE OF CALIFORNIA △1

Syn Yee Chin
FOR REVISION ONLY

Caltrans Metric

DIST	COUNTY	ROUTE	KILOMETER POST TOTAL PROJECT	SHEET No	TOTAL SHEETS
04	SF	80	13.2/13.9	406 R1	1204

REGISTERED ELECTRICAL ENGINEER 2/6/04 DATE

12-6-04
PLANS APPROVAL DATE

REGISTERED PROFESSIONAL ENGINEER JENS ERLINGSSON No. 8249 Exp. 9/30/06 ELECTRICAL STATE OF CALIFORNIA

PB POWER, Inc.
A Parsons Brinckerhoff Company
303 Second St., Suite 700N
San Francisco, CA 94107-1317

The State of California or its officers or agents shall not be responsible for the accuracy or completeness of electronic copies of this plan sheet.

Caltrans now has a web site! To get to the web site, go to http://www.dot.ca.gov

SHEET NOTES:

△1 (*) Conduit part of Pipe Beam, shown for information and cable routing. Contract 04-012024.

(**) Conduit in girder level, shown for information and cable routing. Contract 04-012024.

EJL	2/04	REVISED BY	DATE REVISED
DATE 1/04			
PBP	EJL	CALCULATED/ DESIGNED BY	CHECKED BY

DESIGN OVERSIGHT
BEHZAD GOLEMOHAMMADI

STATE OF CALIFORNIA - DEPARTMENT OF TRANSPORTATION
Caltrans

DRAFT 1 (03/01/11)

CONDUIT AND TRAY SCHEDULE

E-449B

LAST REVISION DATE PLOTTED => 25-FEB-2011

FOR REDUCED PLANS ORIGINAL 0 20 40 60 80 DGN FILE =>04-012of1 0406R01.dgn

DIST	COUNTY	ROUTE	KILOMETER POST TOTAL PROJECT	SHEET No	TOTAL SHEETS
04	SF	80	13.2/13.9	407 S6R3	1204

REGISTERED ELECTRICAL ENGINEER 6/12/08 DATE

PLANS APPROVAL DATE

REGISTERED PROFESSIONAL ENGINEER FADI WALIEDDINE No. 11465 Exp. 12/31/2009 ELECTRICAL STATE OF CALIFORNIA

PB AMERICAS, Inc.
A Parsons Brinckerhoff Company
303 Second St., Suite 700N
San Francisco, CA 94107-1317

The State of California or its officers or agents shall not be responsible for the accuracy or completeness of electronic copies of this plan sheet.

Caltrans now has a web site! To get to the web site, go to http://www.dot.ca.gov

Caltrans Metric

REGISTERED PROFESSIONAL ENGINEER SYN YEE CHIN No. 18186 Exp. 09/30/2011 ELECTRICAL STATE OF CALIFORNIA

Syn Yee Chin
FOR REVISION ONLY
1 2 3

REQUEST FOR INFORMATION NOT ADDRESSED IN THIS CCO REMAIN IN FORCE

MARK	DATE	DESCRIPTIONS	BY	CH'D	CCO#
3	03/01/11	BASE INTEGRATION	RSB	WB	150
2	01/07/11	ELECTRICAL WARNING SYSTEMS	TW	RG	61
1	03/26/10	DEHUMIDIFIER SCADA INTERFACE	TW	RG SYC	130
0	03/30/09	SERVICE PLATFORM ELECTRICAL CHANGES	RR RY	RG MP	55

REVISIONS

CONTRACT CHANGE ORDER NO. 150
SHEET 37 OF 42

CONDUIT DATA

Conduit No	Reference	Size	Type	Total Fill (mm²)	Allowable Fill (mm²)	Included Cable No.	Conductor Type
4211A	E-114B	78	RGS Conduit		1935.24	Pull rope	Soft-Fiber Polyester
4211B	E-114B	78	RGS Conduit		1935.24	Pull rope	Soft-Fiber Polyester
4211C	E-114B	78	RGS Conduit		1935.24	Pull rope	Soft-Fiber Polyester
4211D	E-114B	78	RGS Conduit	98.10	1935.24	Pull rope	Soft-Fiber Polyester
						1115-1	1-2PR #18 twisted shielded w/overall shield
4211E	E-114B	78	RGS Conduit		1935.24	Pull rope	Soft-Fiber Polyester
4211F	E-114B	78	RGS Conduit		1935.24	Pull rope	Soft-Fiber Polyester
4211G	E-114B	78	RGS Conduit		1935.24	Pull rope	Soft-Fiber Polyester
4211H	E-114B	78	RGS Conduit		1935.24	Pull rope	Soft-Fiber Polyester
4211J	E-114B	78	RGS Conduit		1935.24	Pull rope	Soft-Fiber Polyester
4211K	E-114B	78	RGS Conduit		1935.24	Pull rope	Soft-Fiber Polyester
4211L	E-114B	78	RGS Conduit		1935.24	Pull rope	Soft-Fiber Polyester
4211M	E-114B	78	RGS Conduit		1935.24	Pull rope	Soft-Fiber Polyester
4211N	E-114B	78	RGS Conduit		1935.24	Pull rope	Soft-Fiber Polyester
4211P	E-114B	78	RGS Conduit		1935.24	Pull rope	Soft-Fiber Polyester
4212A	E-116	78	RGS Conduit		1935.24	Pull rope	Soft-Fiber Polyester
4212B	E-116	78	RGS Conduit		1935.24	Pull rope	Soft-Fiber Polyester
4212C	E-116	78	RGS Conduit		1935.24	Pull rope	Soft-Fiber Polyester
4212D	E-116	78	RGS Conduit		1935.24	Pull rope	Soft-Fiber Polyester
4212E	E-116	78	RGS Conduit		1935.24	Pull rope	Soft-Fiber Polyester
4212F	E-116	78	RGS Conduit		1935.24	Pull rope	Soft-Fiber Polyester
4212G	E-116	78	RGS Conduit	2627.31	2564.19	1479-1	72 Fiber, single mode fiber optic riser cable inside brown innerduct
				3		1479-2	72 Fiber, single mode fiber optic riser cable inside white innerduct
						2479-1	72 Fiber, single mode fiber optic riser cable inside black innerduct
4212H	E-116	78	RGS Conduit	2627.31	2564.19	1481-2	12 Fiber, single mode fiber optic cable inside white innerduct
				3		Brown Innerduct	25.4 mm Smoothwall brown innerduct
						Black Innerduct	25.4 mm Smoothwall black innerduct
4213A	E-114B	78	RGS Conduit	2627.31	2564.19	1481-2	12 Fiber, single mode fiber optic cable inside white innerduct
				3		Brown Innerduct	25.4 mm Smoothwall brown innerduct
						Black Innerduct	25.4 mm Smoothwall black innerduct
4213B	E-114B	78	RGS Conduit		1935.24	Pull rope	Soft-Fiber Polyester
4213C	E-114B	78	RGS Conduit	2627.31	2564.19	1479-1	72 Fiber, single mode fiber optic riser cable inside brown innerduct
				3		1479-2	72 Fiber, single mode fiber optic riser cable inside white innerduct
						Black Innerduct	25.4 mm Smoothwall black innerduct
4213D	E-114B	78	RGS Conduit		1935.24	Pull rope	Soft-Fiber Polyester
4213E	E-114B	78	RGS Conduit		1935.24	Pull rope	Soft-Fiber Polyester
4213F	E-114B	78	RGS Conduit		1935.24	Pull rope	Soft-Fiber Polyester
4213G	E-114B	78	RGS Conduit	77.07	1935.24	Pull rope	Soft-Fiber Polyester
						1202-3A	1-2/C #14, 600 V, EPR Insulation

CONDUIT DATA

Conduit No	Reference	Size	Type	Total Fill (mm)	Allowable Fill (mm)	Included Cable No.	Conductor Type
4213H	E-114B	78	RGS Conduit		1935.24	Pull rope	Soft-Fiber Polyester
4213J	E-114B	78	RGS Conduit		1935.24	Pull rope	Soft-Fiber Polyester
4213K	E-114B	78	RGS Conduit		1935.24	Pull rope	Soft-Fiber Polyester
4213L	E-114B	78	RGS Conduit		1935.24	Pull rope	Soft-Fiber Polyester
4213M	E-114B	78	RGS Conduit		1935.24	Pull rope	Soft-Fiber Polyester
4213N	E-114B	78	RGS Conduit		1935.24	Pull rope	Soft-Fiber Polyester
4213P	E-114B	78	RGS Conduit		1935.24	Pull rope	Soft-Fiber Polyester
4214A	E-117	78	RGS Conduit		1935.24	Pull rope	Soft-Fiber Polyester
4214B	E-117	78	RGS Conduit		1935.24	Pull rope	Soft-Fiber Polyester
4214C	E-117	78	RGS Conduit		1935.24	Pull rope	Soft-Fiber Polyester
4214D	E-117	78	RGS Conduit		1935.24	Pull rope	Soft-Fiber Polyester
4214E	E-117	78	RGS Conduit		1935.24	Pull rope	Soft-Fiber Polyester
4214F	E-117	53	RGS Conduit		1935.24	Pull rope	Soft-Fiber Polyester
4214G	E-117	78	RGS Conduit		1935.24	Pull rope	Soft-Fiber Polyester
4214H	E-117	78	RGS Conduit		1935.24	Pull rope	Soft-Fiber Polyester

CONDUIT AND TRAY SCHEDULE

E-449DB

DATE	REVISED BY	DATE REVISED
	CALCULATED/ DESIGNED BY	CHECKED BY

DESIGN OVERSIGHT

STATE OF CALIFORNIA - DEPARTMENT OF TRANSPORTATION
Caltrans

DRAFT 1 (03/01/11)

LAST REVISION | DATE PLOTTED => 25-FEB-2011

FOR REDUCED PLANS ORIGINAL 0 20 40 60 80 | DGN FILE =>04-0120f1 0407S06R03.dgn

CONDUIT DATA

Conduit No	Reference	Size	Type	Total Fill (mm2)	Allowable Fill (mm2)	Included Cable No.	Conductor Type
5212A	E-114A	78	RGS Conduit		1935.24	Pull rope	Soft-Fiber Polyester
5212B	E-114A	53	RGS Conduit		1935.24	Pull rope	Soft-Fiber Polyester
5212C	E-114A	53	RGS Conduit		1935.24	Pull rope	Soft-Fiber Polyester
5212D	E-114A	78	RGS Conduit		1935.24	Pull rope	Soft-Fiber Polyester
5212E	E-114A	78	RGS Conduit		1935.24	Pull rope	Soft-Fiber Polyester
5212F	E-114A	78	RGS Conduit	554.94	1499.81	Pull rope	Soft-Fiber Polyester
						LP219-2	1-2/C + gnd #6, 600 V, EPR Insulation
						LP219-4	1-2/C + gnd #6, 600 V, EPR Insulation
5212G	E-114A	78	RGS Conduit		1935.24	Pull rope	Soft-Fiber Polyester
5212H	E-114A	78	RGS Conduit		1935.24	Pull rope	Soft-Fiber Polyester
5212J	E-114A	78	RGS Conduit		1935.24	Pull rope	Soft-Fiber Polyester
5212K	E-114A	78	RGS Conduit		1935.24	Pull rope	Soft-Fiber Polyester
5212L	E-114A	78	RGS Conduit		1935.24	Pull rope	Soft-Fiber Polyester
5212M	E-114A	78	RGS Conduit		1935.24	Pull rope	Soft-Fiber Polyester
5212N	E-114A	78	RGS Conduit		1935.24	Pull rope	Soft-Fiber Polyester
5212P	E-114A	78	RGS Conduit		1935.24	Pull rope	Soft-Fiber Polyester
5212Q	E-114A	78	RGS Conduit		1935.24	Pull rope	Soft-Fiber Polyester
5212R	E-114A	78	RGS Conduit		1935.24	Pull rope	Soft-Fiber Polyester
5212S	E-114A	78	RGS Conduit		1935.24	Pull rope	Soft-Fiber Polyester
5212T	E-114A	78	RGS Conduit		1935.24	Pull rope	Soft-Fiber Polyester
5212U	E-114A	78	RGS Conduit		1935.24	Pull rope	Soft-Fiber Polyester
5214A	E-115	78	RGS Conduit		1935.24	Pull rope	Soft-Fiber Polyester
5214B	E-115	78	RGS Conduit		1935.24	Pull rope	Soft-Fiber Polyester
5214C	E-115	78	RGS Conduit		1935.24	Pull rope	Soft-Fiber Polyester
5214D	E-115	78	RGS Conduit		1935.24	Pull rope	Soft-Fiber Polyester
5215A	E-114B	78	RGS Conduit	196.20	1935.24	Pull rope	Soft-Fiber Polyester
						2120-1	1-2PR #18 twisted shielded w/overall shield
						2121-1	1-2PR #18 twisted shielded w/overall shield
5215B	E-114B	78	RGS Conduit		1935.24	Pull rope	Soft-Fiber Polyester
5215C	E-114B	53	RGS Conduit		1935.24	Pull rope	Soft-Fiber Polyester
5215D	E-114B	78	RGS Conduit		1935.24	Pull rope	Soft-Fiber Polyester
5215E	E-114B	78	RGS Conduit		1935.24	Pull rope	Soft-Fiber Polyester
5215F	E-114B	78	RGS Conduit	1174.15	1935.24	Pull rope	Soft-Fiber Polyester
						LP220-2	1-2/C + gnd #6, 600 V, EPR Insulation
						LP220-4	1-2/C + gnd #6, 600 V, EPR Insulation
						1201-1	1-2/C + gnd #10, 600 V, EPR Insulation
						1201-2	1-2/C + gnd #10, 600 V, EPR Insulation
						1201-6	1-2/C + gnd #10, 600 V, EPR Insulation
						1201-4A	1-2/C #14, 600 V, EPR Insulation
						1201-4B	1-2/C #14, 600 V, EPR Insulation
						1201-4C	1-2/C #14, 600 V, EPR Insulation
5215G	E-114B	78	RGS Conduit		1935.24	Pull rope	Soft-Fiber Polyester
5215H	E-114B	78	RGS Conduit		1935.24	Pull rope	Soft-Fiber Polyester

REVISED BY | DATE | DATE REVISED

CALCULATED/DESIGNED BY | CHECKED BY

DESIGN OVERSIGHT

STATE OF CALIFORNIA - DEPARTMENT OF TRANSPORTATION

Caltrans

REQUEST FOR INFORMATION NOT ADDRESSED IN THIS CCO REMAIN IN FORCE

MARK	DATE	DESCRIPTIONS	BY	CH'D	CCO#
4	03/01/11	BASE INTEGRATION	RSB	WB	150
3	01/07/11	ELECTRICAL WARNING SYSTEMS	TW	RG	61
2	06/11/10	BIKE PATH CONDUIT	TW	RG	73
1	03/26/10	DEHUMIDIFIER SCADA INTERFACE	TW	RG SYC	130
0	03/30/09	SERVICE PLATFORM ELECTRICAL CHANGES	RR RY	RG FW	55

REVISIONS

CONTRACT CHANGE ORDER NO. 150
SHEET 38 OF 42

Caltrans Metric

REGISTERED PROFESSIONAL ENGINEER SYN YEE CHIN No. 16166 Exp. 09/30/2011 ELECTRICAL STATE OF CALIFORNIA

Syn Yee Chin
FOR REVISION ONLY
1 2 3 4

DIST	COUNTY	ROUTE	KILOMETER POST TOTAL PROJECT	SHEET No	TOTAL SHEETS
04	SF	80	13.2/13.9	407 S9R4	1204

REGISTERED ELECTRICAL ENGINEER 6/12/08 DATE

PLANS APPROVAL DATE

REGISTERED PROFESSIONAL ENGINEER FADI WALIEDDINE No. 11465 Exp. 12/31/2009 ELECTRICAL STATE OF CALIFORNIA

PB AMERICAS, Inc.
A Parsons Brinckerhoff Company
303 Second St., Suite 700N
San Francisco, CA 94107-1317

The State of California or its officers or agents shall not be responsible for the accuracy or completeness of electronic copies of this plan sheet.

Caltrans now has a web site! To get to the web site, go to http://www.dot.ca.gov

CONDUIT DATA

Conduit No	Reference	Size	Type	Total Fill (mm2)	Allowable Fill (mm2)	Included Cable No.	Conductor Type
5215J	E-114B	78	RGS Conduit		1935.24	Pull rope	Soft-Fiber Polyester
5215K	E-114B	78	RGS Conduit		1935.24	Pull rope	Soft-Fiber Polyester
5215L	E-114B	78	RGS Conduit		1935.24	Pull rope	Soft-Fiber Polyester
5215M	E-114B	78	RGS Conduit		1935.24	Pull rope	Soft-Fiber Polyester
5216A	E-116	78	RGS Conduit		1935.24	Pull rope	Soft-Fiber Polyester
5216B	E-116	78	RGS Conduit		1935.24	Pull rope	Soft-Fiber Polyester
5216C	E-116	78	RGS Conduit		1935.24	Pull rope	Soft-Fiber Polyester
5216D	E-116	78	RGS Conduit		1935.24	Pull rope	Soft-Fiber Polyester
5216E	E-116	78	RGS Conduit		1935.24	Pull rope	Soft-Fiber Polyester
5217A	E-114B	78	RGS Conduit		1935.24	Pull rope	Soft-Fiber Polyester
5217B	E-114B	78	RGS Conduit		1935.24	Pull rope	Soft-Fiber Polyester
5217C	E-114B	78	RGS Conduit	2627.31	2564.19	2479-1	72 Fiber, single mode fiber optic riser cable inside brown innerduct
				4		White Innerduct	25.4 mm Smoothwall white innerduct
						Black Innerduct	25.4 mm Smoothwall black innerduct
5217D	E-114B	78	RGS Conduit		1935.24	Pull rope	Soft-Fiber Polyester
5217E	E-114B	78	RGS Conduit		1935.24	Pull rope	Soft-Fiber Polyester
5217F	E-114B	78	RGS Conduit	738.73	1935.24	Pull rope	Soft-Fiber Polyester
						LP221-2	1-2/C + gnd #6, 600 V, EPR Insulation
						LP221-4	1-2/C + gnd #6, 600 V, EPR Insulation
						2202-3A	1-2/C #14, 600 V, EPR Insulation
						2202-1	1-2/C + gnd #10, 600 V, EPR Insulation
5217G	E-114B	78	RGS Conduit		1935.24	Pull rope	Soft-Fiber Polyester
5217H	E-114B	78	RGS Conduit		1935.24	Pull rope	Soft-Fiber Polyester
5217J	E-114B	78	RGS Conduit		1935.24	Pull rope	Soft-Fiber Polyester
5217K	E-114B	78	RGS Conduit		1935.24	Pull rope	Soft-Fiber Polyester
5217L	E-114B	78	RGS Conduit		1935.24	Pull rope	Soft-Fiber Polyester

CONDUIT AND TRAY SCHEDULE

E-449DE

LAST REVISION | DATE PLOTTED => 25-FEB-2011

FOR REDUCED PLANS ORIGINAL 0 20 40 60 80 | DGN FILE =>04-0120f1 0407S09R04.dgn

DIST	COUNTY	ROUTE	KILOMETER POST TOTAL PROJECT	SHEET No	TOTAL SHEETS
04	SF	80	13.2/13.9	407 S13R1	1204

REGISTERED ELECTRICAL ENGINEER — DATE 6/12/08

PLANS APPROVAL DATE

REGISTERED PROFESSIONAL ENGINEER — FADI WALIEDDINE No. 11465 Exp. 12/31/2009 ELECTRICAL — STATE OF CALIFORNIA

PB AMERICAS, Inc.
A Parsons Brinckerhoff Company
303 Second St., Suite 700N
San Francisco, CA 94107-1317

The State of California or its officers or agents shall not be responsible for the accuracy or completeness of electronic copies of this plan sheet.

Caltrans now has a web site!To get to the web site, go to http://www.dot.ca.gov

Caltrans Metric

REQUEST FOR INFORMATION NOT ADDRESSED IN THIS CCO REMAIN IN FORCE

MARK	DATE	DESCRIPTIONS	BY	CH'D	CCO#
1	03/01/11	BASE INTEGRATION	RSB	WB	150
0	03/30/09	SERVICE PLATFORM ELECTRICAL CHANGES	RR RY	RG MP	55

REVISIONS

CONTRACT CHANGE ORDER NO. 150
SHEET 39 OF 42

REGISTERED PROFESSIONAL ENGINEER — SYN YEE CHIN No. 18186 Exp. 09/30/2011 ELECTRICAL — STATE OF CALIFORNIA

1 Syn Yee Chin
FOR REVISION ONLY

CONDUIT DATA

Conduit No	Reference	Size	Type	Total Fill (mm²)	Allowable Fill (mm²)	Included Cable No.	Conductor Type
1T4WA	E-71, E-71A	203	203x203mm stainless steel wireway		8387.08		
1T4WA1	E-71, E71A	203	203x203mm stainless steel wireway		8387.08		
1T4WB	E-71, E71A	150	152x152 mm stainless steel wireway		4193.54		
1T4WB1	E-71, E71A	150	152x152 mm stainless steel wireway		4193.54		
1T5WA	E-72, E-72A	203	203x203mm stainless steel wireway		8387.08		
1T5WA1	E-72, E-72A	203	203x203mm stainless steel wireway		8387.08		
1T5WB	E-72, E-72A	150	152x152 mm stainless steel wireway		4193.54		
1T5WB1	E-72, E-72A	150	152x152 mm stainless steel wireway		4193.54		
1T6WA	E-73, E-73A	203	203x203mm stainless steel wireway		8387.08		
1T6WA1	E-73, E-73A	203	203x203mm stainless steel wireway		8387.08		
1T6WB	E-73, E-73A	150	152x152 mm stainless steel wireway	1001.14 1	4193.54	1479-1	72 Fiber, single mode fiber optic riser cable
						1479-2	72 Fiber, single mode fiber optic riser cable
						1481-2	12 Fiber, single mode fiber optic cable
						2479-1	72 Fiber, single mode fiber optic riser cable
1T6WB1	E-73, E-73A	150	152x152 mm stainless steel wireway	1001.14 1	4193.54	1479-1	72 Fiber, single mode fiber optic riser cable
						1479-2	72 Fiber, single mode fiber optic riser cable
					1	1481-2	12 Fiber, single mode fiber optic cable
						2479-1	72 Fiber, single mode fiber optic riser cable
1T7WA	E-74, E-74A	203	203x203mm stainless steel wireway		8387.08		
1T7WA1	E-74, E-74A	203	203x203mm stainless steel wireway		8387.08		
1T7WB	E-74, E-74A	150	152x152 mm stainless steel wireway		4193.54		
1T7WB1	E-74, E-74A	150	152x152 mm stainless steel wireway		4193.54		
1T8WA	E-75, E-75A	203	203x203mm stainless steel wireway		8387.08		
1T8WA1	E-75, E-75A	203	203x203mm stainless steel wireway		8387.08		
1T8WB	E-75, E-75A	150	152x152 mm stainless steel wireway		4193.54		
1T8WB1	E-75, E-75A	150	152x152 mm stainless steel wireway		4193.54		
2T4EA	E-71, E-71A	203	203x203mm stainless steel wireway		8387.08		
2T4EA1	E-71, E-71A	203	203x203mm stainless steel wireway		8387.08		
2T4EB	E-71, E-71A	150	152x152 mm stainless steel wireway		4193.54		
2T4EB1	E-71, E-71A	150	152x152 mm stainless steel wireway		4193.54		
2T5EA	E-72, E-72A	203	203x203mm stainless steel wireway		8387.08		
2T5EA1	E-72, E-72A	203	203x203mm stainless steel wireway		8387.08		

CONDUIT DATA

Conduit No	Reference	Size	Type	Total Fill (mm)	Allowable Fill (mm)	Included Cable No.	Conductor Type
2T5EB	E-72, E-72A	150	152x152 mm stainless steel wireway		4193.54		
2T5EB1	E-72, E-72A	150	152x152 mm stainless steel wireway		4193.54		
2T6EA	E-73, E-73A	203	203x203mm stainless steel wireway		8387.08		
2T6EA1	E-73, E-73A	203	203x203mm stainless steel wireway		8387.08		
2T6EB	E-73, E-73A	150	152x152 mm stainless steel wireway		4193.54		
2T6EB1	E-73, E-73A	150	152x152 mm stainless steel wireway		4193.54		
2T7EA	E-74, E-74A	203	203x203mm stainless steel wireway		8387.08		
2T7EA1	E-74, E-74A	203	203x203mm stainless steel wireway		8387.08		
2T7EB	E-74, E-74A	150	152x152 mm stainless steel wireway		4193.54		
2T7EB1	E-74, E-74A	150	152x152 mm stainless steel wireway		4193.54		
2T8EA	E-75, E-75A	203	203x203mm stainless steel wireway		8387.08		
2T8EA1	E-75, E-75A	203	203x203mm stainless steel wireway		8387.08		
2T8EB	E-75, E-75A	150	152x152 mm stainless steel wireway		4193.54		
2T8EB1	E-75, E-75A	150	152x152 mm stainless steel wireway		4193.54		

CONDUIT AND TRAY SCHEDULE

E-449DJ

DATE XXX	XXX	CALCULATED/ DESIGNED BY	XXX
XXX	XXX	CHECKED BY	XXX
REVISED BY		DESIGN OVERSIGHT	
DATE REVISED		XXXXXXXXXX	

STATE OF CALIFORNIA - DEPARTMENT OF TRANSPORTATION
Caltrans

DRAFT 1 (03/01/11)

LAST REVISION | DATE PLOTTED => 25-FEB-2011

FOR REDUCED PLANS ORIGINAL 0 20 40 60 80 | DGN FILE =>04-0120f1 0407S13R01.dgn

CONDUIT DATA

Conduit No	Reference	Size	Type	Total Fill (mm²)	Allowable Fill (mm²)	Included Cable No.	Conductor Type
0T45	E-115	610	152.4 mm siderail ladder tray		16774.16		
1T45A	E-114B, E-115	610	152.4 mm siderail ladder tray		16774.16		
1T45B	E-114B	610	152.4 mm siderail ladder tray		16774.16		
2T45	E-114B	610	152.4 mm siderail ladder tray		16774.16		
2T45A	E-114B, E-115	610	152.4 mm siderail ladder tray		16774.16		
2T45B	E-114B	610	152.4 mm siderail ladder tray		16774.16		
0T46	E-116	610	152.4 mm siderail ladder tray	875.77	16774.16	2479-1	72 Fiber, single mode fiber optic riser cable inside brown innerduct
1T46A	E-114A, E-116	610	152.4 mm siderail ladder tray	3503.08	16774.16	1479-1	72 Fiber, single mode fiber optic riser cable inside brown innerduct
						1479-2	72 Fiber, single mode fiber optic riser cable inside brown innerduct
						1481-2	12 Fiber, single mode fiber optic cable inside brown innerduct
						2479-1	72 Fiber, single mode fiber optic riser cable inside brown innerduct
1T46B	E-114,E-114A,B	610	152.4 mm siderail ladder tray	2627.31	16774.16	1479-1	72 Fiber, single mode fiber optic riser cable inside brown innerduct
			1		1	1479-2	72 Fiber, single mode fiber optic riser cable inside brown innerduct
						1481-2	12 Fiber, single mode fiber optic cable inside brown innerduct
2T46A	E-114B, E-116	610	152.4 mm siderail ladder tray	875.77	16774.16	2479-1	72 Fiber, single mode fiber optic riser cable inside brown innerduct
2T46B	E-114	610	152.4 mm siderail ladder tray	875.77	16774.16	2479-1	72 Fiber, single mode fiber optic riser cable inside brown innerduct
0T47	E-117	610	152.4 mm siderail ladder tray		16774.16		
1T47A	E-117	610	152.4 mm siderail ladder tray		16774.16		
1T47B	E-114	610	152.4 mm siderail ladder tray		16774.16		
2T47A	E-114B, E-117	610	152.4 mm siderail ladder tray		16774.16		
2T47B	E-114B	610	152.4 mm siderail ladder tray		16774.16		
0T48	E-118	610	152.4 mm siderail ladder tray		16774.16		
1T48A	E-118	610	152.4 mm siderail ladder tray		16774.16		
2T48A	E-114B, E-118	610	152.4 mm siderail ladder tray		16774.16		
2T48B	E-118	610	152.4 mm siderail ladder tray		16774.16		

REQUEST FOR INFORMATION NOT ADDRESSED IN THIS CCO REMAIN IN FORCE

MARK	DATE	DESCRIPTIONS	BY	CH'D	CCO#
1	03/01/11	BASE INTEGRATION	RSB	WB	150
0	03/30/09	SERVICE PLATFORM ELECTRICAL CHANGES	RR RY	RG MP	55

REVISIONS

CONTRACT CHANGE ORDER NO. 150
SHEET 40 OF 42

REGISTERED PROFESSIONAL ENGINEER SYN YEE CHIN No. 18186 Exp. 09/30/2011 ELECTRICAL STATE OF CALIFORNIA

1 Syn Yee Chin
FOR REVISION ONLY

DIST	COUNTY	ROUTE	KILOMETER POST TOTAL PROJECT	SHEET No	TOTAL SHEETS
04	SF	80	13.2/13.9	407 S15R1	1204

REGISTERED ELECTRICAL ENGINEER — 6/12/08 DATE

REGISTERED PROFESSIONAL ENGINEER FADI WALIEDDINE No. 11465 Exp. 12/31/2009 ELECTRICAL STATE OF CALIFORNIA

PLANS APPROVAL DATE

PB AMERICAS, Inc.
A Parsons Brinckerhoff Company
303 Second St., Suite 700N
San Francisco, CA 94107-1317

The State of California or its officers or agents shall not be responsible for the accuracy or completeness of electronic copies of this plan sheet.

Caltrans now has a web site! To get to the web site, go to http://www.dot.ca.gov

CONDUIT DATA

Conduit No	Reference	Size	Type	Total Fill (mm)	Allowable Fill (mm)	Included Cable No.	Conductor Type

CONDUIT AND TRAY SCHEDULE

E-449DL

DATE XXX	XXX	REVISED BY	XXX	XXX
				DATE REVISED

CALCULATED/DESIGNED BY XXX — CHECKED BY XXX

DESIGN OVERSIGHT — BEHZAD GOLEMOHAMMADI

STATE OF CALIFORNIA - DEPARTMENT OF TRANSPORTATION

DRAFT 1 (03/01/11)

LAST REVISION — DATE PLOTTED => 25-FEB-2011

FOR REDUCED PLANS ORIGINAL 0 20 40 60 80 — DGN FILE =>04-0120f1 0407S15R01.dgn

DIST	COUNTY	ROUTE	KILOMETER POST TOTAL PROJECT	SHEET No	TOTAL SHEETS
04	SF, Ala	80	12.2/14.3 0.0/4.0	407a 11S01	1204

Syn Yee Chin 2/25/11
REGISTERED ELECTRICAL ENGINEER DATE

REGISTERED PROFESSIONAL ENGINEER SYN YEE CHIN No. 18186 Exp. 09/30/2011 ELECTRICAL STATE OF CALIFORNIA

PLANS APPROVAL DATE

PB AMERICAS, Inc.
A Parsons Brinckerhoff Company
303 Second St., Suite 700N
San Francisco, CA 94107-1317

The State of California or its officers or agents shall not be responsible for the accuracy or completeness of electronic copies of this plan sheet.

Caltrans now has a web site! To get to the web site, go to http://www.dot.ca.gov

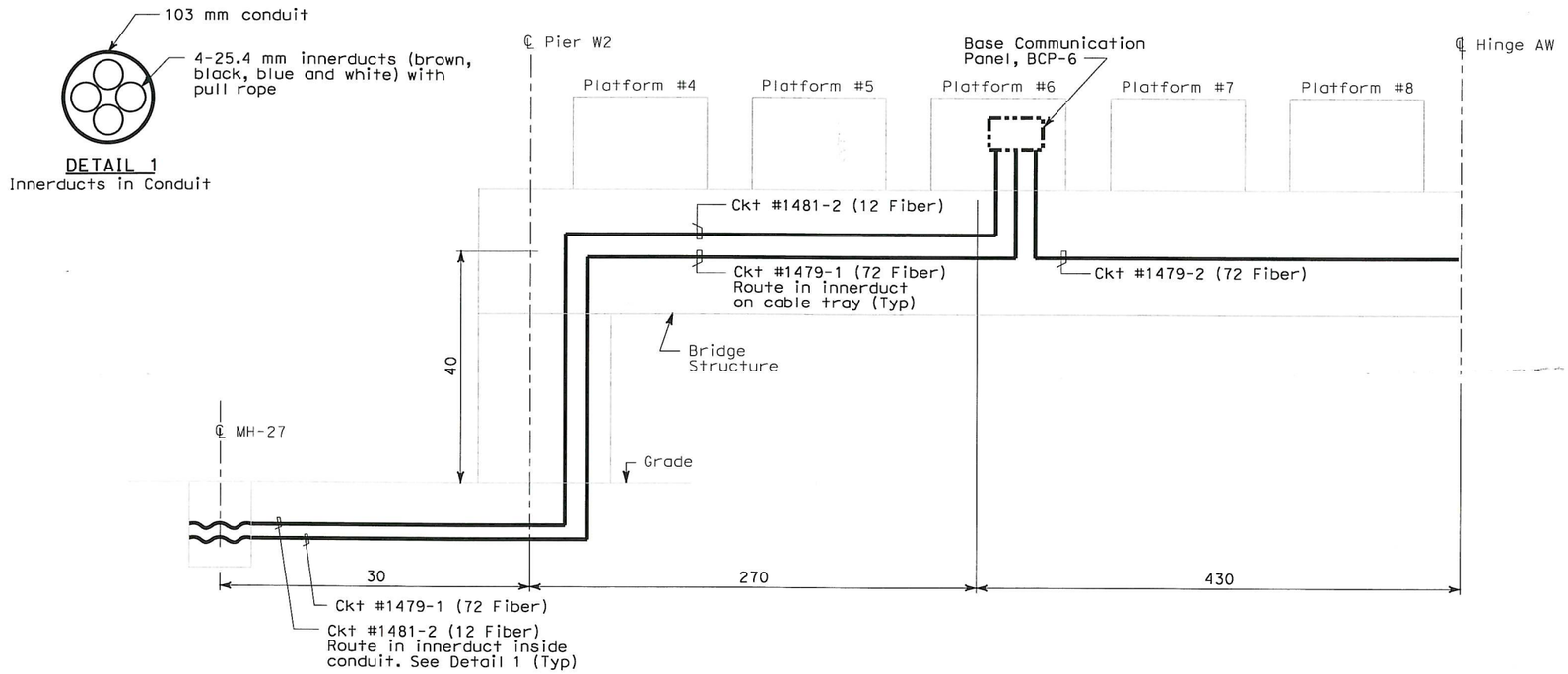

NOTES:

1. Dimensions shown are for reference only. Contractor shall not use the dimensions to cut cables.
2. All innerducts shall be furnished with a pull rope. Contractor to pull additional replacement rope along with cable pulls unless otherwise noted (no replacement rope needed for 72 Fiber cable pull). All innerducts on cable tray shall be color brown.
3. BASE fiber optic cable insulation shall be color brown. Coil and tape 7 meters of cable per circuit inside BCP-6 for future termination.

REQUEST FOR INFORMATION NOT ADDRESSED IN THIS CCO REMAIN IN FORCE

MARK	DATE	DESCRIPTIONS	BY	CH'D	CCO#
0	03/01/11	BASE INTEGRATION	RSB	WB	150

REVISIONS

CONTRACT CHANGE ORDER NO. 150
SHEET 41 OF 42

BASE SYSTEM
FIBER OPTICS BLOCK DIAGRAM
SAS SUPERSTRUCTURE-WESTBOUND

NO SCALE

E-1100

DATE	REVISED BY	DATE	REVISED BY
10/10	RSB	10/10	WB

CALCULATED/DESIGNED BY
CHECKED BY

DESIGN OVERSIGHT
BEHZAD GOLEMOHAMMADI

STATE OF CALIFORNIA - DEPARTMENT OF TRANSPORTATION
Caltrans

DRAFT 1 (03/01/11)

THIS PLAN ACCURATE FOR ELECTRICAL WORK ONLY.

ALL DIMENSIONS ARE IN METERS UNLESS OTHERWISE SHOWN

FOR REDUCED PLANS ORIGINAL SCALE IS IN MILLIMETERS 0 20 40 60 80

DGN FILE =>I:\13103\MS\pse\MEP\MEP SAS CCO 150\Draft 2 - 2011.03.01 Submittal\04-0120f1_E-1100.dgn
USERNAME =>garciar

CU 04251 EA 0120F1

LAST REVISION 00-00-00
DATE PLOTTED => 3/1/2011
TIME PLOTTED => 9:41:10 AM

DIST	COUNTY	ROUTE	KILOMETER POST TOTAL PROJECT	SHEET No	TOTAL SHEETS
04	SF, Ala	80	12.2/14.3 0.0/4.0	407a 11S02	1204

Syn Yee Chin 2/25/11
REGISTERED ELECTRICAL ENGINEER DATE

REGISTERED PROFESSIONAL ENGINEER
SYN YEE CHIN
No. 18186
Exp. 09/30/2011
ELECTRICAL
STATE OF CALIFORNIA

PLANS APPROVAL DATE

PB AMERICAS, Inc.
A Parsons Brinckerhoff Company
303 Second St., Suite 700N
San Francisco, CA 94107-1317

The State of California or its officers or agents shall not be responsible for the accuracy or completeness of electronic copies of this plan sheet.

Caltrans now has a web site! To get to the web site, go to http://www.dot.ca.gov

Caltrans Metric

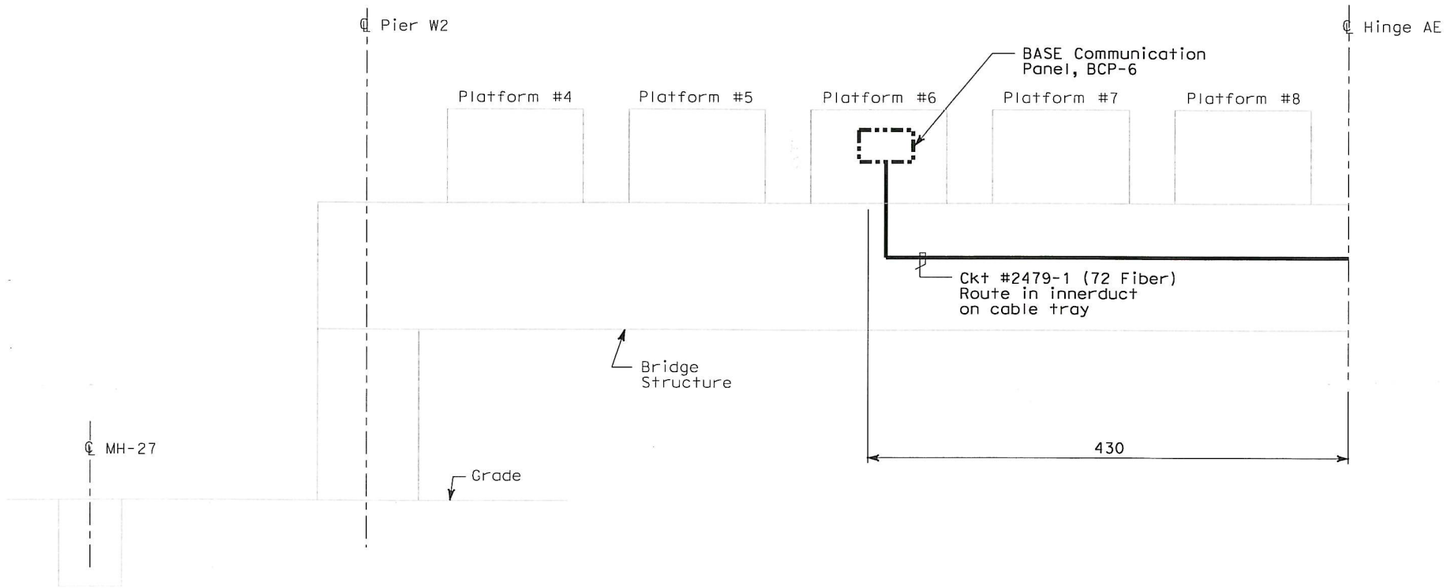

NOTES:

1. Dimensions shown are for reference only. Contractor shall not use the dimensions to cut cables.
2. All innerducts shall be furnished with a pull rope. Contractor to pull additional replacement rope along with cable pulls unless otherwise noted (no replacement rope needed for 72 Fiber cable pull). All innerducts on cable tray shall be color brown.
3. BASE fiber optic cable insulation shall be color brown. Coil and tape 7 meters of cable per circuit inside BCP-6 for future termination.

REQUEST FOR INFORMATION NOT ADDRESSED IN THIS CCO REMAIN IN FORCE

MARK	DATE	DESCRIPTIONS	BY	CH'D	CCO#
0	03/01/11	BASE INTEGRATION	RSB	WB	150

REVISIONS

CONTRACT CHANGE ORDER NO. 150
SHEET 42 OF 42

BASE SYSTEM
FIBER OPTICS BLOCK DIAGRAM
SAS SUPERSTRUCTURE-EASTBOUND

NO SCALE

E-1101

DATE	REVISED BY	DATE	CALCULATED/DESIGNED BY	RSB
10/10	DATE REVISED	10/10	CHECKED BY	WB

DESIGN OVERSIGHT
BEHZAD GOLEMOHAMMADI

STATE OF CALIFORNIA - DEPARTMENT OF TRANSPORTATION
Caltrans

DRAFT 1 (03/01/11)

THIS PLAN ACCURATE FOR ELECTRICAL WORK ONLY.

All dimensions are in meters unless otherwise shown.

FOR REDUCED PLANS ORIGINAL SCALE IS IN MILLIMETERS 0 20 40 60 80

DGN FILE =>I:\13103\MS\pse\MEP\MEP SAS CCO 150\Draft 2 - 2011.03.01 Submittal\04-0120f1_E-1101.dgn
USERNAME =>garciar

CU 04251 EA 0120F1

LAST REVISION 00-00-00
DATE PLOTTED => 3/1/2011
TIME PLOTTED => 9:44:18 AM