DIST.	COUNTY	ROUTE	KILOMETER POST TOTAL PROJECT	SHEET NO.	TOTAL SHEETS
04	SF	80	13.2/13.9	646R5	1204

Caltrans Metric

George Baker
REGISTERED ENGINEER - CIVIL
12-6-04
PLANS APPROVAL DATE

REGISTERED PROFESSIONAL ENGINEER George S. Baker No. C57112 Exp. 12/31/05 CIVIL STATE OF CALIFORNIA

The State of California or its officers or agents shall not be responsible for the accuracy or completeness of electronic copies of this plan sheet.

T.Y. LIN / MOFFATT & NICHOL
825 BATTERY STREET
SAN FRANCISCO, CA 94111

Caltrans now has a web site! To get to the web site, go to: http://www.dot.ca.gov

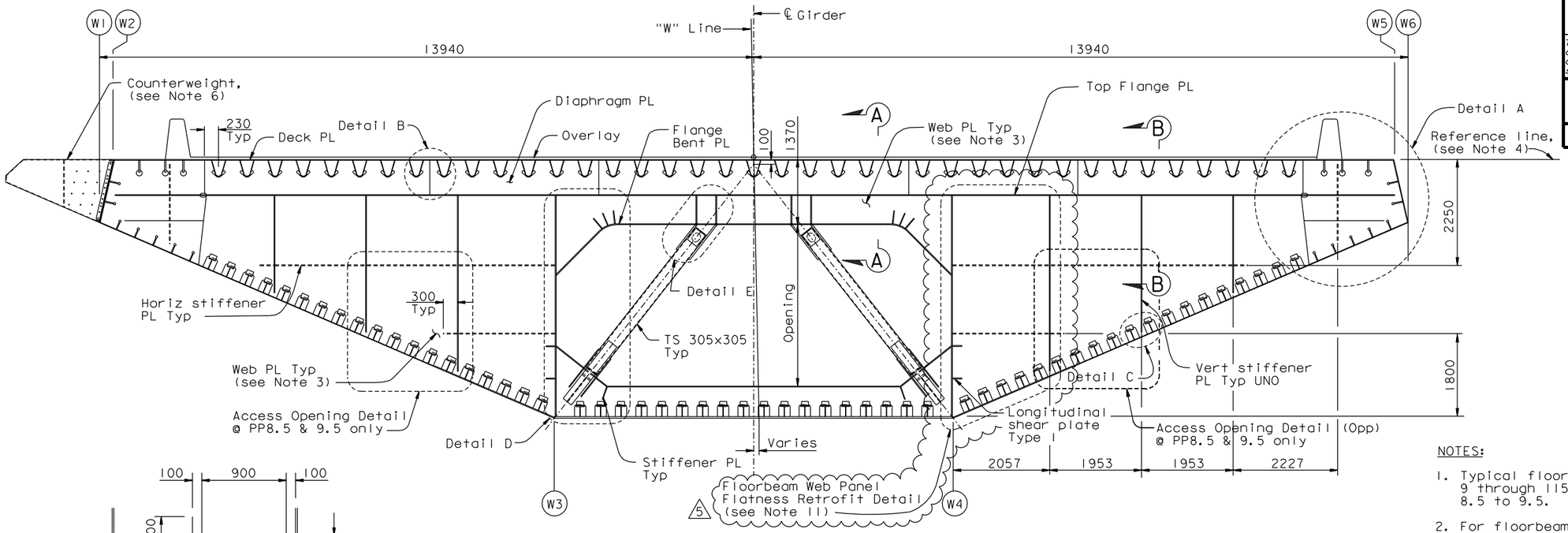

"W" LINE

TYPICAL FLOORBEAM SECTION (See Note 1)

1:50

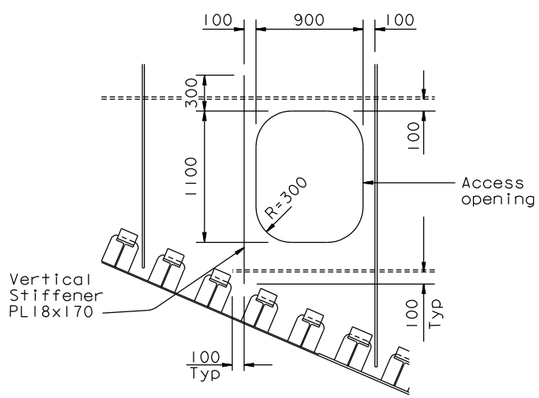

ACCESS OPENING DETAIL

(PP9.5 shown, PP8.5 similar)

NOTES:

1. Typical floorbeam is located at Panel Points 9 through 115 and intermediate Panel Points 8.5 to 9.5.
2. For floorbeam at intermediate Panel Points 10.5, 11.5, 12.5, 13.5, 111.5, 112.5, 113.5, 114.5, 115.2 and 115.5, see "Typical Floorbeam Details No.8" sheet.
3. For extents and thickness of floorbeam web, see "Typical Floorbeam Details No.2" sheet.
4. All dimensions are taken with respect to a reference line tangent to top deck plate.
5. For Sections A-A and B-B and Details B and C, see "Typical Floorbeam Details No.4" sheet.
6. For counterweight details, see "Typical Girder Details No.17" sheet.
7. For "Typical Floorbeam Details" sheets all bolts shall be detailed according to the bolt dimension table. See "Typical Girder Details No.1" sheet. All bolts are HS, unless noted otherwise.
8. For "Typical Floorbeam Details" sheets unless noted otherwise all fillet welds shall be 6 mm for plate sizes not greater than 20 mm. For plates greater than 20 mm fillet welds shall be 8 mm unless noted otherwise.
9. For Detail A, see "Typical Floorbeam Details No.3" sheet.
10. For Details D and E, see "Typical Floorbeam Details No.5" sheet.
11. (5) For web PL "Floorbeam Web Panel Flatness Retrofit Detail" for out-of-tolerance floorbeam web panels (E & W Lines), see "Typical Floorbeam Details No.4A" sheet.

Daniel J. Turner
REGISTERED PROFESSIONAL ENGINEER Daniel J. Turner No. C 65033 Exp. 06/30/13 CIVIL STATE OF CALIFORNIA

FOR REVISIONS ONLY

REVISION (4) RESCINDS REVISION (2) & (3)

CONTRACT CHANGE ORDER NO. _____
SHEET ____ OF ____

REQUESTS FOR INFORMATION NOT ADDRESSED IN THIS CCO REMAIN IN FORCE

MARK	DATE	DESCRIPTIONS	BY	CH'D	CCO#
5	07/14/11	FLOORBEAM DIAPHRAGM	GB	DT	143
4	04/08/09	GRINDING OBG DECK PLATES	AS	DT	53
3	04/30/08	GRINDING OBG DECK PLATES	AS	DT	53
2	01/22/08	GRINDING OBG DECK PLATES	AS	DT	53
1	02/16/07	BULKHEAD AT GIRDER PIER W2	AS	DT	27

REVISIONS

ALL DIMENSIONS ARE IN MILLIMETERS UNLESS OTHERWISE SHOWN

R. Valizadeh/V. Toan/Y.L./W.L./F.C.
DESIGN OVERSIGHT
Roya Valizadeh / Vonn Toan / Y. Liu
SIGN OFF DATE 07/14/11

Rev. Date: 5-18-98

	BY	CHECKED
DESIGN	G. Baker	P. Ritchie
DETAILS	S. Camo	T. McMeans
QUANTITIES	C. Mauch	M. Roberts

PREPARED FOR THE STATE OF CALIFORNIA DEPARTMENT OF TRANSPORTATION

R. Manzanarez
PROJECT ENGINEER

BRIDGE NO. 34-0006L/R
KILOMETER POST 13.2/13.9

SAN FRANCISCO OAKLAND BAY BRIDGE
EAST SPAN SEISMIC SAFETY PROJECT
SELF-ANCHORED SUSPENSION BRIDGE
(SUPERSTRUCTURE & TOWER)

TYPICAL FLOORBEAM DETAILS NO.1

ORIGINAL SCALE IN MILLIMETERS FOR REDUCED PLANS 0 10 20 30 40 50 60 70 80 90 100

CU 04
EA 0120F1

DISREGARD PRINTS BEARING EARLIER REVISION DATES

REVISION DATES (PRELIMINARY STAGE ONLY) 01/15/99 05/15/99 08/02/99 05/31/01 04/08/02 07/01/02 12/19/02

SHEET 229R5 OF

FILE => I:\bb\04-012001\sas\contract plans and cco\cco\cco#143\1-original 07-14-11\dgn\agftb01.dgn

USERNAME => DWinrow DATE PLOTTED => 14 JUL 2011 TIME PLOTTED => 13:17:15

100 % PS&E

DIST.	COUNTY	ROUTE	KILOMETER POST TOTAL PROJECT	SHEET NO.	TOTAL SHEETS
04	SF	80	13.2/13.9	649S1	1204

REGISTERED ENGINEER - CIVIL

08-02-11

PLANS APPROVAL DATE

The State of California or its officers or agents shall not be responsible for the accuracy or completeness of electronic copies of this plan sheet.

REGISTERED PROFESSIONAL ENGINEER Marwan N. Nader No. C 054426 Exp. 12/31/11 CIVIL STATE OF CALIFORNIA

T.Y. LIN / MOFFATT & NICHOL
825 BATTERY STREET
SAN FRANCISCO, CA 94111

Caltrans now has a web site! To get to the web site, go to: http://www.dot.ca.gov

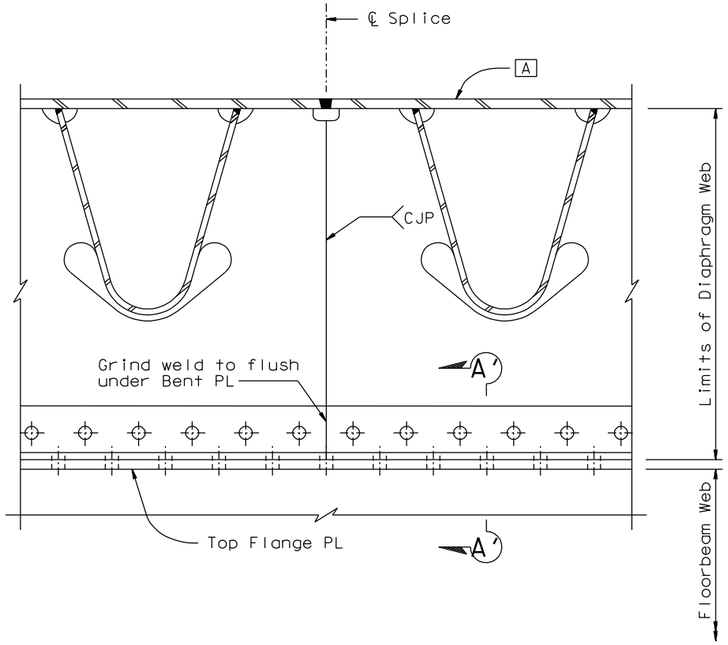

DIAPHRAGM RETROFIT DETAIL (See Notes 1 and 4)

1:5

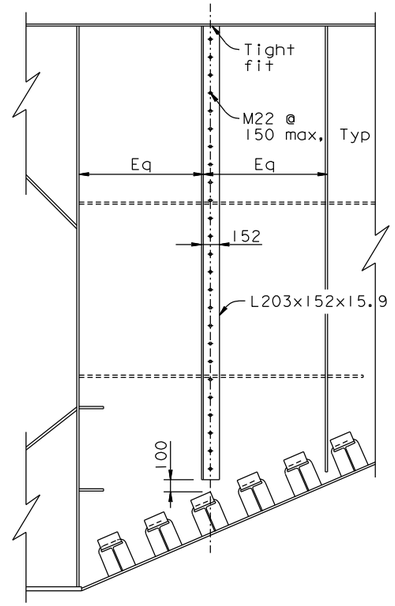

FLOORBEAM WEB PANEL FLATNESS RETROFIT DETAIL (See Note 3)

1:25

NOTES:

1. Floorbeam diaphragm web plate distortion resulting from fabrication methods and application of heat straightening shall be repaired following the guidelines provided in "Heat Distortion Repair Criteria for Diaphragm Plate" Table below, the "Diaphragm Retrofit Detail" and the "Floorbeam Web Panel Flatness Retrofit Detail" provided on this sheet. Approval of the Engineer is required prior to repair.

TABLE: Heat Distortion Repair Criteria for Diaphragm Plate (See Note 4)

CASE	DISTORTION RANGE (△)	APPLY HEAT STRAIGHTENING	APPLY DIAPHRAGM RETROFIT DETAIL	ADDITIONAL 100% NDT
A	△ > 30 mm *	Required to bring △ to less than 30 mm	Pending results of heat- straightening, see Case B or C	Required
B	10 mm < △ ≤ 30 mm	Optional in lieu of Diaphragm Retrofit	Required if not heat-straightened	Required if heat straightened
C	△ ≤ 10	Not required	Not required	Not required

* △ > 30 mm is not acceptable in the final condition.

2. Radius of Bent PL may be increased to clear additional weld reinforcement, if any.
3. The "Floorbeam Web Panel Flatness Retrofit Detail" shall be used to correct out-of-tolerance floorbeam web panel flatness as directed by the Engineer.
4. Retrofit applicable only when diaphragm to web misalignment "e" at floorbeams is within the specified tolerance, see "Typical Floorbeam Details No. 9" sheet. For "e" outside tolerances, retrofit shall be as directed by the Engineer.

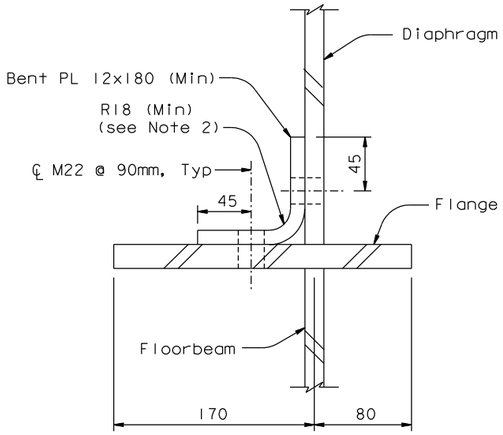

SECTION A'-A'

1:2.5

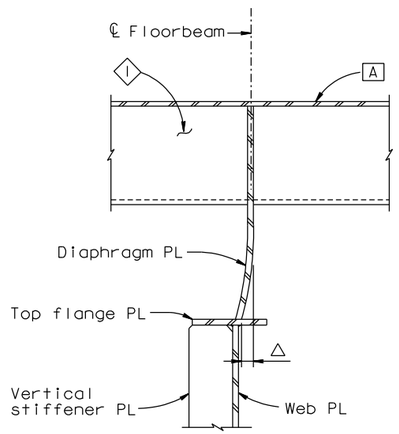

DISTORTION MEASUREMENT "△"

NTS

CONTRACT CHANGE ORDER NO. _____
SHEET ____ OF ____

REQUESTS FOR INFORMATION NOT ADDRESSED IN THIS CCO REMAIN IN FORCE

ALL DIMENSIONS ARE IN MILLIMETERS UNLESS OTHERWISE SHOWN

R. Valizadeh/V. Toan/Y.L./W.L./F.C.
DESIGN OVERSIGHT
SIGN OFF DATE 08/02/11

MARK	DATE	DESCRIPTIONS	BY	CH'D	CCO#
0	08/02/11	FLOORBEAM DIAPHRAGM	GB	MN	143

REVISIONS

DESIGN	BY G. Baker	CHECKED M. Nader	
DETAILS	BY G. Baker	CHECKED M. Nader	
QUANTITIES	BY G. Baker	CHECKED M. Nader	

PREPARED FOR THE STATE OF CALIFORNIA DEPARTMENT OF TRANSPORTATION

R. Manzanarez
PROJECT ENGINEER

BRIDGE NO. 34-0006L/R
KILOMETER POST 13.2/13.9

SAN FRANCISCO OAKLAND BAY BRIDGE
EAST SPAN SEISMIC SAFETY PROJECT
SELF-ANCHORED SUSPENSION BRIDGE
(SUPERSTRUCTURE & TOWER)

TYPICAL FLOORBEAM DETAILS NO. 4A

Rev. Date: 5-18-98

ORIGINAL SCALE IN MILLIMETERS FOR REDUCED PLANS 0 10 20 30 40 50 60 70 80 90 100

CU 04
EA 0120F1

DISREGARD PRINTS BEARING EARLIER REVISION DATES 08/02/11

REVISION DATES (PRELIMINARY STAGE ONLY)

SHEET 232S1 OF

FILE => L:\BB\04-012001\SAS\Contract Plans and CCO\CCO\CCO#143\3-Update 08-02-11\DGN\agftb06a.dgn

100% PS&E

USERNAME => arivera DATE PLOTTED => 02 AUG 2011 TIME PLOTTED => 09:45:52

DIST.	COUNTY	ROUTE	KILOMETER POST TOTAL PROJECT	SHEET NO.	TOTAL SHEETS
04	SF	80	13.2/13.9	654R1	1204

Caltrans Metric

George Baker
REGISTERED ENGINEER - CIVIL
1-27-03
PLANS APPROVAL DATE

REGISTERED PROFESSIONAL ENGINEER George S. Baker No. C57112 Exp. 12/31/05 CIVIL STATE OF CALIFORNIA

The State of California or its officers or agents shall not be responsible for the accuracy or completeness of electronic copies of this plan sheet.

T.Y. LIN / MOFFATT & NICHOL
825 BATTERY STREET
SAN FRANCISCO, CA 94111

Caltrans now has a web site! To get to the web site, go to: http://www.dot.ca.gov

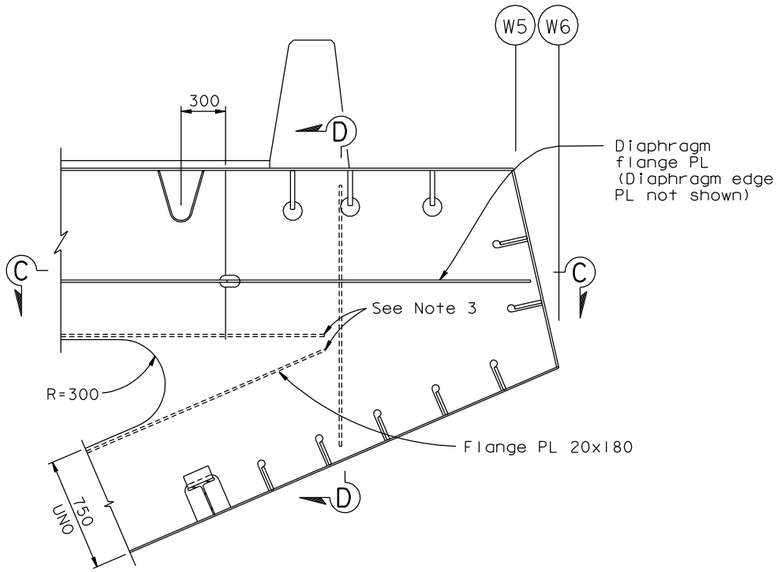

DETAIL A
1:20

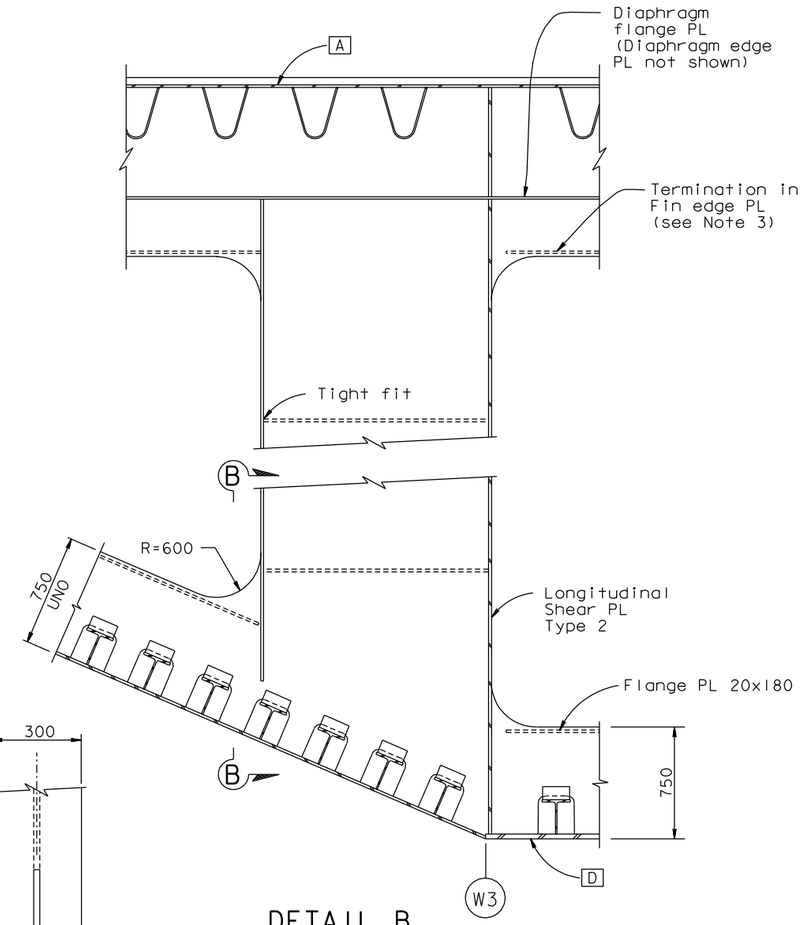

DETAIL B
1:20

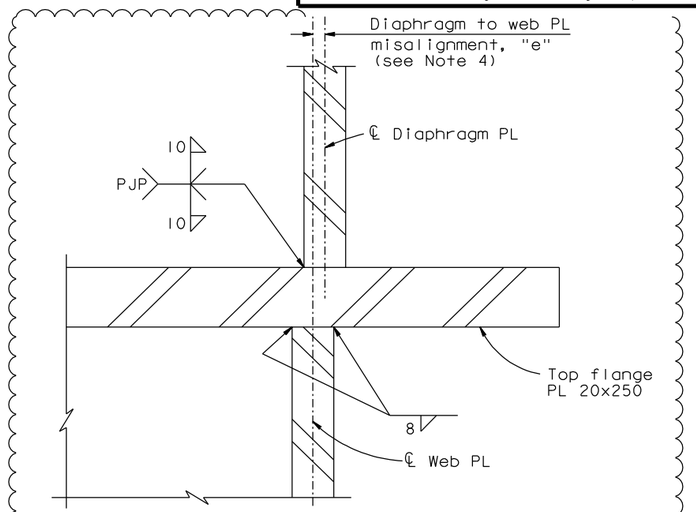

ALTERNATE DIAPHRAGM TO FLOORBEAM WELD DETAIL
AT FLOORBEAMS AND INTERMEDIATE FLOORBEAMS
AT EAST TRANSITION

DETAIL C (See Note 4)
NTS

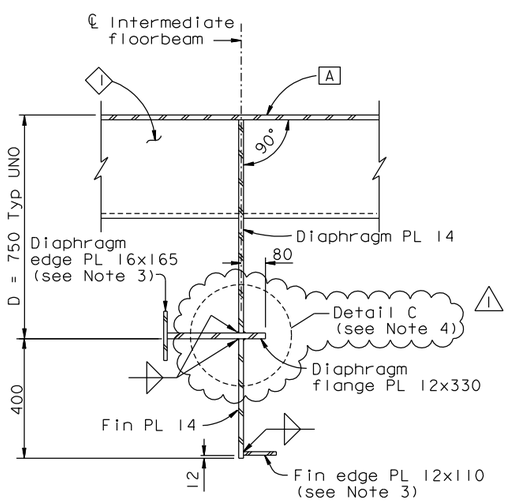

SECTION A-A (See Note 2)
1:10

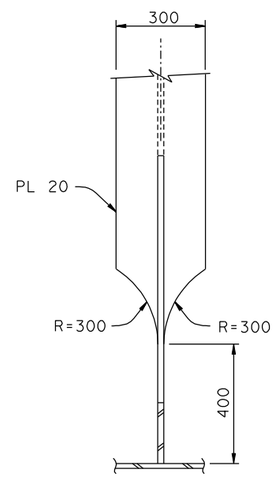

SECTION B-B
1:10

LEGEND:

D - Depth of diaphragm from top surface of girder face A to underside of diaphragm flange plate

NOTES:

1. For Sections C-C and D-D, see "Typical Floorbeam Details No. 3" sheet.
2. Section A-A is typical at all floorbeams that do not have Chevrons, including floorbeams in east transition. For these locations, see "Floorbeam At East Transition" sheets and Detail C.
3. For termination of diaphragm edge plate and fin edge plate, see "Typical Girder Details No. 16" sheet.
4. The alternate weld detail for diaphragm to floorbeam web connection shown in Detail C is acceptable on a fit-for-purpose basis to allow an increase in diaphragm to web plate misalignment, "e", of up to 10 mm at floorbeams and intermediate floorbeams in east transition spans.

REGISTERED PROFESSIONAL ENGINEER Marwan N. Nader No. C 054426 Exp. 12/31/11 CIVIL STATE OF CALIFORNIA

FOR REVISIONS ONLY

CONTRACT CHANGE ORDER NO. _____
SHEET ___ OF ___

REQUESTS FOR INFORMATION NOT ADDRESSED IN THIS CCO REMAIN IN FORCE

ALL DIMENSIONS ARE IN MILLIMETERS UNLESS OTHERWISE SHOWN

MARK	DATE	DESCRIPTIONS	BY	CH'D	CCO#
1	08/02/11	FLOORBEAM DIAPHRAGM	GB	MN	143

REVISIONS

R. Valizadeh/V. Toan/Y.L./W.L./F.C.
DESIGN OVERSIGHT
SIGN OFF DATE 08/02/11

DESIGN	BY G. Baker	CHECKED P. Ritchie	
DETAILS	BY S. Camo	CHECKED T. McMeans	
QUANTITIES	BY C. Mauch	CHECKED M. Roberts	

PREPARED FOR THE STATE OF CALIFORNIA DEPARTMENT OF TRANSPORTATION

R. Manzanarez
PROJECT ENGINEER

BRIDGE NO. 34-0006L/R
KILOMETER POST 13.2/13.9

SAN FRANCISCO OAKLAND BAY BRIDGE
EAST SPAN SEISMIC SAFETY PROJECT
SELF-ANCHORED SUSPENSION BRIDGE
(SUPERSTRUCTURE & TOWER)

TYPICAL FLOORBEAM DETAILS NO. 9

Rev. Date: 5-18-98

ORIGINAL SCALE IN MILLIMETERS FOR REDUCED PLANS 0 10 20 30 40 50 60 70 80 90 100

CU 04
EA 0120F1

DISREGARD PRINTS BEARING EARLIER REVISION DATES

REVISION DATES (PRELIMINARY STAGE ONLY) 01/15/99 05/13/99 08/06/99 05/31/01 04/26/02 07/01/02 12/19/02

SHEET 237R1 OF

FILE => I:\bb\04-012001\sas\contract plans and cco\cco\cco#143\3-update 08-02-11\dgn\agftb08.dgn

USERNAME => arivera DATE PLOTTED => 02 AUG 2011 TIME PLOTTED => 09:44:36

100 % PS&E