DIST.	COUNTY	ROUTE	KILOMETER POST TOTAL PROJECT	SHEET NO.	TOTAL SHEETS
04	SF	80	13.2/13.9	654R1	1204

Caltrans Metric

George Baker
REGISTERED ENGINEER - CIVIL
1-27-03
PLANS APPROVAL DATE

REGISTERED PROFESSIONAL ENGINEER George S. Baker No. C57112 Exp. 12/31/05 CIVIL STATE OF CALIFORNIA

The State of California or its officers or agents shall not be responsible for the accuracy or completeness of electronic copies of this plan sheet.

T.Y. LIN / MOFFATT & NICHOL
825 BATTERY STREET
SAN FRANCISCO, CA 94111

Caltrans now has a web site! To get to the web site, go to: http://www.dot.ca.gov

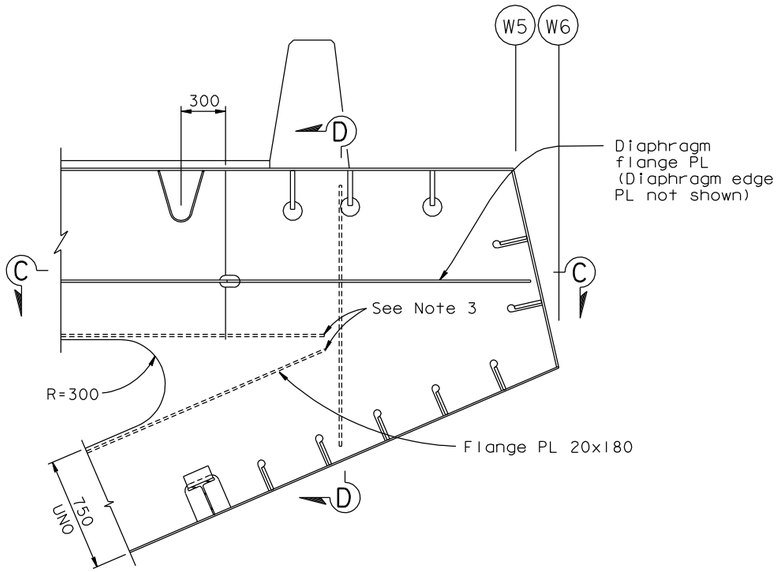

DETAIL A
1:20

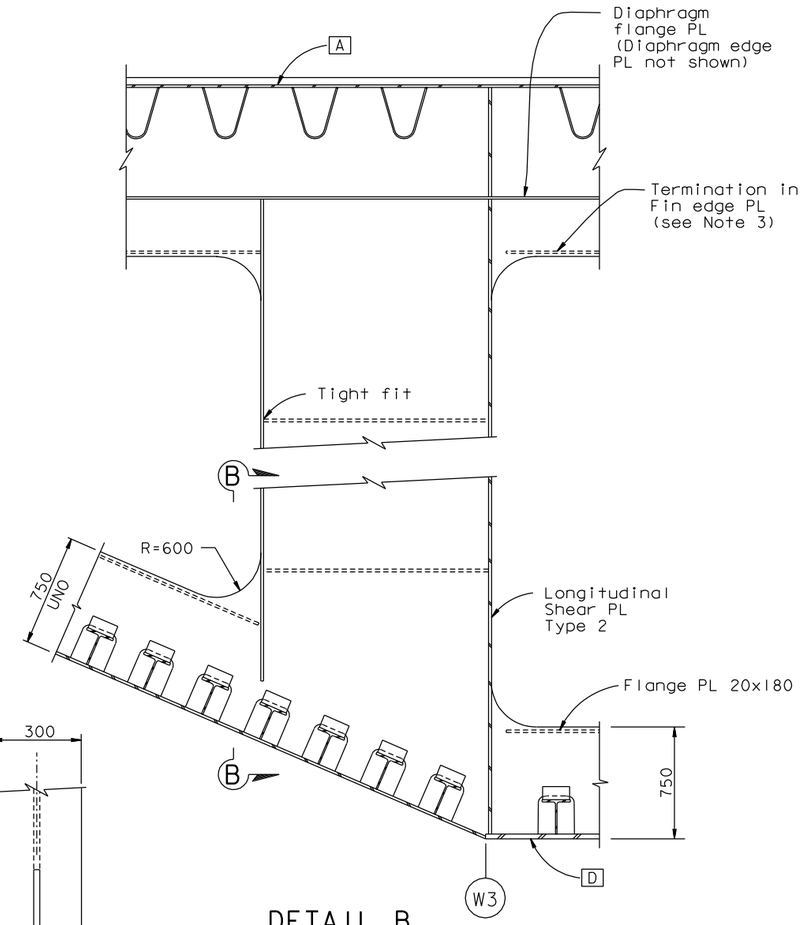

DETAIL B
1:20

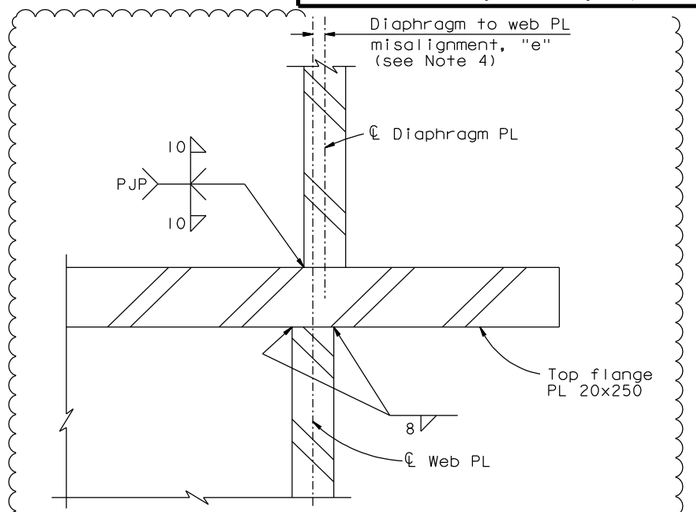

ALTERNATE DIAPHRAGM TO FLOORBEAM WELD DETAIL
AT FLOORBEAMS AND INTERMEDIATE FLOORBEAMS
AT EAST TRANSITION

DETAIL C (See Note 4)
NTS

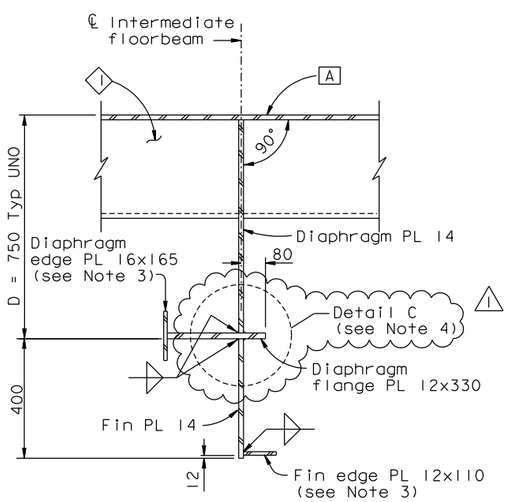

SECTION A-A (See Note 2)
1:10

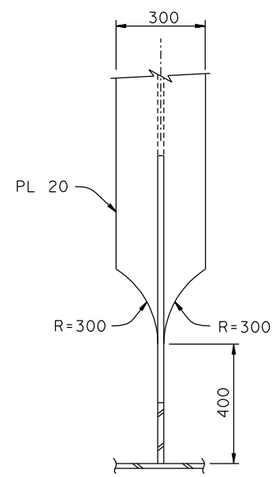

SECTION B-B
1:10

LEGEND:

D - Depth of diaphragm from top surface of girder face A to underside of diaphragm flange plate

NOTES:

1. For Sections C-C and D-D, see "Typical Floorbeam Details No. 3" sheet.
2. Section A-A is typical at all floorbeams that do not have Chevrons, including floorbeams in east transition. For these locations, see "Floorbeam At East Transition" sheets and Detail C.
3. For termination of diaphragm edge plate and fin edge plate, see "Typical Girder Details No. 16" sheet.
4. The alternate weld detail for diaphragm to floorbeam web connection shown in Detail C is acceptable on a fit-for-purpose basis to allow an increase in diaphragm to web plate misalignment, "e", of up to 10 mm at floorbeams and intermediate floorbeams in east transition spans.

REGISTERED PROFESSIONAL ENGINEER Marwan N. Nader No. C 054426 Exp. 12/31/11 CIVIL STATE OF CALIFORNIA

FOR REVISIONS ONLY

CONTRACT CHANGE ORDER NO. _____
SHEET ___ OF ___

REQUESTS FOR INFORMATION NOT ADDRESSED IN THIS CCO REMAIN IN FORCE

ALL DIMENSIONS ARE IN MILLIMETERS UNLESS OTHERWISE SHOWN

MARK	DATE	DESCRIPTIONS	BY	CH'D	CCO#
1	08/02/11	FLOORBEAM DIAPHRAGM	GB	MN	143

REVISIONS

R. Valizadeh/V. Toan/Y.L./W.L./F.C.
DESIGN OVERSIGHT
SIGN OFF DATE 08/02/11

DESIGN	BY G. Baker	CHECKED P. Ritchie	
DETAILS	BY S. Camo	CHECKED T. McMeans	
QUANTITIES	BY C. Mauch	CHECKED M. Roberts	

PREPARED FOR THE STATE OF CALIFORNIA DEPARTMENT OF TRANSPORTATION

R. Manzanarez
PROJECT ENGINEER

BRIDGE NO. 34-0006L/R
KILOMETER POST 13.2/13.9

SAN FRANCISCO OAKLAND BAY BRIDGE
EAST SPAN SEISMIC SAFETY PROJECT
SELF-ANCHORED SUSPENSION BRIDGE
(SUPERSTRUCTURE & TOWER)

TYPICAL FLOORBEAM DETAILS NO. 9

Rev. Date: 5-18-98

ORIGINAL SCALE IN MILLIMETERS FOR REDUCED PLANS 0 10 20 30 40 50 60 70 80 90 100

CU 04
EA 0120F1

DISREGARD PRINTS BEARING EARLIER REVISION DATES

REVISION DATES (PRELIMINARY STAGE ONLY) 01/15/99 05/13/99 08/06/99 05/31/01 04/26/02 07/01/02 12/19/02

SHEET 237R1 OF

FILE => I:\bb\04-012001\sas\contract plans and cco\cco\cco#143\3-update 08-02-11\dgn\agftb08.dgn

USERNAME => arivera DATE PLOTTED => 02 AUG 2011 TIME PLOTTED => 09:44:36

100 % PS&E