DIST.	COUNTY	ROUTE	KILOMETER POST TOTAL PROJECT	SHEET NO.	TOTAL SHEETS
04	SF	80	13.2/13.9	649S1	1204

REGISTERED ENGINEER - CIVIL

08-02-11

PLANS APPROVAL DATE

The State of California or its officers or agents shall not be responsible for the accuracy or completeness of electronic copies of this plan sheet.

REGISTERED PROFESSIONAL ENGINEER Marwan N. Nader No. C 054426 Exp. 12/31/11 CIVIL STATE OF CALIFORNIA

T.Y. LIN / MOFFATT & NICHOL
825 BATTERY STREET
SAN FRANCISCO, CA 94111

Caltrans now has a web site! To get to the web site, go to: http://www.dot.ca.gov

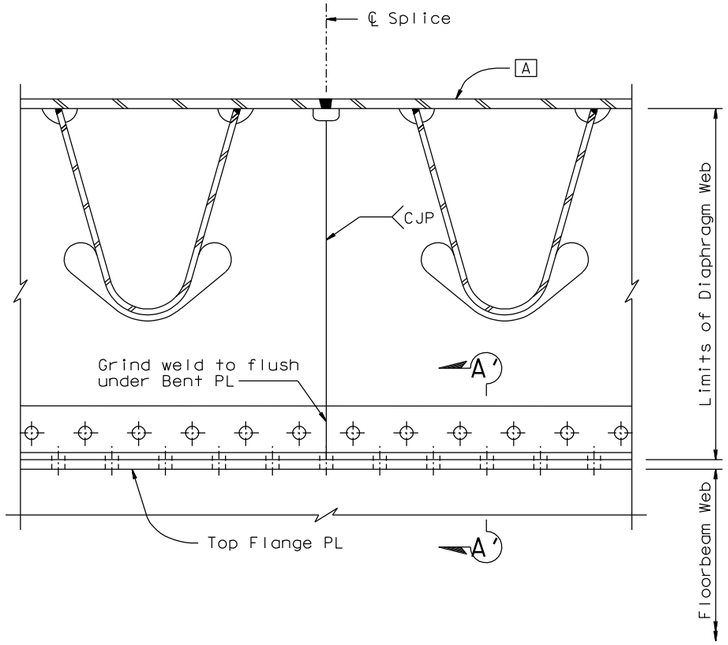

DIAPHRAGM RETROFIT DETAIL (See Notes 1 and 4)

1:5

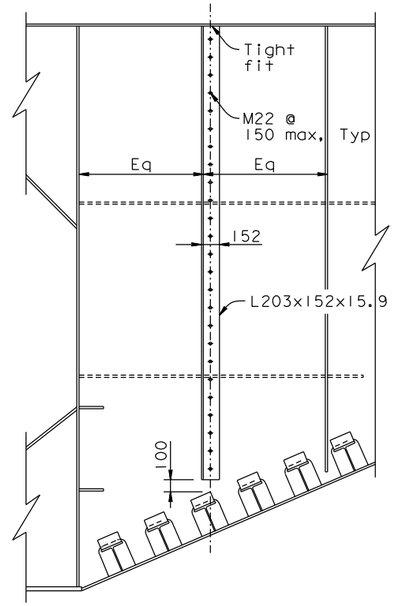

FLOORBEAM WEB PANEL FLATNESS RETROFIT DETAIL (See Note 3)

1:25

NOTES:

1. Floorbeam diaphragm web plate distortion resulting from fabrication methods and application of heat straightening shall be repaired following the guidelines provided in "Heat Distortion Repair Criteria for Diaphragm Plate" Table below, the "Diaphragm Retrofit Detail" and the "Floorbeam Web Panel Flatness Retrofit Detail" provided on this sheet. Approval of the Engineer is required prior to repair.

TABLE: Heat Distortion Repair Criteria for Diaphragm Plate (See Note 4)

CASE	DISTORTION RANGE (△)	APPLY HEAT STRAIGHTENING	APPLY DIAPHRAGM RETROFIT DETAIL	ADDITIONAL 100% NDT
A	△ > 30 mm *	Required to bring △ to less than 30 mm	Pending results of heat- straightening, see Case B or C	Required
B	10 mm < △ ≤ 30 mm	Optional in lieu of Diaphragm Retrofit	Required if not heat-straightened	Required if heat straightened
C	△ ≤ 10	Not required	Not required	Not required

* △ > 30 mm is not acceptable in the final condition.

2. Radius of Bent PL may be increased to clear additional weld reinforcement, if any.
3. The "Floorbeam Web Panel Flatness Retrofit Detail" shall be used to correct out-of-tolerance floorbeam web panel flatness as directed by the Engineer.
4. Retrofit applicable only when diaphragm to web misalignment "e" at floorbeams is within the specified tolerance, see "Typical Floorbeam Details No. 9" sheet. For "e" outside tolerances, retrofit shall be as directed by the Engineer.

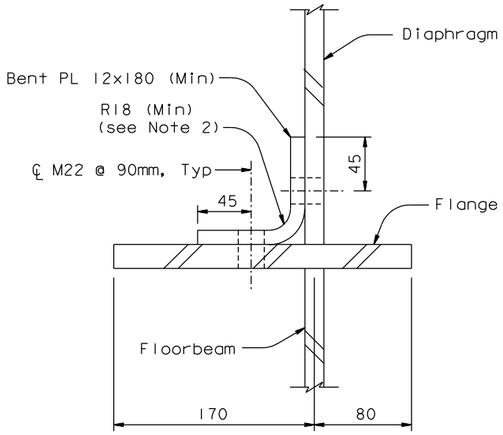

SECTION A'-A'

1:2.5

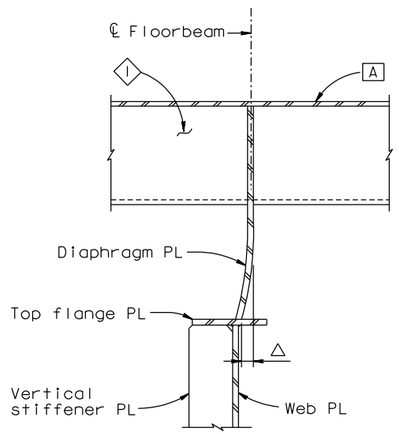

DISTORTION MEASUREMENT "△"

NTS

CONTRACT CHANGE ORDER NO. _____
SHEET ____ OF ____

REQUESTS FOR INFORMATION NOT ADDRESSED IN THIS CCO REMAIN IN FORCE

ALL DIMENSIONS ARE IN MILLIMETERS UNLESS OTHERWISE SHOWN

R. Valizadeh/V. Toan/Y.L./W.L./F.C.
DESIGN OVERSIGHT
SIGN OFF DATE 08/02/11

MARK	DATE	DESCRIPTIONS	BY	CH'D	CCO#
0	08/02/11	FLOORBEAM DIAPHRAGM	GB	MN	143

REVISIONS

DESIGN	BY G. Baker	CHECKED M. Nader	
DETAILS	BY G. Baker	CHECKED M. Nader	
QUANTITIES	BY G. Baker	CHECKED M. Nader	

PREPARED FOR THE STATE OF CALIFORNIA DEPARTMENT OF TRANSPORTATION

R. Manzanarez
PROJECT ENGINEER

BRIDGE NO. 34-0006L/R
KILOMETER POST 13.2/13.9

SAN FRANCISCO OAKLAND BAY BRIDGE
EAST SPAN SEISMIC SAFETY PROJECT
SELF-ANCHORED SUSPENSION BRIDGE
(SUPERSTRUCTURE & TOWER)

TYPICAL FLOORBEAM DETAILS NO. 4A

Rev. Date: 5-18-98

ORIGINAL SCALE IN MILLIMETERS FOR REDUCED PLANS 0 10 20 30 40 50 60 70 80 90 100

CU 04
EA 0120F1

DISREGARD PRINTS BEARING EARLIER REVISION DATES 08/02/11

REVISION DATES (PRELIMINARY STAGE ONLY)

SHEET 232S1 OF

FILE => L:\BB\04-012001\SAS\Contract Plans and CCO\CCO\CCO#143\3-Update 08-02-11\DGN\agftb06a.dgn

100% PS&E

USERNAME => arivera DATE PLOTTED => 02 AUG 2011 TIME PLOTTED => 09:45:52