DIST.	COUNTY	ROUTE	KILOMETER POST TOTAL PROJECT	SHEET NO.	TOTAL SHEETS
04	SF	80	13.2/13.9	1163S12	1204

REGISTERED ENGINEER - CIVIL

07-09-10
PLANS APPROVAL DATE

REGISTERED PROFESSIONAL ENGINEER Alex E. Sanjines No. C 051153 Exp. 9/30/11 CIVIL STATE OF CALIFORNIA

The State of California or its officers or agents shall not be responsible for the accuracy or completeness of electronic copies of this plan sheet.

T.Y. LIN / MOFFATT & NICHOL
825 BATTERY STREET
SAN FRANCISCO, CA 94111

Caltrans now has a web site! To get to the web site, go to: http://www.dot.ca.gov

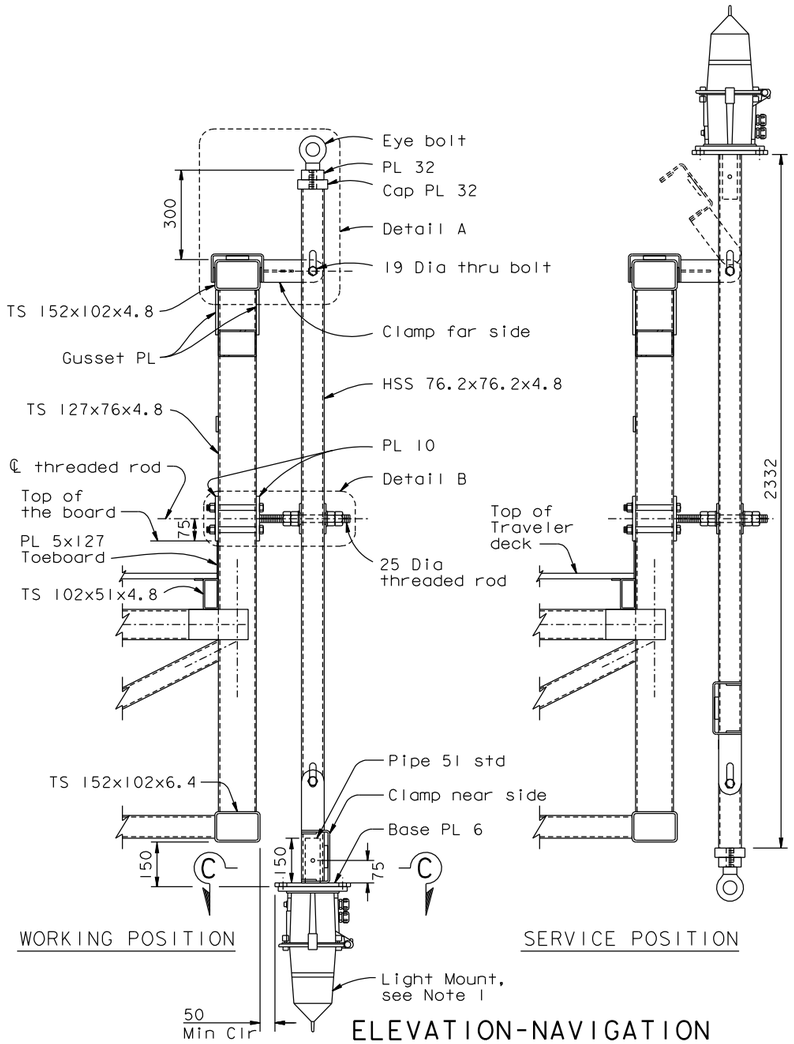

ELEVATION-NAVIGATION LIGHT MOUNT
1:10

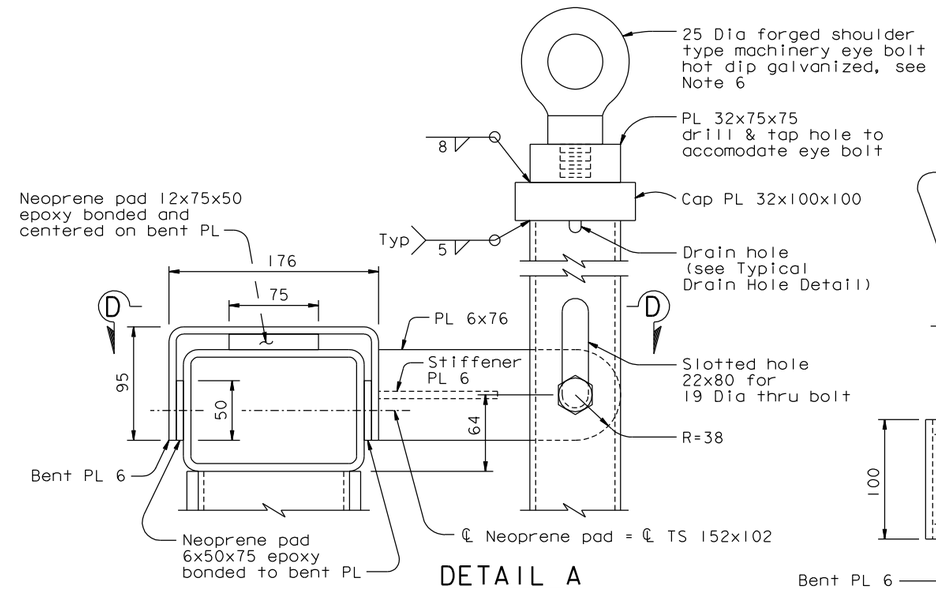

DETAIL A
1:2.5

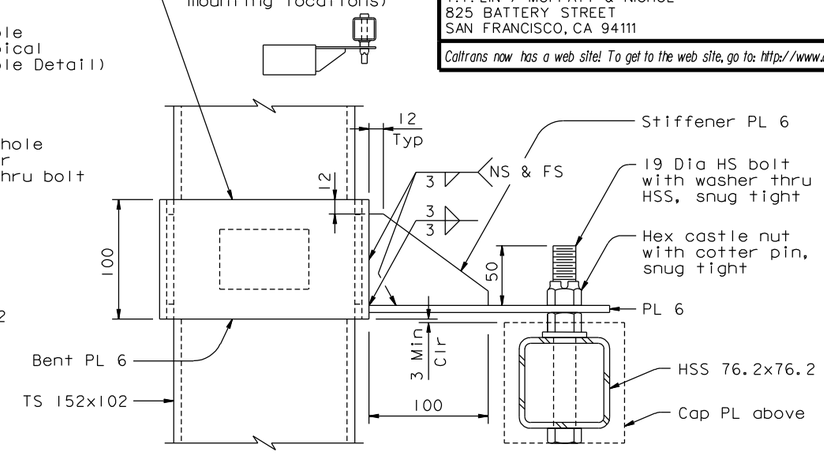

SECTION D-D
1:2.5

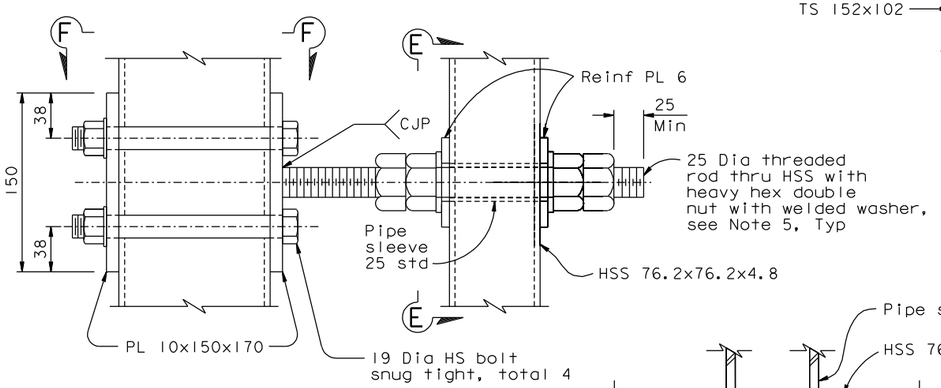

DETAIL B
1:2.5

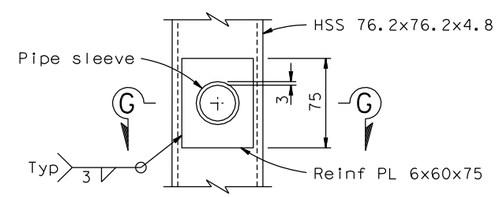

SECTION E-E
1:2.5

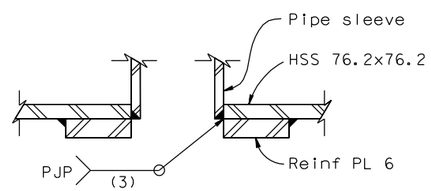

SECTION G-G
1:1

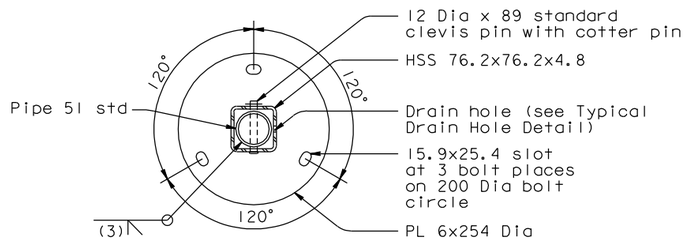

SECTION C-C
1:5

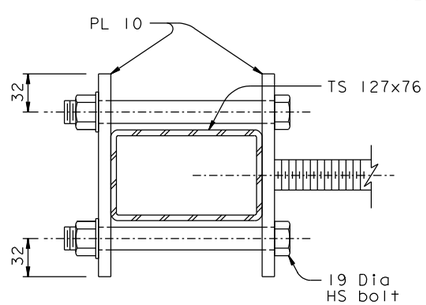

SECTION F-F
1:2.5

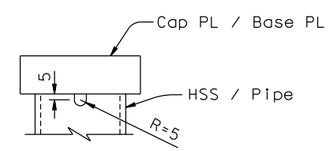

TYPICAL DRAIN HOLE DETAIL
1:2.5

NOTES

1. Install four Navigation Light mounts on each SAS and E2/E3 Traveler (Total 16).
2. All components shall be hot dip galvanized.
3. Threaded rod shall be ASTM A36M galvanized; HS bolt shall be ASTM A325M galvanized; Nuts shall be ASTM A563M galvanized and Washer shall be ASTM F436 galvanized.
4. For Traveler navigation light electrical details, see "Road Plans".
5. Nuts shall be tightened so as to allow rotation of HSS about ℄ threaded rod.
6. Nylon rope Min 9 Dia shall be used in conjunction with the eye bolt to control the swing of the light mount.

CONTRACT CHANGE ORDER NO. ____
SHEET ____ OF ____

REQUESTS FOR INFORMATION NOT ADDRESSED IN THIS CCO REMAIN IN FORCE

ALL DIMENSIONS ARE IN MILLIMETERS UNLESS OTHERWISE SHOWN

R. Valizadeh/V. Toan/Y.L./W.L./F.C.
DESIGN OVERSIGHT
SIGN OFF DATE 07/09/10

MARK	DATE	DESCRIPTIONS	BY	CH'D	CCO#
0	07/09/10	TRAVELER NAVIGATION LIGHT	HP	AS	137

REVISIONS

	BY	CHECKED
DESIGN	H. Patel	A. Sanjines
DETAILS	H. Patel	A. Sanjines
QUANTITIES	H. Patel	A. Sanjines

PREPARED FOR THE STATE OF CALIFORNIA DEPARTMENT OF TRANSPORTATION

R. Manzanarez
PROJECT ENGINEER

BRIDGE NO. 34-0006L/R
KILOMETER POST 13.2/13.9

SAN FRANCISCO OAKLAND BAY BRIDGE
EAST SPAN SEISMIC SAFETY PROJECT
SELF-ANCHORED SUSPENSION BRIDGE
(SUPERSTRUCTURE & TOWER)

TRAVELER NAVIGATION LIGHT MOUNT DETAIL

Rev. Date: 5-18-98

ORIGINAL SCALE IN MILLIMETERS FOR REDUCED PLANS 0 10 20 30 40 50 60 70 80 90 100

CU 04
EA 0120F1

DISREGARD PRINTS BEARING EARLIER REVISION DATES 07/09/10

SHEET 746S12 OF

FILE => I:\bb\04-012001\sas\contract plans and cco\cco\cco#137\2-update 07-09-10\dgn\aktrv155s12.dgn

100% PS&E DATE PLOTTED => 09 JUL 2010 TIME PLOTTED => 11:35:28

USERNAME => arivera