DIST	COUNTY	ROUTE	KILOMETER POST TOTAL PROJECT	SHEET No	TOTAL SHEETS
04	SF	80	13.2/13.9	292 S5	1204

Syn Yee Chin 08/13/10
REGISTERED ELECTRICAL ENGINEER DATE

PLANS APPROVAL DATE

REGISTERED PROFESSIONAL ENGINEER SYN YEE CHIN No. 18186 Exp. 09/30/2011 ELECTRICAL STATE OF CALIFORNIA

PB AMERICAS, Inc.
A Parsons Brinckerhoff Company
303 Second St., Suite 700N
San Francisco, CA 94107-1317

The State of California or its officers or agents shall not be responsible for the accuracy or completeness of electronic copies of this plan sheet.

Caltrans now has a web site! To get to the web site, go to http://www.dot.ca.gov

Caltrans Metric

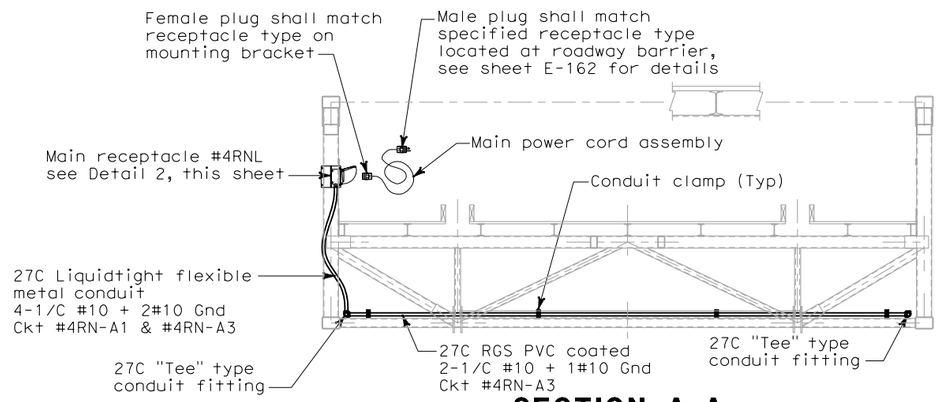

SECTION A-A
SCALE SCALE 1:25

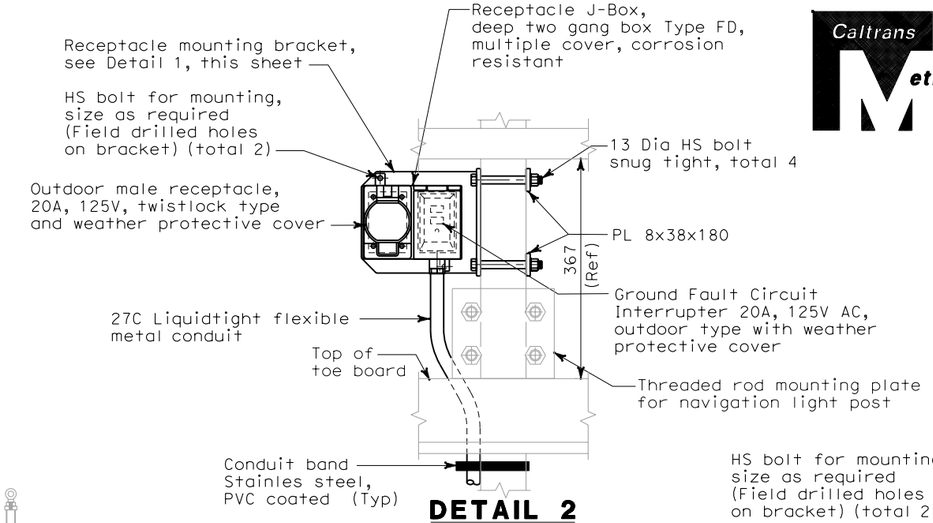

DETAIL 2
SCALE 1:5

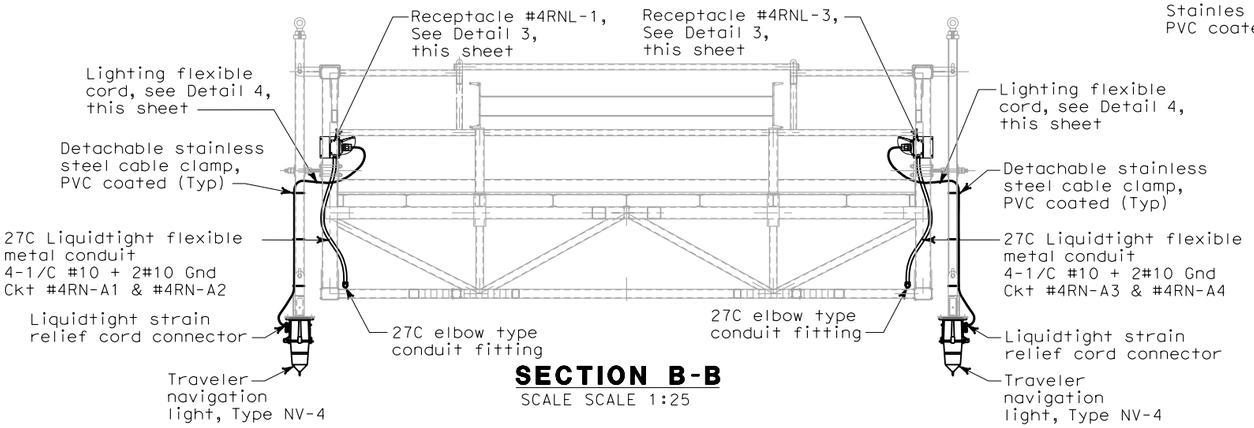

SECTION B-B
SCALE SCALE 1:25

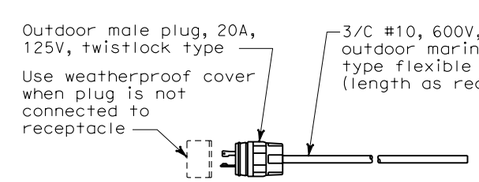

DETAIL 4
No Scale
LIGHTING FLEXIBLE CORD ASSEMBLY (Typical for 4)

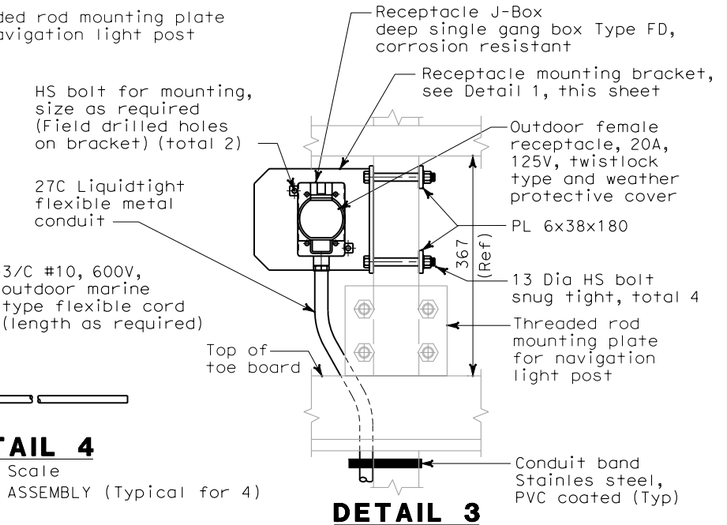

DETAIL 3
SCALE 1:5
Mating plug not shown.
For actual orientation of receptacle, see sheet E-292D
(Typical for 4)

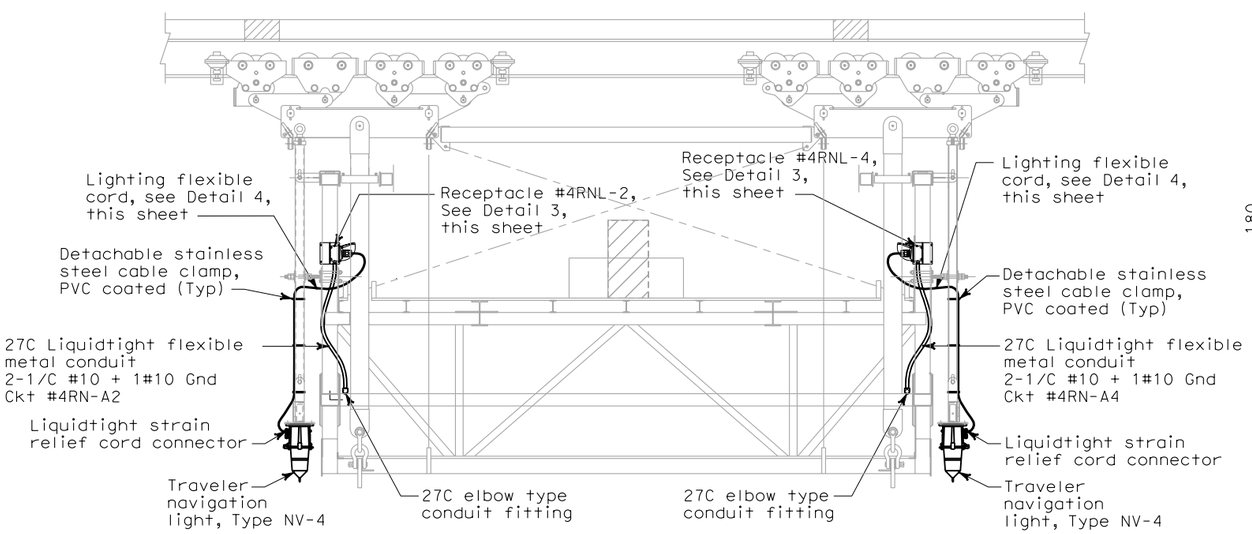

SECTION C-C
SCALE 1:25

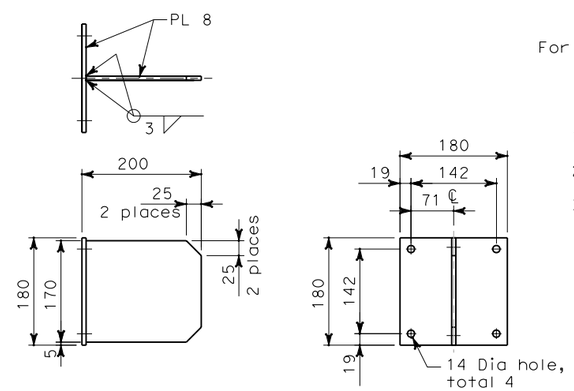

DETAIL 1
SCALE 1:5
RECEPTACLE MOUNTING BRACKET
(Bracket must be free from burrs and sharp edges)

NOTES:

1. For Sections A-A, B-B and C-C, see sheet E-292D.
2. All conduit connections shall be watertight.
3. All conduit bodies (fittings) shall be RGS PVC coated with gasket and cover.

REQUEST FOR INFORMATION NOT ADDRESSED IN THIS CCO REMAIN IN FORCE

MARK	DATE	DESCRIPTIONS	BY	CH'D	CCO#
0	08/13/10	TRAVELER MODIFICATIONS	TW	RG	137

REVISIONS

CONTRACT CHANGE ORDER NO._____
SHEET _____ OF _____

DETAILS
NAVIGATION AND AVIATION WARNING SYSTEMS
E2/E3 TRAVELER ASSEMBLY EASTBOUND
SCALE AS NOTED

E-292E

THIS PLAN ACCURATE FOR ELECTRICAL WORK ONLY.

ALL DIMENSIONS ARE IN MILLIMETERS UNLESS OTHERWISE SHOWN

DATE	BY	REVISED BY	DATE REVISED
08/10	TW	RG	08/10

CALCULATED/DESIGNED BY — CHECKED BY

DESIGN OVERSIGHT — BEHZAD GOLEMOHAMMADI

STATE OF CALIFORNIA - DEPARTMENT OF TRANSPORTATION — Caltrans

FOR REDUCED PLANS ORIGINAL SCALE IS IN MILLIMETERS 0 20 40 60 80

DGN FILE =>Q:\13103 SF_O Bay Bridge\A-SFOBB Work Files after 11-05\SAS\CCO CADD Working Files\CCO-137\Designer Files\04-0120f1_02
USERNAME =>Garciar

CU 04251 | EA 0120F1

LAST REVISION 00-00-00 | DATE PLOTTED => 8/13/2010 TIME PLOTTED => 8:48:15 AM