DIST	COUNTY	ROUTE	KILOMETER POST TOTAL PROJECT	SHEET No	TOTAL SHEETS
04	SF	80	13.2/13.9	292 S2	1204

Caltrans Metric

Syn Yee Chin 08/13/10
REGISTERED ELECTRICAL ENGINEER DATE

REGISTERED PROFESSIONAL ENGINEER SYN YEE CHIN No. 18186 Exp. 09/30/2011 ELECTRICAL STATE OF CALIFORNIA

PLANS APPROVAL DATE

PB AMERICAS, Inc.
A Parsons Brinckerhoff Company
303 Second St., Suite 700N
San Francisco, CA 94107-1317

The State of California or its officers or agents shall not be responsible for the accuracy or completeness of electronic copies of this plan sheet.

Caltrans now has a web site! To get to the web site, go to http://www.dot.ca.gov

NOTES:

1. Label for electrical components and cable circuit numbers for eastbound are prefixed with "2" as shown. Westbound shall be prefixed with "1".
2. Conductor splices shall be done inside receptacle junction boxes only.
3. For additional notes, see plan sheet E-292C.
4. For navigation and aviation warning systems lighting fixture schedule, see plan sheet E-297.

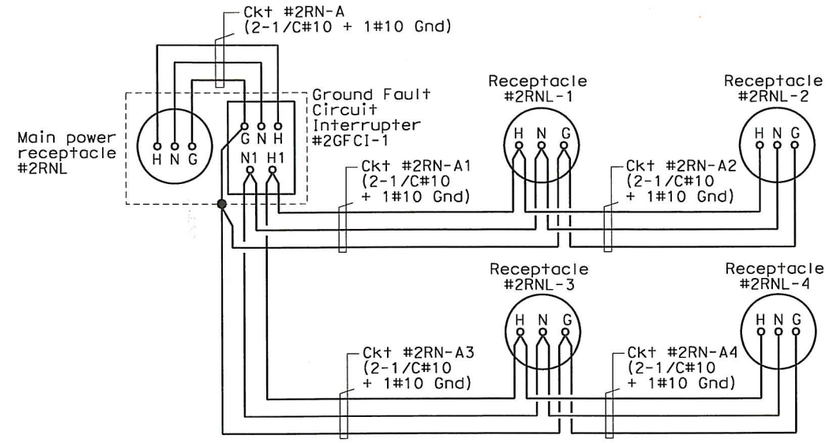

WIRING DIAGRAM

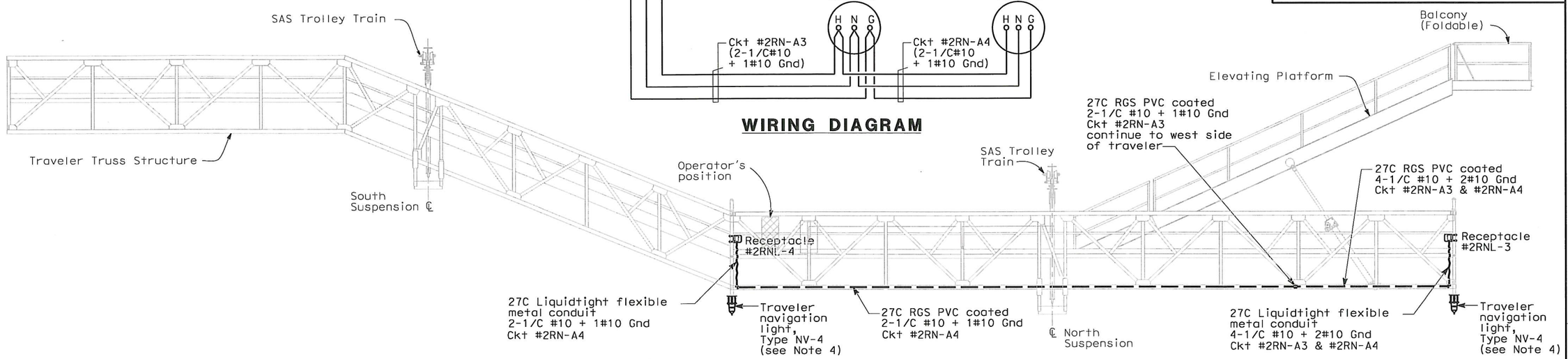

DETAIL 1 - ELEVATION

SCALE 1:50
EAST SIDE OF EASTBOUND TRAVELER ASSEMBLY SHOWN
(WESTBOUND SIMILAR)

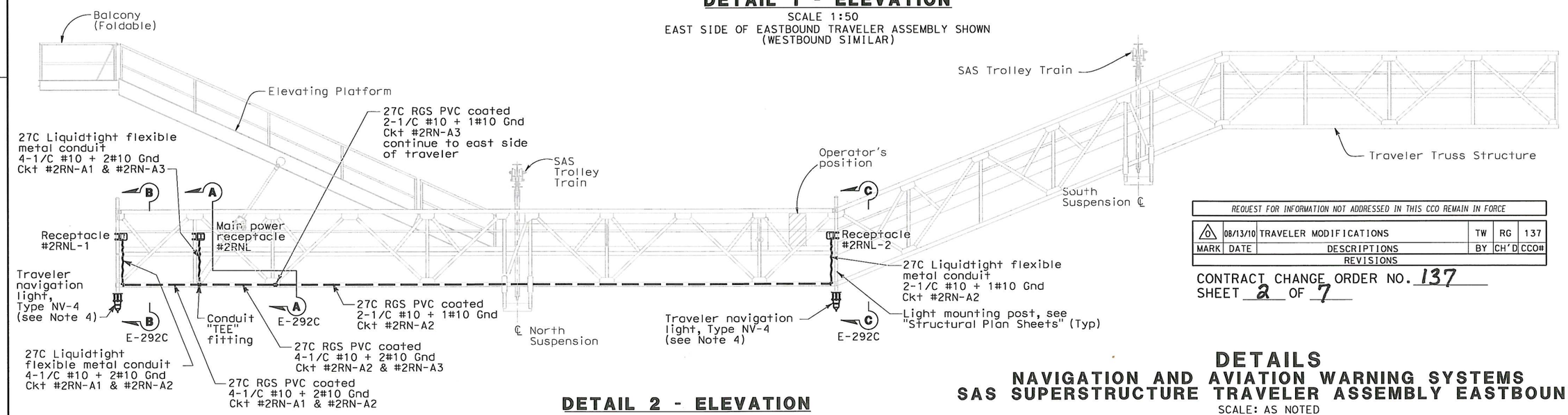

DETAIL 2 - ELEVATION

SCALE 1:50
WEST SIDE OF EASTBOUND TRAVELER ASSEMBLY SHOWN.
WESTBOUND SIMILAR

REQUEST FOR INFORMATION NOT ADDRESSED IN THIS CCO REMAIN IN FORCE

MARK	DATE	DESCRIPTIONS	BY	CH'D	CCO#
0	08/13/10	TRAVELER MODIFICATIONS	TW	RG	137

REVISIONS

CONTRACT CHANGE ORDER NO. 137
SHEET 2 OF 7

DETAILS
NAVIGATION AND AVIATION WARNING SYSTEMS
SAS SUPERSTRUCTURE TRAVELER ASSEMBLY EASTBOUND

SCALE: AS NOTED

E-292B

THIS PLAN ACCURATE FOR ELECTRICAL WORK ONLY.

ALL DIMENSIONS ARE IN MILLIMETERS UNLESS OTHERWISE SHOWN

FOR REDUCED PLANS ORIGINAL SCALE IS IN MILLIMETERS 0 20 40 60 80

DGN FILE =>O:\13103 SF_O Bay Bridge\A-SFOBB Work Files after 11-05\SAS\CCO CADD Working Files\CCO-137\Designer Files\04-0120f1_02
USERNAME =>Garcia

CU 04251 EA 0120F1

DATE PLOTTED => 8/13/2010
TIME PLOTTED => 8:45:39 AM

LAST REVISION 00-00-00

STATE OF CALIFORNIA - DEPARTMENT OF TRANSPORTATION
Caltrans

DESIGN OVERSIGHT
BEHZAD GOLEMOHAMMADI

CALCULATED/DESIGNED BY TW
CHECKED BY RG

DATE REVISED 08/10
DATE REVISED 08/10

DIST	COUNTY	ROUTE	KILOMETER POST TOTAL PROJECT	SHEET No	TOTAL SHEETS
04	SF	80	13.2/13.9	292 S3	1204

Syn Yee Chin 08/13/10
REGISTERED ELECTRICAL ENGINEER DATE

PLANS APPROVAL DATE

REGISTERED PROFESSIONAL ENGINEER SYN YEE CHIN No. 18186 Exp. 09/30/2011 ELECTRICAL STATE OF CALIFORNIA

PB AMERICAS, Inc.
A Parsons Brinckerhoff Company
303 Second St., Suite 700N
San Francisco, CA 94107-1317

The State of California or its officers or agents shall not be responsible for the accuracy or completeness of electronic copies of this plan sheet.

Caltrans now has a web site! To get to the web site, go to http://www.dot.ca.gov

Caltrans Metric

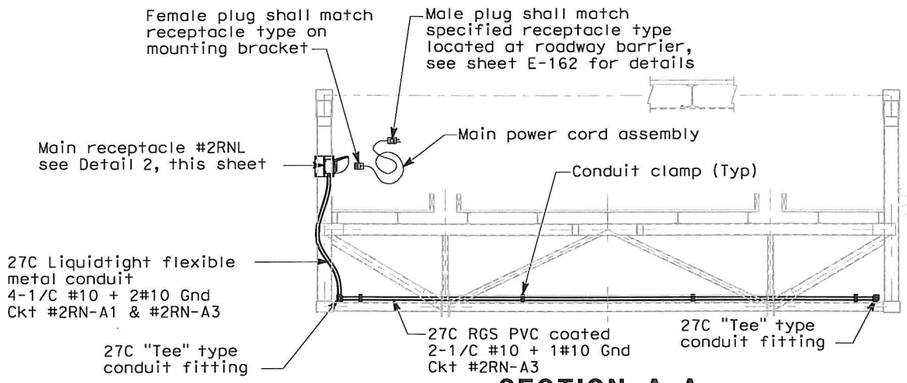

SECTION A-A
SCALE 1:25

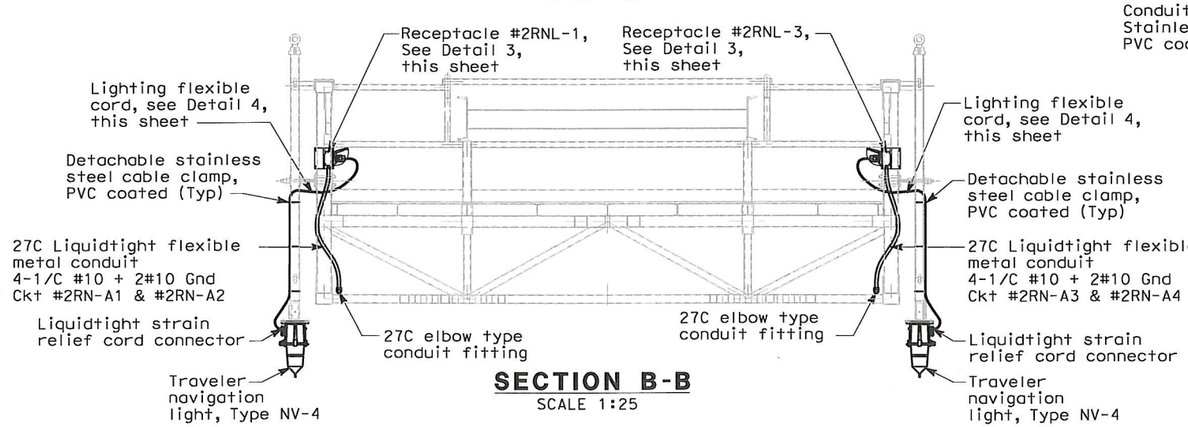

SECTION B-B
SCALE 1:25

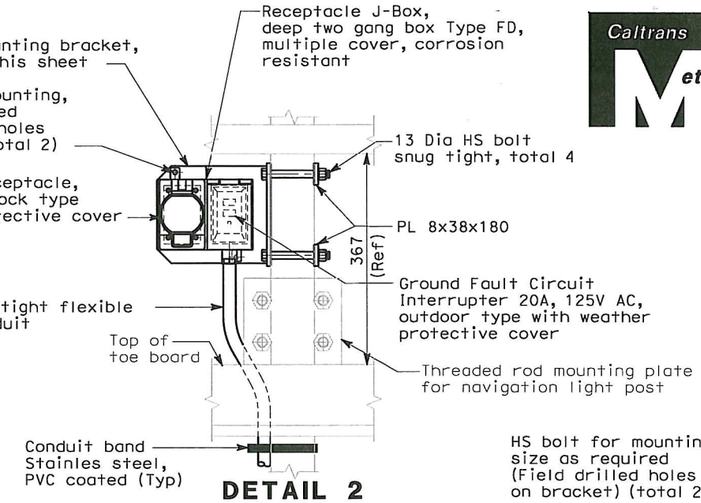

DETAIL 2
SCALE 1:5

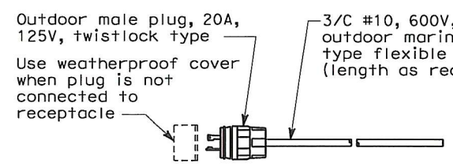

DETAIL 4
No Scale
LIGHTING FLEXIBLE CORD ASSEMBLY (Typical for 4)

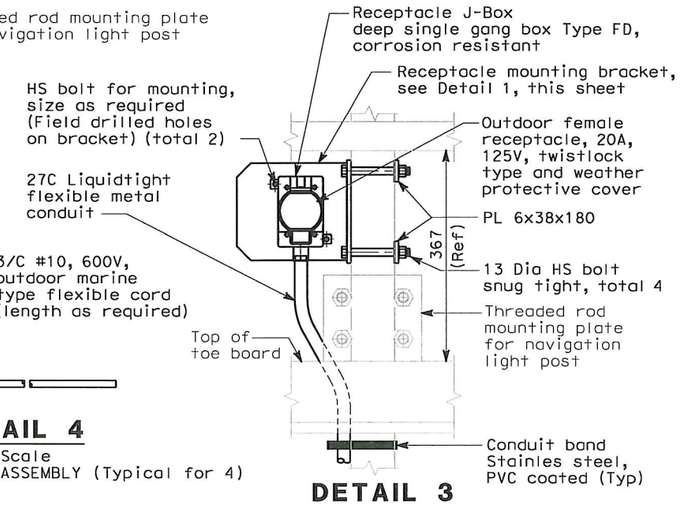

DETAIL 3
1:5
Mating plug not shown.
For actual orientation of receptacle, see sheet E-292B
(Typical for 4)

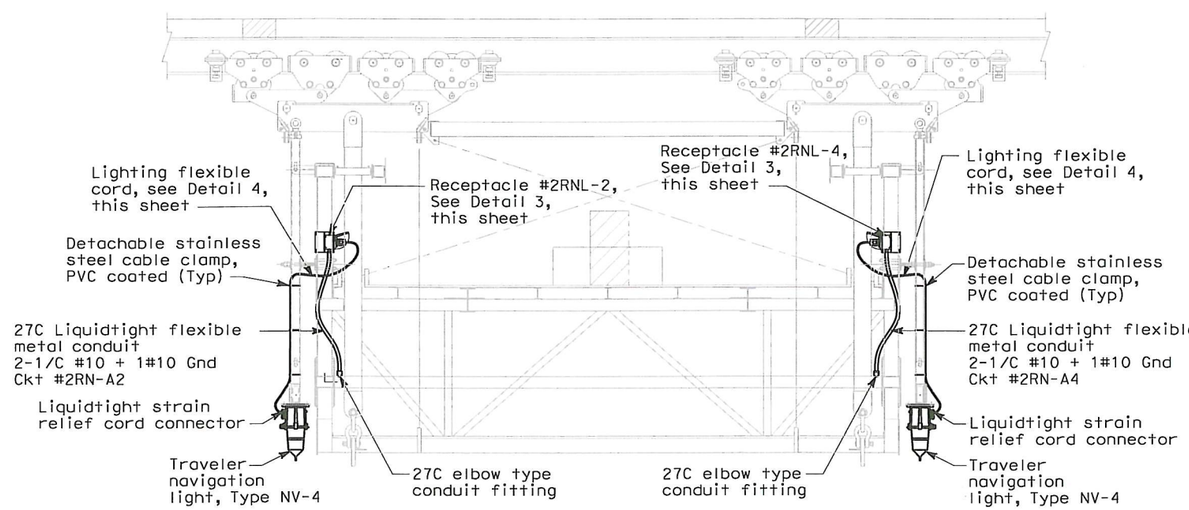

SECTION C-C
SCALE 1:25

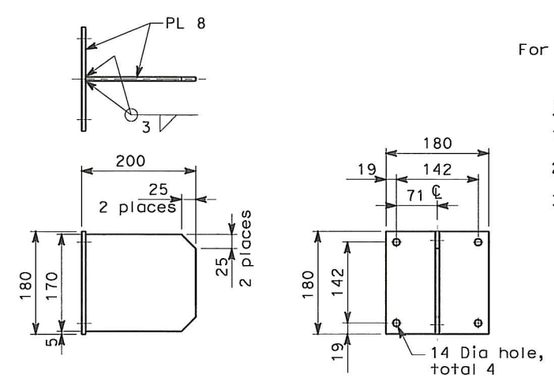

DETAIL 1
SCALE 1:5
RECEPTACLE MOUNTING BRACKET
(Bracket must be free from burrs and sharp edges)

NOTES:

1. For Sections A-A, B-B and C-C, see sheet E-292B.
2. All conduit connections shall be watertight.
3. All conduit bodies (fittings) shall be RGS PVC coated with gasket and cover.

REQUEST FOR INFORMATION NOT ADDRESSED IN THIS CCO REMAIN IN FORCE

MARK	DATE	DESCRIPTIONS	BY	CH'D	CCO#
0	08/13/10	TRAVELER MODIFICATIONS	TW	RG	137

REVISIONS

CONTRACT CHANGE ORDER NO. 137
SHEET 3 OF 7

DETAILS
NAVIGATION AND AVIATION WARNING SYSTEMS
SAS SUPERSTRUCTURE TRAVELER ASSEMBLY EASTBOUND
SCALE AS NOTED

E-292C

THIS PLAN ACCURATE FOR ELECTRICAL WORK ONLY.

ALL DIMENSIONS ARE IN MILLIMETERS UNLESS OTHERWISE SHOWN

REVISED BY	DATE REVISED		
DATE 08/10	08/10		
CALCULATED/DESIGNED BY TW	CHECKED BY RG		
DESIGN OVERSIGHT BEHZAD GOLEMOHAMMADI			

STATE OF CALIFORNIA - DEPARTMENT OF TRANSPORTATION
Caltrans

FOR REDUCED PLANS ORIGINAL SCALE IS IN MILLIMETERS 0 20 40 60 80

DGN FILE =>O:\13103 SF_O Bay Bridge\A-SFOBB Work Files after 11-05\SAS\CCO CADD Working Files\CCO-137\Designer Files\04-0120f1_02
USERNAME =>Garcior

CU 04251 EA 0120F1

LAST REVISION 00-00-00
DATE PLOTTED => 8/13/2010
TIME PLOTTED => 8:46:42 AM

DIST	COUNTY	ROUTE	KILOMETER POST TOTAL PROJECT	SHEET No	TOTAL SHEETS
04	SF	80	13.2/13.9	292 S4	1204

Syn Yee Chin 08/13/10
REGISTERED ELECTRICAL ENGINEER DATE

PLANS APPROVAL DATE

REGISTERED PROFESSIONAL ENGINEER SYN YEE CHIN No. 18186 Exp. 09/30/2011 ELECTRICAL STATE OF CALIFORNIA

PB AMERICAS, Inc.
A Parsons Brinckerhoff Company
303 Second St., Suite 700N
San Francisco, CA 94107-1317

The State of California or its officers or agents shall not be responsible for the accuracy or completeness of electronic copies of this plan sheet.

Caltrans now has a web site! To get to the web site, go to http://www.dot.ca.gov

Caltrans Metric

NOTES:

1. Label for electrical components and cable circuit numbers for eastbound are prefixed with "4" as shown. Westbound shall be prefixed with "3".
2. Conductor splices shall be done inside receptacle junction boxes only.
3. For additional notes, see plan sheet E-292E.
4. For navigation and aviation warning systems lighting fixture schedule, see plan sheet E-297.

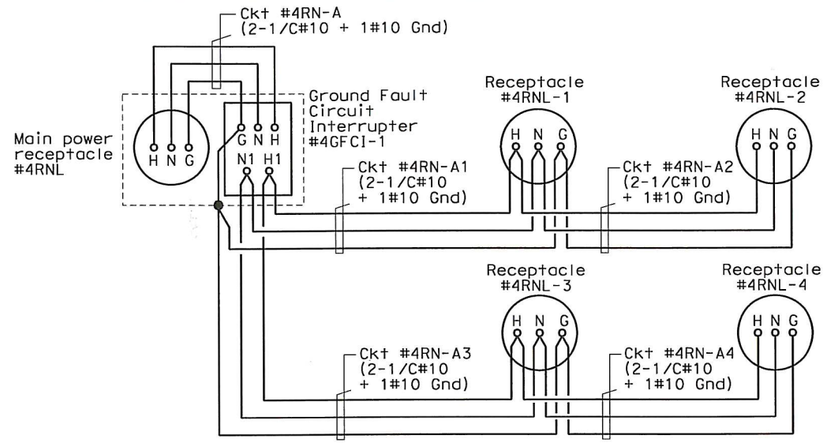

WIRING DIAGRAM

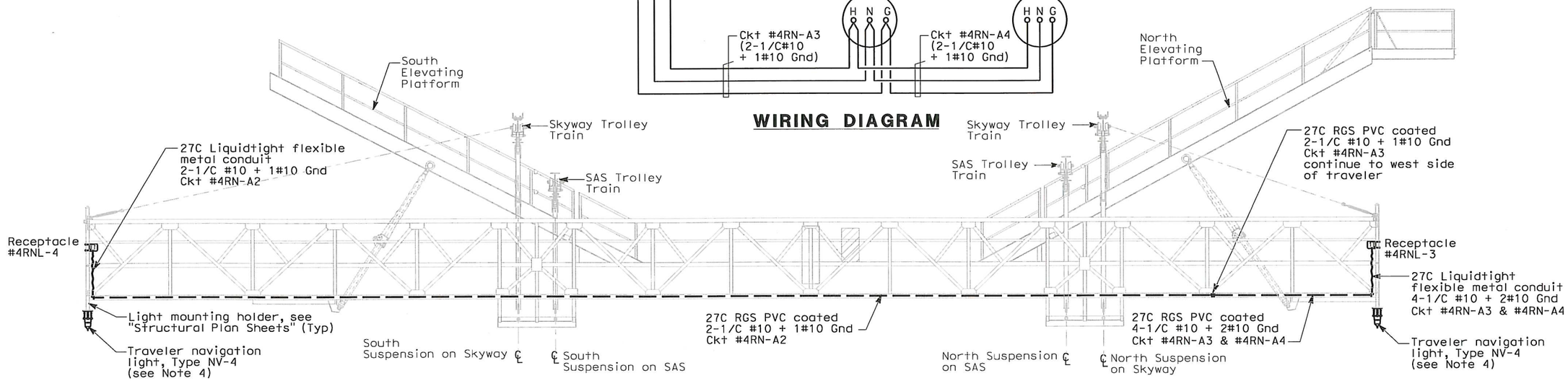

DETAIL 1 - ELEVATION
1:50
EAST SIDE OF EASTBOUND TRAVELER ASSEMBLY SHOWN
(WESTBOUND SIMILAR)

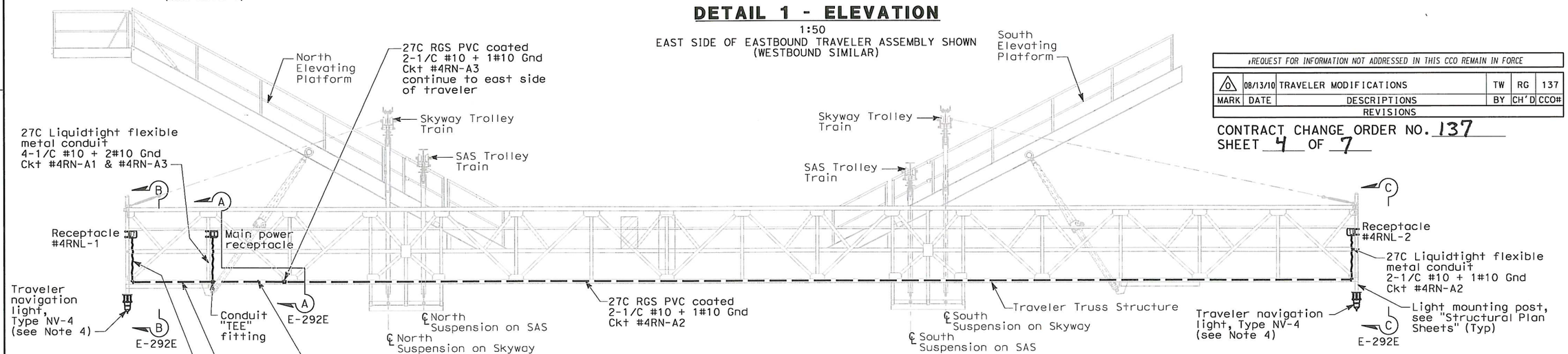

DETAIL 2 - ELEVATION
1:50
WEST SIDE OF EASTBOUND TRAVELER ASSEMBLY SHOWN
(WESTBOUND SIMILAR)

REQUEST FOR INFORMATION NOT ADDRESSED IN THIS CCO REMAIN IN FORCE

MARK	DATE	DESCRIPTIONS	BY	CH'D	CCO#
0	08/13/10	TRAVELER MODIFICATIONS	TW	RG	137

REVISIONS

CONTRACT CHANGE ORDER NO. 137
SHEET 4 OF 7

DETAILS
NAVIGATION AND AVIATION WARNING SYSTEMS
E2/E3 TRAVELER ASSEMBLY EASTBOUND
SCALE AS NOTED

THIS PLAN ACCURATE FOR ELECTRICAL WORK ONLY.

ALL DIMENSIONS ARE IN MILLIMETERS UNLESS OTHERWISE SHOWN

E-292D

DATE	REVISED BY	DATE	REVISED
08/10	TW	08/10	RG

CALCULATED/DESIGNED BY TW
CHECKED BY RG

DESIGN OVERSIGHT
BEHZAD GOLEMOHAMMADI

STATE OF CALIFORNIA - DEPARTMENT OF TRANSPORTATION
Caltrans

FOR REDUCED PLANS ORIGINAL SCALE IS IN MILLIMETERS 0 20 40 60 80

DGN FILE =>O:\13103 SF_O Bay Bridge\A-SFOBB Work Files after 11-05\SAS\CCO CADD Working Files\CCO-137\Designer Files\04-0120f1_02
USERNAME =>Garciar

CU 04251 EA 0120F1

LAST REVISION 00-00-00
DATE PLOTTED => 8/13/2010
TIME PLOTTED => 8:47:31 AM

DIST	COUNTY	ROUTE	KILOMETER POST TOTAL PROJECT	SHEET No	TOTAL SHEETS
04	SF	80	13.2/13.9	292 S5	1204

Syn Yee Chin 08/13/10
REGISTERED ELECTRICAL ENGINEER DATE

PLANS APPROVAL DATE

REGISTERED PROFESSIONAL ENGINEER SYN YEE CHIN No. 18186 Exp. 09/30/2011 ELECTRICAL STATE OF CALIFORNIA

PB AMERICAS, Inc.
A Parsons Brinckerhoff Company
303 Second St., Suite 700N
San Francisco, CA 94107-1317

The State of California or its officers or agents shall not be responsible for the accuracy or completeness of electronic copies of this plan sheet.

Caltrans now has a web site! To get to the web site, go to http://www.dot.ca.gov

Caltrans Metric

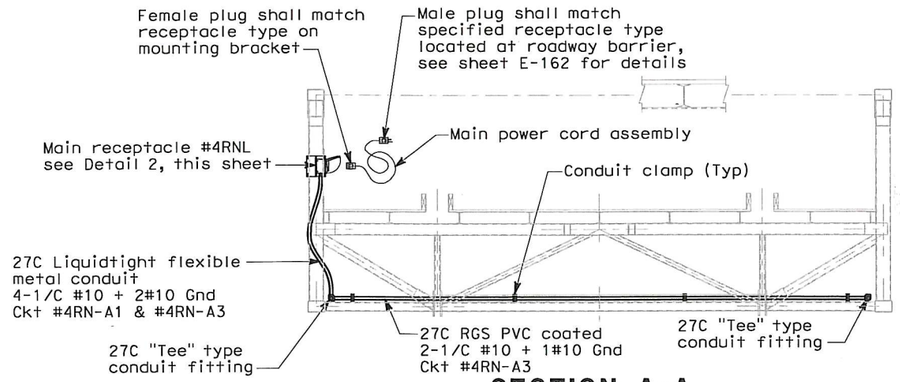

SECTION A-A
SCALE SCALE 1:25

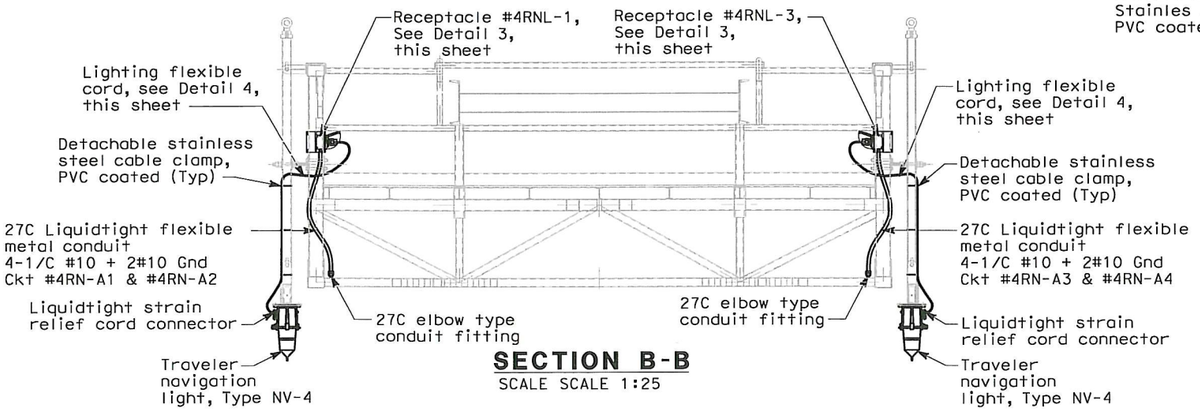

SECTION B-B
SCALE SCALE 1:25

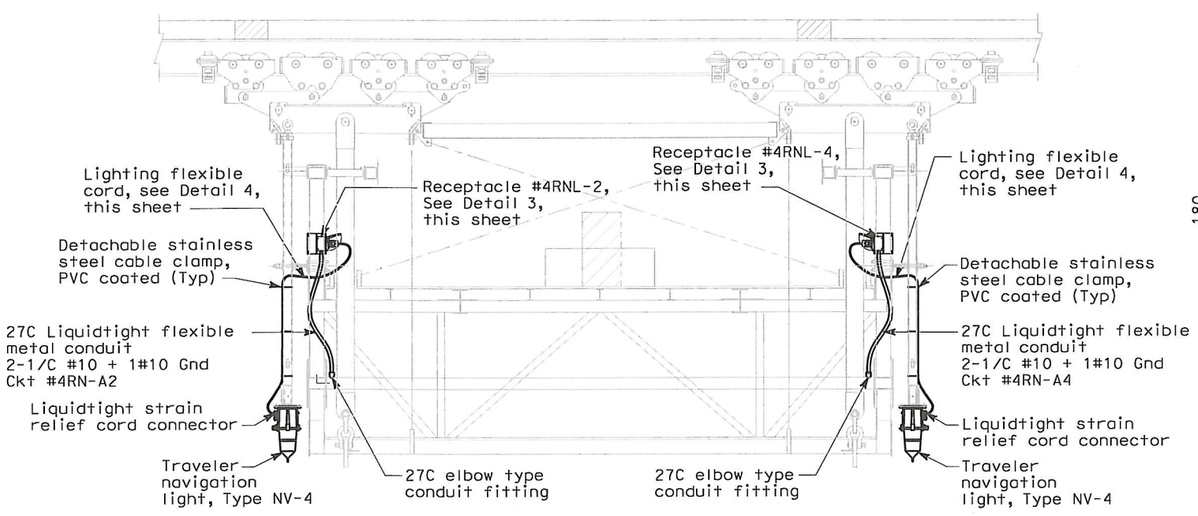

SECTION C-C
SCALE 1:25

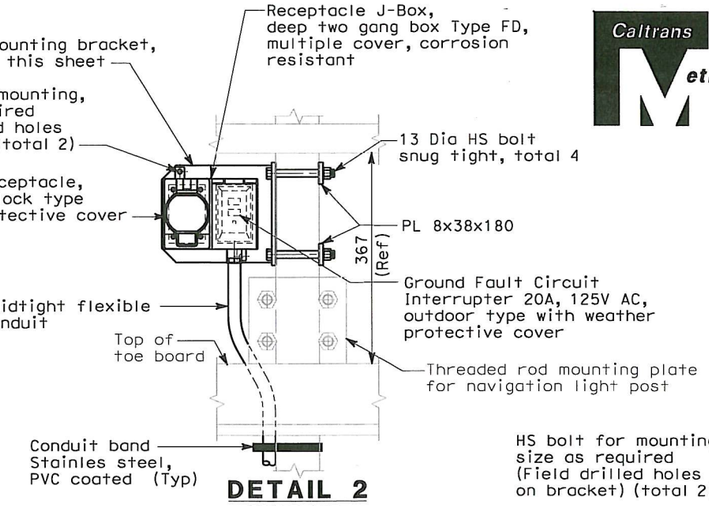

DETAIL 2
SCALE 1:5

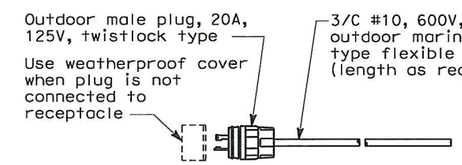

DETAIL 4
No Scale
LIGHTING FLEXIBLE CORD ASSEMBLY (Typical for 4)

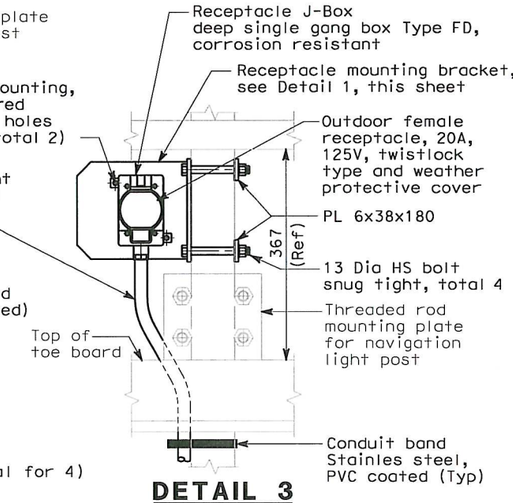

DETAIL 3
SCALE 1:5
Mating plug not shown.
For actual orientation of receptacle, see sheet E-292D
(Typical for 4)

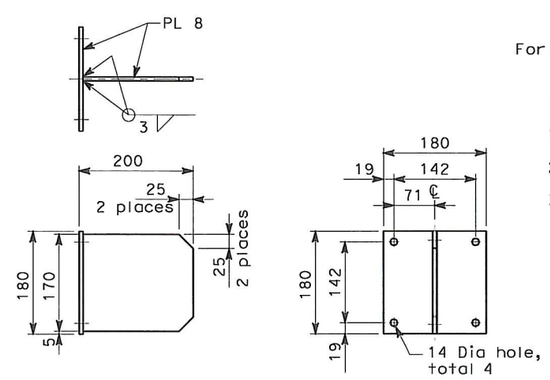

DETAIL 1
SCALE 1:5
RECEPTACLE MOUNTING BRACKET
(Bracket must be free from burrs and sharp edges)

NOTES:

1. For Sections A-A, B-B and C-C, see sheet E-292D.
2. All conduit connections shall be watertight.
3. All conduit bodies (fittings) shall be RGS PVC coated with gasket and cover.

REQUEST FOR INFORMATION NOT ADDRESSED IN THIS CCO REMAIN IN FORCE

MARK	DATE	DESCRIPTIONS	BY	CH'D	CCO#
0	08/13/10	TRAVELER MODIFICATIONS	TW	RG	137

REVISIONS

CONTRACT CHANGE ORDER NO. 137
SHEET 5 OF 7

DETAILS
NAVIGATION AND AVIATION WARNING SYSTEMS
E2/E3 TRAVELER ASSEMBLY EASTBOUND
SCALE AS NOTED

E-292E

DATE	REVISED BY	DATE	REVISED
08/10	TW	08/10	RG

CALCULATED/DESIGNED BY — CHECKED BY

DESIGN OVERSIGHT — BEHZAD GOLEMOHAMMADI

STATE OF CALIFORNIA - DEPARTMENT OF TRANSPORTATION — Caltrans

THIS PLAN ACCURATE FOR ELECTRICAL WORK ONLY.

ALL DIMENSIONS ARE IN MILLIMETERS UNLESS OTHERWISE SHOWN

FOR REDUCED PLANS ORIGINAL SCALE IS IN MILLIMETERS 0 20 40 60 80

DGN FILE =>O:\13103 SF_O Bay Bridge\A-SFOBB Work Files after 11-05\SAS\CCO CADD Working Files\CCO-137\Designer Files\04-0120f1_02
USERNAME =>Garciar

CU 04251 | EA 0120F1

LAST REVISION 00-00-00 | DATE PLOTTED => 8/13/2010 TIME PLOTTED => 8:48:15 AM

DIST	COUNTY	ROUTE	KILOMETER POST TOTAL PROJECT	SHEET No	TOTAL SHEETS
04	SF	80	13.2/13.9	295 R3	1204

Caltrans Metric

REGISTERED ELECTRICAL ENGINEER 12/19/02 DATE

12-6-04
PLANS APPROVAL DATE

REGISTERED PROFESSIONAL ENGINEER JENS ERLINGSSON No. 8249 Exp. 9/30/06 ELECTRICAL STATE OF CALIFORNIA

PB POWER, Inc.
A Parsons Brinckerhoff Company
303 Second St., Suite 700N
San Francisco, CA 94107-1317

The State of California or its officers or agents shall not be responsible for the accuracy or completeness of electronic copies of this plan sheet.

Caltrans now has a web site! To get to the web site, go to http://www.dot.ca.gov

AVIATION AND NAVIGATION LIGHTING FIXTURE SCHEDULE

Type	Description	Remarks
AV-1	Main Tower Marker Light FAA L-864, medium intensity, flashing, red, obstruction light. The light shall consist of a red lantern with six marine signal lamps controlled by a six-place microprocessor lamp changer. The flashing shall be at a rate of 20 flashes per minute. Input power shall be 480 VAC, single phase and be input to a transder.	
AV-2	Main Cable Marker Light FAA L-810, steady, red, obstruction light. The light shall consist of a red lantern with four marine signal lamps controlled by a four-place microprocessor lamp changer. Incoming power shall be 480 VAC, single phase and shall be input to a transformer.	
NV-1	Main Channel Marker Navigation Light shall consist of a green lantern with a 360-degree horizontal arc, with six marine signal lamps controlled by a six-place microprocessor lamp changer. Incoming power shall be 120 VAC, single phase and shall be input to a transformer. The rectified output shall be at 12 VDC to power the lamps. The housing shall be corrision-resistant and gasketed.	
NV-2	Channel Marker Navigation Light shall consist of a green lantern with a 360-degree horizontal arc, with six marine signal lamps controlled by a six-place microprocessor lamp changer. Incoming power shall be 120 VAC, single phase and shall be input to a transformer. The rectified output shall be at 12 VDC to power the lamps. The housing shall be corrosion-resistant and gasketed.	Not used in this contract.
NV-3	Navigation Pier Marker Light Consists of one (1) red signal lantern that show through a horizontal arc of 180 degrees controlled by four-place lampchanger. The housing shall be corrosion resistant and gasketed. Includes 120 V input power to transformer, and rectifier output to operate the lamps at 12 V DC. All lights shall conform to the latest provisions of Title 33 CFR Chapter 1, Section 118.60.	
2 3 NV-4	Red in color, with 360 degree visibility. Pharos Marine/Automatic Power FA-249 LED Bridge Lantern, 120VAC, with 3x4 LED Array, or approved equivalent.	To mark reduced vertical clearance under OBG Travelers.

REGISTERED PROFESSIONAL ENGINEER SYN YEE CHIN No. 18186 Exp. 09/30/2011 ELECTRICAL STATE OF CALIFORNIA

Syn Yee Chin
FOR REVISION ONLY
2 3

REGISTERED PROFESSIONAL ENGINEER FADI WALIEDDINE No. 11465 Exp. 12/31/2009 ELECTRICAL STATE OF CALIFORNIA

FOR REVISION ONLY
1

REQUEST FOR INFORMATION NOT ADDRESSED IN THIS CCO REMAIN IN FORCE

MARK	DATE	DESCRIPTIONS	BY	CH'D	CCO#
3	10/15/10	TRAVELER MODIFICATIONS	NK	RG	137
2	08/13/10	TRAVELER MODIFICATIONS	TW	RG	137
1	04/10/09	ELECTRICAL WARNING SYSTEMS	RY RR	RG FW	61

REVISIONS

CONTRACT CHANGE ORDER NO. 137
SHEET 6 OF 7

DETAILS
NAVIGATION AND AVIATION WARNING SYSTEMS LIGHTING FIXTURE SCHEDULE
NO SCALE

E-297

REVISED BY	DATE	DATE REVISED
EDC	10/01	11/01
KG		

CALCULATED/DESIGNED BY EDC
CHECKED BY KG

DESIGN OVERSIGHT
BEHZAD GOLEMOHAMMADI

STATE OF CALIFORNIA - DEPARTMENT OF TRANSPORTATION
Caltrans

LAST REVISION 00-00-00
DATE PLOTTED => 10/13/2010
TIME PLOTTED => 12:33:28 PM

FOR REDUCED PLANS ORIGINAL SCALE IS IN MILLIMETERS 0 20 40 60 80

DGN FILE =>T:\13103\MS\pse\SAS Struc\CCO\SAS CC0137\2010.10.15
USERNAME =>llorico
ssued for Submittal\04-0120f1 0295R03.dgn
CU 04251
EA 0120F1

DIST.	COUNTY	ROUTE	KILOMETER POST TOTAL PROJECT	SHEET NO.	TOTAL SHEETS
04	SF	80	13.2/13.9	1163S12	1204

REGISTERED ENGINEER - CIVIL

07-09-10
PLANS APPROVAL DATE

REGISTERED PROFESSIONAL ENGINEER — Alex E. Sanjines, No. C 051153, Exp. 9/30/11, CIVIL, STATE OF CALIFORNIA

The State of California or its officers or agents shall not be responsible for the accuracy or completeness of electronic copies of this plan sheet.

T.Y. LIN / MOFFATT & NICHOL
825 BATTERY STREET
SAN FRANCISCO, CA 94111

Caltrans now has a web site! To get to the web site, go to: http://www.dot.ca.gov

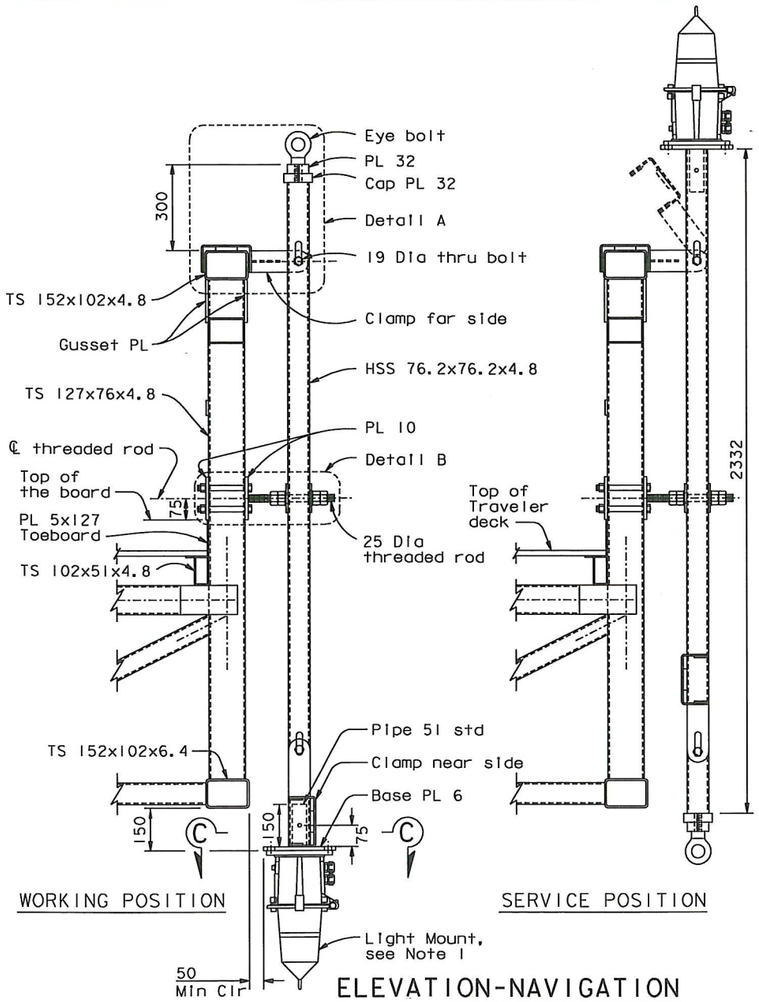

ELEVATION-NAVIGATION LIGHT MOUNT
1:10

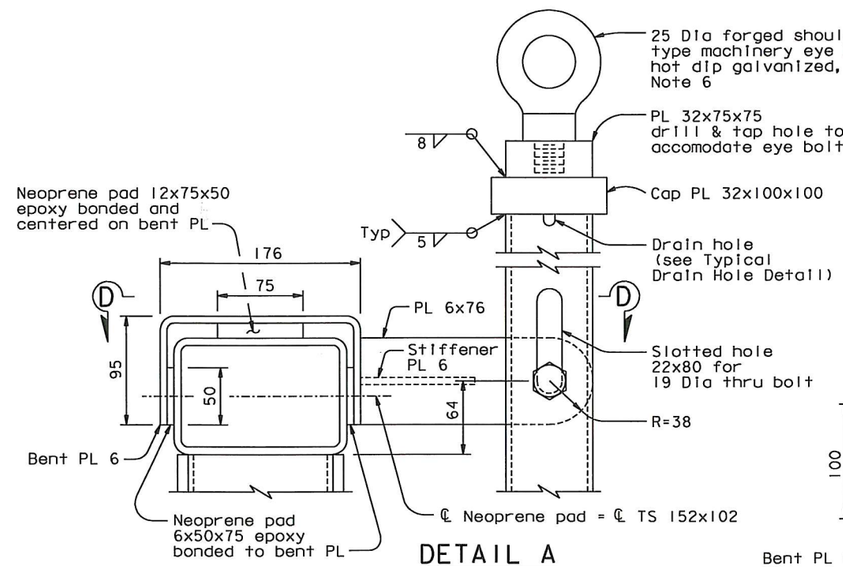

DETAIL A
1:2.5

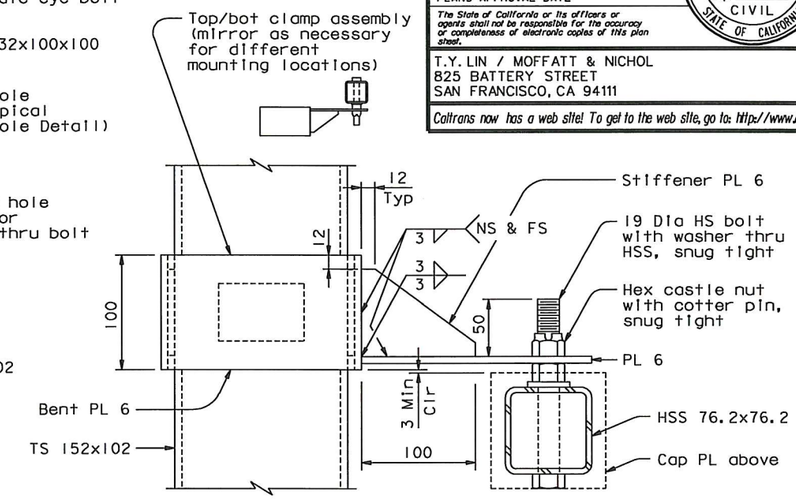

SECTION D-D
1:2.5

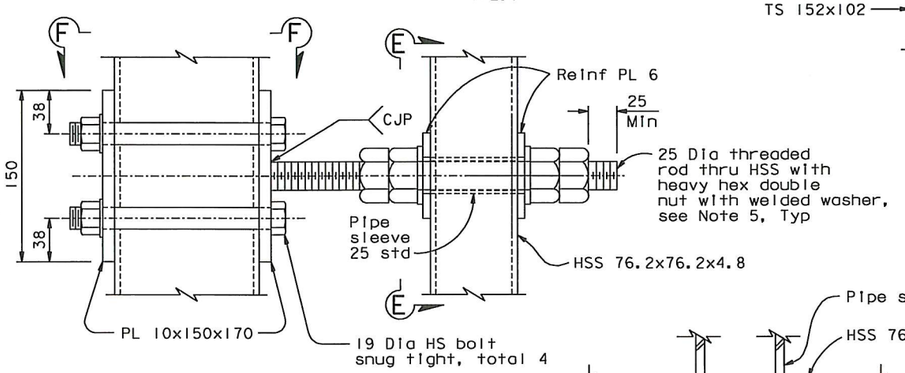

DETAIL B
1:2.5

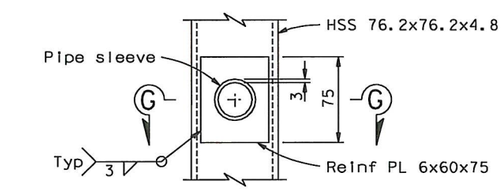

SECTION E-E
1:2.5

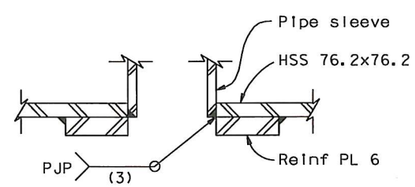

SECTION G-G
1:1

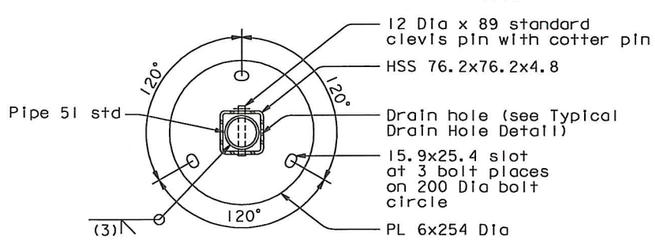

SECTION C-C
1:5

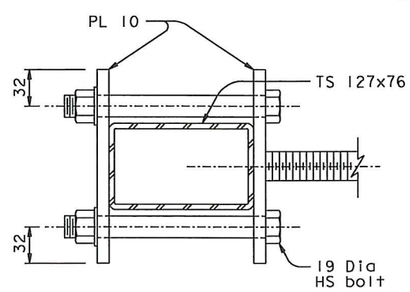

SECTION F-F
1:2.5

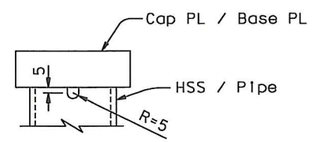

TYPICAL DRAIN HOLE DETAIL
1:2.5

ALL DIMENSIONS ARE IN MILLIMETERS UNLESS OTHERWISE SHOWN

NOTES

1. Install four Navigation Light mounts on each SAS and E2/E3 Traveler (Total 16).
2. All components shall be hot dip galvanized.
3. Threaded rod shall be ASTM A36M galvanized; HS bolt shall be ASTM A325M galvanized; Nuts shall be ASTM A563M galvanized and Washer shall be ASTM F436 galvanized.
4. For Traveler navigation light electrical details, see "Road Plans".
5. Nuts shall be tightened so as to allow rotation of HSS about ℄ threaded rod.
6. Nylon rope Min 9 Dia shall be used in conjunction with the eye bolt to control the swing of the light mount.

CONTRACT CHANGE ORDER NO. 137
SHEET 7 OF 7

REQUESTS FOR INFORMATION NOT ADDRESSED IN THIS CCO REMAIN IN FORCE

R. Vallzadeh/V. Toan/Y.L./W.L./F.C.
DESIGN OVERSIGHT
Ryan Vallzadeh / Vong P. Toan / Y. Liu
SIGN OFF DATE 07/09/10

MARK	DATE	DESCRIPTIONS	BY	CH'D	CCO#
0	07/09/10	TRAVELER NAVIGATION LIGHT	HP	AS	137

REVISIONS

	BY	CHECKED
DESIGN	H. Patel	A. Sanjines
DETAILS	H. Patel	A. Sanjines
QUANTITIES	H. Patel	A. Sanjines

PREPARED FOR THE STATE OF CALIFORNIA DEPARTMENT OF TRANSPORTATION

R. Manzanarez
PROJECT ENGINEER

BRIDGE NO. 34-0006L/R
KILOMETER POST 13.2/13.9

SAN FRANCISCO OAKLAND BAY BRIDGE
EAST SPAN SEISMIC SAFETY PROJECT
SELF-ANCHORED SUSPENSION BRIDGE
(SUPERSTRUCTURE & TOWER)

TRAVELER NAVIGATION LIGHT MOUNT DETAIL

Rev. Date: 5-18-98

ORIGINAL SCALE IN MILLIMETERS FOR REDUCED PLANS 0 10 20 30 40 50 60 70 80 90 100

CU 04
EA 0120F1

DISREGARD PRINTS BEARING EARLIER REVISION DATES 07/09/10

REVISION DATES (PRELIMINARY STAGE ONLY)

SHEET 746S12 OF

FILE => I:\bb\04-012001\sas\contract plans and cco\cco\cco#137\2-update 07-09-10\dgn\aktrv155s12.dgn

100 % PS&E

USERNAME => grivera DATE PLOTTED => 09 JUL 2010 TIME PLOTTED => 11:35:28