DIST	COUNTY	ROUTE	KILOMETER POST TOTAL PROJECT	SHEET No	TOTAL SHEETS
04	SF	80	13.2/13.9	140 R2	1204

REGISTERED ELECTRICAL ENGINEER 12/19/02 DATE

12-6-04
PLANS APPROVAL DATE

REGISTERED PROFESSIONAL ENGINEER JENS ERLINGSSON No. 8249 Exp. 9/30/06 ELECTRICAL STATE OF CALIFORNIA

PB POWER, Inc.
A Parsons Brinckerhoff Company
303 Second St., Suite 700N
San Francisco, CA 94107-1317

The State of California or its officers or agents shall not be responsible for the accuracy or completeness of electronic copies of this plan sheet.

Caltrans now has a web site! To get to the web site, go to http://www.dot.ca.gov

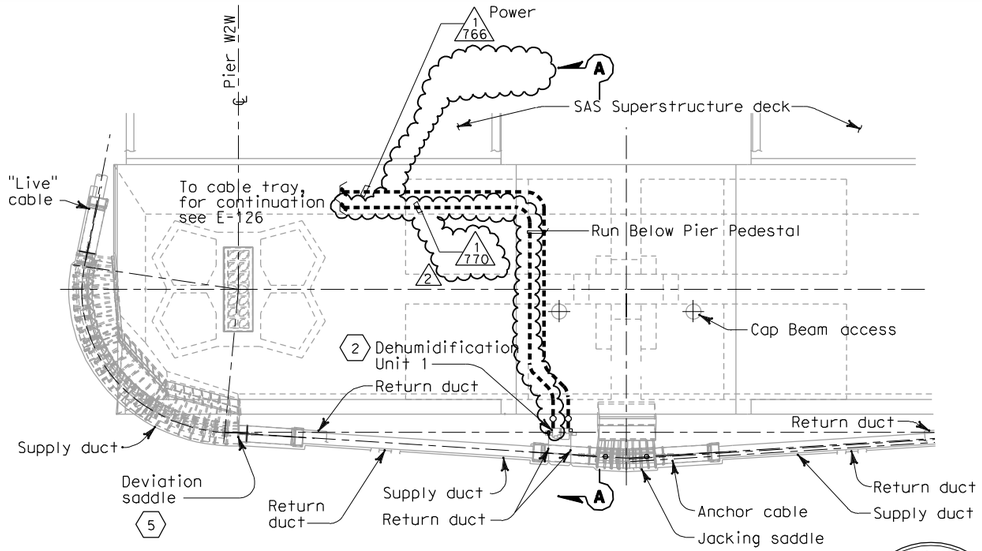

DEHUMIDIFICATION PLAN
NO SCALE

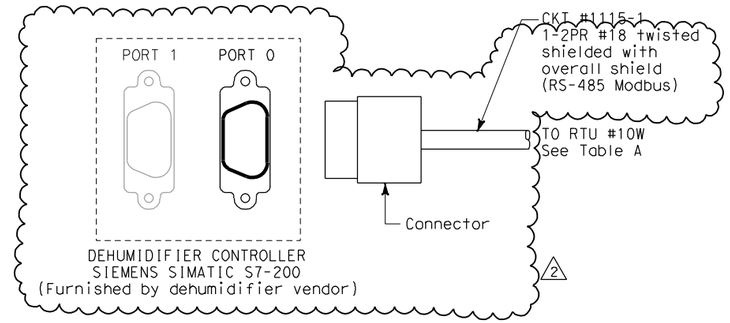

DEHUMIDIFICATION CONTROLLER
SHOWN FOR DEHUMIDIFICATION UNIT #1
FOR OTHER UNITS, SEE TABLE A

REGISTERED PROFESSIONAL ENGINEER S. A. ESTOQUE, JR. No. E-10151 Exp. 12/31/2008 ELECTRICAL STATE OF CALIFORNIA

FOR REVISION ONLY 1

REGISTERED PROFESSIONAL ENGINEER SYN YEE CHIN No. 18186 Exp. 09/30/2011 ELECTRICAL STATE OF CALIFORNIA

FOR REVISION ONLY 2

REQUEST FOR INFORMATION NOT ADDRESSED IN THIS CCO REMAIN IN FORCE					
2	03/26/10	DEHUMIDIFIER SCADA INTERFACE	RR	RG FW	130
1	02/25/08	CABLE TRAY CHANGES	TW	RG SE	42S1
MARK	DATE	DESCRIPTIONS	BY	CH'D	CCO#
		REVISIONS			

CONTRACT CHANGE ORDER NO._____
SHEET _____ OF _____

SHEET NOTES:

1. Route power and ~~TOS/COM~~ 2 conduits and cables ~~from dehumidifier to cable trays 1T29 and 1T49 respectively below the girder for circuits #1115 and #1115-1.~~ 2
2. Dehumidification Unit 1 is 480 V, 3 phase, 16 kW (estimated load) with integral circuit breaker disconnect.
3. Final connections to dehumidifier shall be liquid tight flexible metal conduit.
4. ~~For pull boxes information, see pull boxes schedule sheet E-83.~~ 2
5. Views of Deviation Saddle are for illustration only. For Deviation Saddle details, see "West Deviation Saddle Details" sheets.

NOTES:

1. References:
   - See sheets M001 through M011 for dehumidifier plans and details.
   - See sheet E-29 for dehumidifier single line diagram (circuit #1115).

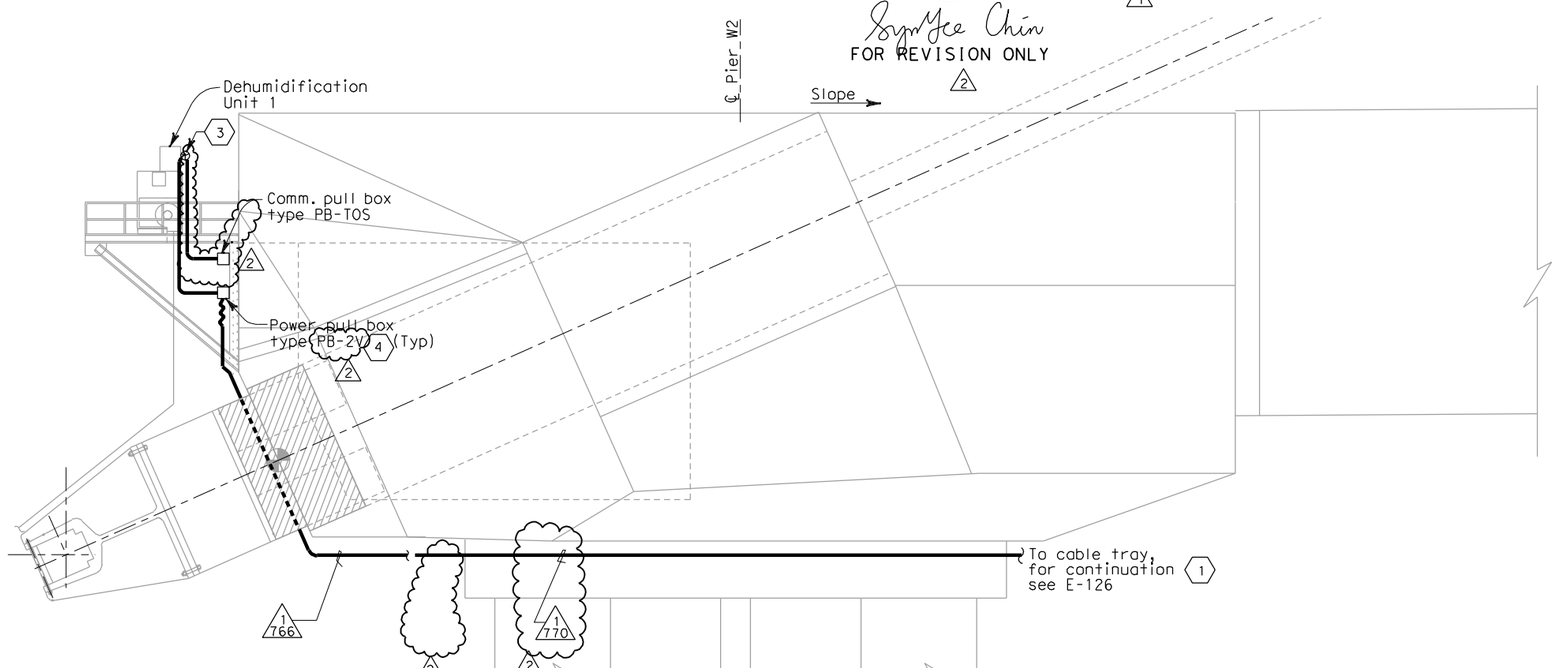

SECTION A-A
NO SCALE

TABLE A

EQUIPMENT	CIRCUIT NO.	RTU CAB.	DWG NO.
Dehumidification Unit #1	1115-1	RTU #10W	E-330 2
Dehumidification Unit #2	2120-1	RTU #10E	E-331 2
Dehumidification Unit #3	1117-1	RTU #11W	E-332 2
Dehumidification Unit #4	1118-1	RTU #11W	E-332 2
Dehumidification Unit #5	See sheet E-287A 2		

DETAILS
SAS SUPERSTRUCTURE ROADWAY WESTBOUND DEHUMIDIFIER UNIT 1
SCALE AS NOTED

E-79

THIS PLAN ACCURATE FOR ELECTRICAL WORK ONLY.

STATE OF CALIFORNIA - DEPARTMENT OF TRANSPORTATION
Caltrans

DESIGN OVERSIGHT: BEHZAD GOLEMOHAMMADI

CALCULATED/DESIGNED BY: KG | DATE 12/01 | REVISED BY
CHECKED BY: FK | 12/01 | DATE REVISED

LAST REVISION 00-00-00 | DATE PLOTTED => 4/26/2010 | TIME PLOTTED => 1:21:39 PM

FOR REDUCED PLANS ORIGINAL SCALE IS IN MILLIMETERS 0 20 40 60 80

DGN FILE =>t:\13103\ms\pse\SAS Struc\CCO\SAS CCO130\2010-04-26 CCO 130 Submittal\04-0120f1_01 40R02.dgn
USERNAME =>llorico

CU 04251 | EA 0120F1