DIST.	COUNTY	ROUTE	KILOMETER POST TOTAL PROJECT	SHEET NO.	TOTAL SHEETS
04	SF	80	13.2/13.9	932S2R1	1204

REGISTERED ENGINEER - CIVIL

10-30-09
PLANS APPROVAL DATE

REGISTERED PROFESSIONAL ENGINEER Marwan N. Nader No. C 054426 Exp. 12/31/11 CIVIL STATE OF CALIFORNIA

The State of California or its officers or agents shall not be responsible for the accuracy or completeness of electronic copies of this plan sheet.

T.Y. LIN / MOFFATT & NICHOL
825 BATTERY STREET
SAN FRANCISCO, CA 94111

Caltrans now has a web site! To get to the web site, go to: http://www.dot.ca.gov

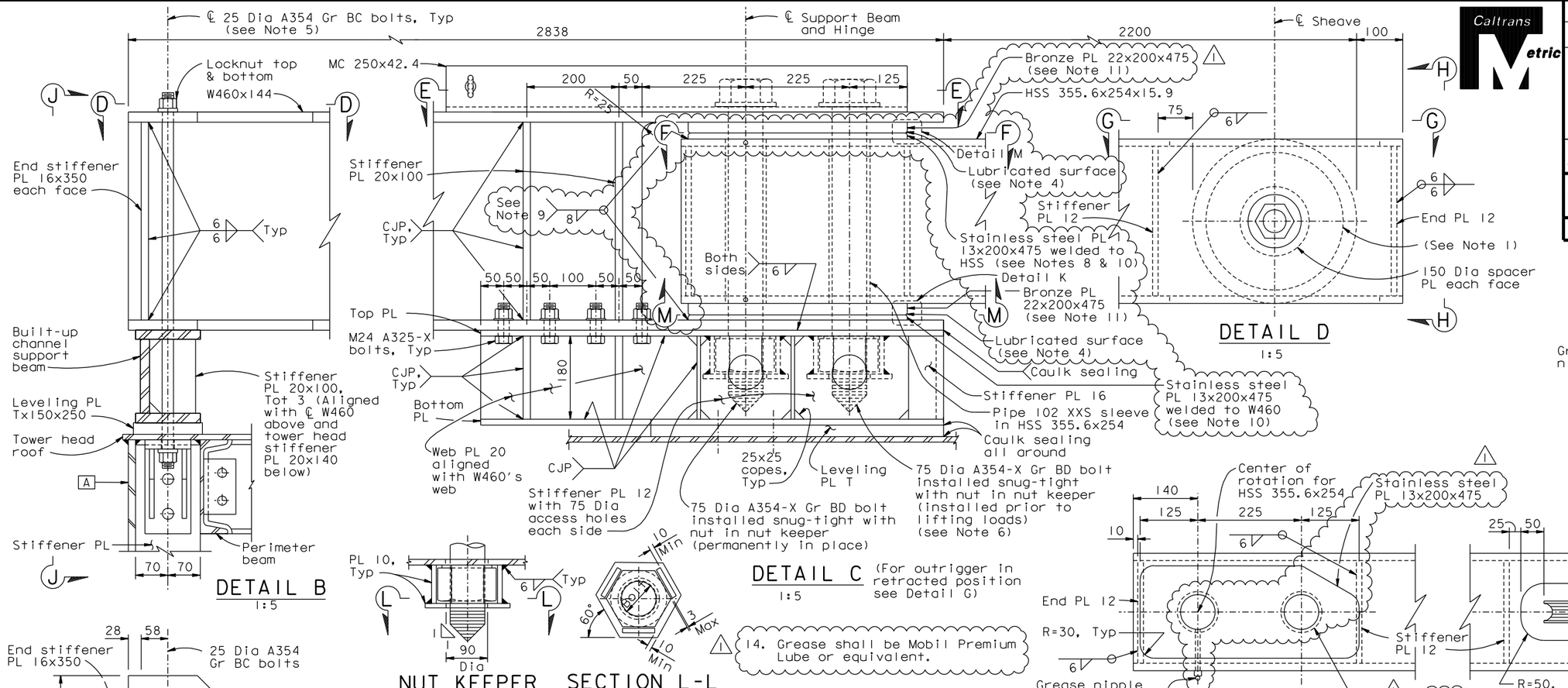

NOTES:

1. Sheave shall be min 350 mm Dia with a minimum unfactored service load of 75 kN.
2. Groove width shall be determined by manufacturer to accommodate the wire line capable of lifting the unfactored service load. Sheave shall be supplied with a roller bearing, a tapered roller bearing or a roller bearing with thrust washer. The sheave manufacturers shall provide the fasteners and/or pin for the sheave.
3. For Section J-J, see "Tower Access Details No.16C" sheet.
4. Self-lubricated lubricant shall be applied to bronze plate.
5. 24 Dia A354 Gr BC bolts shall be pretensioned to 50% of their ultimate tensile strength.
6. Zinc wax or grease threaded components.
7. The hole size shall confirm with Section 55-3.15 "Pin Connections" of the Standard Specifications.
8. Adjust thickness of the stainless steel plate as necesarry to ensure bearing on the bronze PL.
9. Paint shall be applied to the surface of the fillet welds.
10. Stainless steel plates shall be ASTM A240 Type 316L.
11. Bronze plates shall be ASTM B22-C86300.
12. Terminate Pipe 102 XXS sleeve at exterior faces of HSS and weld to HSS.
13. For Detail K and Section M-M, see "Tower Access Details No.16D" sheet.

CONTRACT CHANGE ORDER NO. _____
SHEET ____ OF ____

REQUESTS FOR INFORMATION NOT ADDRESSED IN THIS CCO REMAIN IN FORCE

ALL DIMENSIONS ARE IN MILLIMETERS UNLESS OTHERWISE SHOWN

R. Valizadeh/V. Toan/Y.L./W.L./F.C.
DESIGN OVERSIGHT
SIGN OFF DATE 06/14/11

MARK	DATE	DESCRIPTIONS	BY	CH'D	CCO#
1	06/14/11	TOWER BOOM BEARINGS	CC	MN	128S1
0	10/30/09	TOWER MAINTENANCE ENHANCEMENTS	JC	MN	128

REVISIONS

	BY	CHECKED
DESIGN	J. Chan	M. Nader
DETAILS	G. Mok	C. Choi
QUANTITIES	M. Neal	J. Wu

PREPARED FOR THE STATE OF CALIFORNIA DEPARTMENT OF TRANSPORTATION

R. Manzanarez
PROJECT ENGINEER

BRIDGE NO. 34-0006L/R
KILOMETER POST 13.2/13.9

SAN FRANCISCO OAKLAND BAY BRIDGE
EAST SPAN SEISMIC SAFETY PROJECT
SELF-ANCHORED SUSPENSION BRIDGE
(SUPERSTRUCTURE & TOWER)

TOWER ACCESS DETAILS NO. 16B

Rev. Date: 5-18-98

ORIGINAL SCALE IN MILLIMETERS FOR REDUCED PLANS 0 10 20 30 40 50 60 70 80 90 100

CU 04
EA 0120F1

DISREGARD PRINTS BEARING EARLIER REVISION DATES 10/30/09

REVISION DATES (PRELIMINARY STAGE ONLY)

SHEET 515S2R1 OF

FILE => I:\bb\04-012001\sas\contract plans and cco\cco\cco*128s1\1-original 06-14-11\dgn\akacc16s2.dgn

USERNAME => arivera DATE PLOTTED => 14 JUN 2011 TIME PLOTTED => 11:01:44

100 % PS&E

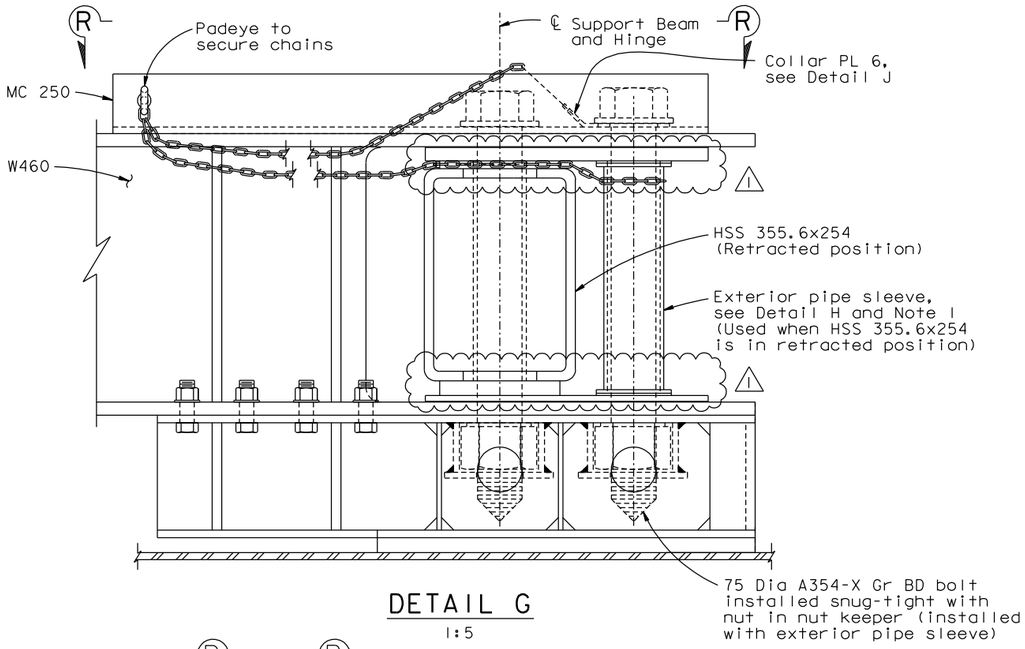

DETAIL G
1:5

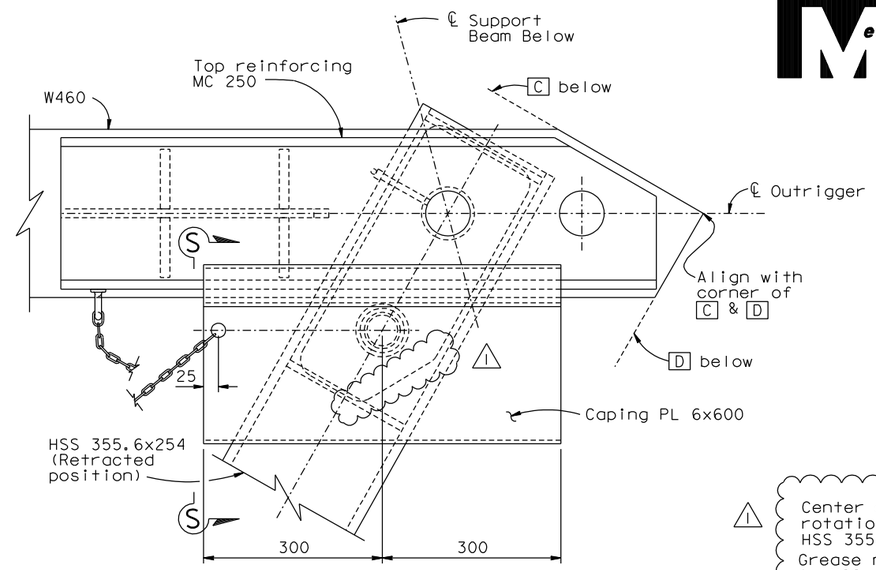

SECTION R-R
1:5

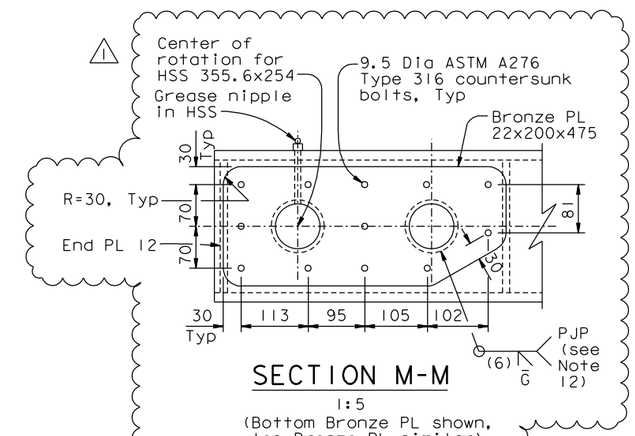

SECTION M-M
1:5
(Bottom Bronze PL shown, top Bronze PL similar)

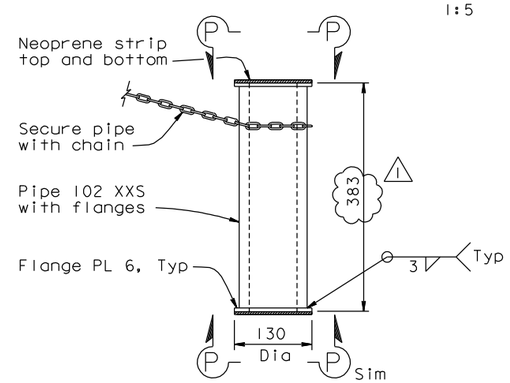

DETAIL H
1:5

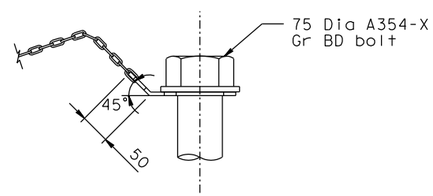

SECTION Q-Q
1:5

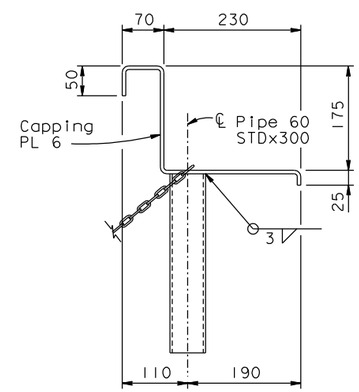

SECTION S-S
1:5

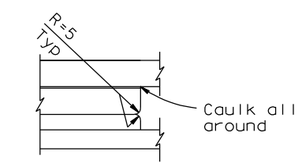

DETAIL K
1:2.5

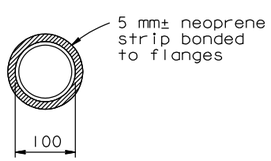

SECTION P-P
1:5

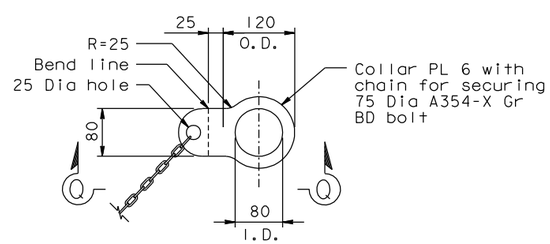

DETAIL J
1:5

NOTES:

1. The exterior pipe sleeve shall be placed to bear on the flanges of W460. Adjust thickness of neoprene strips as needed.

CONTRACT CHANGE ORDER NO. _____
SHEET ____ OF ____

REQUESTS FOR INFORMATION NOT ADDRESSED IN THIS CCO REMAIN IN FORCE

ALL DIMENSIONS ARE IN MILLIMETERS UNLESS OTHERWISE SHOWN

DIST.	COUNTY	ROUTE	KILOMETER POST TOTAL PROJECT	SHEET NO.	TOTAL SHEETS
04	SF	80	13.2/13.9	932S4R1	1204

REGISTERED ENGINEER - CIVIL
10-30-09
PLANS APPROVAL DATE

REGISTERED PROFESSIONAL ENGINEER Marwan N. Nader No. C 054426 Exp. 12/31/11 CIVIL STATE OF CALIFORNIA

The State of California or its officers or agents shall not be responsible for the accuracy or completeness of electronic copies of this plan sheet.

T.Y. LIN / MOFFATT & NICHOL
825 BATTERY STREET
SAN FRANCISCO, CA 94111

Caltrans now has a web site! To get to the web site, go to: http://www.dot.ca.gov

MARK	DATE	DESCRIPTIONS	BY	CH'D	CCO#
1	06/14/11	TOWER BOOM BEARINGS	CC	MN	128S1
0	10/30/09	TOWER MAINTENANCE ENHANCEMENTS	JC	MN	128

REVISIONS

R. Valizadeh/V. Toan/Y.L./W.L./F.C.
DESIGN OVERSIGHT
SIGN OFF DATE 06/14/11

	BY	CHECKED
DESIGN	J. Chan	M. Nader
DETAILS	G. Mok	C. Choi
QUANTITIES	M. Neal	R. Boundouki

PREPARED FOR THE STATE OF CALIFORNIA DEPARTMENT OF TRANSPORTATION

R. Manzanarez
PROJECT ENGINEER

BRIDGE NO. 34-0006L/R
KILOMETER POST 13.2/13.9

SAN FRANCISCO OAKLAND BAY BRIDGE
EAST SPAN SEISMIC SAFETY PROJECT
SELF-ANCHORED SUSPENSION BRIDGE
(SUPERSTRUCTURE & TOWER)

TOWER ACCESS DETAILS NO. 16D

Rev. Date: 5-18-98

ORIGINAL SCALE IN MILLIMETERS FOR REDUCED PLANS 0 10 20 30 40 50 60 70 80 90 100

CU 04
EA 0120F1

DISREGARD PRINTS BEARING EARLIER REVISION DATES 10/30/09

REVISION DATES (PRELIMINARY STAGE ONLY)

SHEET 515S4R1 OF

FILE => I:\bb\04-012001\sas\contract plans and cco\cco\cco#128s1\1-original 06-14-11\dgn\akacc16s4.dgn

100 % PS&E

USERNAME => orlvera DATE PLOTTED => 14 JUN 2011 TIME PLOTTED => 11:02:29