DIST.	COUNTY	ROUTE	KILOMETER POST TOTAL PROJECT	SHEET NO.	TOTAL SHEETS
04	SF	80	13.2/13.9	704R1	1204

Caltrans Metric

George Baker
REGISTERED ENGINEER - CIVIL
12-6-04
PLANS APPROVAL DATE

REGISTERED PROFESSIONAL ENGINEER George S. Baker No. C 57112 Exp. 12/31/05 CIVIL STATE OF CALIFORNIA

The State of California or its officers or agents shall not be responsible for the accuracy or completeness of electronic copies of this plan sheet.

T.Y. LIN / MOFFATT & NICHOL
825 BATTERY STREET
SAN FRANCISCO, CA 94111

Caltrans now has a web site! To get to the web site, go to: http://www.dot.ca.gov

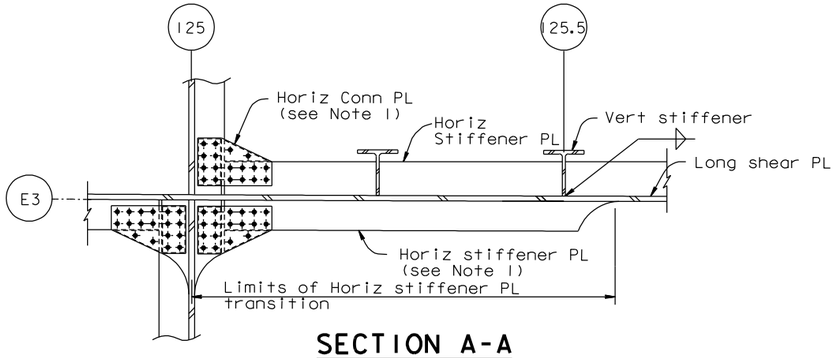

SECTION A-A
1:20

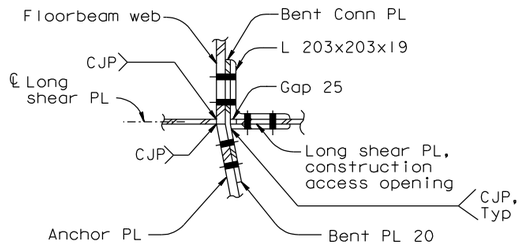

SECTION B-B
1:10

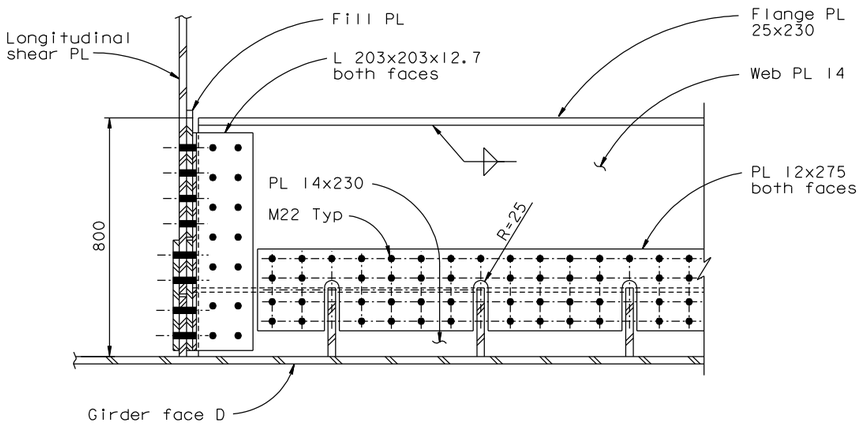

SECTION C-C
1:10

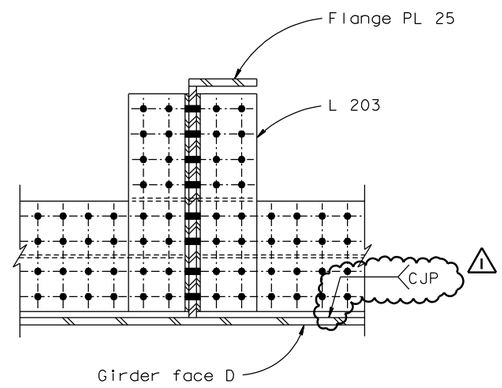

DETAIL D
1:10

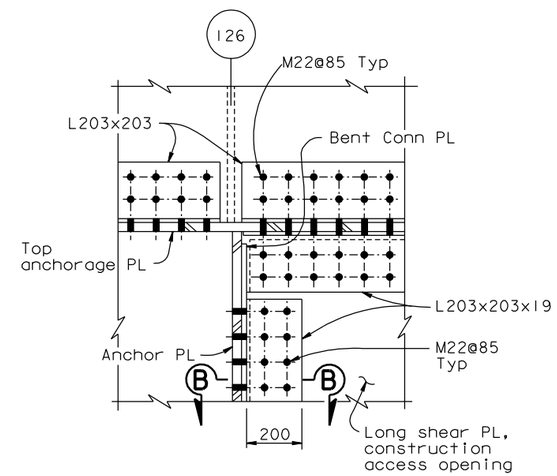

DETAIL E
1:10

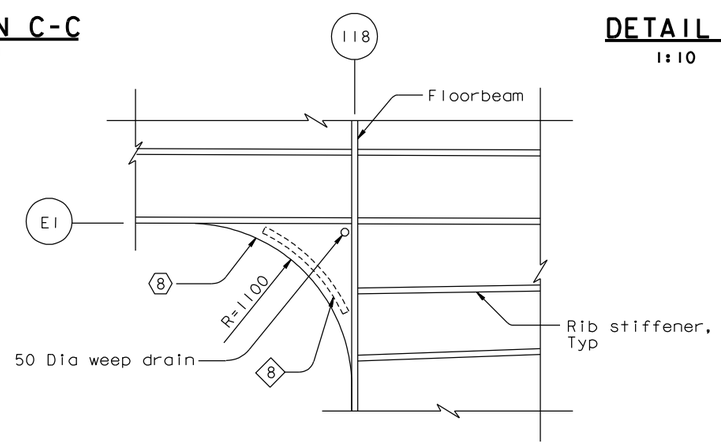

DETAIL F
1:20

NOTES:

1. For horizontal connection plate detail, see "Typical Girder Details No.9" sheet.

REGISTERED PROFESSIONAL ENGINEER Daniel J. Turner No. C 65033 Exp. 06/30/11 CIVIL STATE OF CALIFORNIA

FOR REVISIONS ONLY

CONTRACT CHANGE ORDER NO. ____
SHEET ___ OF ___

REQUESTS FOR INFORMATION NOT ADDRESSED IN THIS CCO REMAIN IN FORCE

ALL DIMENSIONS ARE IN MILLIMETERS UNLESS OTHERWISE SHOWN

MARK	DATE	DESCRIPTIONS	BY	CH'D	CCO#
1	07/31/09	LONGITUDINAL SHEAR PLATE	DT	GB	122

REVISIONS

R. Valizadeh/V. Toan/Y.L./W.L./F.C.
DESIGN OVERSIGHT
Roy Valizadeh / Vong P. Toan / Y. Liu
SIGN OFF DATE 07/31/09

	BY		CHECKED	
DESIGN	BY	G. Baker	CHECKED	P. Ritchie
DETAILS	BY	D. Veytsman	CHECKED	T. McMeans
QUANTITIES	BY	G. Baker	CHECKED	M. Roberts

PREPARED FOR THE STATE OF CALIFORNIA DEPARTMENT OF TRANSPORTATION

R. Manzanarez
PROJECT ENGINEER

BRIDGE NO. 34-0006L/R
KILOMETER POST 13.2/13.9

SAN FRANCISCO OAKLAND BAY BRIDGE
EAST SPAN SEISMIC SAFETY PROJECT
SELF-ANCHORED SUSPENSION BRIDGE
(SUPERSTRUCTURE & TOWER)

GIRDER AT EAST TRANSITION DETAILS NO. 4

Rev. Date: 5-18-98

ORIGINAL SCALE IN MILLIMETERS FOR REDUCED PLANS 0 10 20 30 40 50 60 70 80 90 100

CU 04
EA 0120F1

DISREGARD PRINTS BEARING EARLIER REVISION DATES 04/08/02 07/04/02 12/19/02

SHEET 287R1 OF

FILE => I:\bb\04-0120F1\sas\contract plans and cco\cco\cco#122\1-original 07-31-09\dgn\agand15.dgn

100 % PS&E

DATE PLOTTED => 03 AUG 2009 TIME PLOTTED => 15:06:20

USERNAME => dwinrow