DIST.	COUNTY	ROUTE	KILOMETER POST TOTAL PROJECT	SHEET NO.	TOTAL SHEETS
04	SF	80	13.2/13.9	633R2	1204

Caltrans Metric

George Baker
REGISTERED ENGINEER - CIVIL
12-6-04
PLANS APPROVAL DATE

REGISTERED PROFESSIONAL ENGINEER George S. Baker No. C57112 Exp. 12/31/05 CIVIL STATE OF CALIFORNIA

The State of California or its officers or agents shall not be responsible for the accuracy or completeness of electronic copies of this plan sheet.

T.Y. LIN / MOFFATT & NICHOL
825 BATTERY STREET
SAN FRANCISCO, CA 94111

Caltrans now has a web site! To get to the web site, go to: http://www.dot.ca.gov

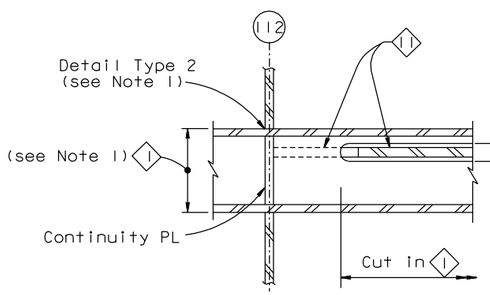

SECTION K-K
1:5

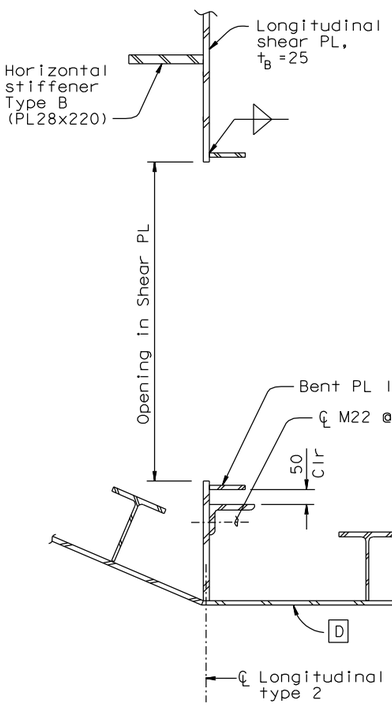

SECTION E-E
1:10

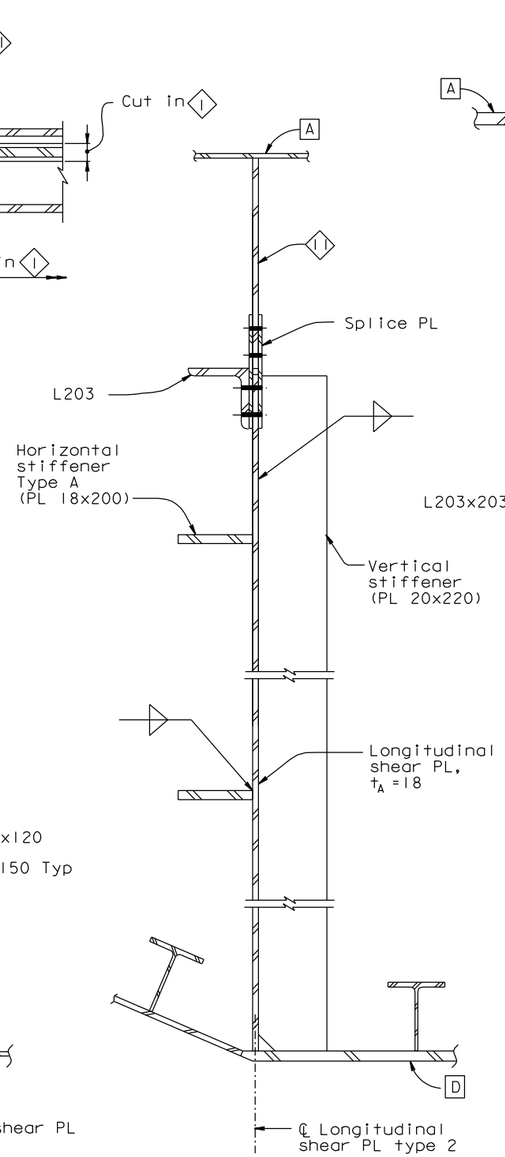

SECTION F-F
1:10

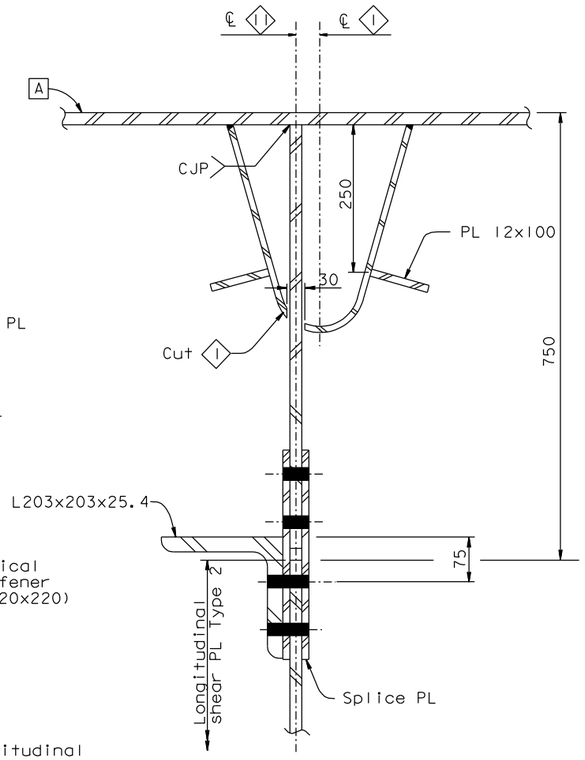

SECTION J-J
1:5

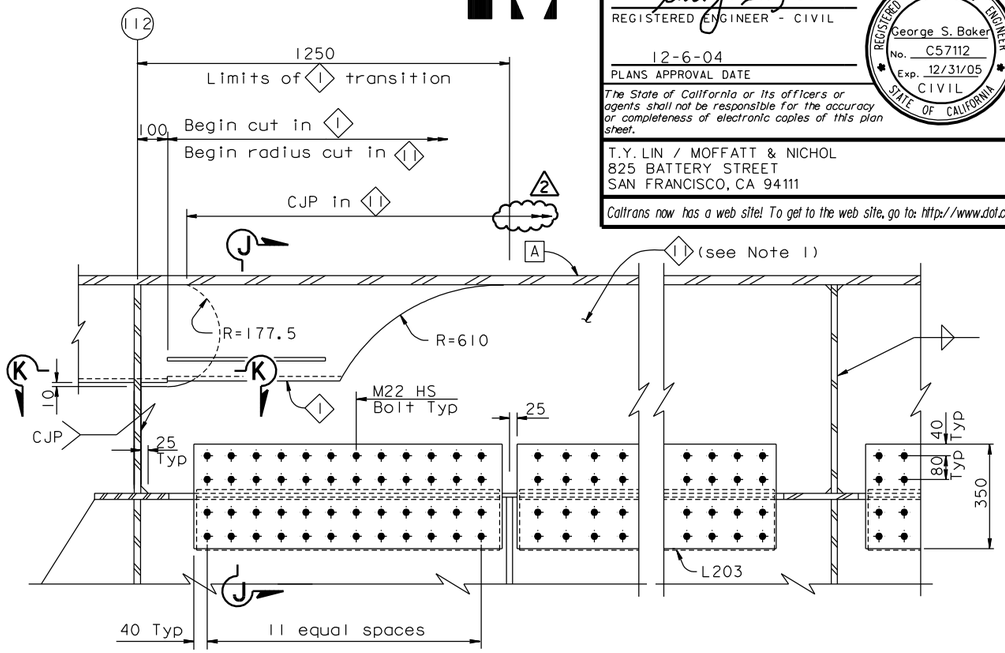

TRANSITION @ PP112 SHOWN
PP14 SIMILAR

DETAIL B
1:10

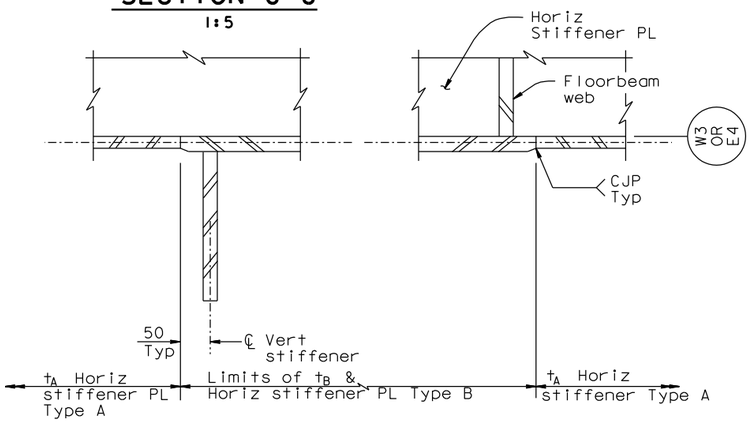

SECTION G-G
1:5

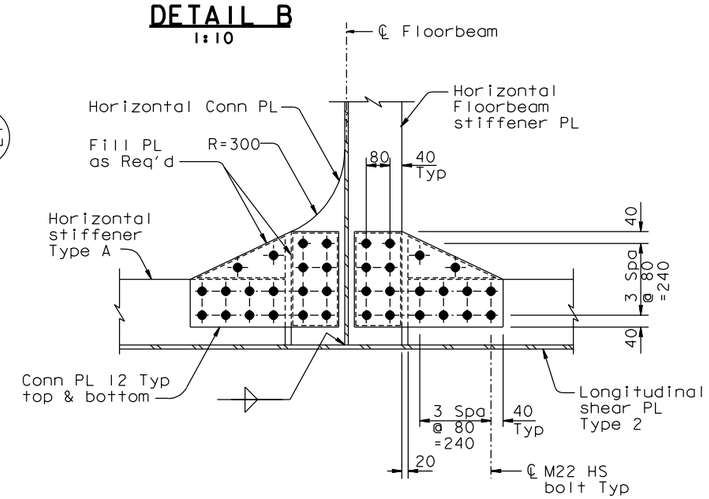

HORIZONTAL CONNECTION PLATE DETAIL

SECTION H-H
1:10

NOTES:

1. For details of 1 and 11, see "Typical Girder Details No. 3" and "Typical Girder Details No. 4" sheets.

Daniel J. Turner
REGISTERED PROFESSIONAL ENGINEER Daniel J. Turner No. C 65033 Exp. 06/30/11 CIVIL STATE OF CALIFORNIA

FOR REVISIONS ONLY

CONTRACT CHANGE ORDER NO. ____
SHEET ___ OF ___

REQUESTS FOR INFORMATION NOT ADDRESSED IN THIS CCO REMAIN IN FORCE

ALL DIMENSIONS ARE IN MILLIMETERS UNLESS OTHERWISE SHOWN

R. Valizadeh/V. Toan/Y.L./W.L./F.C.
DESIGN OVERSIGHT
Ryan Valizadeh / Vong Toan / Y. Liu
SIGN OFF DATE 07/31/09

Rev. Date: 5-18-98

MARK	DATE	DESCRIPTIONS	BY	CH'D	CCO#
2	07/31/09	LONGITUDINAL SHEAR PLATE	DT	GB	122
1	07/30/07	HINGE A REACTION-SHEAR PLATES	DT	GB	50

REVISIONS

DESIGN	BY G. Baker	CHECKED P. Ritchie	
DETAILS	BY S. Camo	CHECKED T. McMeans	
QUANTITIES	BY G. Baker	CHECKED M. Roberts	

PREPARED FOR THE STATE OF CALIFORNIA DEPARTMENT OF TRANSPORTATION

R. Manzanarez
PROJECT ENGINEER

BRIDGE NO. 34-0006L/R
KILOMETER POST 13.2/13.9

SAN FRANCISCO OAKLAND BAY BRIDGE
EAST SPAN SEISMIC SAFETY PROJECT
SELF-ANCHORED SUSPENSION BRIDGE
(SUPERSTRUCTURE & TOWER)

TYPICAL GIRDER DETAILS NO. 9

ORIGINAL SCALE IN MILLIMETERS FOR REDUCED PLANS 0 10 20 30 40 50 60 70 80 90 100

CU 04
EA 0120F1

DISREGARD PRINTS BEARING EARLIER REVISION DATES

REVISION DATES (PRELIMINARY STAGE ONLY) 05/31/01 04/08/02 07/01/02 12/19/02

SHEET 216R2 OF

FILE => I:\bb\04-012001\sas\contract plans and cco\cco\cco#122\1-original 07-31-09\dgn\agdkd05a.dgn

100% PS&E

USERNAME => dwinrow DATE PLOTTED => 03 AUG 2009 TIME PLOTTED => 15:10:13