DIST.	COUNTY	ROUTE	KILOMETER POST TOTAL PROJECT	SHEET NO.	TOTAL SHEETS
04	SF	80	13.2/13.9	627R1	1204

George Baker
REGISTERED ENGINEER - CIVIL
12-6-04
PLANS APPROVAL DATE

REGISTERED PROFESSIONAL ENGINEER George S. Baker No. C57112 Exp. 12/31/05 CIVIL STATE OF CALIFORNIA

The State of California or its officers or agents shall not be responsible for the accuracy or completeness of electronic copies of this plan sheet.

T.Y. LIN / MOFFATT & NICHOL
825 BATTERY STREET
SAN FRANCISCO, CA 94111

Caltrans now has a web site! To get to the web site, go to: http://www.dot.ca.gov

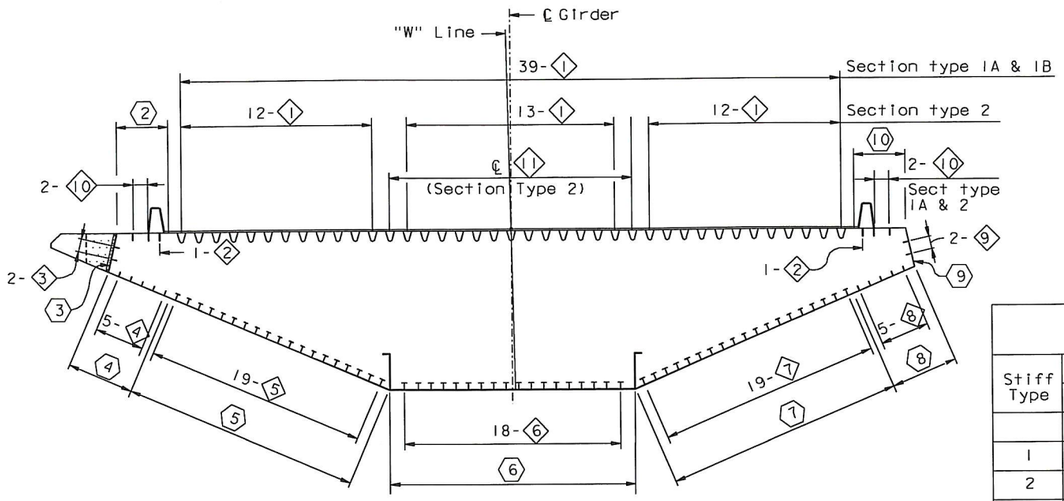

("W" LINE SECTION TYPE 1A SHOWN. SEE NOTE 1)

TYPICAL SECTION

1:100

GIRDER STIFFENER SIZE TABLE

Stiff Type	PANEL POINT										
	West Transition	Main Span				East Transition					
	8-10	10-14	14-30	30-112	112-115	115-118	118-120	120-122	122-125	125-127	127-Hinge A
1	Varies	Rib 12	Rib 12	Rib 12	Rib 12	Rib 12	Rib 12	Rib 12	Rib 12	Rib 12	Rib 12
2	PL 35x275	PL 35x275	PL 35x275	PL 35x275	PL 35x275	PL 35x275	PL 35x275	PL 35x275	PL 35x275	PL 35x275	PL 35x275
3	PL 22x200	PL 20x180	PL 22x200	PL 28x260	PL 20x180	PL 22x200	NA	NA	NA	NA	NA
4	PL 22x200	PL 22x200	PL 22x200	PL 22x200	PL 20x180	PL 22x200	PL 25x230	PL 20x180	NA	NA	NA
5	PL 25x230	PL 22x200	WT 265x42.5	WT 265x42.5	WT 265x42.5	WT 265x42.5	PL 25x230	PL 22x200	PL 22x200	PL 22X200	PL 16x140
6	PL 35x320	PL 35x320	WT 265x42.5	WT 265x42.5	WT 305x46	WT 305x46	PL 28x255	PL 25x230	PL 25x230	PL 25x230	PL 25x230
7	PL 25x230	PL 22x200	WT 230x34	WT 230x34	WT 230x34	WT 265x42.5	PL 22x200	PL 22x200	PL 20x180	PL 20x180	PL 16x140
8	PL 22x200	PL 22x200	PL 20x180	PL 20x170	PL 20x180	PL 22x185	PL 20x180	PL 22x200	PL 20x180	PL 20x180	PL 16x140
9	PL 22x200	PL 20x180	PL 20x180	PL 18x170	PL 20x180	PL 22x200	PL 22x185	PL 22x185	PL 22x185	PL 22x185	PL 22x185
10	PL 30x235	PL 30x235	PL 30x235	PL 30x235	PL 30x235	PL 30x235	PL 30x235	PL 30x235	PL 30x235	PL 30x235	PL 30x235
13	NA	NA	NA	NA	NA	PL 25x230	PL 28x255	PL 25x230	PL 25x230	PL 25x230	PL 20x180
14	NA	NA	NA	NA	NA	PL 25x230	PL 28x255	PL 22x200	PL 20x180	PL 20x180	PL 20x180
15	NA	NA	NA	NA	NA	NA	PL 16x140	PL 16x140	PL 16x140	PL 16x140	NA
16	NA	NA	NA	NA	NA	NA	NA	PL 16x140	PL 16x140	PL 25x230	PL 16x140
17	NA	NA	NA	NA	NA	NA	PL 16x140	PL 16x140	PL 16x140	PL 22x200	PL 18x170
18	NA	NA	NA	NA	NA	NA	PL 18x155	PL 18x155	PL 18x155	NA	PL 18x170
11	PL 18	PL 18	NA	NA	PL 18	(see Note 3)					
12	NA	NA	NA	NA	NA	NA	NA	NA	NA	PL 22 UNO	NA

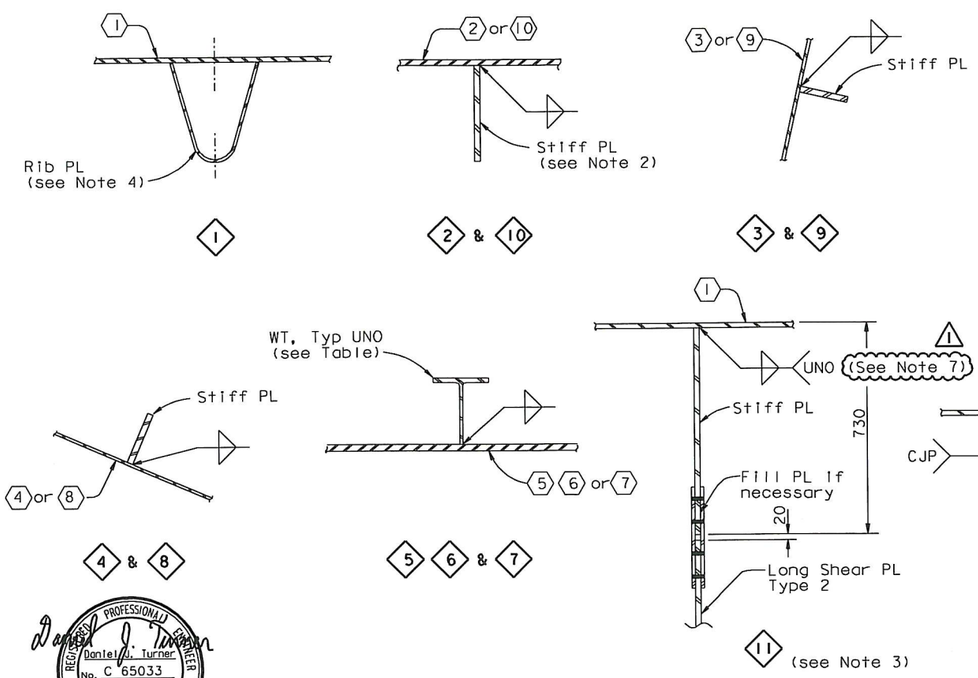

NOTES:

1. For stiffener layout in girder section Type 1B, see "Partial Typical Section No. 3" sheet. For stiffener layout of east transition girder, see "Girder At East Transition" sheets.
2. Stiffener types 2 and 10 shall be ASTM A709M HPS Grade 485W steel.
3. For details of stiffener type 11 not shown, see "Girder At East Transition No. 9", "Girder At East Transition No. 15" and "Girder At East Transition No. 16" sheets.
4. For details of stiffener type 1, see "Typical Girder Details No. 4" sheet.
5. For details of longitudinal shear plates, see "Typical Girder Details No. 7" sheet.
6. For details of stiffener type 12 not shown, see "Girder At East Transition No. 5", "Girder At East Transition No. 6" and "Girder At East Transition No. 17" sheets.
7. This weld shall be CJP from PP112 to PP128.3.

LEGEND:

1 Girder plate type 1

1 Girder stiffener type 1

STIFFENER DETAILS

1:10

Daniel J. Turner
REGISTERED PROFESSIONAL ENGINEER Daniel J. Turner No. C 65033 Exp. 06/30/11 CIVIL STATE OF CALIFORNIA

FOR REVISIONS ONLY

CONTRACT CHANGE ORDER NO. 122
SHEET 2 OF 9

REQUESTS FOR INFORMATION NOT ADDRESSED IN THIS CCO REMAIN IN FORCE

ALL DIMENSIONS ARE IN MILLIMETERS UNLESS OTHERWISE SHOWN

R. Vallizadeh/V. Toan/Y.L./W.L./F.C.
DESIGN OVERSIGHT
Roya Vallizadeh / Vong Toan / Y. Liu
SIGN OFF DATE 07/31/09

MARK	DATE	DESCRIPTIONS	BY	CH'D	CCO#
1	07/31/09	LONGITUDINAL SHEAR PLATE	DT	GB	122

REVISIONS

	BY	CHECKED
DESIGN	G. Baker	P. Ritchie
DETAILS	S. Camo	T. McMeans
QUANTITIES	G. Baker	M. Roberts

PREPARED FOR THE STATE OF CALIFORNIA DEPARTMENT OF TRANSPORTATION

R. Manzanarez
PROJECT ENGINEER

BRIDGE NO. 34-0006L/R
KILOMETER POST 13.2/13.9

SAN FRANCISCO OAKLAND BAY BRIDGE
EAST SPAN SEISMIC SAFETY PROJECT
SELF-ANCHORED SUSPENSION BRIDGE
(SUPERSTRUCTURE & TOWER)

TYPICAL GIRDER DETAILS NO. 3

Rev. Date: 5-18-98

ORIGINAL SCALE IN MILLIMETERS FOR REDUCED PLANS 0 10 20 30 40 50 60 70 80 90 100

CU 04
EA 0120F1

DISREGARD PRINTS BEARING EARLIER REVISION DATES

REVISION DATES (PRELIMINARY STAGE ONLY) 05/13/99 09/02/99 05/31/01 03/08/02 07/01/02 12/19/02

SHEET 210R1 OF

FILE => I:\bb\04-012001\sas\contract plans and cco\cco\cco#122\1-original 07-31-09\dgn\agdkd02.dgn

USERNAME => dwinrow DATE PLOTTED => 03 AUG 2009 TIME PLOTTED => 15:07:41

100% PS&E

DIST.	COUNTY	ROUTE	KILOMETER POST TOTAL PROJECT	SHEET NO.	TOTAL SHEETS
04	SF	80	13.2/13.9	629R3	1204

George Baker
REGISTERED ENGINEER - CIVIL
12-6-04
PLANS APPROVAL DATE

REGISTERED PROFESSIONAL ENGINEER George S. Baker No. C57112 Exp. 12/31/07 CIVIL STATE OF CALIFORNIA

The State of California or its officers or agents shall not be responsible for the accuracy or completeness of electronic copies of this plan sheet.

T.Y. LIN / MOFFATT & NICHOL
825 BATTERY STREET
SAN FRANCISCO, CA 94111

Caltrans now has a web site! To get to the web site, go to: http://www.dot.ca.gov

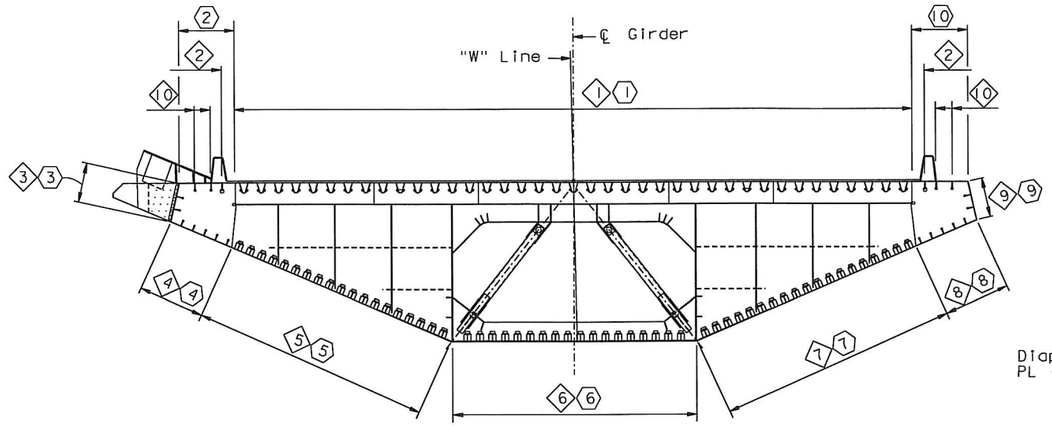

("W" LINE SECTION TYPE 1A SHOWN)

SECTION AT FLOORBEAM

1:100

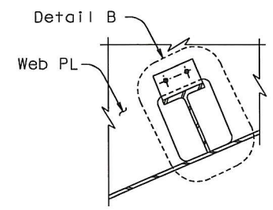

WT TYPE AT CROSSBEAM

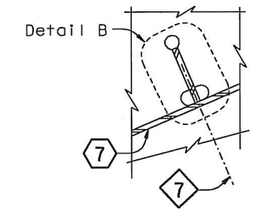

PLATE TYPE AT CROSSBEAM

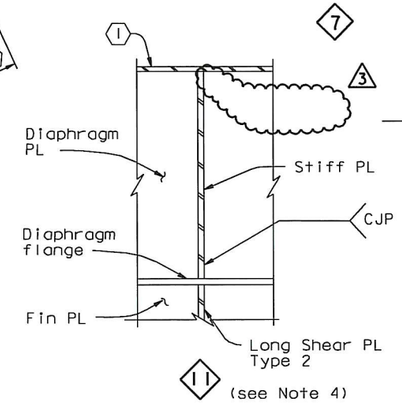

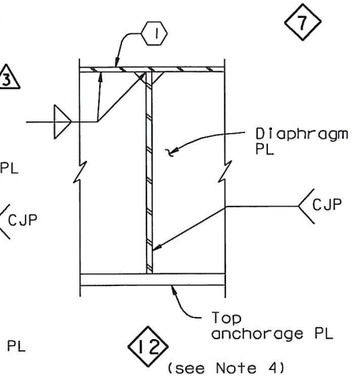

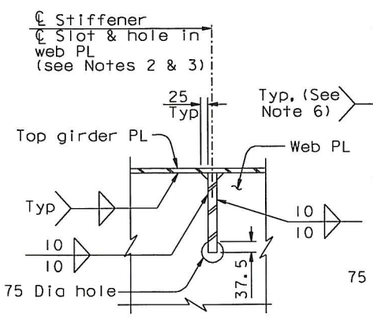

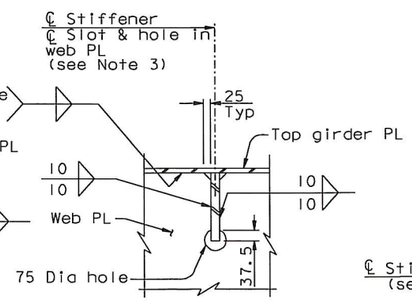

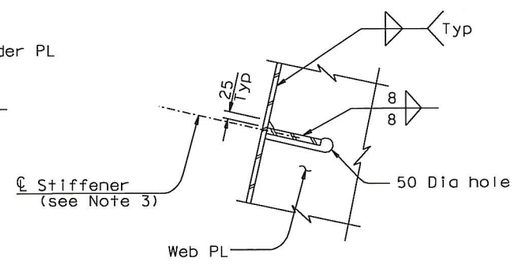

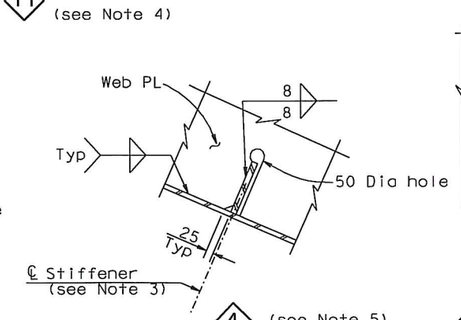

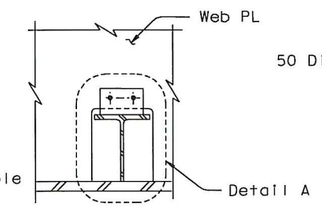

TYPICAL UNO

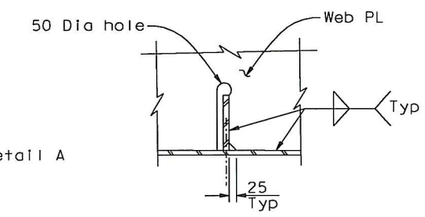

PLATE TYPE

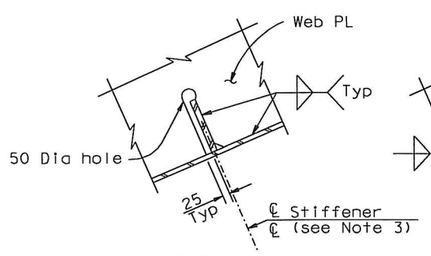

TYPICAL UNO

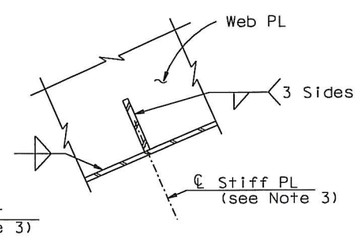

AT CROSSBEAM

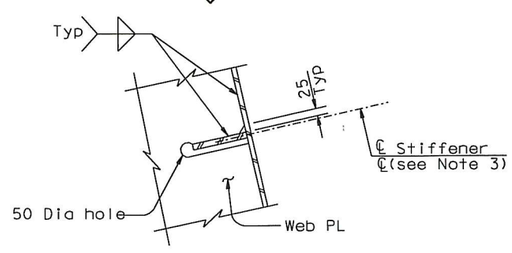

TYPICAL UNO

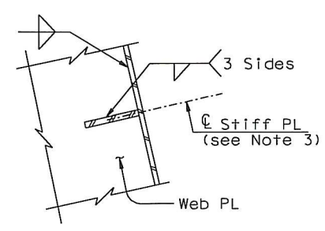

AT CROSSBEAM

STIFFENER DETAILS AT FLOORBEAM (see Note 3)

1:10

NOTES:

1. For Details A and B, see "Typical Girder Details No. 6" sheet.
2. For details at PP117 to PP121, see "Girder at East Transition Details No. 1" and "Girder At Pier E2 No. 9" sheets.
3. All typical girder stiffeners are continuous through floorbeam web except for 8 and 9 at crossbeam, and 1 typically, and unless otherwise specified in the plans.
4. For locations of stiffener types 1 thru 18, see "Girder at East Transition" sheets.
5. Typical details for 3 and 4 shown. For details at suspender location, see "Typical Girder Details No. 6" sheet.
6. For welds at suspender brackets see "Suspender Bracket Details No. 1" sheet.

Daniel J. Turner
REGISTERED PROFESSIONAL ENGINEER Daniel J. Turner No. C 65033 Exp. 06/30/11 CIVIL STATE OF CALIFORNIA

FOR REVISION 2 & 3 ONLY

CONTRACT CHANGE ORDER NO. 122
SHEET 3 OF 9

REQUESTS FOR INFORMATION NOT ADDRESSED IN THIS CCO REMAIN IN FORCE

MARK	DATE	DESCRIPTIONS	BY	CH'D	CCO#
3	07/31/09	LONGITUDINAL SHEAR PLATE	GB	DT	122
2	02/20/09	SUSPENDER BRACKETS	GB	DT	104
1	01/26/06	ADD STIFFENER TYPES 13 THRU 18	GB	NV	22

REVISIONS

R. Valizadeh/V. Toan/Y.L./W.L./F.C.
DESIGN OVERSIGHT
SIGN OFF DATE 07/31/09

Rev. Date: 5-18-98

DESIGN	BY G. Baker	CHECKED P. Ritchie	
DETAILS	BY S. Camo	CHECKED T. McMeans	
QUANTITIES	BY G. Baker	CHECKED M. Roberts	

PREPARED FOR THE STATE OF CALIFORNIA DEPARTMENT OF TRANSPORTATION

ALL DIMENSIONS ARE IN MILLIMETERS UNLESS OTHERWISE SHOWN

R. Manzanarez
PROJECT ENGINEER

BRIDGE NO. 34-0006L/R
KILOMETER POST 13.2/13.9

SAN FRANCISCO OAKLAND BAY BRIDGE
EAST SPAN SEISMIC SAFETY PROJECT
SELF-ANCHORED SUSPENSION BRIDGE
(SUPERSTRUCTURE & TOWER)

TYPICAL GIRDER DETAILS NO. 5

ORIGINAL SCALE IN MILLIMETERS FOR REDUCED PLANS 0 10 20 30 40 50 60 70 80 90 100

CU 04
EA 0120F1

DISREGARD PRINTS BEARING EARLIER REVISION DATES

REVISION DATES (PRELIMINARY STAGE ONLY): 01/15/99 05/05/99 08/02/99 05/31/01 01/08/02 07/08/02 12/18/02 11/13/05

SHEET 212R3 OF

FILE => I:\bb\04-012001\sas\contract plans and cco\cco#122\1-original 07-31-09\dgn\agdkd03a.dgn

100% PS&E

USERNAME => dwithrow DATE PLOTTED => 03 AUG 2009 TIME PLOTTED => 15:08:30

DIST.	COUNTY	ROUTE	KILOMETER POST TOTAL PROJECT	SHEET NO.	TOTAL SHEETS
04	SF	80	13.2/13.9	631R2	1204

Caltrans now has a web site! To get to the web site, go to: http://www.dot.ca.gov

Caltrans Metric

George Baker
REGISTERED ENGINEER - CIVIL
12-6-04
PLANS APPROVAL DATE

REGISTERED PROFESSIONAL ENGINEER George S. Baker No. C57112 Exp. 12/31/05 CIVIL STATE OF CALIFORNIA

The State of California or its officers or agents shall not be responsible for the accuracy or completeness of electronic copies of this plan sheet.

T.Y. LIN / MOFFATT & NICHOL
825 BATTERY STREET
SAN FRANCISCO, CA 94111

OPENING LOCATION TABLE

SHEAR PLATE TYPE	WORKING LINE	PANEL POINT (see Note 5)
2	E3, W3	8.5 (East), 9.5, 10.5, 11.5, 12.5, 13.5, 112.5, 113.5, 114.5
2	E4, W4	8.5 (East), 9.5, 10.5, 11.5, 12.5, 13.5, 112.5, 113.5, 114.5

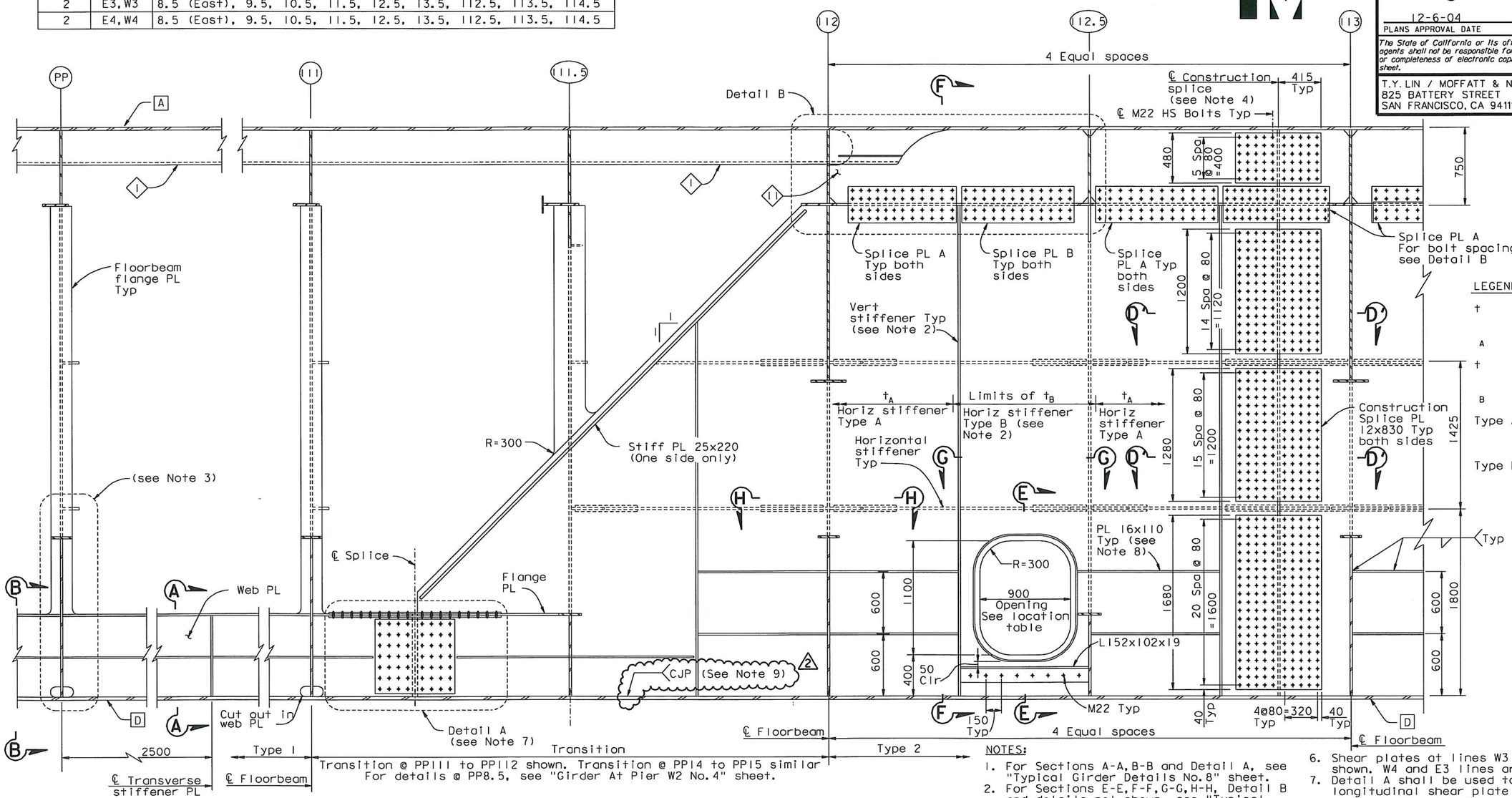

Transition @ PP111 to PP112 shown. Transition @ PP14 to PP15 similar
For details @ PP8.5, see "Girder At Pier W2 No. 4" sheet.

LONGITUDINAL SHEAR PLATE ELEVATION

1:20

LEGEND:

t A	Typical thickness of longitudinal shear plate type 2 (see Notes 2 and 5)
t B	Thickness of long shear plate type 2 strip with opening (see Notes 2 and 5)
Type A	Typical horizontal stiffener size (see Note 5)
Type B	Horizontal stiffener in strip with opening (see Note 5)

NOTES:

1. For Sections A-A, B-B and Detail A, see "Typical Girder Details No. 8" sheet.
2. For Sections E-E, F-F, G-G, H-H, Detail B and details not shown, see "Typical Girder Details No. 9" sheet.
3. For floorbeam details, see "Typical Floorbeam Details" sheets.
4. For location of girder splice, see "Girder Framing Plan" sheets.
5. For plate sizes and openings in east transition, see "Girder at East Transition No. 9" sheet.
6. Shear plates at lines W3 and E4 shown. W4 and E3 lines are similar.
7. Detail A shall be used to splice the longitudinal shear plate Type 1 at box girder splice locations.
8. Lower panel stiffeners shall be placed as shown in Longitudinal shear plate along E3, E4, W3 and W4 lines from PP111.75 to the E2 floorbeam, and from the E2 floorbeam to PP120. Stiffeners shall also be placed along E4 and W4 lines from PP120 to 127. For details at the E2 floorbeam, see "Girder at Pier E2 No. 2" sheet.

2 9. The Longitudinal Shear Plate to Girder Face "D" weld shall be a CJP from the CL Splice near PP111 to PP128.7.

ALL DIMENSIONS ARE IN MILLIMETERS UNLESS OTHERWISE SHOWN

Daniel J. Turner
REGISTERED PROFESSIONAL ENGINEER Daniel J. Turner No. C 65033 Exp. 06/30/11 CIVIL STATE OF CALIFORNIA

FOR REVISIONS ONLY

CONTRACT CHANGE ORDER NO. 122
SHEET 4 OF 9

REQUESTS FOR INFORMATION NOT ADDRESSED IN THIS CCO REMAIN IN FORCE

MARK	DATE	DESCRIPTIONS	BY	CH'D	CCO#
2	07/31/09	LONGITUDINAL SHEAR PLATE	DT	GB	122
1	07/30/07	HINGE A REACTION-SHEAR PLATES	DT	GB	50

REVISIONS

R. Valizadeh/V. Toan/Y.L./W.L./F.C.
DESIGN OVERSIGHT
Roya Valizadeh / Vong P. Toan / Y. Liu
SIGN OFF DATE 07/31/09

DESIGN	BY G. Baker	CHECKED	P. Ritchie
DETAILS	BY S. Camo	CHECKED	T. McMeans
QUANTITIES	BY G. Baker	CHECKED	M. Roberts

PREPARED FOR THE STATE OF CALIFORNIA DEPARTMENT OF TRANSPORTATION

R. Manzanarez
PROJECT ENGINEER

BRIDGE NO. 34-0006L/R
KILOMETER POST 13.2/13.9

SAN FRANCISCO OAKLAND BAY BRIDGE
EAST SPAN SEISMIC SAFETY PROJECT
SELF-ANCHORED SUSPENSION BRIDGE
(SUPERSTRUCTURE & TOWER)

TYPICAL GIRDER DETAILS NO. 7

Rev. Date: 5-18-98

ORIGINAL SCALE IN MILLIMETERS FOR REDUCED PLANS 0 10 20 30 40 50 60 70 80 90 100

CU 04
EA 0120F1

DISREGARD PRINTS BEARING EARLIER REVISION DATES

REVISION DATES (PRELIMINARY STAGE ONLY) 01/15/99 05/15/99 09/02/99 05/24/01 04/08/02 07/01/02 12/19/02

SHEET 214R2 OF

FILE => I:\bb\04-0120F1\sas\contract plans and cco\cco\cco#122\1-original 07-31-09\dgn\agdkd04.dgn

USERNAME => dwinrow DATE PLOTTED => 03 AUG 2009 TIME PLOTTED => 15:09:24

100% PS&E

DIST.	COUNTY	ROUTE	KILOMETER POST TOTAL PROJECT	SHEET NO.	TOTAL SHEETS
04	SF	80	13.2/13.9	633R2	1204

Caltrans Metric

George Baker
REGISTERED ENGINEER - CIVIL
12-6-04
PLANS APPROVAL DATE

REGISTERED PROFESSIONAL ENGINEER George S. Baker No. C57112 Exp. 12/31/05 CIVIL STATE OF CALIFORNIA

The State of California or its officers or agents shall not be responsible for the accuracy or completeness of electronic copies of this plan sheet.

T.Y. LIN / MOFFATT & NICHOL
825 BATTERY STREET
SAN FRANCISCO, CA 94111

Caltrans now has a web site! To get to the web site, go to: http://www.dot.ca.gov

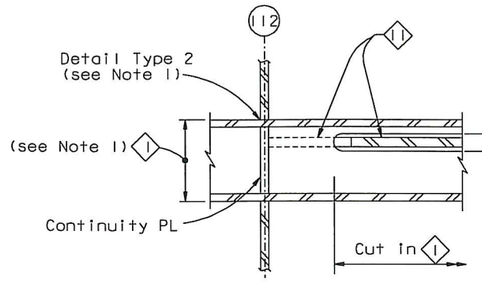

SECTION K-K
1:5

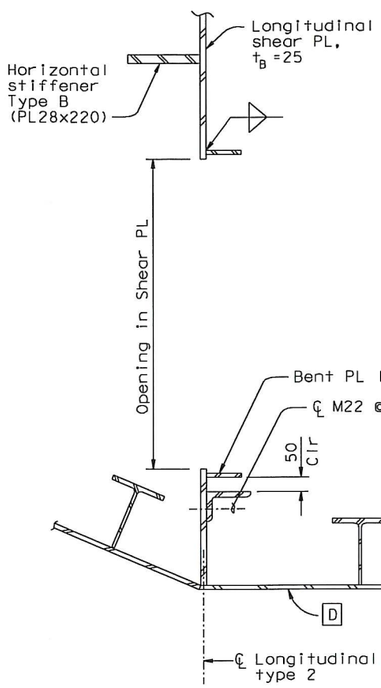

SECTION E-E
1:10

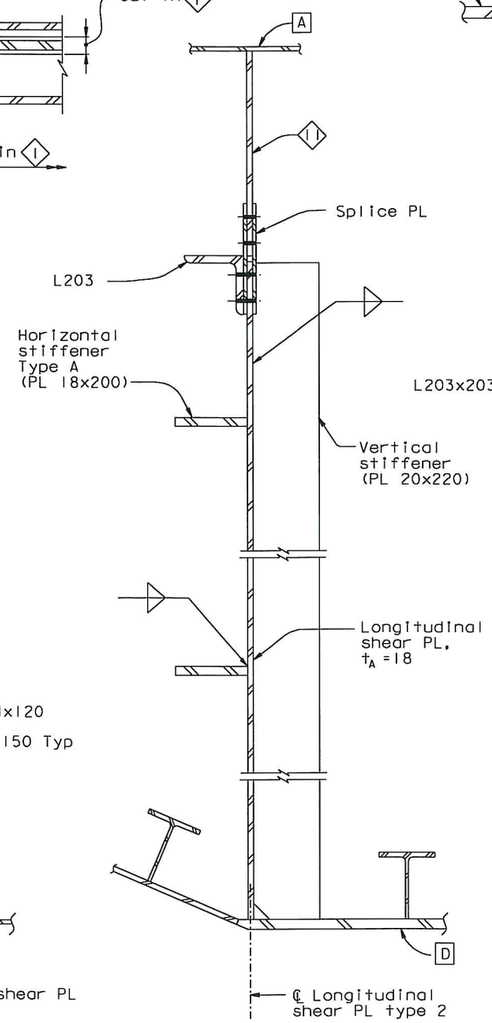

SECTION F-F
1:10

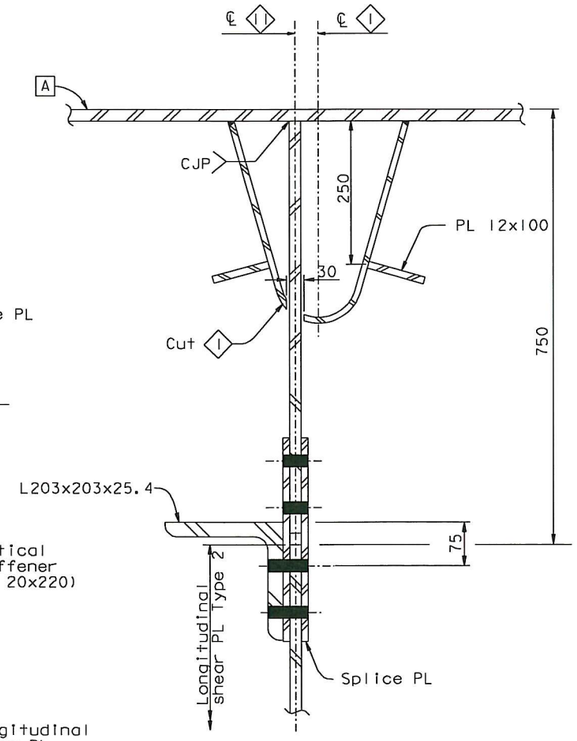

SECTION J-J
1:5

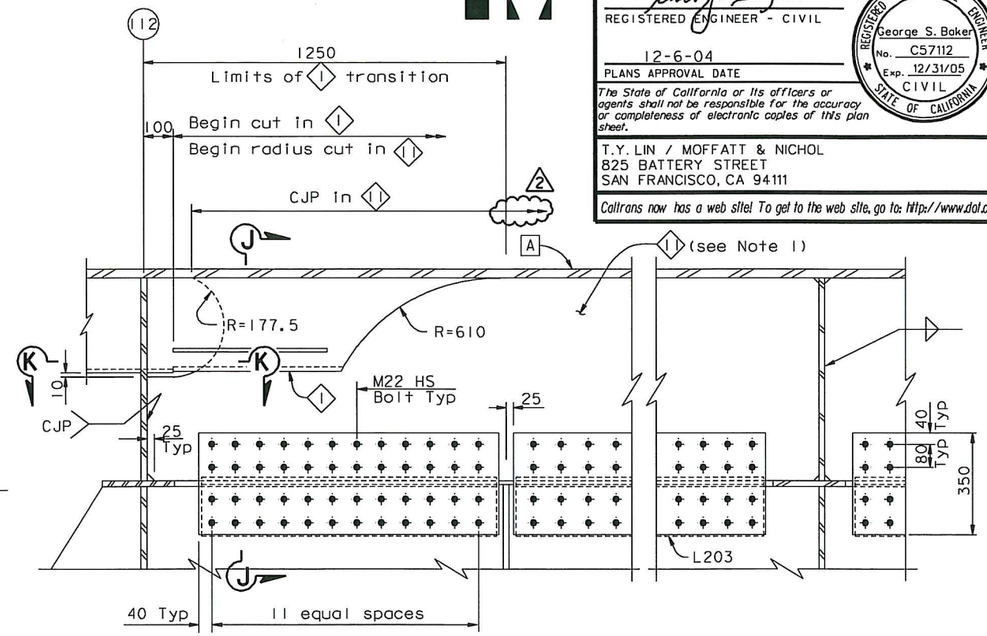

TRANSITION @ PP112 SHOWN
PP14 SIMILAR

DETAIL B
1:10

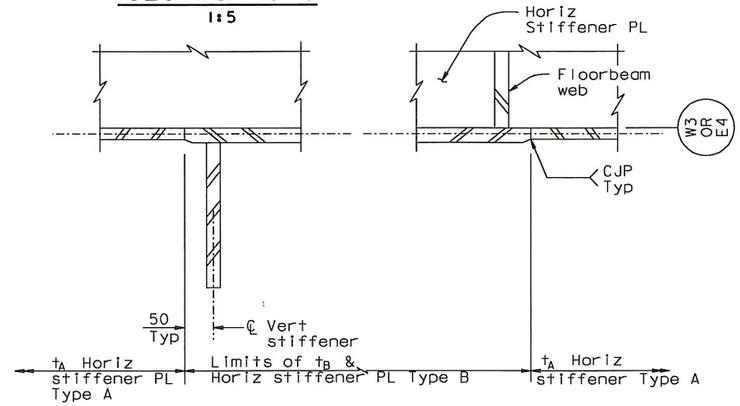

SECTION G-G
1:5

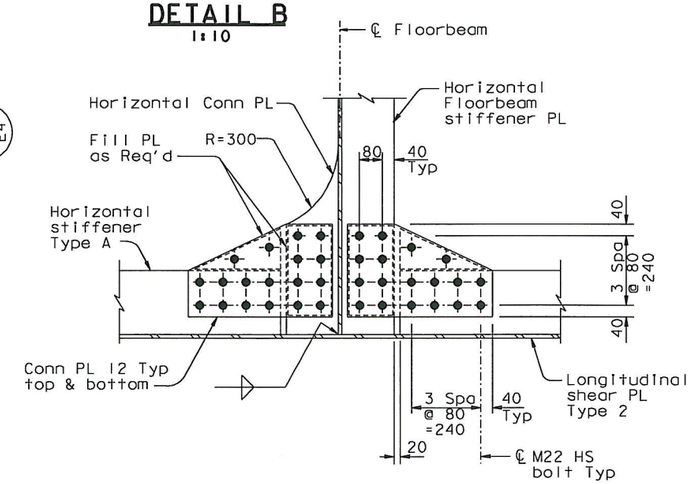

HORIZONTAL CONNECTION PLATE DETAIL

SECTION H-H
1:10

NOTES:

1. For details of ⟨1⟩ and ⟨11⟩, see "Typical Girder Details No. 3" and "Typical Girder Details No. 4" sheets.

REGISTERED PROFESSIONAL ENGINEER Daniel J. Turner No. C 65033 Exp. 06/30/11 CIVIL STATE OF CALIFORNIA

FOR REVISIONS ONLY

CONTRACT CHANGE ORDER NO. 122
SHEET 5 OF 9

REQUESTS FOR INFORMATION NOT ADDRESSED IN THIS CCO REMAIN IN FORCE

ALL DIMENSIONS ARE IN MILLIMETERS UNLESS OTHERWISE SHOWN

MARK	DATE	DESCRIPTIONS	BY	CH'D	CCO#
2	07/31/09	LONGITUDINAL SHEAR PLATE	DT	GB	122
1	07/30/07	HINGE A REACTION-SHEAR PLATES	DT	GB	50

REVISIONS

R. Valizadeh/V. Toan/Y.L./W.L./F.C.
DESIGN OVERSIGHT
SIGN OFF DATE 07/31/09

DESIGN	BY G. Baker	CHECKED P. Ritchie	
DETAILS	BY S. Camo	CHECKED T. McMeans	
QUANTITIES	BY G. Baker	CHECKED M. Roberts	

PREPARED FOR THE STATE OF CALIFORNIA DEPARTMENT OF TRANSPORTATION

R. Manzanarez
PROJECT ENGINEER

BRIDGE NO. 34-0006L/R
KILOMETER POST 13.2/13.9

SAN FRANCISCO OAKLAND BAY BRIDGE
EAST SPAN SEISMIC SAFETY PROJECT
SELF-ANCHORED SUSPENSION BRIDGE
(SUPERSTRUCTURE & TOWER)

TYPICAL GIRDER DETAILS NO. 9

Rev. Date: 5-18-98

ORIGINAL SCALE IN MILLIMETERS FOR REDUCED PLANS 0 10 20 30 40 50 60 70 80 90 100

CU 04
EA 0120F1

DISREGARD PRINTS BEARING EARLIER REVISION DATES

REVISION DATES (PRELIMINARY STAGE ONLY) 05/27/01 06/06/02 07/07/02 12/19/02

SHEET 216R2 OF

FILE => I:\bb\04-01200I\sas\contract plans and cco\cco\cco#122\I-original 07-31-09\dgn\agdkd05a.dgn

100 % PS&E

USERNAME => dwinrow DATE PLOTTED => 03 AUG 2009 TIME PLOTTED => 15:10:13

DIST.	COUNTY	ROUTE	KILOMETER POST TOTAL PROJECT	SHEET NO.	TOTAL SHEETS
04	SF	80	13.2/13.9	675R2	1204

George Baker
REGISTERED ENGINEER - CIVIL
12-6-04
PLANS APPROVAL DATE

REGISTERED PROFESSIONAL ENGINEER George S. Baker No. C57112 Exp. 12/31/05 CIVIL STATE OF CALIFORNIA

The State of California or its officers or agents shall not be responsible for the accuracy or completeness of electronic copies of this plan sheet.

T.Y. LIN / MOFFATT & NICHOL
825 BATTERY STREET
SAN FRANCISCO, CA 94111

Caltrans now has a web site! To get to the web site, go to: http://www.dot.ca.gov

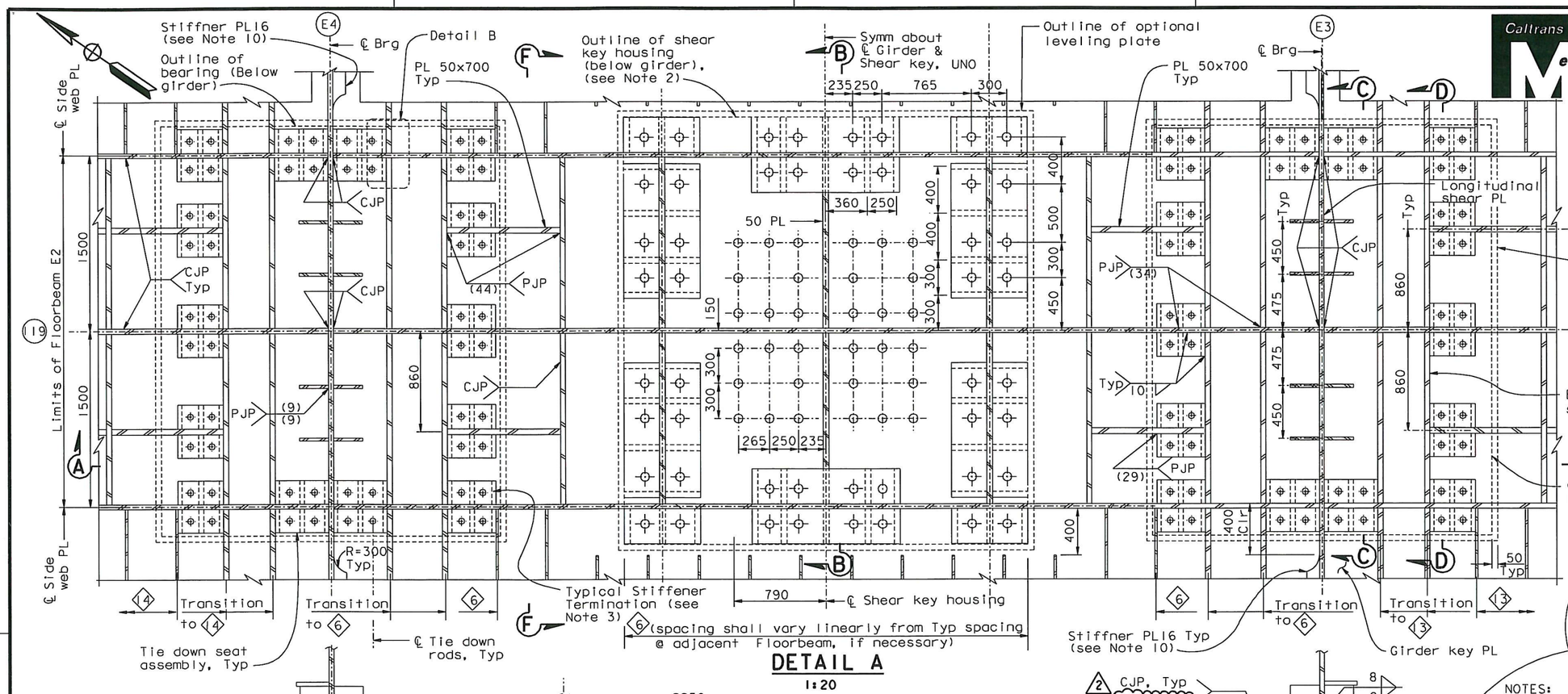

DETAIL A
1:20

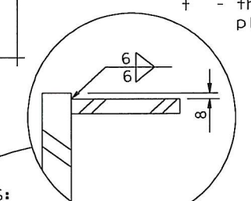

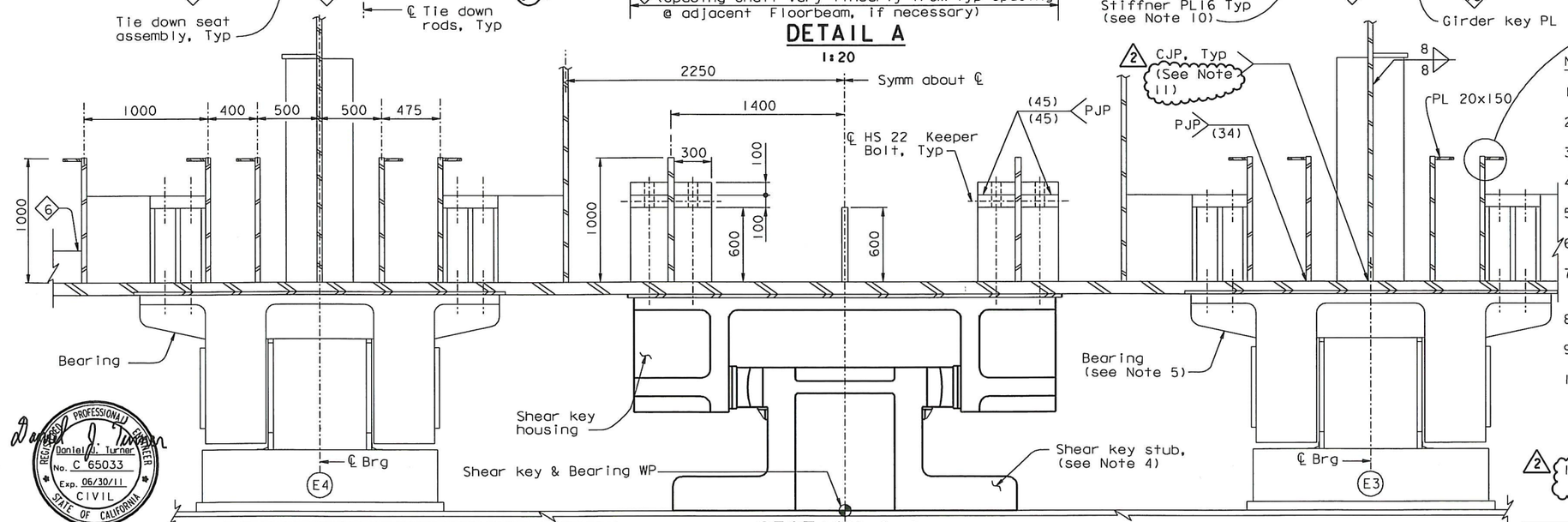

SECTION A-A
1:20

NOTES:

1. For girder plate thickness, see "Typical Girder Details No.1" sheet.
2. For details of shear key housing, see "Pier E2 Shear Key" sheets.
3. For typical girder stiffener termination, see "Typical Girder Details No.16" sheet.
4. For details of shear key, see "Pier E2 Shear Key Details" sheets.
5. For details of bearing, see "Pier E2 Bearing Details" sheets.
6. For Section F-F, see "Girder At Pier E2 No.6" sheet.
7. For bolt and rod locations, see "Pier E2 Shear Key Details" and "Pier E2 Bearing Details" sheets.
8. For Pier E2 bearing and shear key location, see "Pier E2 Bearing And Shear Key Layout" sheet.
9. For Section B-B, C-C, D-D and detail B, see "Girder At Pier E2 No.3" sheet.
10. For termination of stiffener plate 16 at E2 floorbeam, see Detail G on "Typical Floorbeam Details No.4" sheet. For other stiffener details see "Typical Girder Details No.7" sheet.
11. For extent of CJP weld, see Note 12 on "Typical Girder Details No.7" sheet.

LEGEND

- 75 Dia anchor bolt (A354 Gr. BD)
- 64 Dia anchor bolt (A354 Gr. BD)
- 29 Dia anchor bolt (A354 Gr. BD)
- 50 Dia anchor bolt (A354 Gr. BD)
- † - thickness of terminating plate in T-joint

Daniel J. Turner
REGISTERED PROFESSIONAL ENGINEER Daniel J. Turner No. C 65033 Exp. 06/30/11 CIVIL STATE OF CALIFORNIA
FOR REVISIONS ONLY

REQUESTS FOR INFORMATION NOT ADDRESSED IN THIS CCO REMAIN IN FORCE

MARK	DATE	DESCRIPTIONS	BY	CH'D	CCO#
2	07/31/09	LONGITUDINAL SHEAR PLATE	DT	GB	122
1	07/30/07	HINGE A REACTION-SHEAR PLATES	DT	GB	50

REVISIONS

CONTRACT CHANGE ORDER NO. 122
SHEET 6 OF 9

ALL DIMENSIONS ARE IN MILLIMETERS UNLESS OTHERWISE SHOWN

	BY	CHECKED
DESIGN	G. Baker	P. Ritchie
DETAILS	C. Mauch	T. McMeans
QUANTITIES	D. Turner	M. Roberts

PREPARED FOR THE STATE OF CALIFORNIA DEPARTMENT OF TRANSPORTATION

R. Manzanarez
PROJECT ENGINEER

BRIDGE NO. 34-0006L/R
KILOMETER POST 13.2/13.9

SAN FRANCISCO OAKLAND BAY BRIDGE
EAST SPAN SEISMIC SAFETY PROJECT
SELF-ANCHORED SUSPENSION BRIDGE (SUPPERSTRUCTURE & TOWER)

GIRDER AT PIER E2 NO.2

R. Vallizadeh/V. Toan/Y.L./W.L./F.C.
DESIGN OVERSIGHT
Roya Vallizadeh / Vong Toan / Y. Liu
SIGN OFF DATE 07/31/09

Rev. Date: 5-18-98

ORIGINAL SCALE IN MILLIMETERS FOR REDUCED PLANS 0 10 20 30 40 50 60 70 80 90 100

CU 04
EA 0120F1

DISREGARD PRINTS BEARING EARLIER REVISION DATES

REVISION DATES (PRELIMINARY STAGE ONLY): 05/29/99 08/08/99 05/24/01 06/06/02 07/30/02 12/18/02 10/25/05 11/15/05 12/07/05

SHEET 258R2 OF

FILE => I:\bb\04-012001\sas\contract plans and cco\cco\cco#122\1-original 07-31-09\dgn\aggdd07.dgn

USERNAME => dwinrow DATE PLOTTED => 03 AUG 2009 TIME PLOTTED => 15:11:32

100 % PS&E

Caltrans now has a web site! To get to the web site, go to: http://www.dot.ca.gov

Caltrans Metric

DIST.	COUNTY	ROUTE	KILOMETER POST TOTAL PROJECT	SHEET NO.	TOTAL SHEETS
04	SF	80	13.2/13.9	697R2	1204

George Baker
REGISTERED ENGINEER - CIVIL
12-6-04
PLANS APPROVAL DATE

REGISTERED PROFESSIONAL ENGINEER George S. Baker No. C 57112 Exp. 12/31/05 CIVIL STATE OF CALIFORNIA

The State of California or its officers or agents shall not be responsible for the accuracy or completeness of electronic copies of this plan sheet.

T.Y. LIN / MOFFATT & NICHOL
825 BATTERY STREET
SAN FRANCISCO, CA 94111

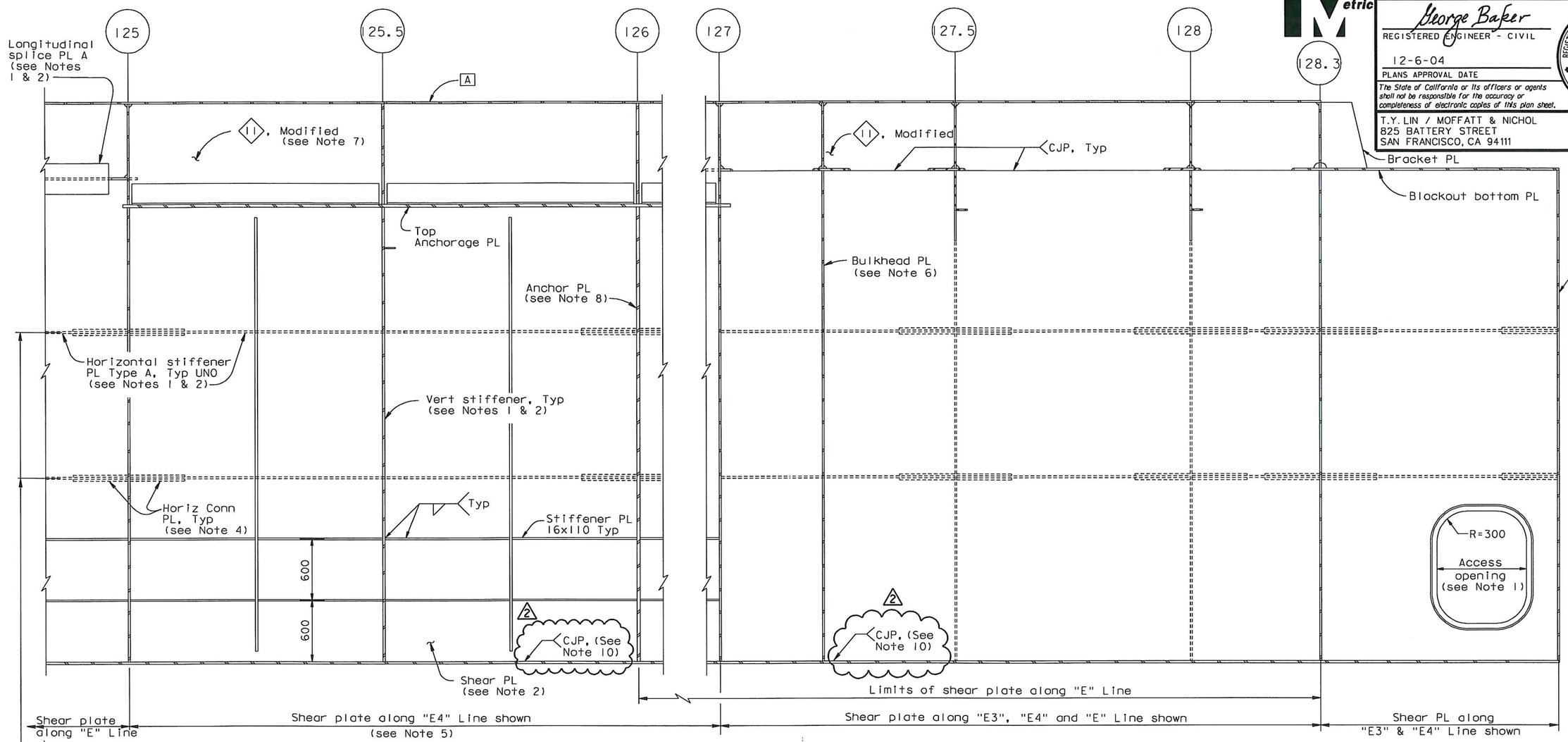

ELEVATION
LONGITUDINAL SHEAR PLATE TYPE 2
SECTION B-B

1:20
("E" Line girder shown, "W" Line girder similar)

NOTES:

1. Longitudinal shear plate type 2 from PP115 to PP125 is similar to longitudinal shear plate type 2 in typical girder section type 2. For details not shown, see "Typical Girder Details No. 7" sheet.
2. For longitudinal shear plate dimension table and access opening locations from PP115 to hinge A, see "Girder At East Transition No. 9" sheet.
3. For floorbeam details not shown, see "Floorbeam At East Transition" sheets.
4. For horizontal connection plate detail, see "Typical Girder Details No. 9" sheet.
5. For detail of longitudinal shear plate type 2 along "E3" Line from PP125 to PP127, see "Girder At East Transition No. 6" sheet.
6. For details of bulkhead plate, see "Floorbeam At Transition No. 8" sheet.
7. For details of 11, Modified not shown see 12 on "Girder At East Transition No. 17" sheet.
8. For details of anchor PL, see "East Cable Anchorage "E" Line Layout" and "East Cable Anchorage "W" Line Layout" sheets.
9. For details of end girder PL, see "Floorbeam At East Transition No. 10" sheet.
10. The Longitudinal Shear Plate to Girder Face "D" weld shall be a CJP from the CL Splice near PP111 to PP128.7.

Daniel J. Turner
REGISTERED PROFESSIONAL ENGINEER Daniel J. Turner No. C 65033 Exp. 06/30/11 CIVIL STATE OF CALIFORNIA

FOR REVISIONS ONLY

CONTRACT CHANGE ORDER NO. 122
SHEET 7 OF 9

REQUESTS FOR INFORMATION NOT ADDRESSED IN THIS CCO REMAIN IN FORCE

ALL DIMENSIONS ARE IN MILLIMETERS UNLESS OTHERWISE SHOWN

100 % PS&E

R. Valizadeh/V. Toan/Y.L./W.L./F.C.
DESIGN OVERSIGHT
Roger Valizadeh / Vona Toan / Y. Liu
SIGN OFF DATE 07/31/09

MARK	DATE	DESCRIPTIONS	BY	CH'D	CCO#
2	07/31/09	LONGITUDINAL SHEAR PLATE	DT	GB	122
1	07/30/07	HINGE A REACTION-SHEAR PLATES	DT	GB	50

REVISIONS

	BY	CHECKED
DESIGN	G. Baker	P. Ritchie
DETAILS	M. Gulyas	T. McMeans
QUANTITIES	G. Baker	M. Roberts

PREPARED FOR THE STATE OF CALIFORNIA DEPARTMENT OF TRANSPORTATION

R. Manzanarez
PROJECT ENGINEER

BRIDGE NO. 34-0006L/R
KILOMETER POST 13.2/13.9

SAN FRANCISCO OAKLAND BAY BRIDGE
EAST SPAN SEISMIC SAFETY PROJECT
SELF-ANCHORED SUSPENSION BRIDGE
(SUPERSTRUCTURE & TOWER)

GIRDER AT EAST TRANSITION NO. 15

Rev. Date: 5-18-98

ORIGINAL SCALE IN MILLIMETERS FOR REDUCED PLANS 0 10 20 30 40 50 60 70 80 90 100

CU 04
EA 0120F1

DISREGARD PRINTS BEARING EARLIER REVISION DATES

REVISION DATES (PRELIMINARY STAGE ONLY) 05/15/99 08/02/99 05/31/01 04/08/02 07/01/02 12/19/02 11/13/05

SHEET 280R2 OF

FILE => I:\bb\04-012001\sas\contract plans and cco\cco\cco#122\1-original 07-31-09\dgn\agand17.dgn

USERNAME => dwinrow DATE PLOTTED => 03 AUG 2009 TIME PLOTTED => 15:06:52

DIST.	COUNTY	ROUTE	KILOMETER POST TOTAL PROJECT	SHEET NO.	TOTAL SHEETS
04	SF	80	13.2/13.9	698R1	1204

George Baker
REGISTERED ENGINEER - CIVIL
12-6-04
PLANS APPROVAL DATE

REGISTERED PROFESSIONAL ENGINEER George S. Baker No. C57112 Exp. 12/31/05 CIVIL STATE OF CALIFORNIA

The State of California or its officers or agents shall not be responsible for the accuracy or completeness of electronic copies of this plan sheet.

T.Y. LIN / MOFFATT & NICHOL
825 BATTERY STREET
SAN FRANCISCO, CA 94111

Caltrans now has a web site! To get to the web site, go to: http://www.dot.ca.gov

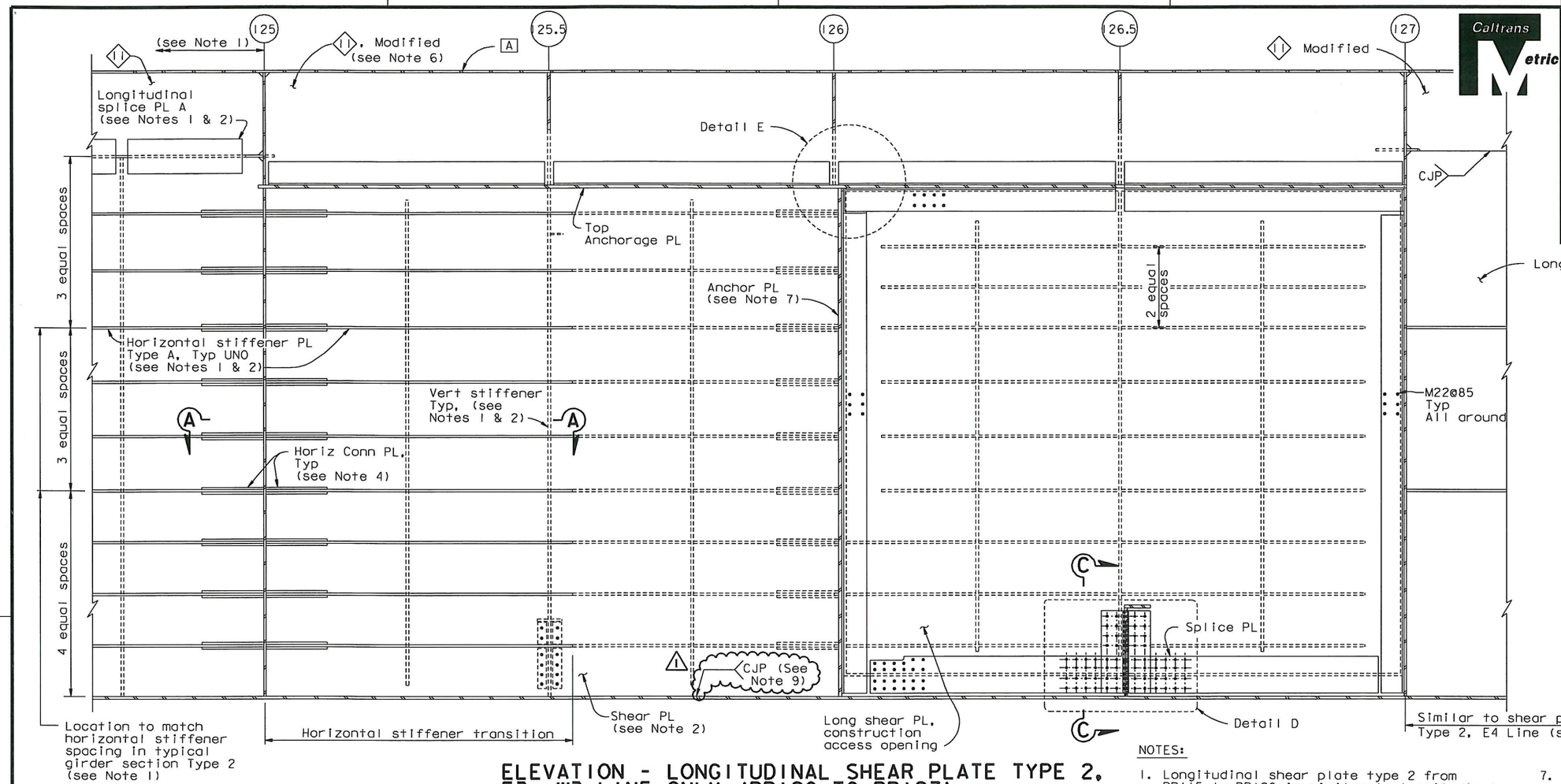

ELEVATION - LONGITUDINAL SHEAR PLATE TYPE 2, E3, W3 LINE ONLY (PP120 TO PP127)

SECTION C-C

1:20
(E3 Line shown, W3 Line similar)

NOTES:

1. Longitudinal shear plate type 2 from PP115 to PP120 is similar to longitudinal shear plate type 2 in typical girder section type 2. For details not shown, see "Typical Girder Details No. 7" sheet.
2. For longitudinal shear plate dimension table and access opening locations from PP115 to hinge A, see "Girder At East Transition No. 9" sheet.
3. For floorbeam details not shown, see "Floorbeam At East Transition" sheets.
4. For horizontal connection plate detail, see "Typical Girder Details No. 9" sheet.
5. For detail of longitudinal shear plate type 2 from PP127 to PP128.7, see "Girder At East Transition No. 15" sheet.
6. For details of 11, Modified not shown see 12 on "Girder At East Transition No. 17" sheet.
7. For details of anchor PL, see "East Cable Anchorage "E" Line Layout" and "East Cable Anchorage "W" Line layout" sheets.
8. For Sections A-A, C-C and Details D and E, see "Girder At East Transition Details No. 4" sheet.
9. The Longitudinal Shear Plate to Girder Face "D" weld shall be a CJP from the CL Splice near PP111 to PP128.7.

REGISTERED PROFESSIONAL ENGINEER Daniel J. Turner No. C 65033 Exp. 06/30/11 CIVIL STATE OF CALIFORNIA

FOR REVISIONS ONLY

CONTRACT CHANGE ORDER NO. 122
SHEET 8 OF 9

REQUESTS FOR INFORMATION NOT ADDRESSED IN THIS CCO REMAIN IN FORCE

ALL DIMENSIONS ARE IN MILLIMETERS UNLESS OTHERWISE SHOWN

SAN FRANCISCO OAKLAND BAY BRIDGE
EAST SPAN SEISMIC SAFETY PROJECT
SELF-ANCHORED SUSPENSION BRIDGE
(SUPERSTRUCTURE & TOWER)

GIRDER AT EAST TRANSITION NO. 16

R. Valizadeh/V. Toan/Y.L./W.L./F.C.
DESIGN OVERSIGHT
Roger Valizadeh / Vana Toan / Y. Liu
SIGN OFF DATE 07/31/09

MARK	DATE	DESCRIPTIONS	BY	CH'D	CCO#
1	07/31/09	LONGITUDINAL SHEAR PLATE	DT	GB	122

REVISIONS

	BY	CHECKED
DESIGN	G. Baker	P. Ritchie
DETAILS	M. Gulyas	T. McMeans
QUANTITIES	G. Baker	M. Roberts

PREPARED FOR THE STATE OF CALIFORNIA DEPARTMENT OF TRANSPORTATION

R. Manzanarez
PROJECT ENGINEER

BRIDGE NO. 34-0006L/R
KILOMETER POST 13.2/13.9

Rev. Date: 5-18-98

ORIGINAL SCALE IN MILLIMETERS FOR REDUCED PLANS 0 10 20 30 40 50 60 70 80 90 100

CU 04
EA 0120F1

DISREGARD PRINTS BEARING EARLIER REVISION DATES

REVISION DATES (PRELIMINARY STAGE ONLY) 5/15/99 08/02/99 05/31/01 04/08/02 07/8/02 12/19/02

SHEET 281R1 OF

FILE => L:\BB\04-012001\SAS\Contract Plans and CCO\CCO\CCO#122\1-Original 07-31-09\DGN\agand10.dgn

100 % PS&E

USERNAME => dwinrow DATE PLOTTED => 03 AUG 2009 TIME PLOTTED => 15:03:51

DIST.	COUNTY	ROUTE	KILOMETER POST TOTAL PROJECT	SHEET NO.	TOTAL SHEETS
04	SF	80	13.2/13.9	704R1	1204

Caltrans Metric

George Baker
REGISTERED ENGINEER - CIVIL
12-6-04
PLANS APPROVAL DATE

REGISTERED PROFESSIONAL ENGINEER George S. Baker No. C 57112 Exp. 12/31/05 CIVIL STATE OF CALIFORNIA

The State of California or its officers or agents shall not be responsible for the accuracy or completeness of electronic copies of this plan sheet.

T.Y. LIN / MOFFATT & NICHOL
825 BATTERY STREET
SAN FRANCISCO, CA 94111

Caltrans now has a web site! To get to the web site, go to: http://www.dot.ca.gov

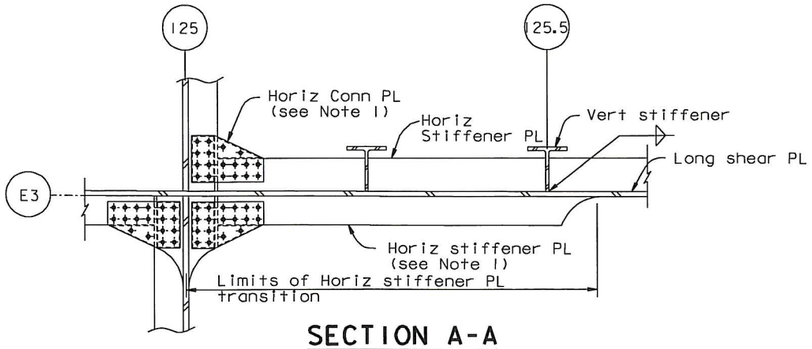

SECTION A-A
1:20

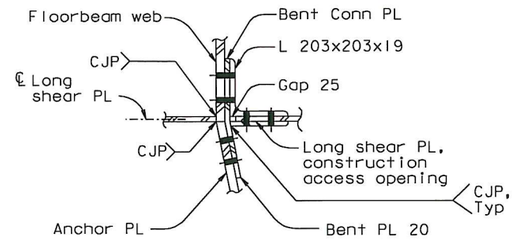

SECTION B-B
1:10

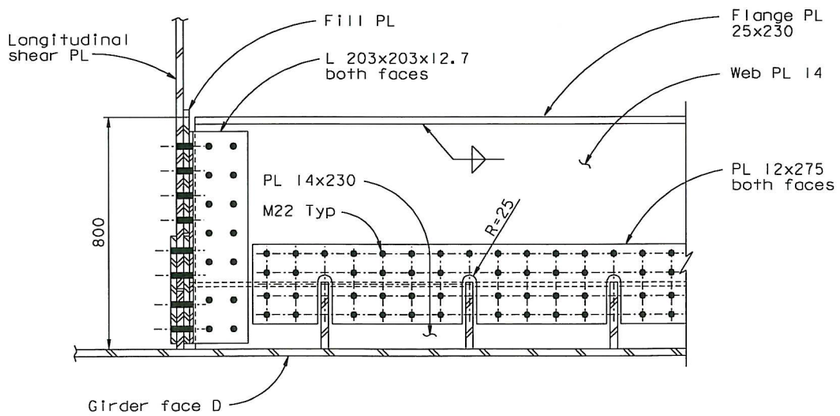

SECTION C-C
1:10

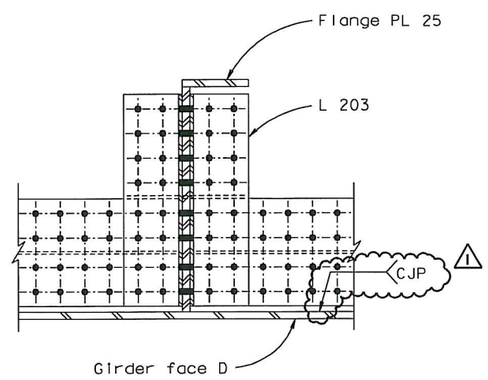

DETAIL D
1:10

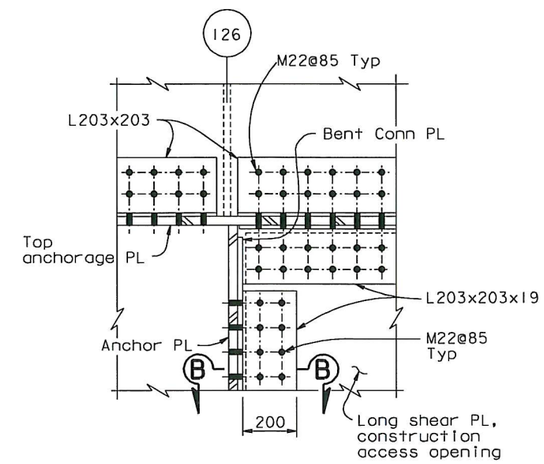

DETAIL E
1:10

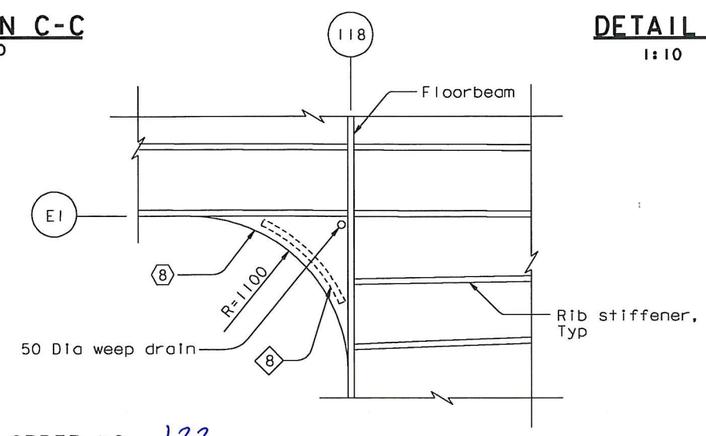

DETAIL F
1:20

NOTES:

1. For horizontal connection plate detail, see "Typical Girder Details No.9" sheet.

Daniel J. Turner
REGISTERED PROFESSIONAL ENGINEER Daniel J. Turner No. C 65033 Exp. 06/30/11 CIVIL STATE OF CALIFORNIA

FOR REVISIONS ONLY

CONTRACT CHANGE ORDER NO. 122
SHEET 9 OF 9

REQUESTS FOR INFORMATION NOT ADDRESSED IN THIS CCO REMAIN IN FORCE

ALL DIMENSIONS ARE IN MILLIMETERS UNLESS OTHERWISE SHOWN

R. Vallizadeh/V. Toan/Y.L./W.L./F.C.
DESIGN OVERSIGHT
SIGN OFF DATE 07/31/09

MARK	DATE	DESCRIPTIONS	BY	CH'D	CCO#
1	07/31/09	LONGITUDINAL SHEAR PLATE	DT	GB	122

REVISIONS

	BY	CHECKED
DESIGN	G. Baker	P. Ritchie
DETAILS	D. Veytsman	T. McMeans
QUANTITIES	G. Baker	M. Roberts

PREPARED FOR THE STATE OF CALIFORNIA DEPARTMENT OF TRANSPORTATION

R. Manzanarez
PROJECT ENGINEER

BRIDGE NO. 34-0006L/R
KILOMETER POST 13.2/13.9

SAN FRANCISCO OAKLAND BAY BRIDGE
EAST SPAN SEISMIC SAFETY PROJECT
SELF-ANCHORED SUSPENSION BRIDGE
(SUPERSTRUCTURE & TOWER)
GIRDER AT EAST TRANSITION DETAILS NO. 4

Rev. Date: 5-18-98

ORIGINAL SCALE IN MILLIMETERS FOR REDUCED PLANS 0 10 20 30 40 50 60 70 80 90 100

CU 04
EA 0120F1

DISREGARD PRINTS BEARING EARLIER REVISION DATES
REVISION DATES (PRELIMINARY STAGE ONLY) 04/08/02 07/01/02 12/19/02

SHEET 287R1 OF

FILE => I:\bb\04-012001\sas\contract plans and cco\cco\cco#122\1-original 07-31-09\dgn\agand15.dgn

100 % PS&E

USERNAME => dwinrow DATE PLOTTED => 03 AUG 2009 TIME PLOTTED => 15:06:20