DIST.	COUNTY	ROUTE	KILOMETER POST TOTAL PROJECT	SHEET NO.	TOTAL SHEETS
04	SF	80	13.2/13.9	855R1	1204

Caltrans Metric

REGISTERED ENGINEER - CIVIL

12-6-04
PLANS APPROVAL DATE

The State of California or its officers or agents shall not be responsible for the accuracy or completeness of electronic copies of this plan sheet.

REGISTERED PROFESSIONAL ENGINEER Marwan N. Nader No. C 054426 Exp. 12/31/11 CIVIL STATE OF CALIFORNIA

T.Y. LIN / MOFFATT & NICHOL
825 BATTERY STREET
SAN FRANCISCO, CA 94111

Caltrans now has a web site! To get to the web site, go to: http://www.dot.ca.gov

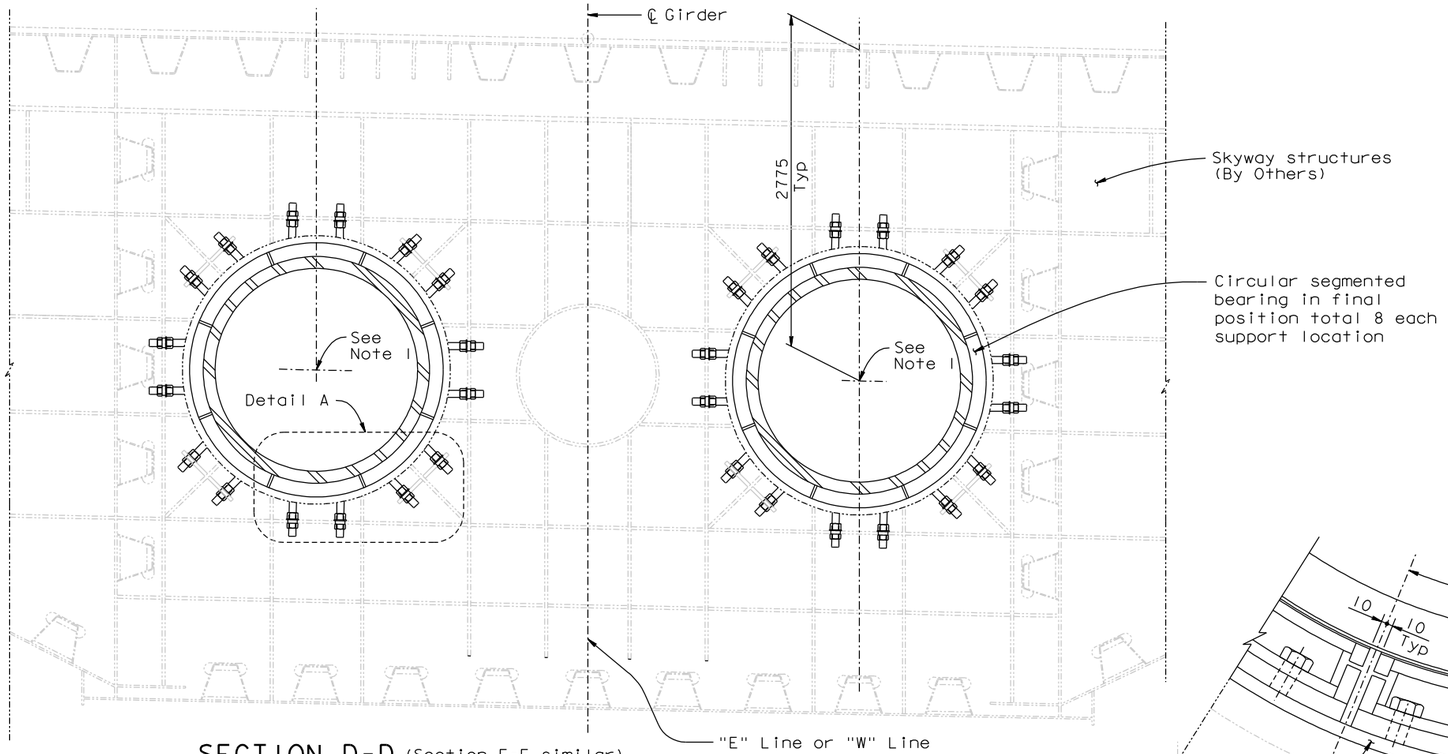

SECTION D-D (Section E-E similar)

1:25

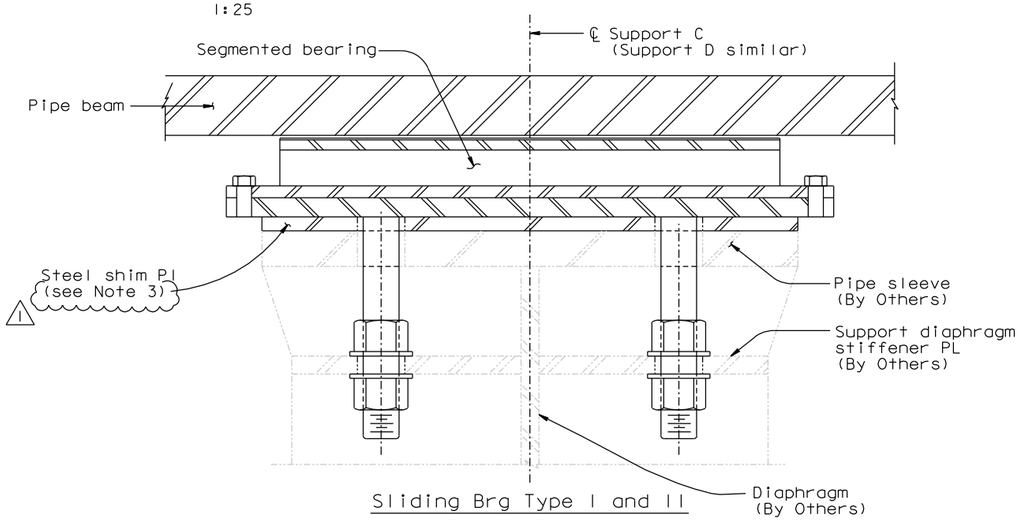

Sliding Brg Type I and II

SECTION A-A

NTS

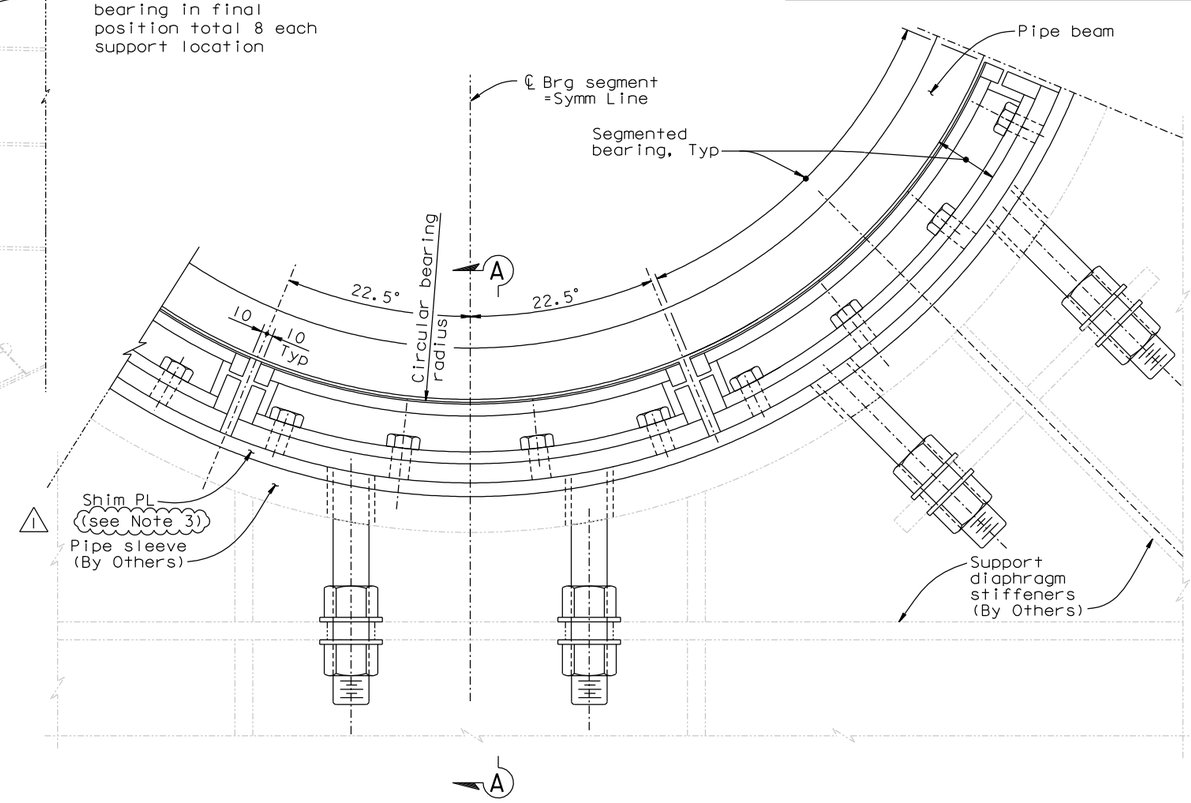

Sliding Brg Type I and II (see Note 2)

DETAIL A

NTS

NOTES:

1. For locations of BCIW, BCOE, BDIW, BDOE, BCOW, BCIE, BDOW and BDIE, see "Hinge A Geometry Layout" sheets.
2. For sliding bearing Types I and II, see "Hinge A Details No.7" sheet.
3. At the Contractor's option, the shim PL may be replaced with high strength non-shrink grout, subject to review and approval of the Engineer. (1)

CONTRACT CHANGE ORDER NO. _____
SHEET ___ OF ___

REQUESTS FOR INFORMATION NOT ADDRESSED IN THIS CCO REMAIN IN FORCE

ALL DIMENSIONS ARE IN MILLIMETERS UNLESS OTHERWISE SHOWN

100% PS&E

MARK	DATE	DESCRIPTIONS	BY	CH'D	CCO#
1	07/30/10	HINGE A MODIFICATIONS	MN	NV	120

REVISIONS

R. Valizadeh/V. Toan/Y.L./W.L./F.C.
DESIGN OVERSIGHT
Roya Valizadeh / Vong Toan / Y. Liu
SIGN OFF DATE 07/30/10

	BY	CHECKED
DESIGN	M. Nader	N. Vo
DETAILS	G. Baker	N. Vo
QUANTITIES	G. Baker	N. Vo

PREPARED FOR THE STATE OF CALIFORNIA DEPARTMENT OF TRANSPORTATION

R. Manzanarez
PROJECT ENGINEER

BRIDGE NO. 34-0006L/R
KILOMETER POST 13.2/13.9

SAN FRANCISCO OAKLAND BAY BRIDGE
EAST SPAN SEISMIC SAFETY PROJECT
SELF-ANCHORED SUSPENSION BRIDGE
(SUPERSTRUCTURE & TOWER)

HINGE A DETAILS NO. 4

Rev. Date: 5-18-98

ORIGINAL SCALE IN MILLIMETERS FOR REDUCED PLANS 0 10 20 30 40 50 60 70 80 90 100

CU 04
EA 0120F1

DISREGARD PRINTS BEARING EARLIER REVISION DATES — REVISION DATES (PRELIMINARY STAGE ONLY) 04/08/02 01/07/02 12/19/02

SHEET 438R1 OF

FILE => I:\bb\04-012001\sas\contract plans and cco\cco\cco#120\2-revsion 07-30-10\dgn\ahhng04.dgn

USERNAME => dwinrow DATE PLOTTED => 30 JUL 2010 TIME PLOTTED => 11:01:51