DIST.	COUNTY	ROUTE	KILOMETER POST TOTAL PROJECT	SHEET NO.	TOTAL SHEETS
04	SF	80	13.2/13.9	854R1	1204

Caltrans Metric

REGISTERED ENGINEER - CIVIL

12-6-04
PLANS APPROVAL DATE

REGISTERED PROFESSIONAL ENGINEER Marwan N. Nader No. C 054426 Exp. 12/31/11 CIVIL STATE OF CALIFORNIA

The State of California or its officers or agents shall not be responsible for the accuracy or completeness of electronic copies of this plan sheet.

T.Y. LIN / MOFFATT & NICHOL
825 BATTERY STREET
SAN FRANCISCO, CA 94111

Caltrans now has a web site! To get to the web site, go to: http://www.dot.ca.gov

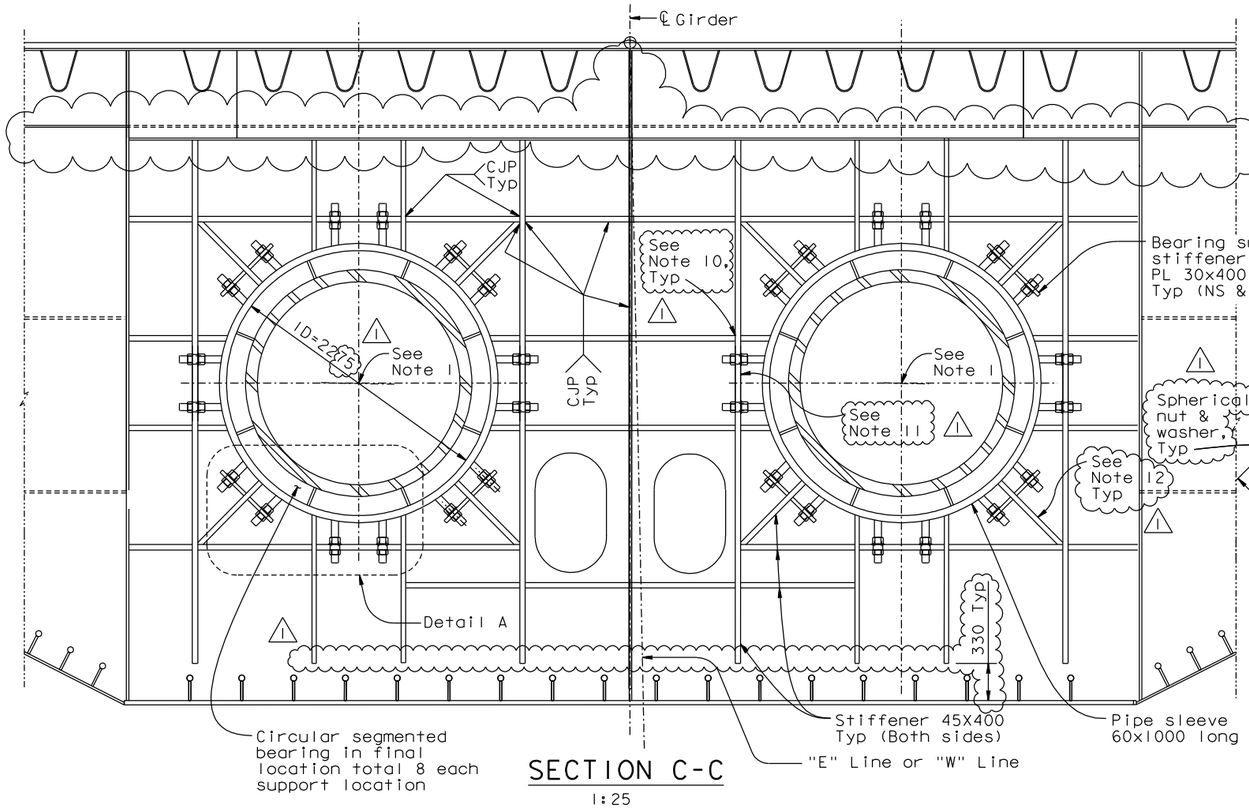

SECTION C-C
1:25

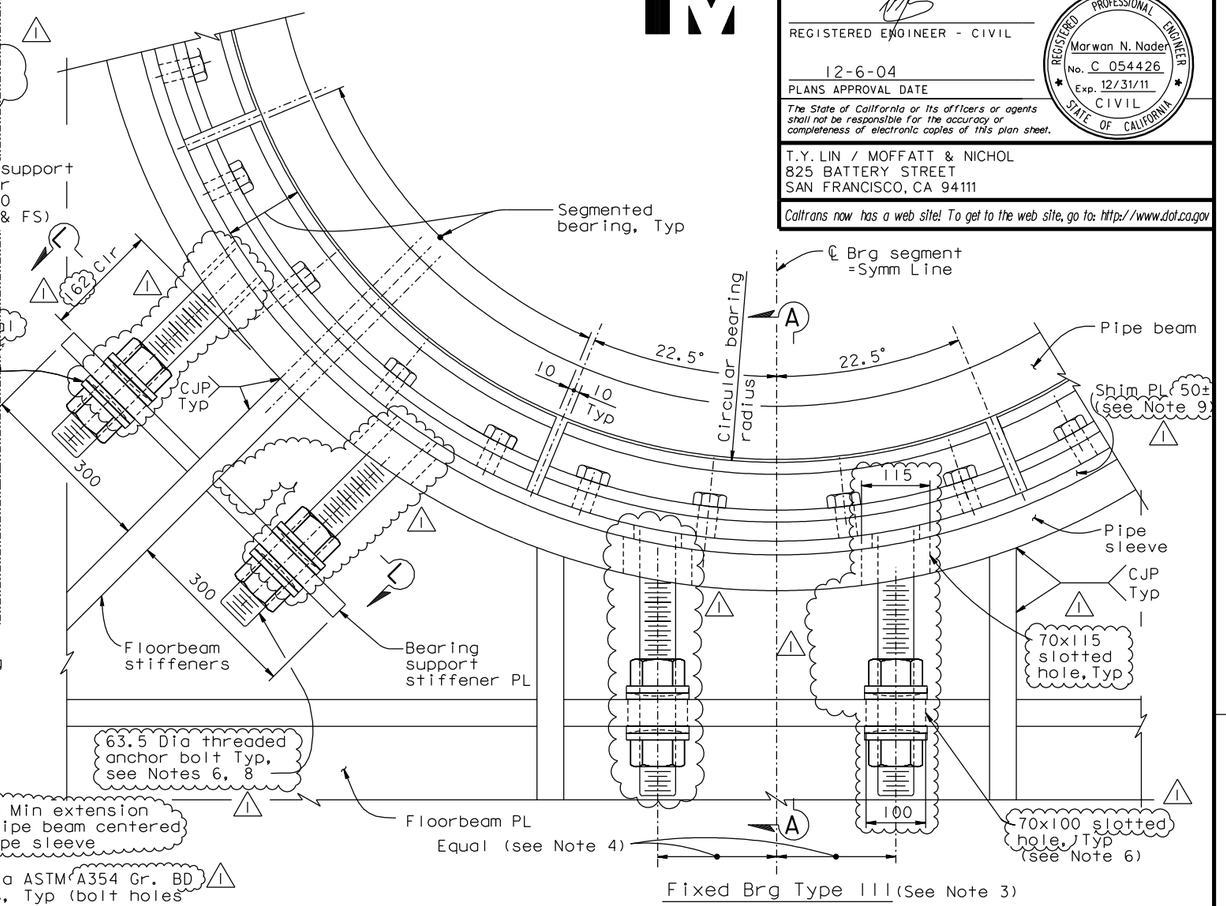

DETAIL A
NTS

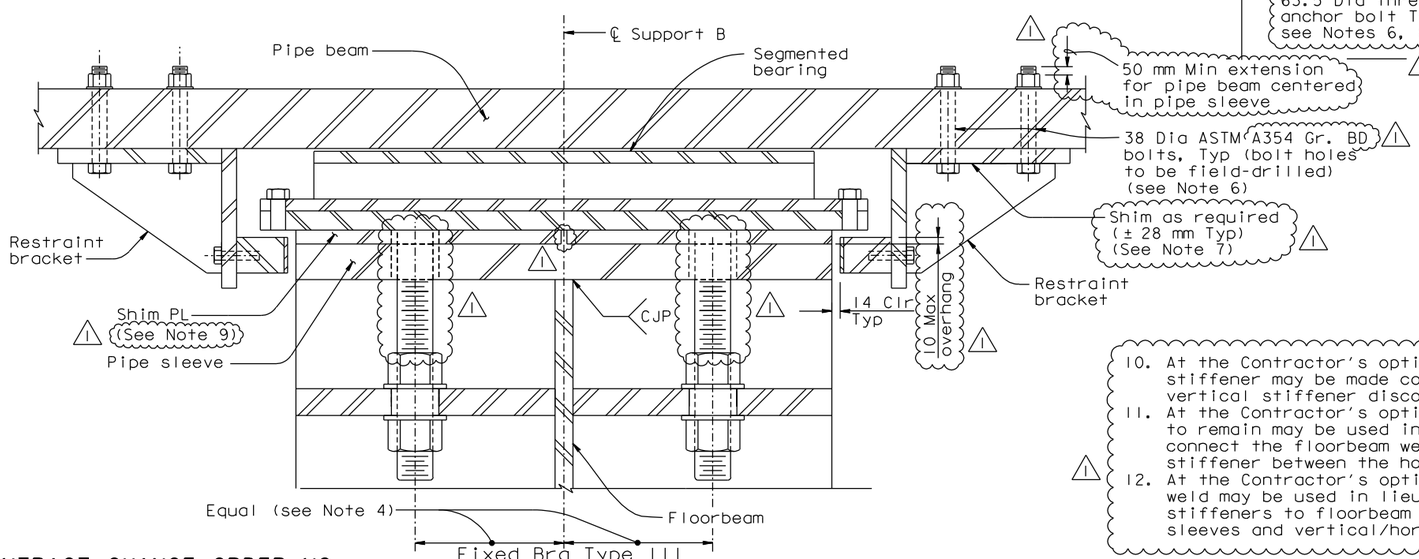

SECTION A-A
NTS

NOTES:

1. For locations of BBIW, BBOE, BBOW and BBIE, see "Hinge A Geometry Layout" sheets.
2. For details not shown, see "Floorbeam at East Transition No.10" sheet.
3. For fixed bearing Type III, see "Hinge A Details No.7" sheet.
4. Verify bearing anchor bolt spacing before drilling oversize bolt holes.
5. For Section L-L, see "Hinge A Details No.6" sheet.
6. The bolt sizes shown correspond to US Standard bolt sizes.
7. Shim as required to align restrainer bracket bearing pad with pipe sleeve.
8. The Contractor shall furnish new 63.5x530 long ASTM A449 galvanized threaded rods for fixed fixed bearing Type III, and shall verify fit into drilled and tapped holes in existing anchor plates.
9. At the Contractor's option, the shim PL may be replaced with high strength non-shrink grout, subject to review and approval of the Engineer.
10. At the Contractor's option, the horizontal stiffener may be made continuous and the vertical stiffener discontinuous.
11. At the Contractor's option, a CJP with backing to remain may be used in lieu of a CJP to connect the floorbeam web and vertical stiffener between the horizontal stiffeners.
12. At the Contractor's option, a 32 mm double fillet weld may be used in lieu of a CJP on diagonal stiffeners to floorbeam web between hinge pipe sleeves and vertical/horizontal stiffeners.

CONTRACT CHANGE ORDER NO. ____
SHEET ____ OF ____

REQUESTS FOR INFORMATION NOT ADDRESSED IN THIS CCO REMAIN IN FORCE

ALL DIMENSIONS ARE IN MILLIMETERS UNLESS OTHERWISE SHOWN

R. Valizadeh/V. Toan/Y.L./W.L./F.C.
DESIGN OVERSIGHT
Roya Valizadeh / Vong Toan / Y. Liu
SIGN OFF DATE 07/30/10

MARK	DATE	DESCRIPTIONS	BY	CH'D	CCO#
1	07/30/10	HINGE A MODIFICATIONS	MN	NV	120

REVISIONS

	BY	CHECKED
DESIGN	M. Nader	N. Vo
DETAILS	G. Baker	N. Vo
QUANTITIES	G. Baker	N. Vo

PREPARED FOR THE STATE OF CALIFORNIA DEPARTMENT OF TRANSPORTATION

R. Manzanarez
PROJECT ENGINEER

BRIDGE NO. 34-0006L/R
KILOMETER POST 13.2/13.9

SAN FRANCISCO OAKLAND BAY BRIDGE
EAST SPAN SEISMIC SAFETY PROJECT
SELF-ANCHORED SUSPENSION BRIDGE
(SUPERSTRUCTURE & TOWER)

HINGE A DETAILS NO. 3

Rev. Date: 5-18-98

ORIGINAL SCALE IN MILLIMETERS FOR REDUCED PLANS 0 10 20 30 40 50 60 70 80 90 100

CU 04
EA 0120F1

DISREGARD PRINTS BEARING EARLIER REVISION DATES

REVISION DATES (PRELIMINARY STAGE ONLY) 04/08/02 07/01/02 12/19/02

SHEET 437R1 OF

FILE => I:\bb\04-012001\sas\contract plans and cco\cco\cco#120\2-revsion 07-30-10\dgn\ahhng03.dgn

100% PS&E

USERNAME => dwinrow DATE PLOTTED => 30 JUL 2010 TIME PLOTTED => 11:01:09