DIST.	COUNTY	ROUTE	KILOMETER POST TOTAL PROJECT	SHEET NO.	TOTAL SHEETS
04	SF	80	13.2/13.9	712R1	1204

Caltrans Metric

George Baker
REGISTERED ENGINEER - CIVIL
12-6-04
PLANS APPROVAL DATE

REGISTERED PROFESSIONAL ENGINEER George S. Baker No. C 57112 Exp. 12/31/05 CIVIL STATE OF CALIFORNIA

The State of California or its officers or agents shall not be responsible for the accuracy or completeness of electronic copies of this plan sheet.

T.Y. LIN / MOFFATT & NICHOL
825 BATTERY STREET
SAN FRANCISCO, CA 94111

Caltrans now has a web site! To get to the web site, go to: http://www.dot.ca.gov

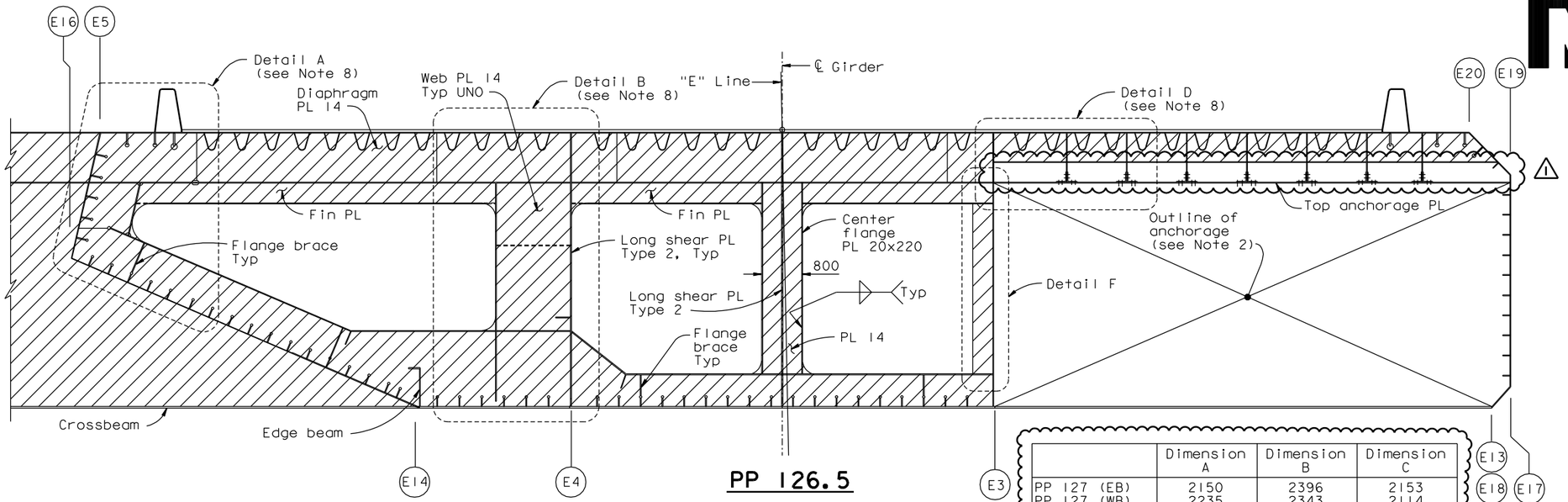

PP 126.5

	Dimension A	Dimension B	Dimension C
PP 127 (EB)	2150	2396	2153
PP 127 (WB)	2235	2343	2114
PP 127.3 (EB)	2144	2402	2150
PP 127.3 (WB)	2221	2355	2115

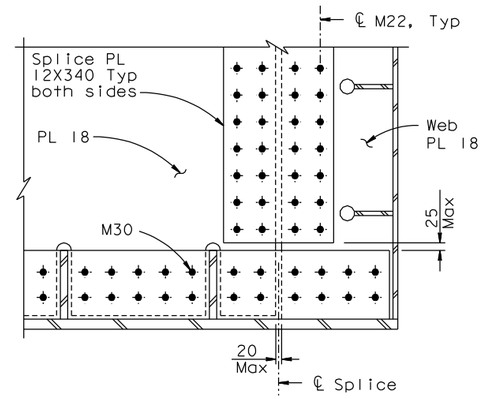

DETAIL C
1:10

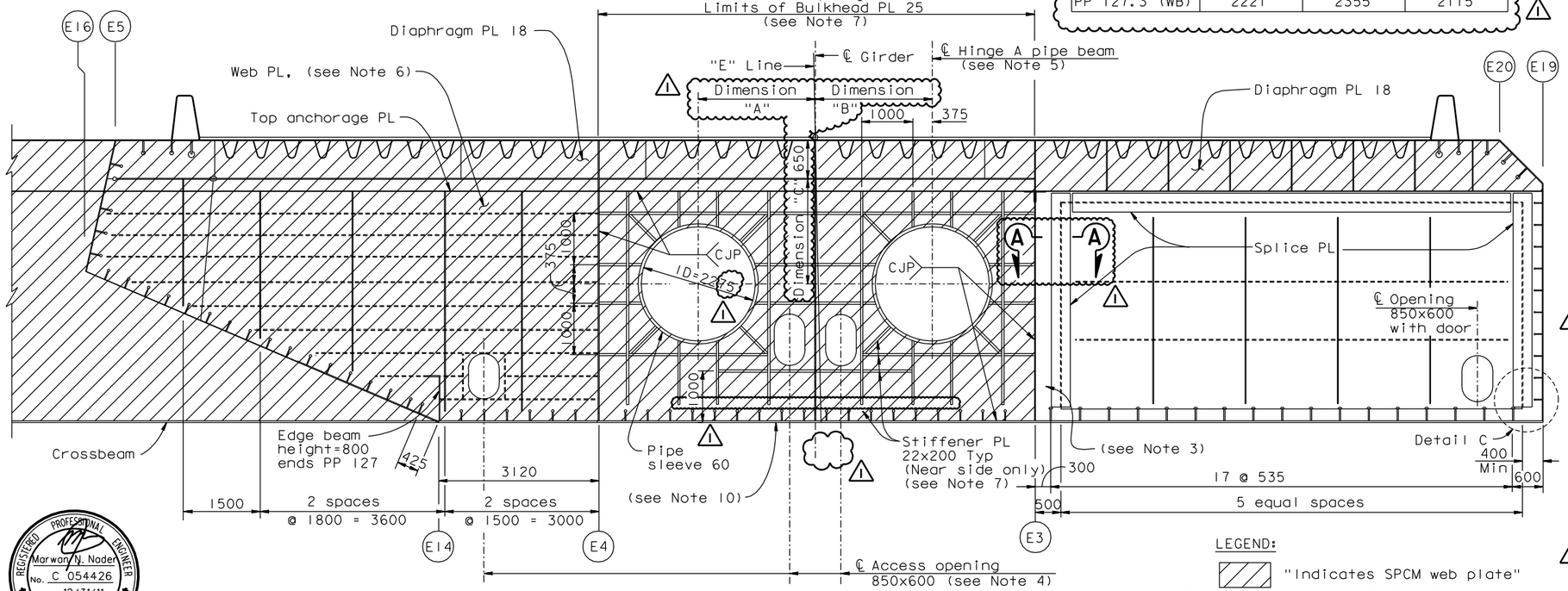

PP 127
"E" LINE SECTION (see Note 9)
1:50

LEGEND:
"Indicates SPCM web plate"

NOTES:

1. For floorbeam details not shown, see "Typical Floorbeam Details" sheets. For dimensions not shown, see "Girder At East Transition" sheets.
2. For anchorage details, see "East Cable Anchorage "E" Line Layout" sheets and "Girder At East Transition No.14" sheet.
3. For splice of floorbeam to longitudinal shear plate at PP127, see "Girder At East Transition" sheets.
4. For details of access opening, see "Typical Girder Details No.7" sheet. Center access openings between adjacent stiffeners.
5. For details of pipe beam, see "Hinge A Details" sheets.
6. For floorbeam web plate details at PP127, see "Floorbeam At East Transition Details No.2" sheet.
7. Bulkhead is similar to diaphragm PL. For details of diaphragm and bulkhead not shown, see "Hinge A Details" sheets.
8. For Details A, B, D and F, see "Floorbeam At East Transition Details" sheets.
9. "E" Line girder is shown. "W" Line girder is similar. For both "E" Line and "W" Line, Dimension A shall be taken to the North of the CL girder and Dimension B to the South of the CL girder.
10. For stiffener transitions, see "Typical Girder Details No.16" sheet.
11. For Section A-A, see "Floorbeam At East Transition No.8A" sheet.

ALL DIMENSIONS ARE IN MILLIMETERS UNLESS OTHERWISE SHOWN

REGISTERED PROFESSIONAL ENGINEER Marwan N. Nader No. C 054426 Exp. 12/31/11 CIVIL STATE OF CALIFORNIA

FOR REVISIONS ONLY

CONTRACT CHANGE ORDER NO. ____
SHEET ___ OF ___

REQUESTS FOR INFORMATION NOT ADDRESSED IN THIS CCO REMAIN IN FORCE

R. Valizadeh/V. Toan/Y.L./W.L./F.C.
DESIGN OVERSIGHT
SIGN OFF DATE 04/09/10

MARK	DATE	DESCRIPTIONS	BY	CH'D	CCO#
1	04/09/10	HINGE A MODIFICATIONS	MN	GB	120

REVISIONS

	BY	CHECKED
DESIGN	G. Baker	P. Ritchie
DETAILS	S. Camo	T. McMeans
QUANTITIES	C. Mauch	M. Roberts

PREPARED FOR THE STATE OF CALIFORNIA DEPARTMENT OF TRANSPORTATION

R. Manzanarez
PROJECT ENGINEER

BRIDGE NO. 34-0006L/R
KILOMETER POST 13.2/13.9

SAN FRANCISCO OAKLAND BAY BRIDGE
EAST SPAN SEISMIC SAFETY PROJECT
SELF-ANCHORED SUSPENSION BRIDGE
(SUPERSTRUCTURE & TOWER)

FLOORBEAM AT EAST TRANSITION NO.8

Rev. Date: 5-18-98

ORIGINAL SCALE IN MILLIMETERS FOR REDUCED PLANS 0 10 20 30 40 50 60 70 80 90 100

CU 04
EA 0120F1

DISREGARD PRINTS BEARING EARLIER REVISION DATES

REVISION DATES (PRELIMINARY STAGE ONLY): 05/15/99 08/02/99 05/31/01 04/08/02 07/01/02 12/19/02

SHEET 295R1 OF

FILE => I:\bb\04-012001\sas\contract plans and cco\cco\cco#120\1-original 04-09-10\dgn\agefd09.dgn

100 % PS&E

USERNAME => arivera DATE PLOTTED => 09 APR 2010 TIME PLOTTED => 14:27:46