Caltrans now has a web site! To get to the web site, go to: http://www.dot.ca.gov

DIST.	COUNTY	ROUTE	KILOMETER POST TOTAL PROJECT	SHEET NO.	TOTAL SHEETS
04	SF	80	13.2/13.9	694RI	1204

George Baker
REGISTERED ENGINEER - CIVIL
12-6-04
PLANS APPROVAL DATE

The State of California or its officers or agents shall not be responsible for the accuracy or completeness of electronic copies of this plan sheet.

REGISTERED PROFESSIONAL ENGINEER — George S. Baker — No. C57112 — Exp. 12/31/05 — CIVIL — STATE OF CALIFORNIA

T.Y. LIN / MOFFATT & NICHOL
825 BATTERY STREET
SAN FRANCISCO, CA 94111

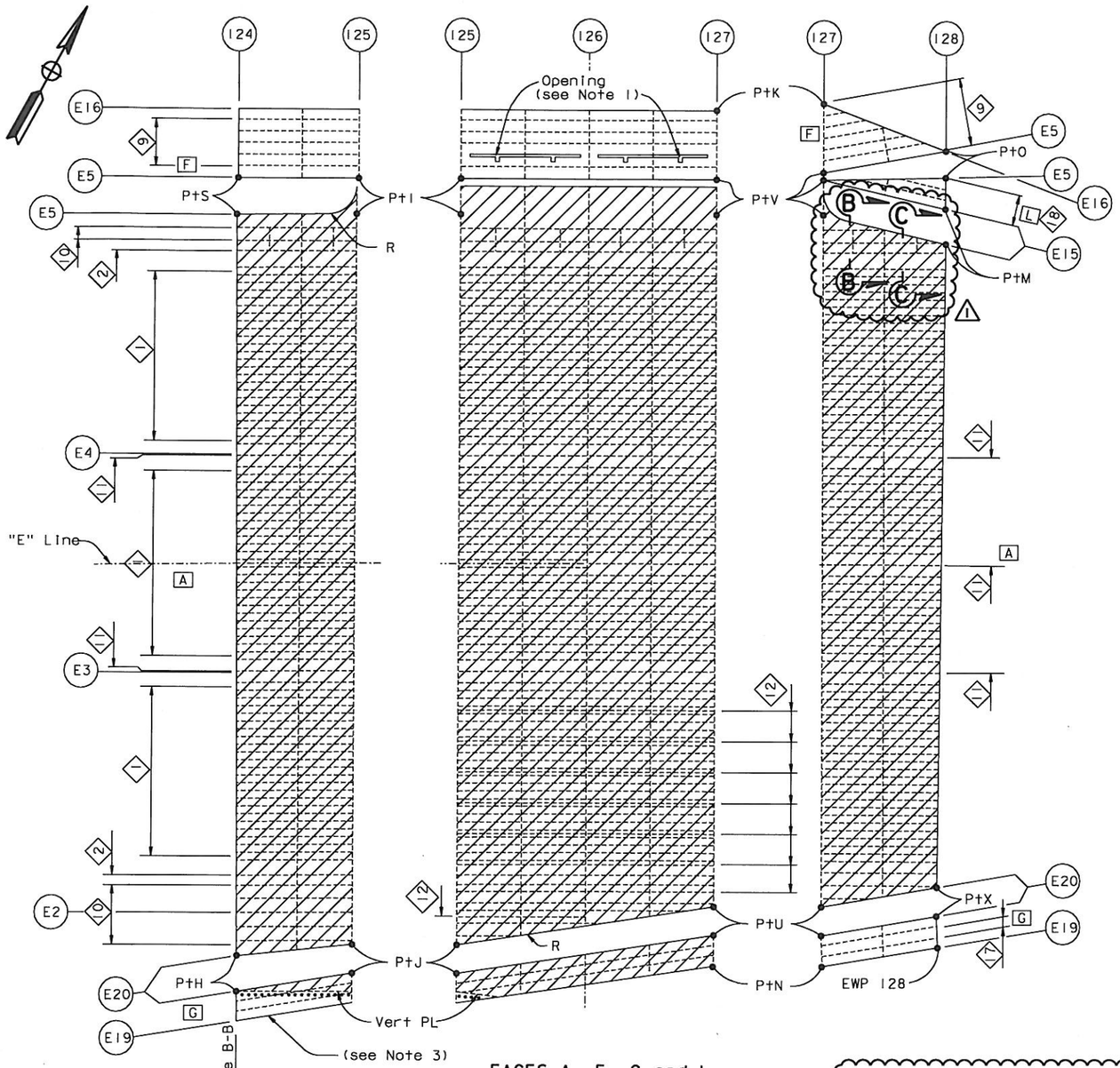

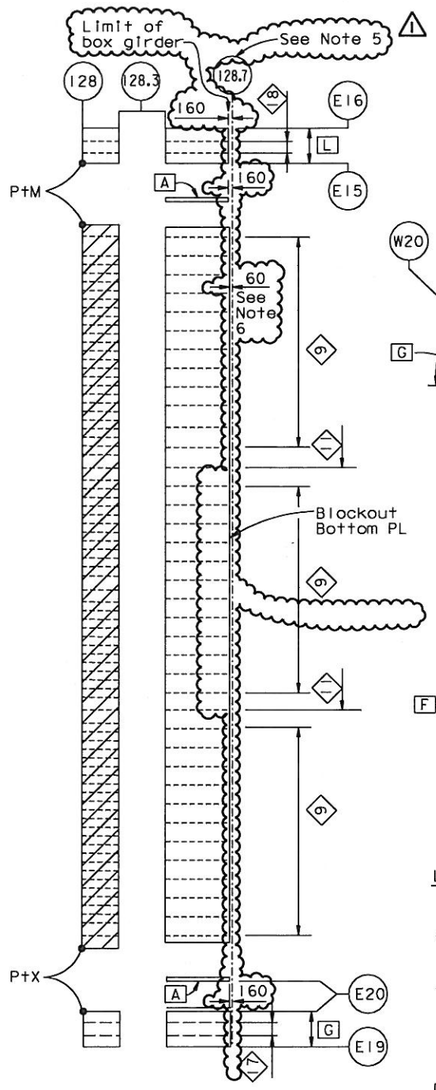

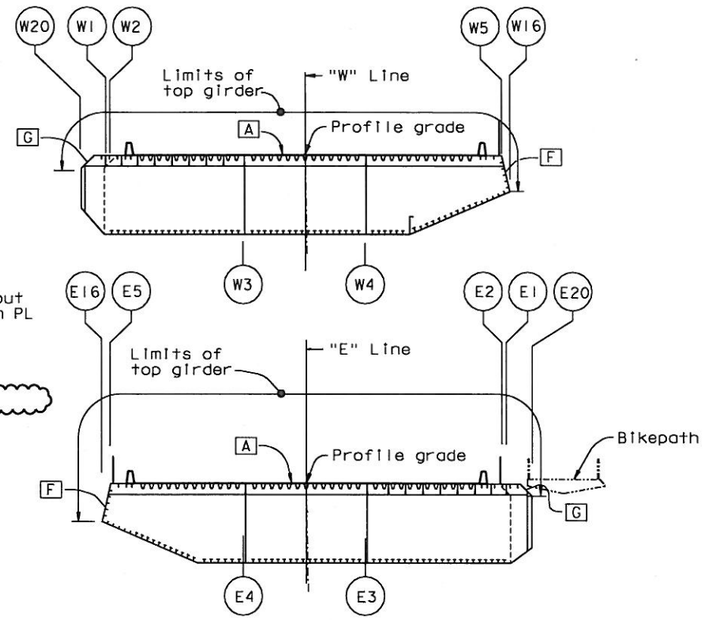

FACE KEY SECTION

1:200

LEGEND:

- [A] Girder face designation A
- ------- Stiffener type 2, 9, 10, 11 or other stiffener
- Stiffener type 1 leg
- ------- Floorbeam unless noted otherwise
- ◇ Stiffener type 1 designation
- R - Radius (see Note 2)
- ••••••• Bolted splice (see Note 3)
- "Indicates SPCM shell plate"
- see Note 4

FACES A, F, G and L ("E" LINE SHOWN, "W" LINE SIMILAR)

TOP GIRDER FACE LAYOUT

1:100

NOTES:

1. For opening details in girder plate F, see "Crossbeam At East Anchorage" sheets.
2. Plate edges identified with "R" are curved. All other plate edges are straight.
3. For PP124 to 125 the indicated portion of [G] is an architectural housing. For bolted splice details, see "Girder At East Transition Details No.3" sheet. Housing shall be installed after full cable dead load force is applied to the box girder.
4. Deleted.
5. For location of PP 128.7 see "Hinge A Geometry Layout" sheets.
6. Blockout bottom and end PLs shall extend 100 mm beyond the limit of box girder. Blockout PLs shall be field-trimmed based on the as-built bridge as directed by the Engineer.
7. For Sections B-B & C-C, see "Girder at East Transition No.12A" sheet.

ALL DIMENSIONS ARE IN MILLIMETERS UNLESS OTHERWISE SHOWN

REGISTERED PROFESSIONAL ENGINEER — Marwan N. Nader — No. C 054426 — Exp. 12/31/11 — CIVIL — STATE OF CALIFORNIA

FOR REVISIONS ONLY

CONTRACT CHANGE ORDER NO. 120
SHEET 3 OF 23

REQUESTS FOR INFORMATION NOT ADDRESSED IN THIS CCO REMAIN IN FORCE

MARK	DATE	DESCRIPTIONS	BY	CH'D	CCO#
		REVISIONS			
1	04/09/10	HINGE A MODIFICATIONS	MN	GB	120

R. Vallizadeh/V. Toan/Y.L./W.L./F.C.
DESIGN OVERSIGHT
SIGN OFF DATE 04/09/10
Rev. Date: 5-18-98

	BY	CHECKED
DESIGN	G. Baker	P. Ritchie
DETAILS	M. Gulyas	T. McMeans
QUANTITIES	G. Baker	M. Roberts

PREPARED FOR THE STATE OF CALIFORNIA DEPARTMENT OF TRANSPORTATION

R. Manzanarez
PROJECT ENGINEER

CU 04
EA 0120F1

BRIDGE NO. 34-0006L/R
KILOMETER POST 13.2/13.9

SAN FRANCISCO OAKLAND BAY BRIDGE
EAST SPAN SEISMIC SAFETY PROJECT
SELF-ANCHORED SUSPENSION BRIDGE
(SUPERSTRUCTURE & TOWER)

GIRDER AT EAST TRANSITION NO. 12

ORIGINAL SCALE IN MILLIMETERS FOR REDUCED PLANS 0 10 20 30 40 50 60 70 80 90 100

DISREGARD PRINTS BEARING EARLIER REVISION DATES →

REVISION DATES (PRELIMINARY STAGE ONLY): 05/31/01 | 04/09/02 | 07/01/02 | 12/31/02 | 05/16/03 | 09/08/04

SHEET 277RI OF

FILE => I:\bb\04-012001\sas\contract plans and cco\cco\cco#120\I-original 04-09-10\dgn\agegd08-ri.dgn

USERNAME => crivero DATE PLOTTED => 09 APR 2010 TIME PLOTTED => 14:29:53

100 % PS&E

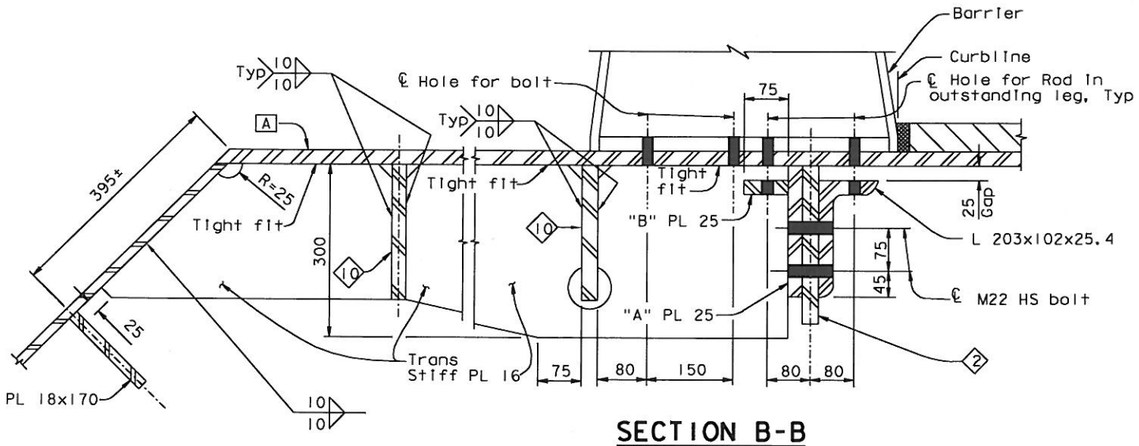

SECTION B-B

1:5

(Section at PP 127.25 Line E/W 15)

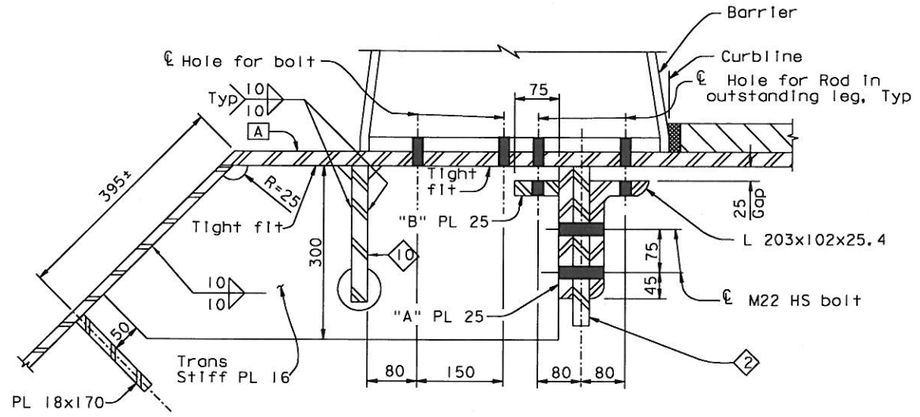

SECTION C-C

1:5

(Section at PP 127.75 Line E/W 15)

NOTES:

1. For typical barrier connection details not shown, see "Typical Girder Details No.14" sheet.
2. For typical barrier details, see "Barrier Details" sheets.

CONTRACT CHANGE ORDER NO. 120
SHEET 4 OF 23

REQUESTS FOR INFORMATION NOT ADDRESSED IN THIS CCO REMAIN IN FORCE

ALL DIMENSIONS ARE IN MILLIMETERS UNLESS OTHERWISE SHOWN

DIST.	COUNTY	ROUTE	KILOMETER POST TOTAL PROJECT	SHEET NO.	TOTAL SHEETS
04	SF	80	13.2/13.9	69451	1204

REGISTERED ENGINEER - CIVIL
04-09-10
PLANS APPROVAL DATE
Marwan N. Nader No. C 054426 Exp. 12/31/11 CIVIL STATE OF CALIFORNIA
The State of California or its officers or agents shall not be responsible for the accuracy or completeness of electronic copies of this plan sheet.

T.Y. LIN / MOFFATT & NICHOL
825 BATTERY STREET
SAN FRANCISCO, CA 94111

Caltrans now has a web site! To get to the web site, go to: http://www.dot.ca.gov

MARK	DATE	REVISIONS	BY	CH'D	CCO#
0	04/09/10	HINGE A MODIFICATIONS	HT	MN	120

	BY	CHECKED
DESIGN	H. Tazir	M. Nader
DETAILS	H. Tazir	M. Nader
QUANTITIES	H. Tazir	M. Nader

R. Vallzadeh/V. Toan/Y.L./W.L./F.C.
DESIGN OVERSIGHT
SIGN OFF DATE 04/09/10

Rev. Date: 5-18-98

PREPARED FOR THE STATE OF CALIFORNIA DEPARTMENT OF TRANSPORTATION

R. Manzanarez
PROJECT ENGINEER

CU 04
EA 0120F1

BRIDGE NO. 34-0006L/R
KILOMETER POST 13.2/13.9

DISREGARD PRINTS BEARING EARLIER REVISION DATES →

REVISION DATES (PRELIMINARY STAGE ONLY): 04/09/10

SHEET 277S1 OF

ORIGINAL SCALE IN MILLIMETERS FOR REDUCED PLANS 0 10 20 30 40 50 60 70 80 90 100

FILE => I:\bb\04-0120O1\sas\contract plans and cco\cco\cco#120\1-original 04-09-10\dgn\agegd08a.dgn

SAN FRANCISCO OAKLAND BAY BRIDGE
EAST SPAN SEISMIC SAFETY PROJECT
SELF-ANCHORED SUSPENSION BRIDGE (SUPERSTRUCTURE & TOWER)

GIRDER AT EAST TRANSITION NO. 12A

100 % PS&E

USERNAME => arivera DATE PLOTTED => 09 APR 2010 TIME PLOTTED => 14:30:33

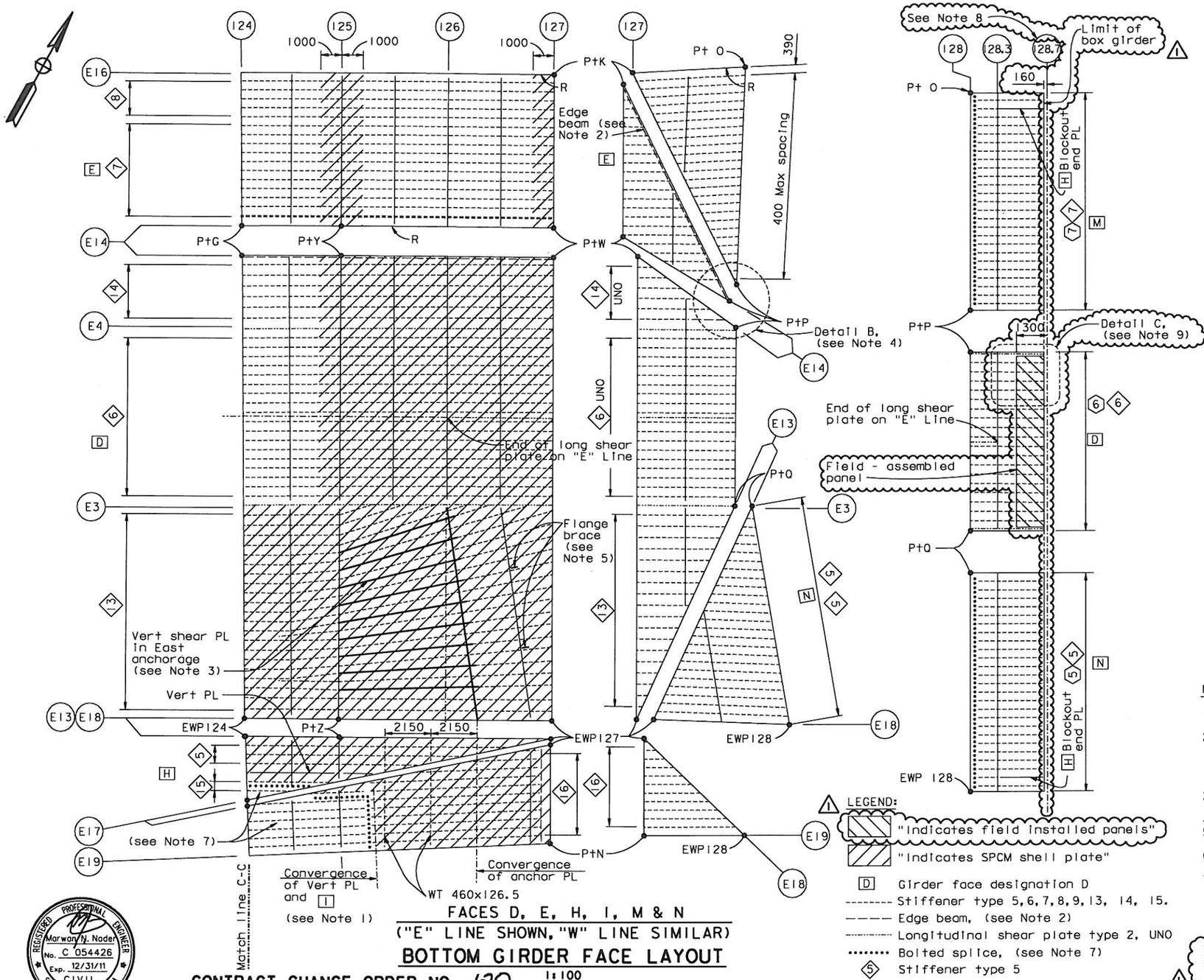

FACES D, E, H, I, M & N
("E" LINE SHOWN, "W" LINE SIMILAR)

BOTTOM GIRDER FACE LAYOUT

1:100

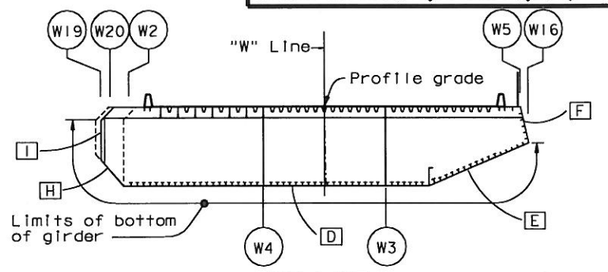

"W" LINE

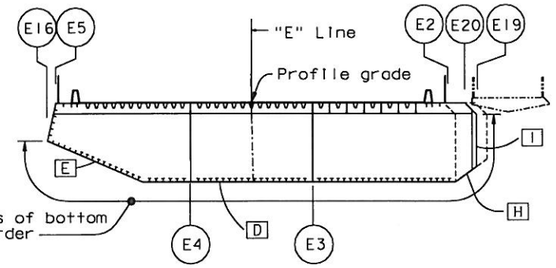

"E" LINE

FACE KEY SECTION

1:200

NOTES:

1. For details of convergence of vertical plate and girder plate I, see "Girder At East Transition Details No.3" sheet.
2. Edge beam shall have same dimensions and details as longitudinal shear plate type 1 UNO. See "Typical Girder Details No.8" and "Typical Floorbeam Details No.5" sheets. For edge beam connection at PP128 see Detail B on "Girder At East Transition Details No.3" sheet.
3. For east anchorage details, see "East Cable Anchorage "E" Line Layout" sheets.
4. For Detail B, see "Girder At East Transition Details No.3" sheet.
5. For flange brace details, see "Floorbeam At East Transition" sheets.
6. Plate edges identified with "R" are curved. All other plate edges are straight.
7. For PP124 to 125.5 the indicated portions of H and I bounded by the bolted splices are architectural housings. For bolted splice details, see "Girder At East Transition Details No.3" sheet. Housing shall be installed after full cable dead load force is applied to the box girder.
8. For location of PP 128.7, see "Hinge A Geometry Layout" sheets.
9. For Detail C, see "Girder At East Transition Details No.5" sheet.

DIST.	COUNTY	ROUTE	KILOMETER POST TOTAL PROJECT	SHEET NO.	TOTAL SHEETS
04	SF	80	13.2/13.9	696RI	1204

George Baker
REGISTERED ENGINEER - CIVIL
12-6-04
PLANS APPROVAL DATE

REGISTERED PROFESSIONAL ENGINEER — George S. Baker — No. C57112 — Exp. 12/31/05 — CIVIL — STATE OF CALIFORNIA

The State of California or its officers or agents shall not be responsible for the accuracy or completeness of electronic copies of this plan sheet.

T.Y. LIN / MOFFATT & NICHOL
825 BATTERY STREET
SAN FRANCISCO, CA 94111

Caltrans now has a web site! To get to the web site, go to: http://www.dot.ca.gov

REGISTERED PROFESSIONAL ENGINEER — Marwan N. Nader — No. C 054426 — Exp. 12/31/11 — CIVIL — STATE OF CALIFORNIA

FOR REVISIONS ONLY

CONTRACT CHANGE ORDER NO. 120
SHEET 5 OF 23

REQUESTS FOR INFORMATION NOT ADDRESSED IN THIS CCO REMAIN IN FORCE

ALL DIMENSIONS ARE IN MILLIMETERS UNLESS OTHERWISE SHOWN

MARK	DATE	DESCRIPTIONS	BY	CH'D	CCO#
1	04/09/10	HINGE A MODIFICATIONS	MN	GB	120

REVISIONS

	BY	CHECKED
DESIGN	G. Baker	P. Ritchie
DETAILS	M. Gulyas	T. McMeans
QUANTITIES	G. Baker	M. Roberts

PREPARED FOR THE STATE OF CALIFORNIA
DEPARTMENT OF TRANSPORTATION

R. Manzanarez
PROJECT ENGINEER

BRIDGE NO. 34-0006L/R
KILOMETER POST 13.2/13.9

SAN FRANCISCO OAKLAND BAY BRIDGE
EAST SPAN SEISMIC SAFETY PROJECT
SELF-ANCHORED SUSPENSION BRIDGE
(SUPERSTRUCTURE & TOWER)

GIRDER AT EAST TRANSITION NO. 14

R. Vaziadeh/V. Toan/Y.L./W.L./F.C.
DESIGN OVERSIGHT
SIGN OFF DATE 04/09/10

Rev. Date: 5-18-98

ORIGINAL SCALE IN MILLIMETERS FOR REDUCED PLANS 0 10 20 30 40 50 60 70 80 90 100

CU 04
EA 0120F1

DISREGARD PRINTS BEARING EARLIER REVISION DATES

REVISION DATES (PRELIMINARY STAGE ONLY)							SHEET	OF
08/28/98	05/27/99	04/28/00	07/28/00	12/29/00	05/16/03		279RI	

FILE => I:\bb\04-0120I\sas\contract plans and cco\cco\cco*120\I-original 04-09-10\dgn\agegd10.dgn

USERNAME => orivera DATE PLOTTED => 09 APR 2010 TIME PLOTTED => 14:31:18

100 % PS&E

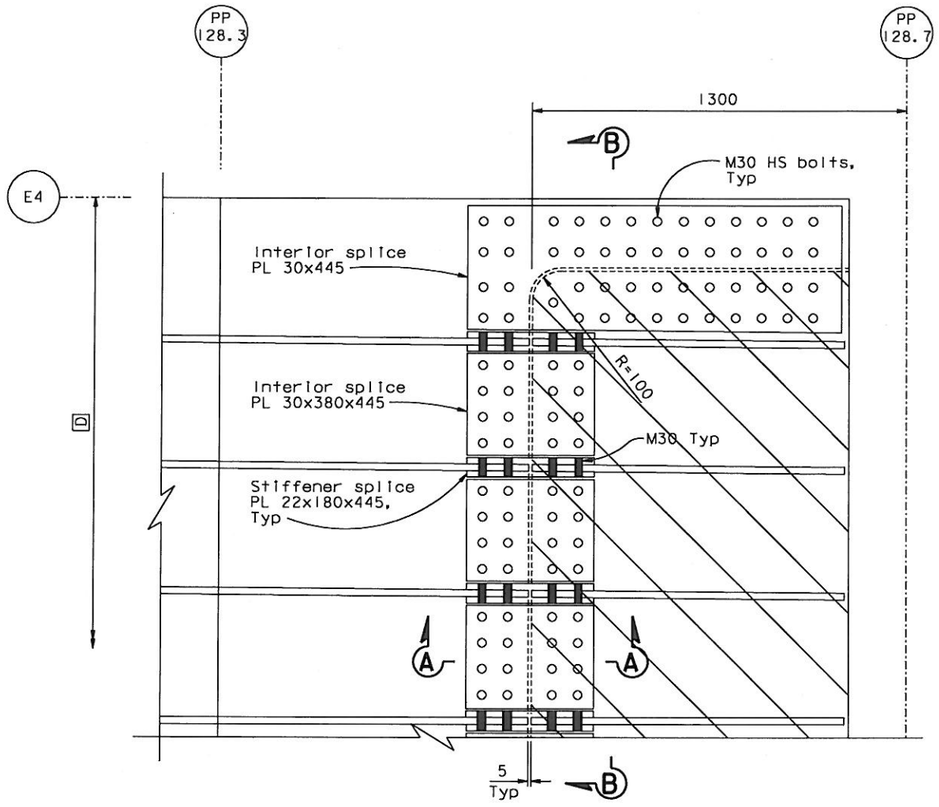

DETAIL C

("E" Line shown "W" Line similar)

1:10

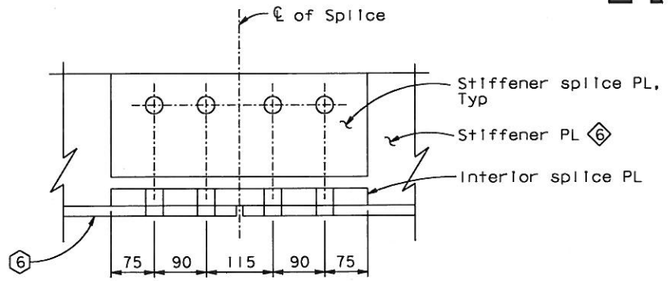

SECTION A-A

1:5

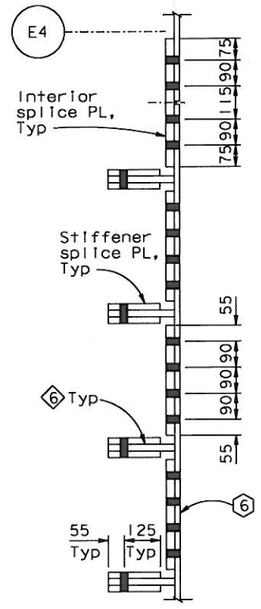

SECTION B-B

1:10

LEGEND:

Indicates Field Installed Panel

CONTRACT CHANGE ORDER NO. 120
SHEET 6 OF 23

REQUESTS FOR INFORMATION NOT ADDRESSED IN THIS CCO REMAIN IN FORCE

ALL DIMENSIONS ARE IN MILLIMETERS UNLESS OTHERWISE SHOWN

DIST.	COUNTY	ROUTE	KILOMETER POST TOTAL PROJECT	SHEET NO.	TOTAL SHEETS
04	SF	80	13.2/13.9	704SI	1204

REGISTERED ENGINEER - CIVIL

Marwan N. Nader No. C 054426 Exp. 12/31/11 CIVIL — REGISTERED PROFESSIONAL ENGINEER — STATE OF CALIFORNIA

04-09-10
PLANS APPROVAL DATE

The State of California or its officers or agents shall not be responsible for the accuracy or completeness of electronic copies of this plan sheet.

T.Y. LIN / MOFFATT & NICHOL
825 BATTERY STREET
SAN FRANCISCO, CA 94111

Caltrans now has a web site! To get to the web site, go to: http://www.dot.ca.gov

MARK	DATE	REVISIONS: DESCRIPTIONS	BY	CH'D	CCO#
6	04/09/10	HINGE A MODIFICATIONS	SS	MN	120

	BY		CHECKED
DESIGN	S. Shi		M. Nader
DETAILS	S. Shi		M. Nader
QUANTITIES	S. Shi		M. Nader

PREPARED FOR THE STATE OF CALIFORNIA DEPARTMENT OF TRANSPORTATION

R. Manzanarez
PROJECT ENGINEER

BRIDGE NO. 34-0006L/R
KILOMETER POST 13.2/13.9

SAN FRANCISCO OAKLAND BAY BRIDGE
EAST SPAN SEISMIC SAFETY PROJECT
SELF-ANCHORED SUSPENSION BRIDGE (SUPERSTRUCTURE & TOWER)

GIRDER AT EAST TRANSITION DETAILS NO.5

R. Vallzadeh/V. Toon/Y.L./W.L./F.C.
DESIGN OVERSIGHT
SIGN OFF DATE 04/09/10

Rev. Date: 5-18-98

ORIGINAL SCALE IN MILLIMETERS FOR REDUCED PLANS 0 10 20 30 40 50 60 70 80 90 100

CU 04
EA 0120F1

DISREGARD PRINTS BEARING EARLIER REVISION DATES →

REVISION DATES (PRELIMINARY STAGE ONLY): 04/09/10

SHEET 287SI OF

FILE => I:\bb\04-0120I\sas\contract plans and cco\cco\cco#120\1-original 04-09-10\dgn\agandl5a.dgn

100% PS&E

USERNAME => orivera DATE PLOTTED => 09 APR 2010 TIME PLOTTED => 14:24:13

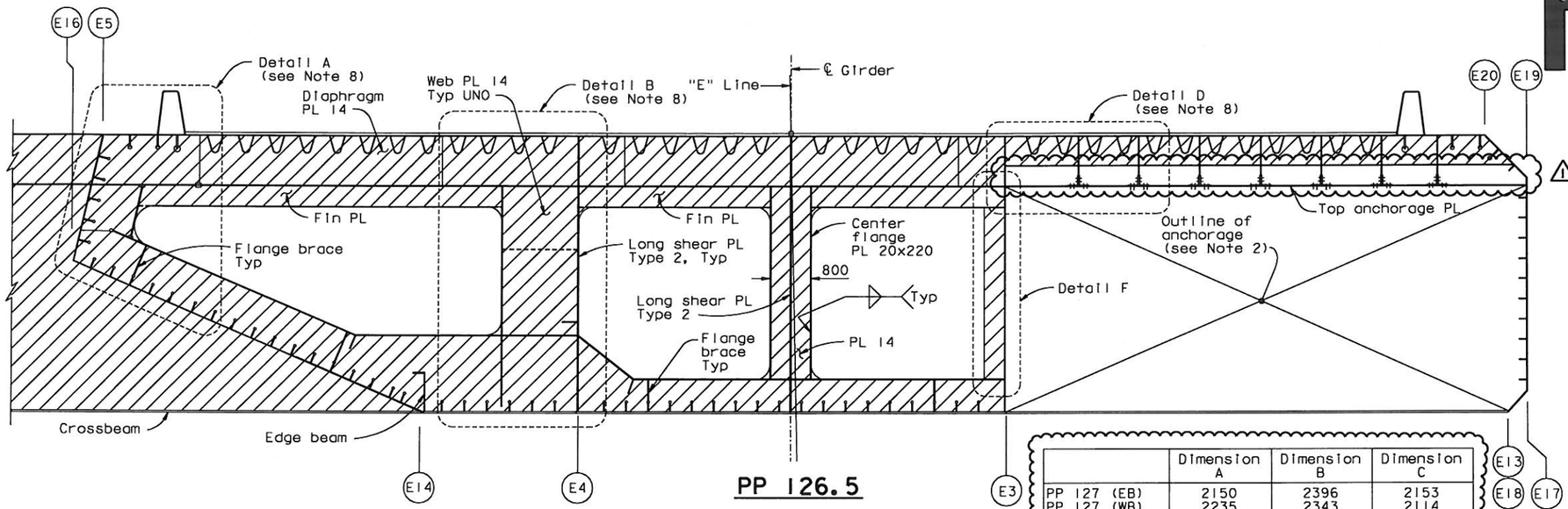

PP 126.5

	Dimension A	Dimension B	Dimension C
PP 127 (EB)	2150	2396	2153
PP 127 (WB)	2235	2343	2114
PP 127.3 (EB)	2144	2402	2150
PP 127.3 (WB)	2221	2355	2115

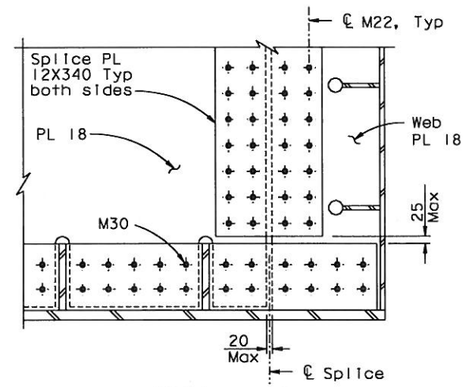

DETAIL C
1:10

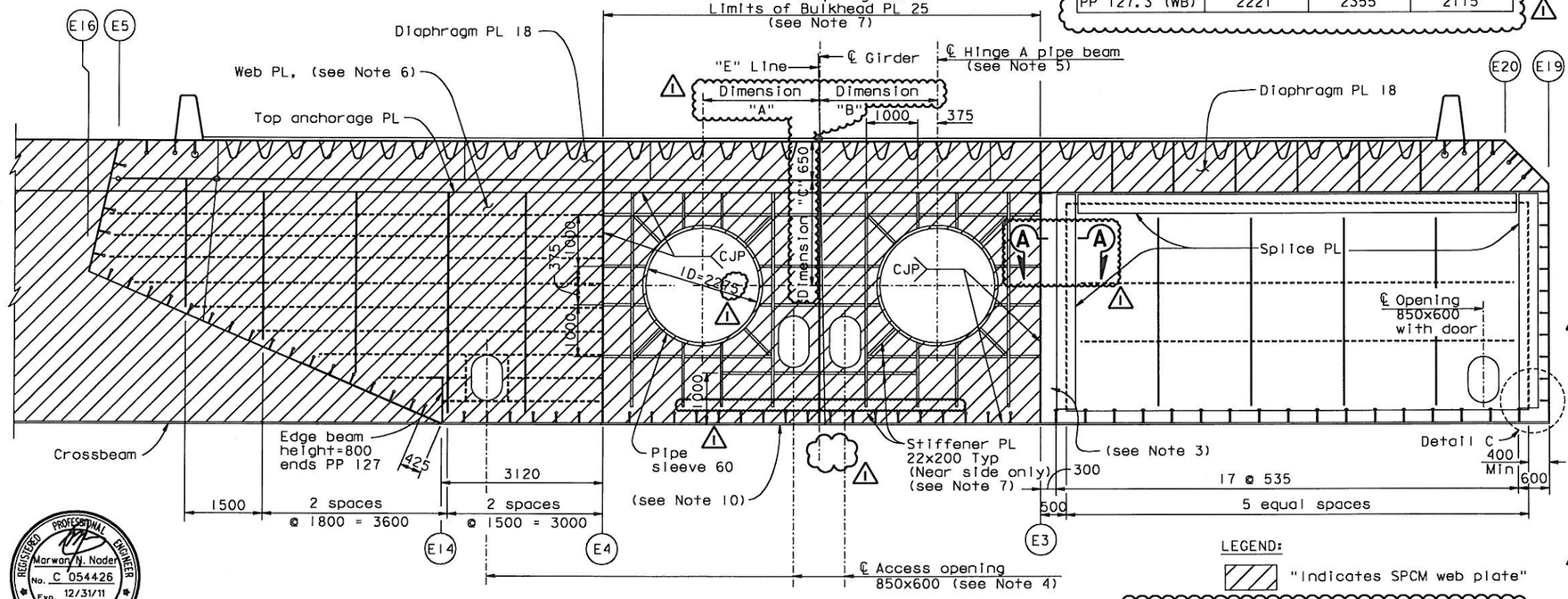

PP 127

"E" LINE SECTION (see Note 9)
1:50

LEGEND:

"Indicates SPCM web plate"

ALL DIMENSIONS ARE IN MILLIMETERS UNLESS OTHERWISE SHOWN

NOTES:

1. For floorbeam details not shown, see "Typical Floorbeam Details" sheets. For dimensions not shown, see "Girder At East Transition" sheets.
2. For anchorage details, see "East Cable Anchorage "E" Line Layout" sheets and "Girder At East Transition No.14" sheet.
3. For splice of floorbeam to longitudinal shear plate at PP127, see "Girder At East Transition" sheets.
4. For details of access opening, see "Typical Girder Details No.7" sheet. Center access openings between adjacent stiffeners.
5. For details of pipe beam, see "Hinge A Details" sheets.
6. For floorbeam web plate details at PP127, see "Floorbeam At East Transition Details No.2" sheet.
7. Bulkhead is similar to diaphragm PL. For details of diaphragm and bulkhead not shown, see "Hinge A Details" sheets.
8. For Details A, B, D and F, see "Floorbeam At East Transition Details" sheets.
9. "E" Line girder is shown, "W" Line girder is similar. For both "E" Line and "W" Line, Dimension A shall be taken to the North of the CL girder and Dimension B to the South of the CL girder.
10. For stiffener transitions, see "Typical Girder Details No.16" sheet.
11. For Section A-A, see "Floorbeam At East Transition No.8A" sheet.

DIST.	COUNTY	ROUTE	KILOMETER POST TOTAL PROJECT	SHEET NO.	TOTAL SHEETS
04	SF	80	13.2/13.9	712RI	1204

George Baker
REGISTERED ENGINEER - CIVIL
12-6-04
PLANS APPROVAL DATE

REGISTERED PROFESSIONAL ENGINEER — George S. Baker — No. C 57112 — Exp. 12/31/05 — CIVIL — STATE OF CALIFORNIA

The State of California or its officers or agents shall not be responsible for the accuracy or completeness of electronic copies of this plan sheet.

T.Y. LIN / MOFFATT & NICHOL
825 BATTERY STREET
SAN FRANCISCO, CA 94111

Caltrans now has a web site! To get to the web site, go to: http://www.dot.ca.gov

REGISTERED PROFESSIONAL ENGINEER — Marwan N. Nader — No. C 054426 — Exp. 12/31/11 — CIVIL — STATE OF CALIFORNIA

FOR REVISIONS ONLY

CONTRACT CHANGE ORDER NO. 120
SHEET 7 OF 23

REQUESTS FOR INFORMATION NOT ADDRESSED IN THIS CCO REMAIN IN FORCE

MARK	DATE	REVISIONS	BY	CH'D	CCO#
1	04/09/10	HINGE A MODIFICATIONS	MN	GB	120

	BY	CHECKED
DESIGN	G. Baker	P. Ritchie
DETAILS	S. Cama	T. McMeans
QUANTITIES	C. Mauch	M. Roberts

PREPARED FOR THE STATE OF CALIFORNIA
DEPARTMENT OF TRANSPORTATION

R. Manzanarez
PROJECT ENGINEER

BRIDGE NO. 34-0006L/R
KILOMETER POST 13.2/13.9

SAN FRANCISCO OAKLAND BAY BRIDGE
EAST SPAN SEISMIC SAFETY PROJECT
SELF-ANCHORED SUSPENSION BRIDGE
(SUPERSTRUCTURE & TOWER)

FLOORBEAM AT EAST TRANSITION NO. 8

R. Valizadeh/V. Toan/Y.L./W.L./F.C.
DESIGN OVERSIGHT
Ryan Valizadeh / Vonn Toan / Y. Liu
SIGN OFF DATE 04/09/10

Rev. Date: 5-18-98

ORIGINAL SCALE IN MILLIMETERS FOR REDUCED PLANS 0 10 20 30 40 50 60 70 80 90 100

CU 04
EA 0120F1

DISREGARD PRINTS BEARING EARLIER REVISION DATES

REVISION DATES (PRELIMINARY STAGE ONLY)										SHEET	OF
05/08/98	08/28/98	05/27/99	04/06/02	07/09/02	12/13/02					295RI	

FILE => I:\bb\04-012001\sos\contract plans and cco\cco\cco#120\1-original 04-09-10\dgn\agefd09.dgn

USERNAME => grivera DATE PLOTTED => 09 APR 2010 TIME PLOTTED => 14:27:46

100 % PS&E

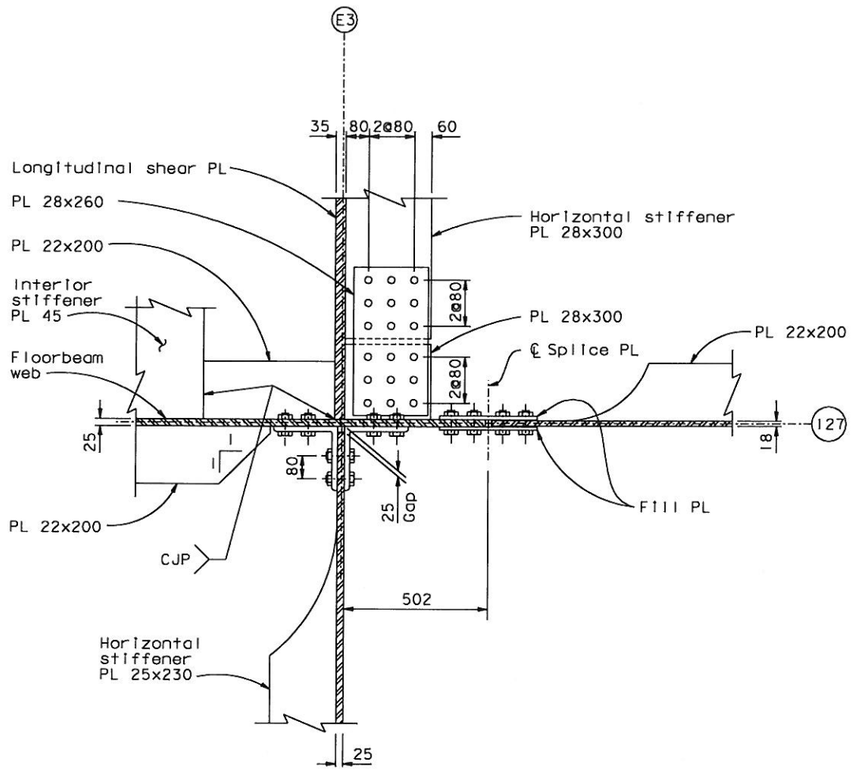

SECTION A-A
1:10

("E" line shown, "W" line similar, opposite hand)

DIST.	COUNTY	ROUTE	KILOMETER POST TOTAL PROJECT	SHEET NO.	TOTAL SHEETS
04	SF	80	13.2/13.9	712SI	1204

REGISTERED ENGINEER - CIVIL

Marwan N. Nader
No. C 054426
Exp. 12/31/11
CIVIL
REGISTERED PROFESSIONAL ENGINEER
STATE OF CALIFORNIA

04-09-10
PLANS APPROVAL DATE

The State of California or its officers or agents shall not be responsible for the accuracy or completeness of electronic copies of this plan sheet.

T.Y. LIN / MOFFATT & NICHOL
825 BATTERY STREET
SAN FRANCISCO, CA 94111

Caltrans now has a web site! To get to the web site, go to: http://www.dot.ca.gov

100 % PS&E

USERNAME => oriverc DATE PLOTTED => 09 APR 2010 TIME PLOTTED => 14:28:26

CONTRACT CHANGE ORDER NO. 120
SHEET 8 OF 23

REQUESTS FOR INFORMATION NOT ADDRESSED IN THIS CCO REMAIN IN FORCE

ALL DIMENSIONS ARE IN MILLIMETERS UNLESS OTHERWISE SHOWN

R. Vaffzadeh/V. Toan/Y.L./W.L./F.C.
DESIGN OVERSIGHT
SIGN OFF DATE 04/09/10

MARK	DATE	REVISIONS: DESCRIPTIONS	BY	CH'D	CCO#
1	04/09/10	HINGE A MODIFICATIONS	SS	MN	120

	BY	CHECKED
DESIGN	S. Shi	M. Nader
DETAILS	S. Shi	M. Nader
QUANTITIES	S. Shi	M. Nader

PREPARED FOR THE
STATE OF CALIFORNIA
DEPARTMENT OF TRANSPORTATION

R. Manzanarez
PROJECT ENGINEER

BRIDGE NO. 34-0006L/R
KILOMETER POST 13.2/13.9

SAN FRANCISCO OAKLAND BAY BRIDGE
EAST SPAN SEISMIC SAFETY PROJECT
SELF-ANCHORED SUSPENSION BRIDGE
(SUPERSTRUCTURE & TOWER)

FLOORBEAM AT EAST TRANSITION NO. 8A

Rev. Date: 5-18-98

ORIGINAL SCALE IN MILLIMETERS FOR REDUCED PLANS 0 10 20 30 40 50 60 70 80 90 100

CU 04
EA 0120F1

DISREGARD PRINTS BEARING EARLIER REVISION DATES →

REVISION DATES (PRELIMINARY STAGE ONLY): 04/09/10

SHEET 2955I OF

FILE => I:\bb\04-0120I\sas\contract plans and cco\cco\cco#120\1-original 04-09-10\dgn\agefd09a.dgn

DIST.	COUNTY	ROUTE	KILOMETER POST TOTAL PROJECT	SHEET NO.	TOTAL SHEETS
04	SF	80	13.2/13.9	714R1	1204

Caltrans Metric

George Baker
REGISTERED ENGINEER - CIVIL

12-6-04
PLANS APPROVAL DATE

REGISTERED PROFESSIONAL ENGINEER George S. Baker No. C 57112 Exp. 12/31/05 CIVIL STATE OF CALIFORNIA

The State of California or its officers or agents shall not be responsible for the accuracy or completeness of electronic copies of this plan sheet.

T.Y. LIN / MOFFATT & NICHOL
825 BATTERY STREET
SAN FRANCISCO, CA 94111

Caltrans now has a web site! To get to the web site, go to: http://www.dot.ca.gov

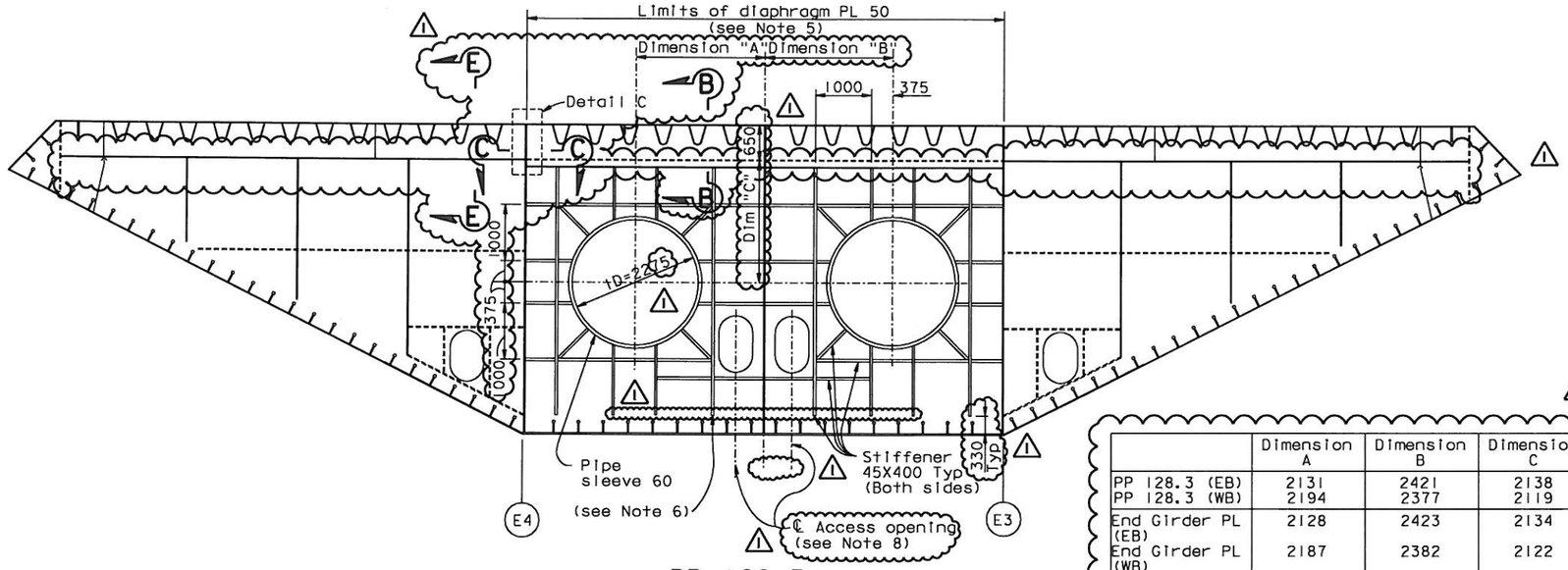

PP 128.3

	Dimension A	Dimension B	Dimension C
PP 128.3 (EB)	2131	2421	2138
PP 128.3 (WB)	2194	2377	2119
End Girder PL (EB)	2128	2423	2134
End Girder PL (WB)	2187	2382	2122

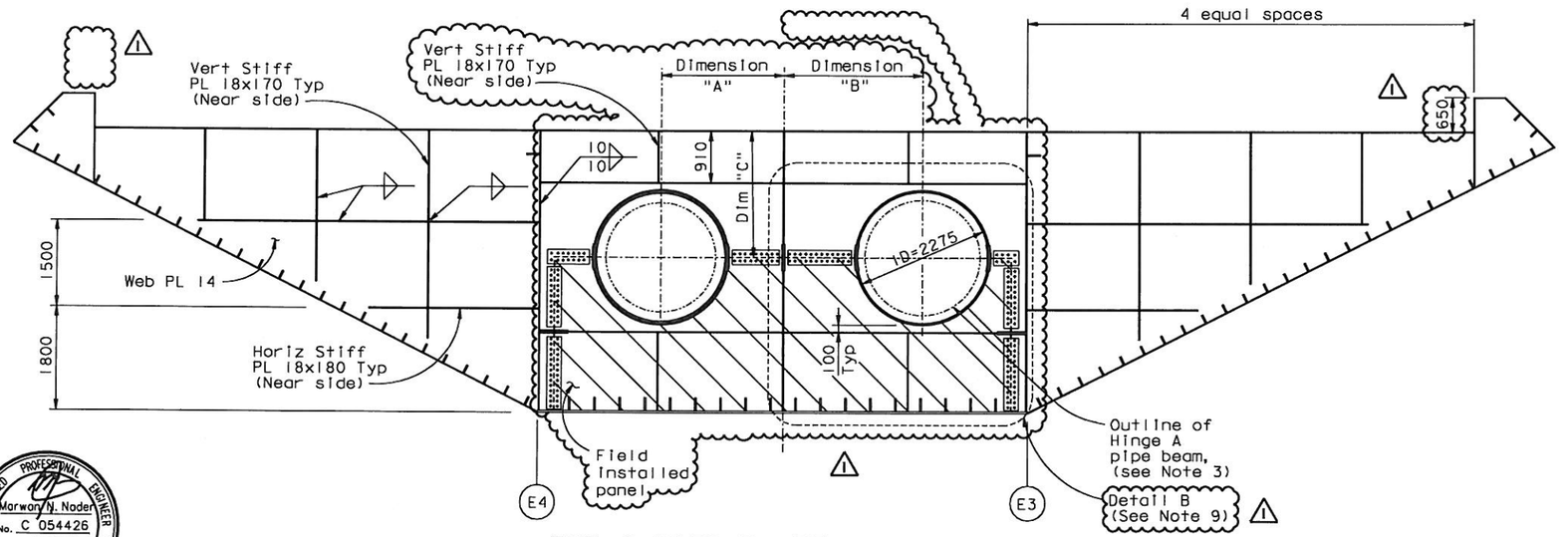

END GIRDER PLATE @ HINGE A

LEGEND:

Field installed panel

NOTES:

1. "E" Line girder is shown, "W" Line girder is similar. For both "E" Line and "W" Line, Dimension A shall be taken to the North of CL girder and Dimension B to the South of the CL girder.
2. The two side portions of floorbeam at PP128.3 and the end girder plate are similar to the typical floorbeam. For details not shown, see "Typical Floorbeam Details No. 1" sheet.
3. For details of pipe beam, see "Hinge A Details" sheets.
4. For details of access opening, see "Typical Girder Details No. 7" sheet.
5. Diaphragm layout is similar to diaphragm at PP 127. See "Floorbeam At East Transition No. 8" sheet. For other details not shown, see "Hinge A Details" sheets.
6. Stiffener transition radius is 600 mm. For other stiffener transition details, see "Typical girder details No. 16" sheet.
7. Deleted.
8. Center access openings between adjacent stiffeners.
9. For Sections B-B, C-C and E-E, and "Detail B" and Detail C" see "Floorbeam At East Transition No. 11" sheet.

REGISTERED PROFESSIONAL ENGINEER Marwan N. Nader No. C 054426 Exp. 12/31/11 CIVIL STATE OF CALIFORNIA

FOR REVISIONS ONLY

CONTRACT CHANGE ORDER NO. 120
SHEET 9 OF 23

"E" LINE SECTION (see Note 1)
1:50

REQUESTS FOR INFORMATION NOT ADDRESSED IN THIS CCO REMAIN IN FORCE

ALL DIMENSIONS ARE IN MILLIMETERS UNLESS OTHERWISE SHOWN

100 % PS&E

R. Valizadeh/V. Toan/Y.L./W.L./F.C.
DESIGN OVERSIGHT
Roger Valizadeh / Vorn Toan / Y. Liu
SIGN OFF DATE 04/09/10

MARK	DATE	DESCRIPTIONS	BY	CH'D	CCO#
1	04/09/10	HINGE A MODIFICATIONS	GB	MN	120

REVISIONS

	BY	CHECKED
DESIGN	G. Baker	P. Ritchie
DETAILS	M. Gulyas	T. McMeans
QUANTITIES	C. Mauch	M. Roberts

PREPARED FOR THE STATE OF CALIFORNIA DEPARTMENT OF TRANSPORTATION

R. Manzanarez
PROJECT ENGINEER

BRIDGE NO. 34-0006L/R
KILOMETER POST 13.2/13.9

SAN FRANCISCO OAKLAND BAY BRIDGE
EAST SPAN SEISMIC SAFETY PROJECT
SELF-ANCHORED SUSPENSION BRIDGE
(SUPERSTRUCTURE & TOWER)

FLOORBEAM AT EAST TRANSITION NO. 10

Rev. Date: 5-18-98

ORIGINAL SCALE IN MILLIMETERS FOR REDUCED PLANS 0 10 20 30 40 50 60 70 80 90 100

CU 04
EA 0120F1

DISREGARD PRINTS BEARING EARLIER REVISION DATES

REVISION DATES (PRELIMINARY STAGE ONLY) 01/15/99 05/15/99 08/02/99 05/31/01 04/08/02 07/01/02 12/19/02 05/16/03 09/06/04

SHEET 297R1 OF

FILE => I:\bb\04-012001\sas\contract plans and cco\cco\cco#120\1-original 04-09-10\dgn\agefd06f-r1.dgn

USERNAME => arivera DATE PLOTTED => 09 APR 2010 TIME PLOTTED => 14:27:03

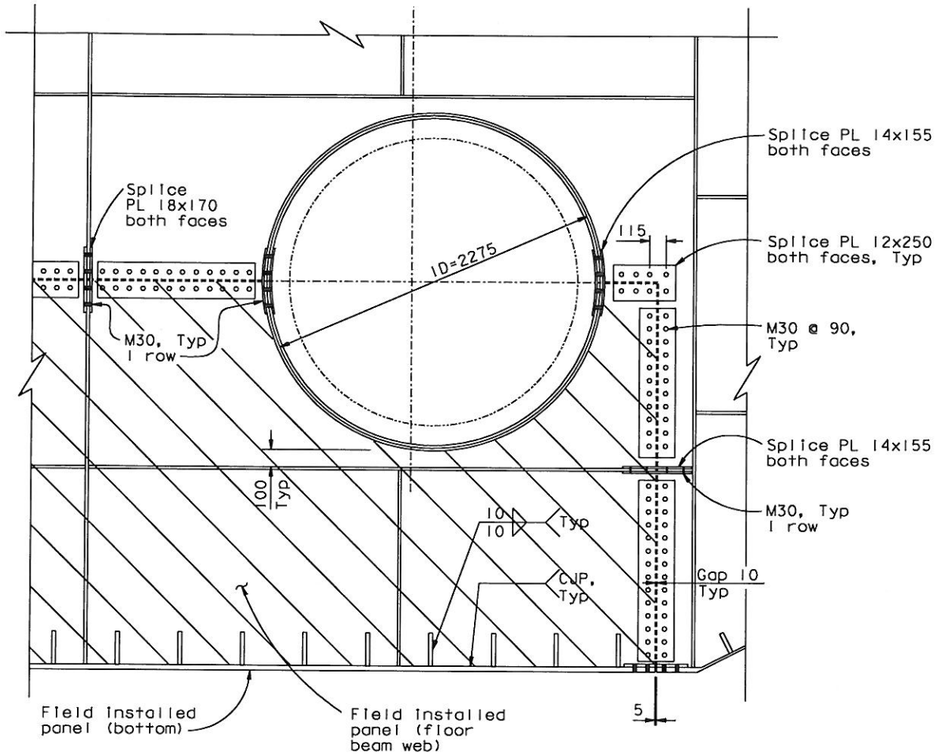

DETAIL B
1:20

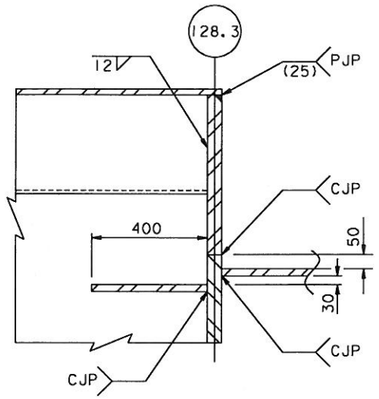

SECTION B-B
1:10

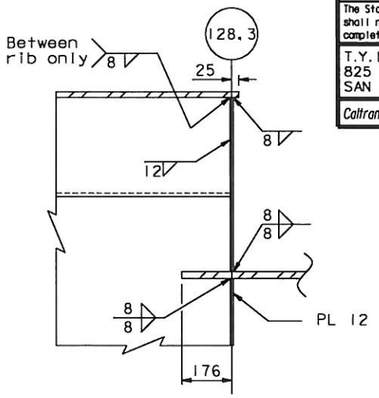

SECTION E-E
1:10

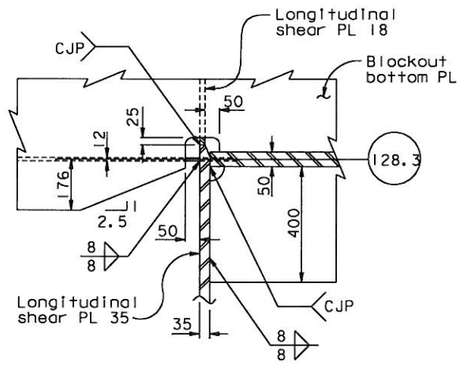

SECTION C-C
1:10

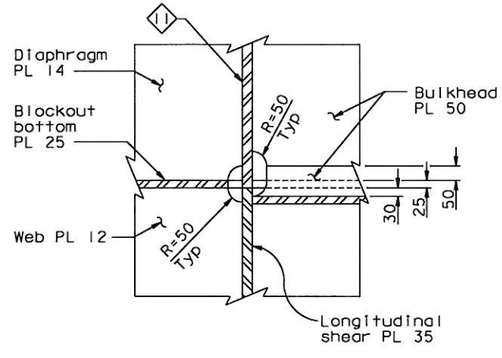

DETAIL C
1:10

LEGEND:

Indicates Field Installed Panel

DIST.	COUNTY	ROUTE	KILOMETER POST TOTAL PROJECT	SHEET NO.	TOTAL SHEETS
04	SF	80	13.2/13.9	71451	1204

REGISTERED ENGINEER - CIVIL

Marwan N. Nader No. C 054426 Exp. 12/31/11 CIVIL — REGISTERED PROFESSIONAL ENGINEER — STATE OF CALIFORNIA

04-09-10
PLANS APPROVAL DATE

The State of California or its officers or agents shall not be responsible for the accuracy or completeness of electronic copies of this plan sheet.

T.Y. LIN / MOFFATT & NICHOL
825 BATTERY STREET
SAN FRANCISCO, CA 94111

Caltrans now has a web site! To get to the web site, go to: http://www.dot.ca.gov

CONTRACT CHANGE ORDER NO. 120
SHEET 10 OF 23

REQUESTS FOR INFORMATION NOT ADDRESSED IN THIS CCO REMAIN IN FORCE

ALL DIMENSIONS ARE IN MILLIMETERS UNLESS OTHERWISE SHOWN

MARK	DATE	REVISIONS	BY	CH'D	CCO#
1	04/09/10	HINGE A MODIFICATIONS	SS	MN	120

	BY	CHECKED
DESIGN	S. Shi	M. Nader
DETAILS	S. Shi	M. Nader
QUANTITIES	S. Shi	M. Nader

PREPARED FOR THE STATE OF CALIFORNIA DEPARTMENT OF TRANSPORTATION

R. Valizadeh/V. Toan/Y.L./W.L./F.C.
DESIGN OVERSIGHT
SIGN OFF DATE 04/09/10

R. Manzanarez
PROJECT ENGINEER

BRIDGE NO. 34-0006L/R
KILOMETER POST 13.2/13.9

SAN FRANCISCO OAKLAND BAY BRIDGE
EAST SPAN SEISMIC SAFETY PROJECT
SELF-ANCHORED SUSPENSION BRIDGE
(SUPERSTRUCTURE & TOWER)

FLOORBEAM AT EAST TRANSITION NO. 11

Rev. Date: 5-18-98

ORIGINAL SCALE IN MILLIMETERS FOR REDUCED PLANS 0 10 20 30 40 50 60 70 80 90 100

CU 04
EA 0120F1

DISREGARD PRINTS BEARING EARLIER REVISION DATES →

REVISION DATES (PRELIMINARY STAGE ONLY): 04/09/10

SHEET 297 OF 51

FILE => I:\bb\04-0120I\sas\contract plans and cco\cco\cco#120\1-original 04-09-10\dgn\agefd06asl.dgn

100% PS&E
USERNAME => orivera DATE PLOTTED => 09 APR 2010 TIME PLOTTED => 14:25:38

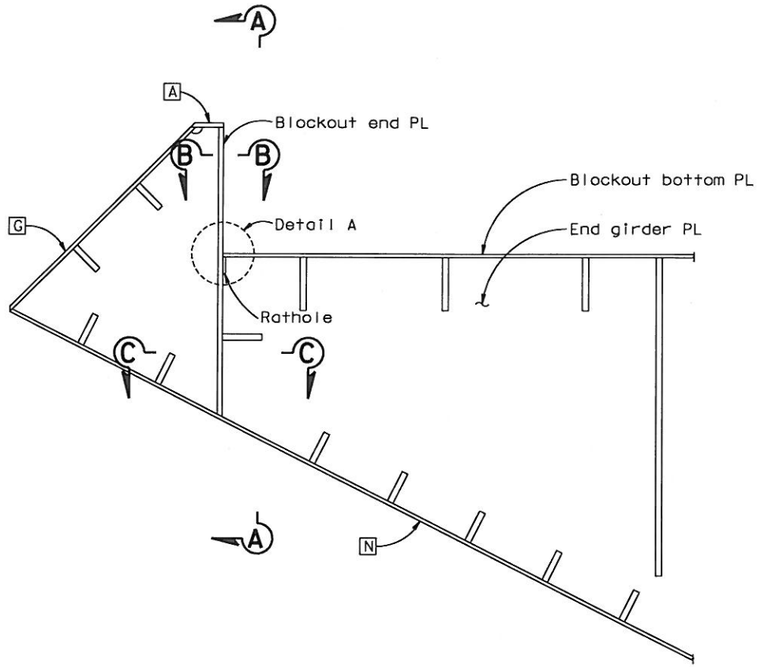

PARTIAL FLOORBEAM WEB @ PP128.7-160 (Looking East)

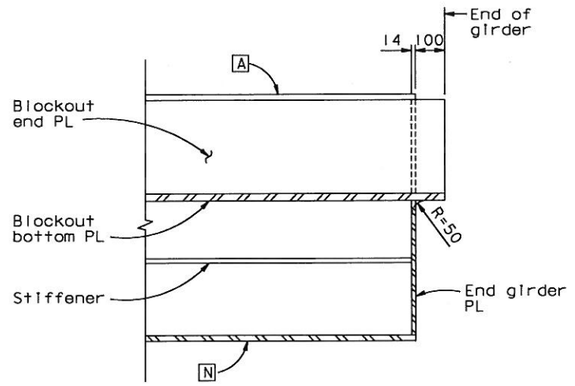

SECTION A-A
1:10

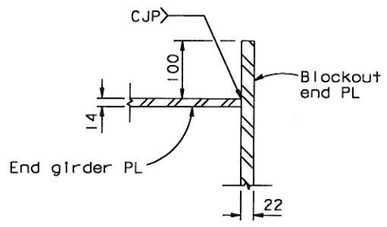

SECTION B-B
1:5

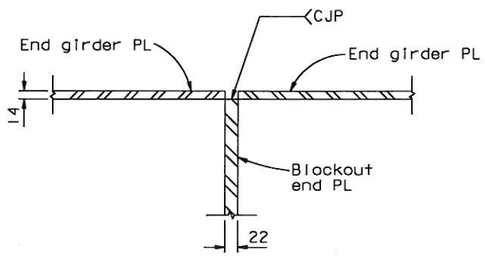

SECTION C-C
1:5

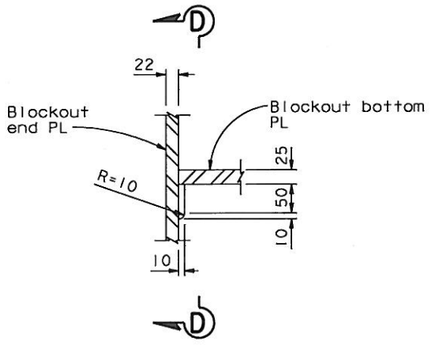

DETAIL A
1:5

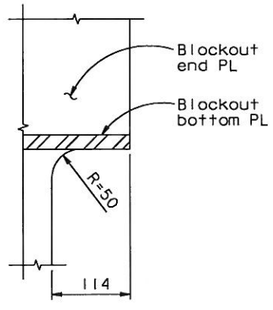

SECTION D-D (End girder PL not shown for clarity)
1:5

Caltrans Metric

DIST.	COUNTY	ROUTE	KILOMETER POST TOTAL PROJECT	SHEET NO.	TOTAL SHEETS
04	SF	80	13.2/13.9	71452	1204

REGISTERED ENGINEER - CIVIL

Marwan N. Nader
No. C 054426
Exp. 12/31/11
CIVIL
REGISTERED PROFESSIONAL ENGINEER
STATE OF CALIFORNIA

04-09-10
PLANS APPROVAL DATE

The State of California or its officers or agents shall not be responsible for the accuracy or completeness of electronic copies of this plan sheet.

T.Y. LIN / MOFFATT & NICHOL
825 BATTERY STREET
SAN FRANCISCO, CA 94111

Caltrans now has a web site! To get to the web site, go to: http://www.dot.ca.gov

CONTRACT CHANGE ORDER NO. 120
SHEET 11 OF 23

REQUESTS FOR INFORMATION NOT ADDRESSED IN THIS CCO REMAIN IN FORCE

ALL DIMENSIONS ARE IN MILLIMETERS UNLESS OTHERWISE SHOWN

R. Vallzadeh/V. Toan/Y.L./W.L./F.C.
DESIGN OVERSIGHT
SIGN OFF DATE 04/09/10

MARK	DATE	REVISIONS	BY	CH'D	CCO#
0	04/09/10	HINGE A MODIFICATION	SS	MN	120

	BY	CHECKED
DESIGN	S. Shi	M. Nader
DETAILS	S. Shi	M. Nader
QUANTITIES	S. Shi	M. Nader

PREPARED FOR THE STATE OF CALIFORNIA DEPARTMENT OF TRANSPORTATION

R. Manzanarez
PROJECT ENGINEER

BRIDGE NO. 34-0006L/R
KILOMETER POST 13.2/13.9

SAN FRANCISCO OAKLAND BAY BRIDGE
EAST SPAN SEISMIC SAFETY PROJECT
SELF-ANCHORED SUSPENSION BRIDGE
(SUPERSTRUCTURE & TOWER)

FLOORBEAM AT EAST TRANSITION NO. 12

Rev. Date: 5-18-98

ORIGINAL SCALE IN MILLIMETERS FOR REDUCED PLANS 0 10 20 30 40 50 60 70 80 90 100

CU 04
EA 0120F1

DISREGARD PRINTS BEARING EARLIER REVISION DATES →

REVISION DATES (PRELIMINARY STAGE ONLY): 04/09/10

SHEET 29752 OF

FILE => I:\bb\04-01200I\sas\contract plans and cco\cco\cco#120\I-original 04-09-10\dgn\agefd06b.dgn

100% PS&E

USERNAME => crivero DATE PLOTTED => 09 APR 2010 TIME PLOTTED => 14:26:22

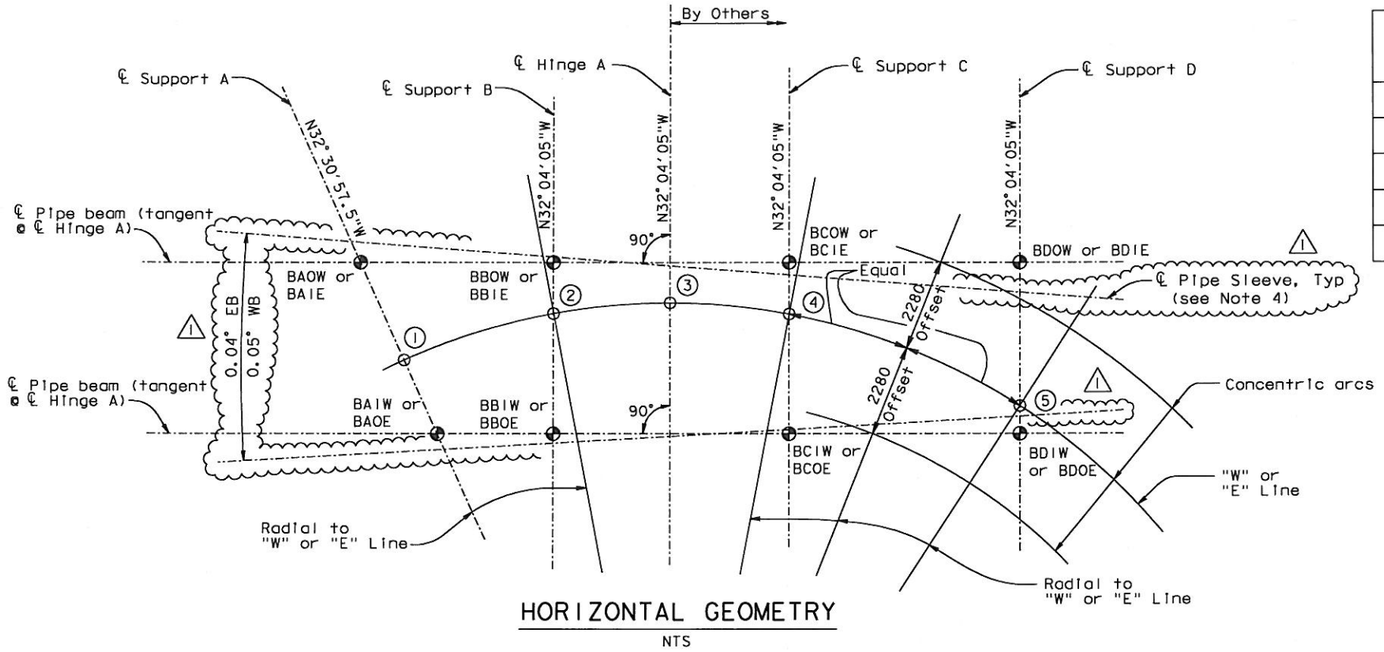

HORIZONTAL GEOMETRY

NTS

Point	Station along	
	"E" Line	"W" Line
1	61+93.378	62+03.770
2	61+98.598	62+09.295
3	62+01.688	62+12.385
4	62+04.783	62+15.480
5	62+09.996	62+21.090

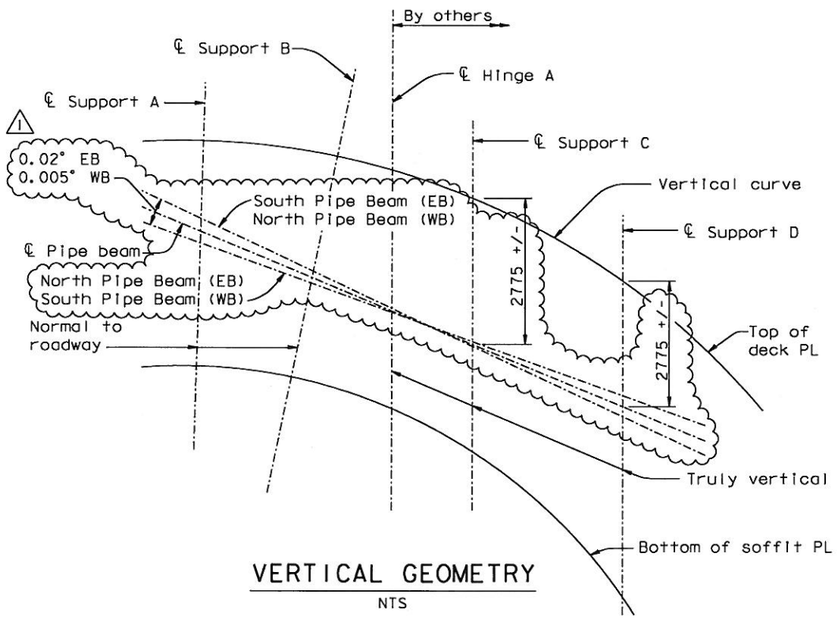

VERTICAL GEOMETRY

NTS

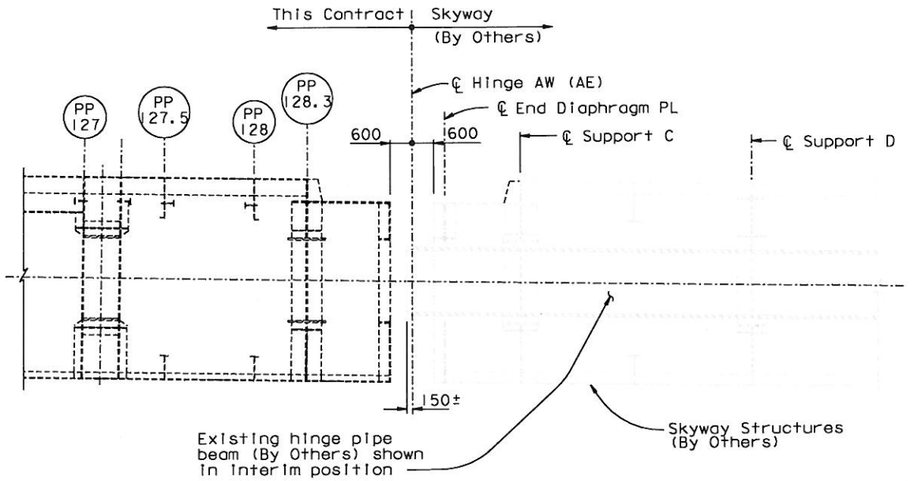

HINGE A

NTS

4. As-built pipe sleeve shown for Skyway. As-detailed pipe sleeve shown for SAS.

ALL DIMENSIONS ARE IN MILLIMETERS UNLESS OTHERWISE SHOWN

CONTRACT CHANGE ORDER NO. 120
SHEET 12 OF 23

REQUESTS FOR INFORMATION NOT ADDRESSED IN THIS CCO REMAIN IN FORCE

Caltrans Metric

DIST.	COUNTY	ROUTE	KILOMETER POST TOTAL PROJECT	SHEET NO.	TOTAL SHEETS
04	SF	80	13.2/13.9	849RI	1204

REGISTERED ENGINEER - CIVIL

12-6-04
PLANS APPROVAL DATE

REGISTERED PROFESSIONAL ENGINEER — Marwan N. Nader — No. C 054426 — Exp. 12/31/11 — CIVIL — STATE OF CALIFORNIA

The State of California or its officers or agents shall not be responsible for the accuracy or completeness of electronic copies of this plan sheet.

T.Y. LIN / MOFFATT & NICHOL
825 BATTERY STREET
SAN FRANCISCO, CA 94111

Caltrans now has a web site! To get to the web site, go to: http://www.dot.ca.gov

Scope of Work on the Interface at Hinge A

The division on the items of work between the Self-Anchored Suspension Bridge (SAS) Contractor and Others:

1. Circular Segmented Bearings Type IV and III at Hinge Diaphragm A and B, respectively, on the main span:

   1.1 Furnish and Store, (Others).
   1.2 Install (SAS Contractor). Provide shims as required.

2. Circular Segmented Bearings Type II and I at Hinge Diaphragm C and D, respectively, on the Skyway:

   2.1 Furnish and Install without final adjustment, (Others).
   2.2 Adjust and shim (SAS Contractor).

3. Hinge Pipe Beams (Including restraint brackets):

   3.1 Furnish and Temporarily Support in Interim position, (Others).
   3.2 Install in final position (SAS Contractor).

4. Movement Joint Seal Assembly:

   4.1 Furnish and Install (SAS Contractor).

LEGEND:

Hinge Bearing Support Location

Identification Key

B A O W
- W — Westbound/Eastbound
- O — Outboard/Inboard
- A — Support A/B/C/D
- B — Bearing

NOTES:

1. For vertical curve data and highway alignment, see "Deck Contours" sheets.
2. Structures East of Hinge A are built under another contract. The Contractor shall verify all controlling field dimensions before ordering or fabricating any material, or developing related shop drawings.
3. For "Hinge A Geometry Layout" sheets, the Contractor shall verify all controlling field dimensions before ordering or fabricating any material. See also "Construction Sequence No.1" sheet.

100% PS&E

MARK	DATE	DESCRIPTIONS	BY	CH'D	CCO#
1	07/30/10	HINGE A MODIFICATIONS	MN	NV	120

REVISIONS

	BY	CHECKED
DESIGN	M. Nader	N. Vo
DETAILS	G. Baker	N. Vo
QUANTITIES	G. Baker	N. Vo

PREPARED FOR THE STATE OF CALIFORNIA DEPARTMENT OF TRANSPORTATION

R. Manzanarez
PROJECT ENGINEER

R. Vaziadeh/V. Toan/Y.L./W.L./F.C.
DESIGN OVERSIGHT
SIGN OFF DATE 07/30/10

Rev. Date: 5-18-98

ORIGINAL SCALE IN MILLIMETERS FOR REDUCED PLANS 0 10 20 30 40 50 60 70 80 90 100

CU 04
EA 0120F1

FILE => I:\bb\04-01200I\sas\contract plans and cco\cco\cco#120\2-revsion 07-30-10\dgn\ahhng01a.dgn

BRIDGE NO. 34-0006L/R
KILOMETER POST 13.2/13.9

SAN FRANCISCO OAKLAND BAY BRIDGE
EAST SPAN SEISMIC SAFETY PROJECT
SELF-ANCHORED SUSPENSION BRIDGE (SUPERSTRUCTURE & TOWER)

HINGE A GEOMETRY LAYOUT NO. 1

DISREGARD PRINTS BEARING EARLIER REVISION DATES

REVISION DATES (PRELIMINARY STAGE ONLY): 01/30/02 07/29/02 12/27/02 05/06/04

SHEET 432RI OF

USERNAME => dwinrow DATE PLOTTED => 30 JUL 2010 TIME PLOTTED => 10:58:38

DIST.	COUNTY	ROUTE	KILOMETER POST TOTAL PROJECT	SHEET NO.	TOTAL SHEETS
04	SF	80	13.2/13.9	850R1	1204

REGISTERED ENGINEER - CIVIL

12-6-04

PLANS APPROVAL DATE

REGISTERED PROFESSIONAL ENGINEER Marwan N Nader No. C054426 Exp. 12/31/11 CIVIL STATE OF CALIFORNIA

The State of California or its officers or agents shall not be responsible for the accuracy or completeness of electronic copies of this plan sheets.

T.Y. LIN / MOFFATT & NICHOL
825 BATTERY STREET
SAN FRANCISCO, CA 94111

Caltrans now has a web site! To get to the web site, go to: http://www.dot.ca.gov

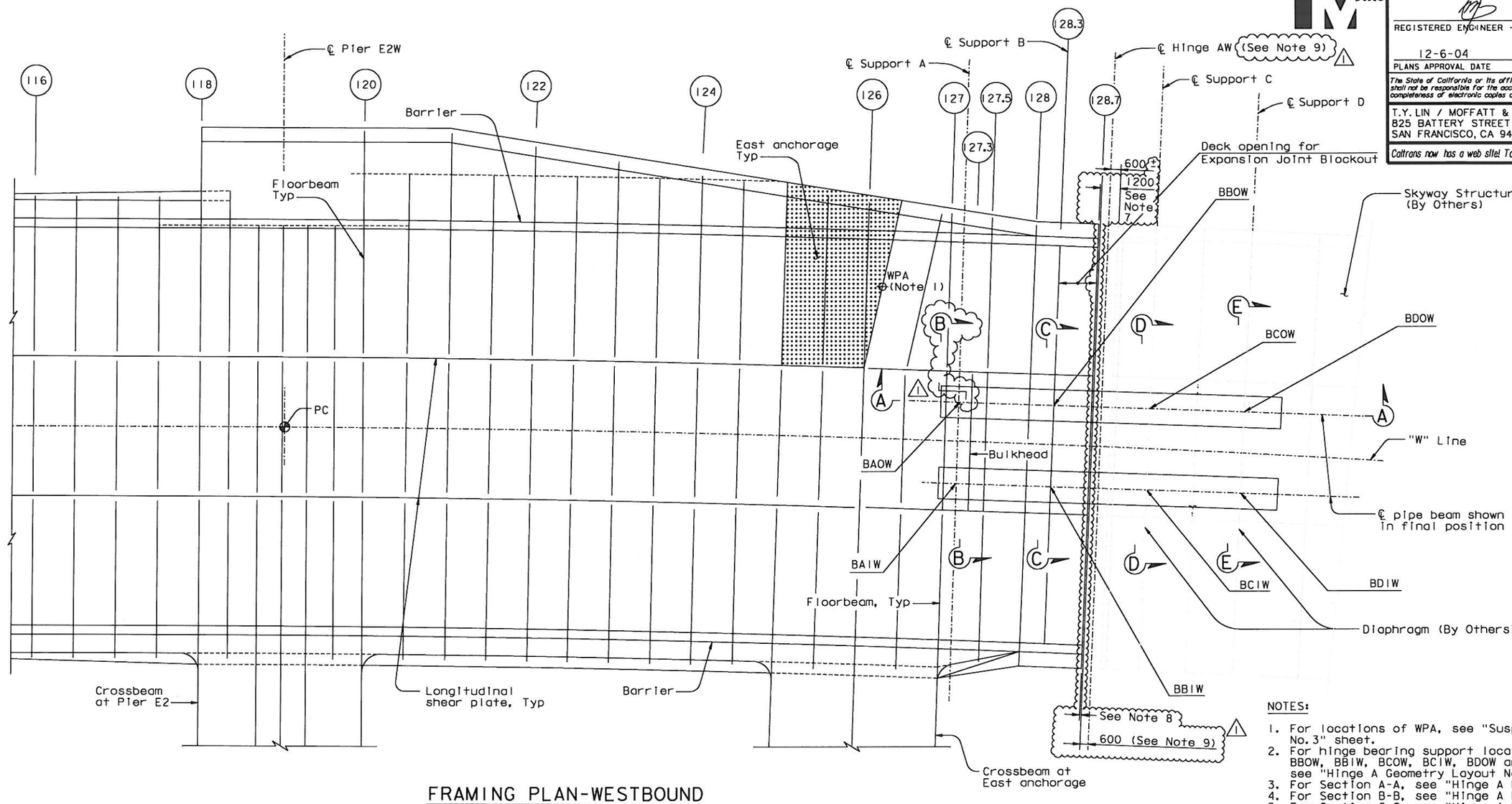

FRAMING PLAN-WESTBOUND

1:125

NOTES:

1. For locations of WPA, see "Suspension Cable Layout No. 3" sheet.
2. For hinge bearing support locations BAOW, BAIW, BBOW, BBIW, BCOW, BCIW, BDOW and BDIW, see "Hinge A Geometry Layout No. 1" sheet.
3. For Section A-A, see "Hinge A Details No. 1" sheet.
4. For Section B-B, see "Hinge A Details No. 2" sheet.
5. For Section C-C, see "Hinge A Details No. 3" sheet.
6. For Sections D-D and E-E, see "Hinge A Details No. 4" sheet.
7. The as-built gap at Hinge A shall be 1200 minimum. The limit of the concrete blockout shall be adjusted based on the field conditions of the Skyway.
8. The limit of the girder shall be taken as 160 mm west of the theoretical location of PP 128.7.
9. The Hinge A Centerline and PP 128.7 shall be taken from "Hinge A Geometry Layout No. 1" sheet.

CONTRACT CHANGE ORDER NO. 120
SHEET 13 OF 23

REQUESTS FOR INFORMATION NOT ADDRESSED IN THIS CCO REMAIN IN FORCE

ALL DIMENSIONS ARE IN MILLIMETERS UNLESS OTHERWISE SHOWN

R. Valizadeh/V. Toan/Y.L./W.L./F.C.
DESIGN OVERSIGHT
Roger Valizadeh / Vong Toan / Y Liu
SIGN OFF DATE 08/05/10

MARK	DATE	DESCRIPTIONS	BY	CH'D	CCO#
1	08/05/10	HINGE A MODIFICATIONS	MN	GB	120

REVISIONS

DESIGN	BY M. Nader	CHECKED N. Vo	
DETAILS	BY G. Baker	CHECKED N. Vo	
QUANTITIES	BY G. Baker	CHECKED N. Vo	

PREPARED FOR THE STATE OF CALIFORNIA DEPARTMENT OF TRANSPORTATION

R. Manzanarez
PROJECT ENGINEER

BRIDGE NO. 34-0006L/R
KILOMETER POST 13.2/13.9

SAN FRANCISCO OAKLAND BAY BRIDGE
EAST SPAN SEISMIC SAFETY PROJECT
SELF-ANCHORED SUSPENSION BRIDGE
(SUPERSTRUCTURE & TOWER)

HINGE A GEOMETRY LAYOUT NO. 2

Rev. Date: 5-18-98

ORIGINAL SCALE IN MILLIMETERS FOR REDUCED PLANS 0 10 20 30 40 50 60 70 80 90 100

CU 04
EA 0120F1

DISREGARD PRINTS BEARING EARLIER REVISION DATES

REVISION DATES (PRELIMINARY STAGE ONLY) 01/15/99 08/02/99 05/31/01 04/08/02 07/01/02 12/19/02

SHEET 433R1 OF

FILE => L:\BB\04-012001\SAS\Contract Plans and CCO\CCO\CCO#120\3-Update 08-05-10\DGN\ahhng01w.dgn

100 % PS&E

USERNAME => dwinrow DATE PLOTTED => 05 AUG 2010 TIME PLOTTED => 13:23:02

DIST.	COUNTY	ROUTE	KILOMETER POST TOTAL PROJECT	SHEET NO.	TOTAL SHEETS
04	SF	80	13.2/13.9	851R1	1204

REGISTERED ENGINEER - CIVIL

12-6-04
PLANS APPROVAL DATE

REGISTERED PROFESSIONAL ENGINEER
Marwan N Nader
No. C054426
Exp. 12/31/11
CIVIL
STATE OF CALIFORNIA

The State of California or its officers or agents shall not be responsible for the accuracy or completeness of electronic copies of this plan sheet.

T.Y. LIN / MOFFATT & NICHOL
825 BATTERY STREET
SAN FRANCISCO, CA 94111

Caltrans now has a web site! To get to the web site, go to: http://www.dot.ca.gov

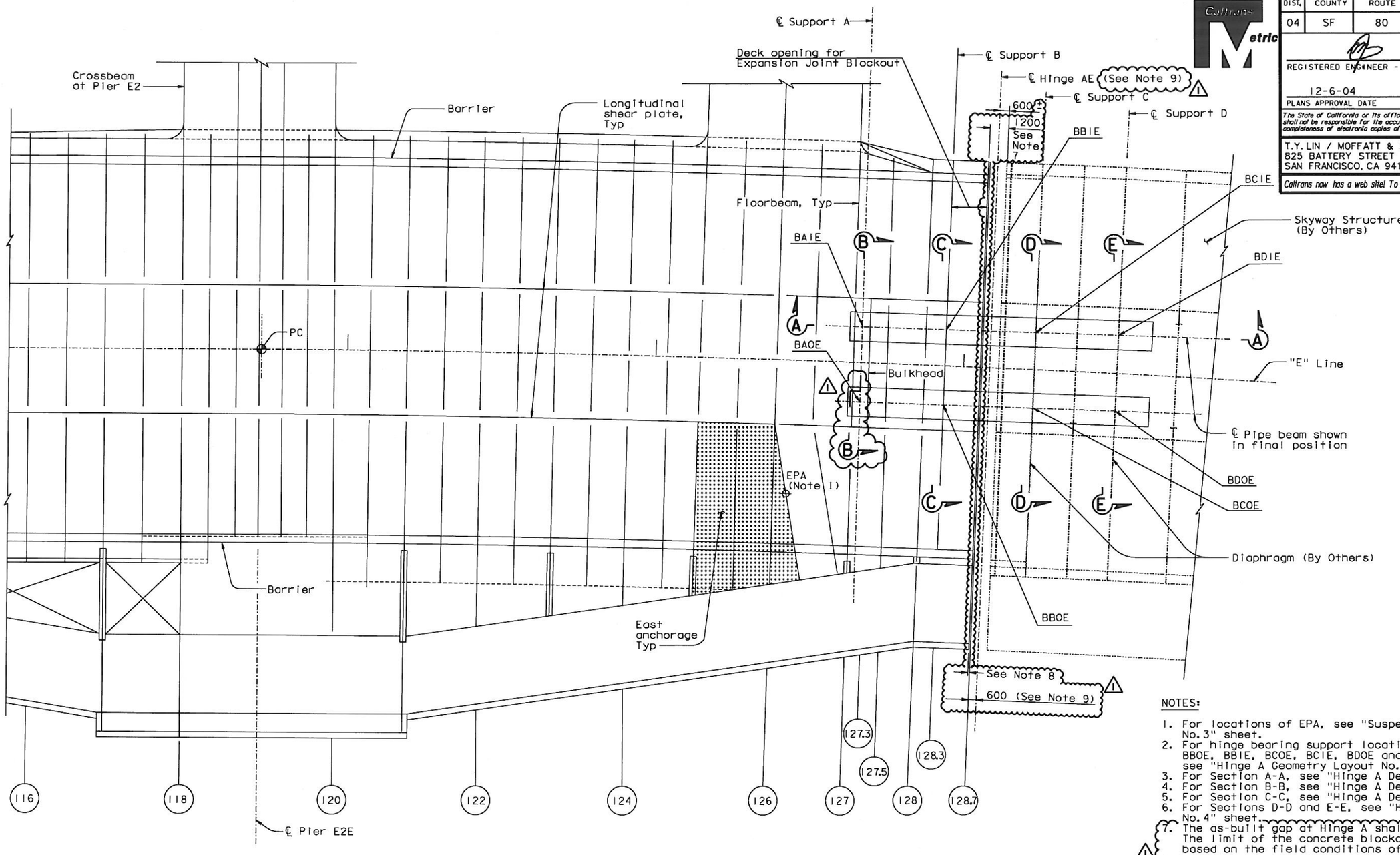

NOTES:

1. For locations of EPA, see "Suspension Cable Layout No. 3" sheet.
2. For hinge bearing support locations BAOE, BAIE, BBOE, BBIE, BCOE, BCIE, BDOE and BDIE, see "Hinge A Geometry Layout No. 1" sheet.
3. For Section A-A, see "Hinge A Details No. 1" sheet.
4. For Section B-B, see "Hinge A Details No. 2" sheet.
5. For Section C-C, see "Hinge A Details No. 3" sheet.
6. For Sections D-D and E-E, see "Hinge A Details No. 4" sheet.
7. The as-built gap at Hinge A shall be 1200 minimum. The limit of the concrete blockout shall be adjusted based on the field conditions of the Skyway.
8. The limit of the girder shall be taken as 160 mm west of the theoretical location of PP 128.7.
9. The Hinge A Centerline and PP 128.7 shall be taken from "Hinge A Geometry Layout No. 1" sheet.

FRAMING PLAN-EASTBOUND

1:125

CONTRACT CHANGE ORDER NO. 120
SHEET 14 OF 23

REQUESTS FOR INFORMATION NOT ADDRESSED IN THIS CCO REMAIN IN FORCE

ALL DIMENSIONS ARE IN MILLIMETERS UNLESS OTHERWISE SHOWN

SAN FRANCISCO OAKLAND BAY BRIDGE
EAST SPAN SEISMIC SAFETY PROJECT
SELF-ANCHORED SUSPENSION BRIDGE
(SUPERSTRUCTURE & TOWER)

HINGE A GEOMETRY LAYOUT NO. 3

R. Valizadeh/V. Toan/Y.L./W.L./F.C.
DESIGN OVERSIGHT
Roger Valizadeh / Vong Toan / Y Lin
SIGN OFF DATE 04/09/10

MARK	DATE	DESCRIPTIONS	BY	CH'D	CCO#
1	04/09/10	HINGE A MODIFICATIONS	MN	GB	120

REVISIONS

DESIGN	BY M. Nader	CHECKED N. Vo	
DETAILS	BY G. Baker	CHECKED N. Vo	
QUANTITIES	BY G. Baker	CHECKED N. Vo	

PREPARED FOR THE STATE OF CALIFORNIA DEPARTMENT OF TRANSPORTATION

R. Manzanarez
PROJECT ENGINEER

BRIDGE NO. 34-0006L/R
KILOMETER POST 13.2/13.9

Rev. Date: 5-18-98

ORIGINAL SCALE IN MILLIMETERS FOR REDUCED PLANS 0 10 20 30 40 50 60 70 80 90 100

CU 04
EA 0120F1

DISREGARD PRINTS BEARING EARLIER REVISION DATES

REVISION DATES (PRELIMINARY STAGE ONLY) 01/15/99 08/02/99 05/31/01 04/08/02 07/01/02 12/19/02

SHEET 434R1 OF

FILE => I:\bb\04-0120I\sas\contract plans and cco\cco\cco#120\1-original 04-09-10\dgn\ahhng01e.dgn

100 % PS&E

USERNAME => arivera DATE PLOTTED => 09 APR 2010 TIME PLOTTED => 14:32:57

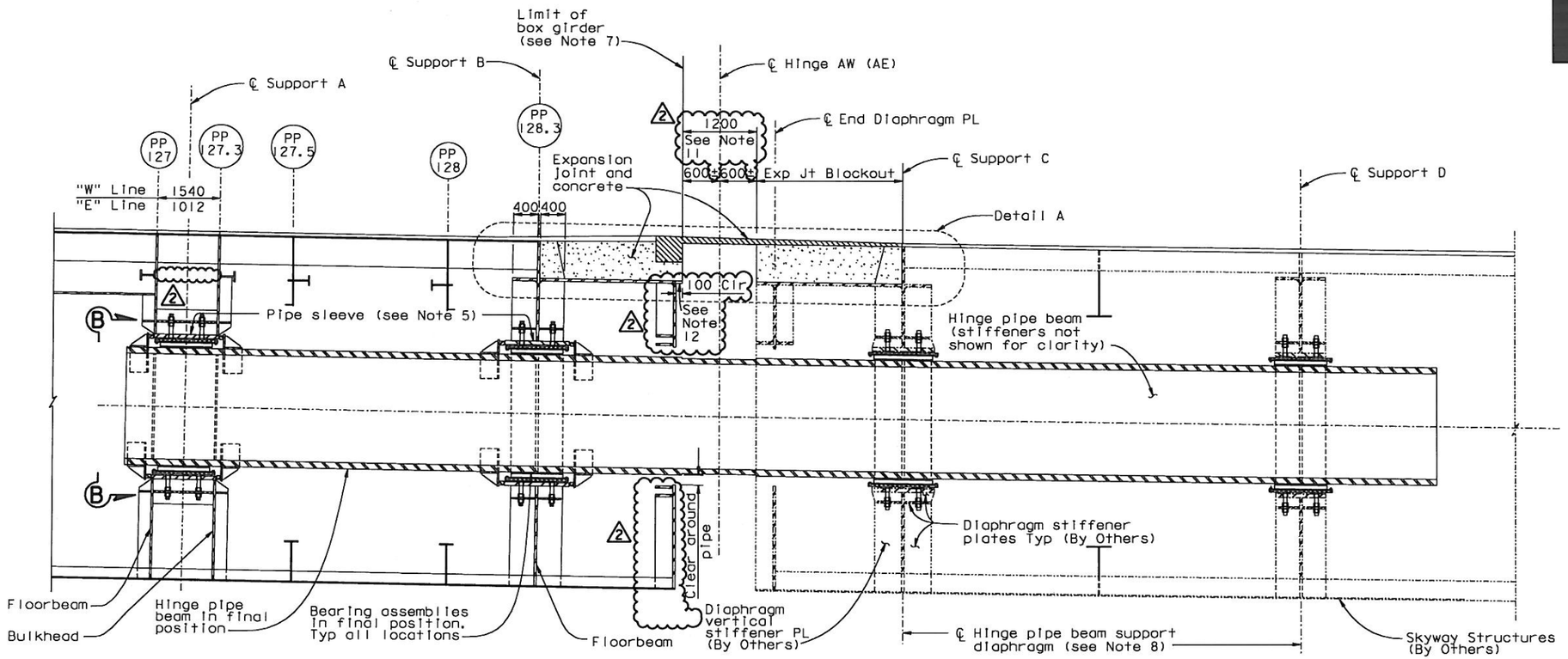

SECTION A-A
1:40

(Orientation of Expansion Joint shown for Eastbound, see Note 10)

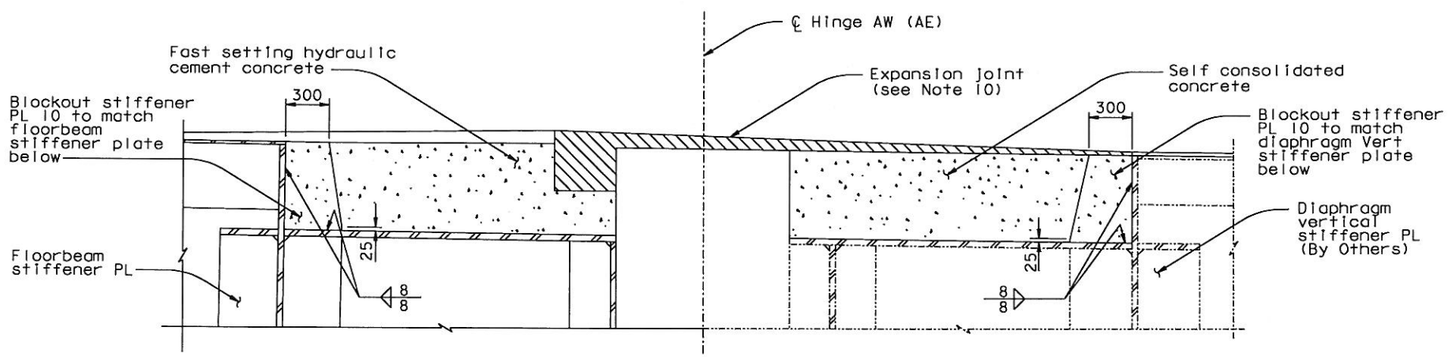

DETAIL A
1:20

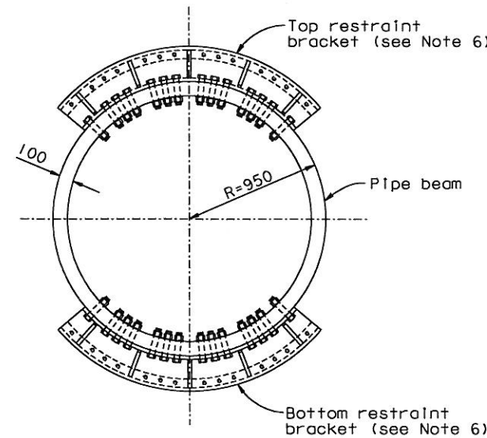

END VIEW B-B
1:20

NOTES:

1. For locations and alignment of floor beams at PP127, PP127.5 and PP128, see "Girder Framing Plan No. 4" sheet.
2. Bulkhead at PP127.3 is parallel to the floor beam at PP 127.
3. Floorbeam at PP 128.3 is parallel to ℄ Hinge A. For locations, see "Hinge A Geometry Layout" sheets.
4. For expansion joint details, see "Hinge A Expansion Joint Details" sheets.
5. Pipe sleeve shall be parallel to pipe beam.
6. For restraint bracket details, see "Hinge A Details No. 9" sheet.
7. For girder details east of PP 128.3, see "Girder At East Transition No. 8" and "Floorbeam At East Transition No. 10" sheets.
8. For hinge bearing support location, see "Hinge A Geometry Layout" sheets.
9. For "Hinge A Details" sheets, the Contractor shall verify all controlling field dimensions before ordering or fabricating any material.
10. For orientation of expansion joints, see "Seismic Joint" plans.

2 11. The as-built gap at Hinge A shall be 1200 minimum. The limit of the concrete blockout shall be adjusted based on the field conditions of the Skyway.
12. The Contractor shall trim the blockout end PL and blockout bottom PL to maintain an expansion gap of 1200 minimum.

100 % PS&E

CONTRACT CHANGE ORDER NO. 120
SHEET 15 OF 23

REQUESTS FOR INFORMATION NOT ADDRESSED IN THIS CCO REMAIN IN FORCE

ALL DIMENSIONS ARE IN MILLIMETERS UNLESS OTHERWISE SHOWN

MARK	DATE	DESCRIPTIONS	BY	CH'D	CCO#
		REVISIONS			
2	04/09/10	HINGE A MODIFICATIONS	MN	NV	120
1	11/05/08	PER CALTRANS SEISMIC JOINT MODIFICATION	MN	AS	25

DESIGN	BY M. Nader	CHECKED N. Vo
DETAILS	BY G. Baker	CHECKED N. Vo
QUANTITIES	BY G. Baker	CHECKED N. Vo

R. Vallzadeh/V. Toan/Y.L./W.L./F.C.
DESIGN OVERSIGHT
SIGN OFF DATE 04/09/10

PREPARED FOR THE STATE OF CALIFORNIA DEPARTMENT OF TRANSPORTATION

R. Manzanarez
PROJECT ENGINEER

ORIGINAL SCALE IN MILLIMETERS FOR REDUCED PLANS 0 10 20 30 40 50 60 70 80 90 100

CU 04
EA 0120F1

BRIDGE NO. 34-0006L/R
KILOMETER POST 13.2/13.9

DISREGARD PRINTS BEARING EARLIER REVISION DATES →

REVISION DATES (PRELIMINARY STAGE ONLY): 05/27/01 | 01/08/02 | 07/29/02 | 12/05/02 | 07/18/03

SHEET 435R2 OF

SAN FRANCISCO OAKLAND BAY BRIDGE
EAST SPAN SEISMIC SAFETY PROJECT
SELF-ANCHORED SUSPENSION BRIDGE (SUPERSTRUCTURE & TOWER)

HINGE A DETAILS NO. 1

Rev. Date: 5-18-98

FILE => I:\bb\04-012001\sas\contract plans and cco\cco\cco#120\1-original 04-09-10\dgn\ahhng01.dgn

USERNAME => arivera DATE PLOTTED => 09 APR 2010 TIME PLOTTED => 14:31:58

DIST.	COUNTY	ROUTE	KILOMETER POST TOTAL PROJECT	SHEET NO.	TOTAL SHEETS
04	SF	80	13.2/13.9	852R2	1204

REGISTERED ENGINEER - CIVIL
Marwan N. Nader No. C 054426 Exp. 12/31/11 CIVIL
PROFESSIONAL ENGINEER STATE OF CALIFORNIA
12-6-04
PLANS APPROVAL DATE

The State of California or its officers or agents shall not be responsible for the accuracy or completeness of electronic copies of this plan sheet.

T.Y. LIN / MOFFATT & NICHOL
825 BATTERY STREET
SAN FRANCISCO, CA 94111

Caltrans now has a web site! To get to the web site, go to: http://www.dot.ca.gov

DIST.	COUNTY	ROUTE	KILOMETER POST TOTAL PROJECT	SHEET NO.	TOTAL SHEETS
04	SF	80	13.2/13.9	853R1	1204

REGISTERED ENGINEER - CIVIL

12-6-04
PLANS APPROVAL DATE

REGISTERED PROFESSIONAL ENGINEER — Marwan N. Nader — No. C 054426 — Exp. 12/31/11 — CIVIL — STATE OF CALIFORNIA

The State of California or its officers or agents shall not be responsible for the accuracy or completeness of electronic copies of this plan sheet.

T.Y. LIN / MOFFATT & NICHOL
825 BATTERY STREET
SAN FRANCISCO, CA 94111

Caltrans now has a web site! To get to the web site, go to: http://www.dot.ca.gov

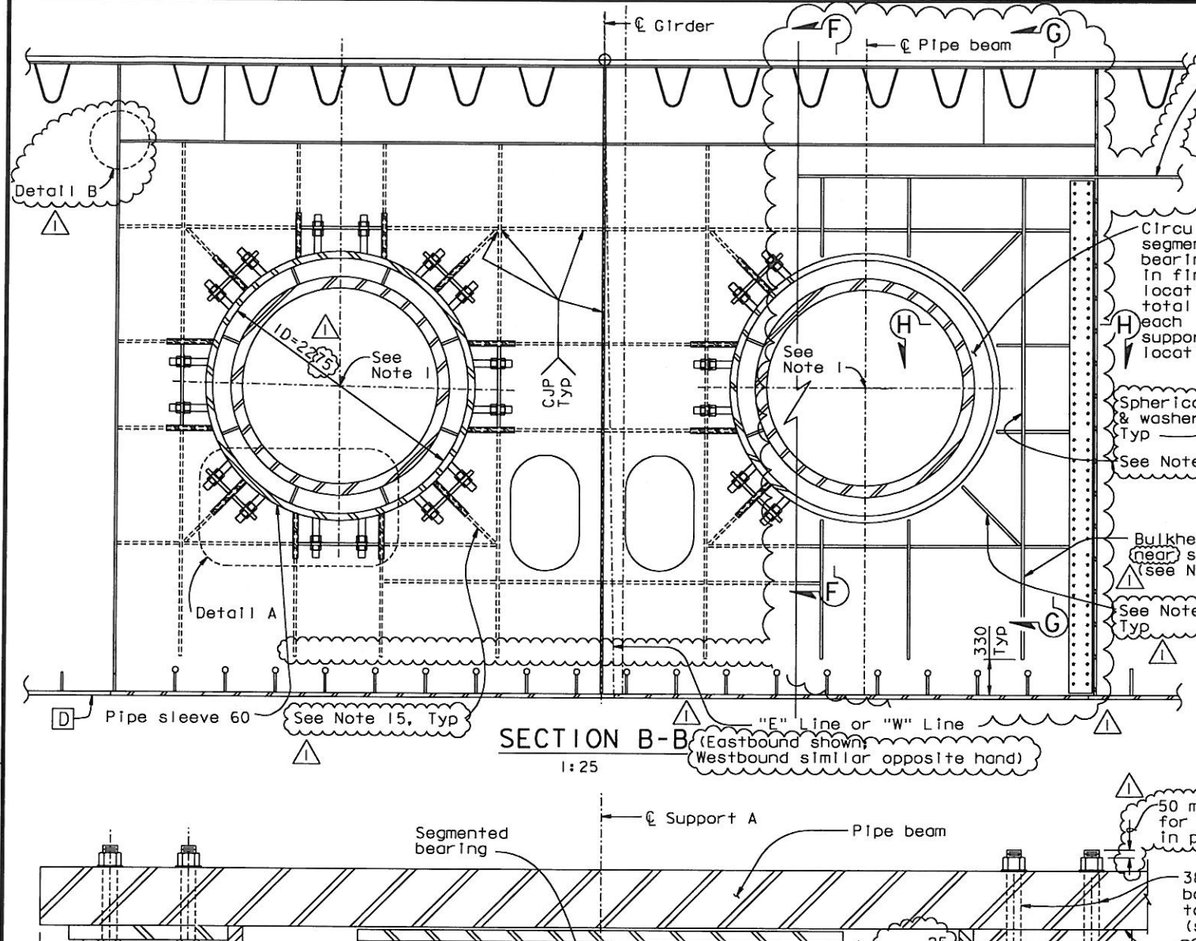

SECTION B-B
1:25

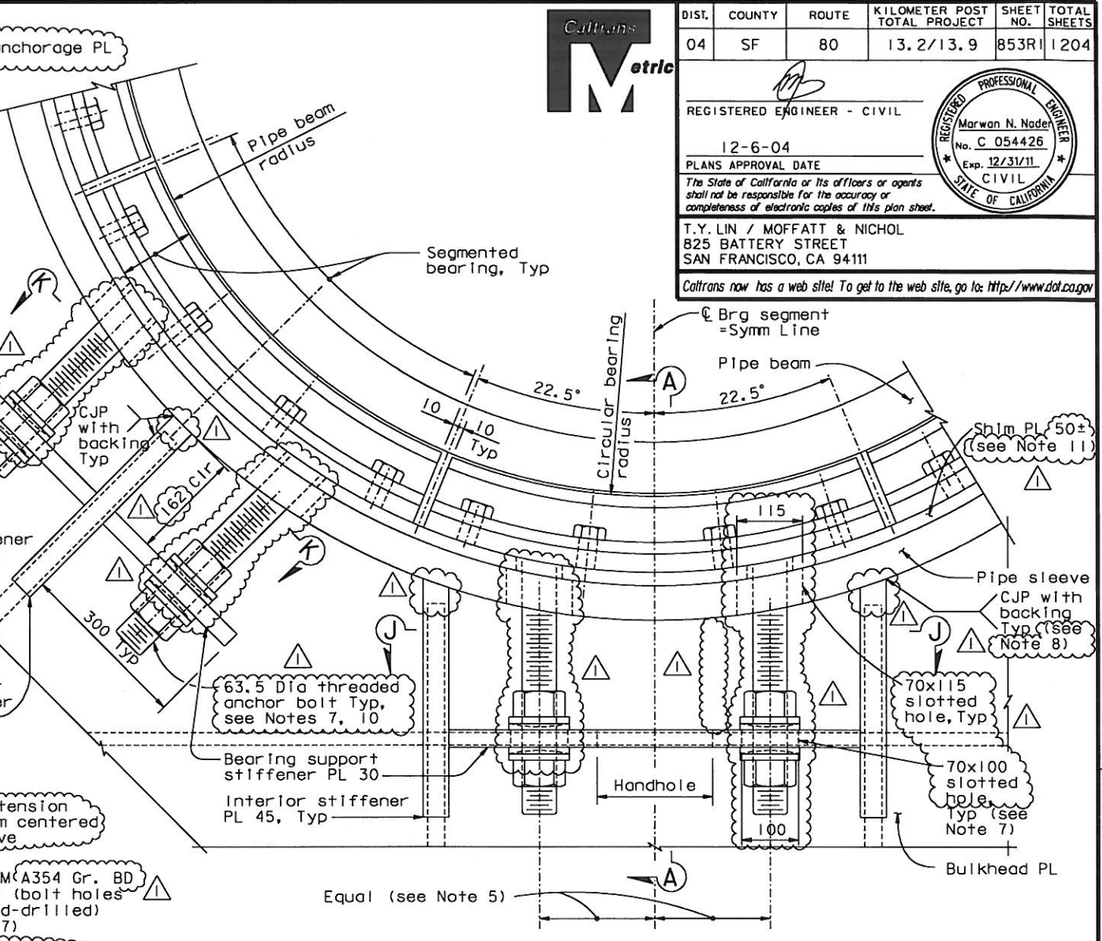

Fixed Brg Type IV (See Note 4)

DETAIL A
NTS

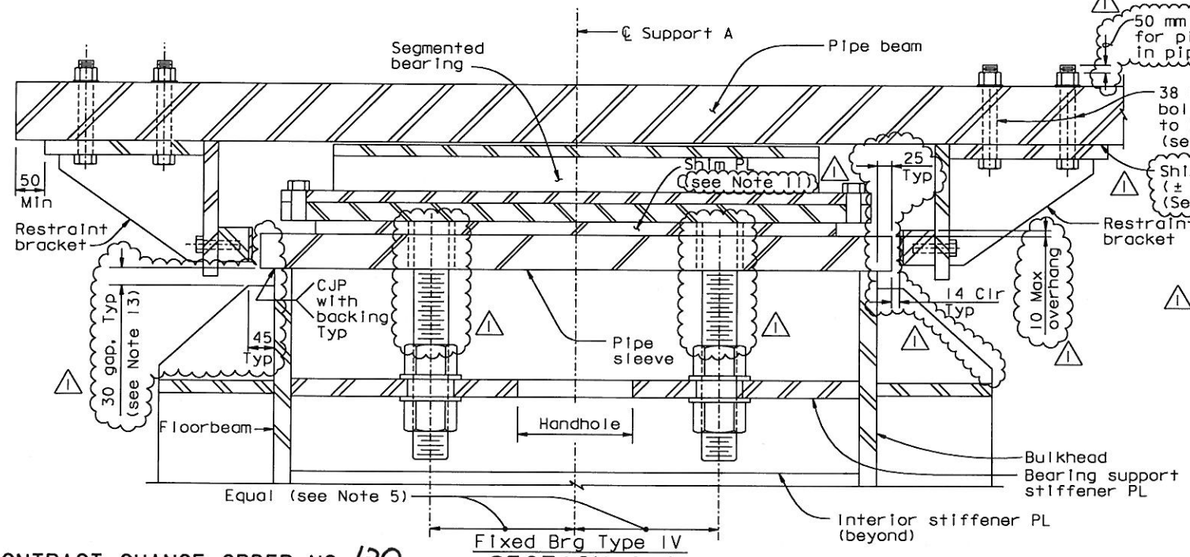

Fixed Brg Type IV
SECTION A-A
NTS

10. The Contractor shall furnish new 63.5x530 long ASTM A449 galvanized threaded rods for fixed bearing Type IV, and shall verify fit into drilled and tapped holes in existing anchor plates.
11. At the Contractor's option, the shim PL may be replaced with high strength non-shrink grout, subject to review and approval of the Engineer.
12. For Detail B, see "Hinge A Details No.2A" sheet.
13. At the Contractor's option, the PL 22x200 stiffener may be sized such that this gap is 80 mm.
14. At the Contractor's option, a CJP with backing to remain may be used in lieu of a CJP to connect the floorbeam web and vertical stiffener between the horizontal stiffeners.
15. At the Contractor's option a 16 mm double-fillet weld may be used in lieu of a CJP on diagonal stiffeners to floorbeam web between hinge pipe sleeves and vertical/horizontal stiffeners.

NOTES:

1. For locations of BAIW, BAOE, BAOW and BAIE, see "Hinge A Geometry Layout" sheets.
2. For details not shown, see "Floorbeam at East Transition No.8" sheet.
3. For Sections F-F, G-G, H-H, J-J and K-K, see "Hinge A Details No.6" sheet.
4. For fixed bearing Type IV, see "Hinge A Details No.7" sheet.
5. Verify bearing anchor bolt spacing before drilling oversize bolt holes.
6. Note Deleted.
7. The bolt sizes shown correspond to US Standard bolt sizes.
8. Profile cut stiffeners to match surface of pipe sleeve.
9. Shim as required to align restrainer bracket bearing pad with pipe sleeve.

CONTRACT CHANGE ORDER NO. 120
SHEET 16 OF 23

REQUESTS FOR INFORMATION NOT ADDRESSED IN THIS CCO REMAIN IN FORCE

ALL DIMENSIONS ARE IN MILLIMETERS UNLESS OTHERWISE SHOWN

MARK	DATE	DESCRIPTIONS	BY	CH'D	CCO#
1	07/30/10	HINGE A MODIFICATIONS	MN	NV	120

REVISIONS

	BY	CHECKED
DESIGN	M. Nader	N. Vo
DETAILS	G. Baker	N. Vo
QUANTITIES	G. Baker	N. Vo

PREPARED FOR THE STATE OF CALIFORNIA
DEPARTMENT OF TRANSPORTATION

R. Manzanarez
PROJECT ENGINEER

BRIDGE NO. 34-0006L/R
KILOMETER POST 13.2/13.9

SAN FRANCISCO OAKLAND BAY BRIDGE
EAST SPAN SEISMIC SAFETY PROJECT
SELF-ANCHORED SUSPENSION BRIDGE (SUPERSTRUCTURE & TOWER)

HINGE A DETAILS NO. 2

R. Vallizadeh/V. Toan/Y.L./W.L./F.C.
DESIGN OVERSIGHT
SIGN OFF DATE 07/30/10

Rev. Date: 5-18-98

ORIGINAL SCALE IN MILLIMETERS FOR REDUCED PLANS 0 10 20 30 40 50 60 70 80 90 100

CU 04
EA 0120F1

DISREGARD PRINTS BEARING EARLIER REVISION DATES →

REVISION DATES (PRELIMINARY STAGE ONLY): 05/07/09 | 05/14/10 | 06/25/10 | 07/30/10 | 12/15/10 | 11/15/05

SHEET 436R1 OF

USERNAME => dwinrow
DATE PLOTTED => 30 JUL 2010
TIME PLOTTED => 11:00:21
100 % PS&E

FILE => I:\bb\04-012001\sas\contract plans and cco\cco\cco#120\2-revsion 07-30-10\dgn\ahhng02.dgn

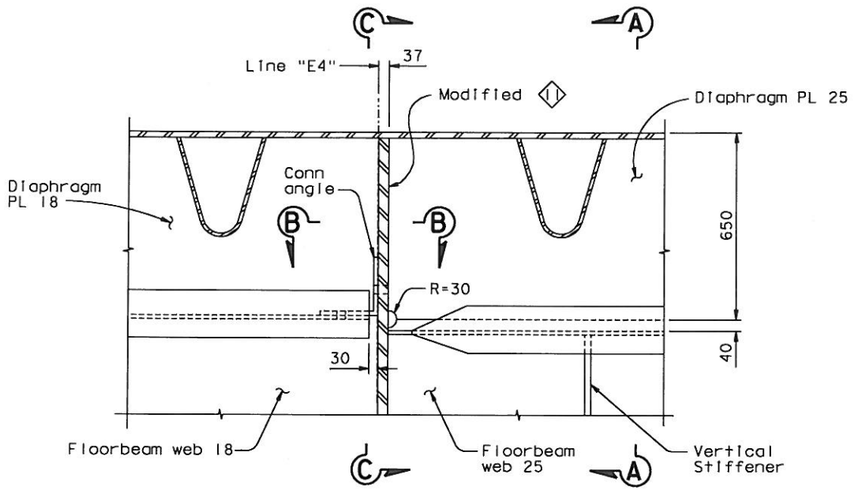

DETAIL B (Shown at west face of floorbeam at PP127)
1:10

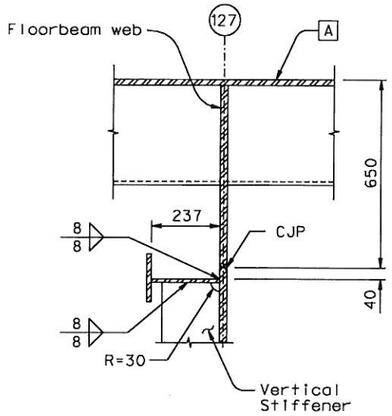

SECTION A-A
1:5

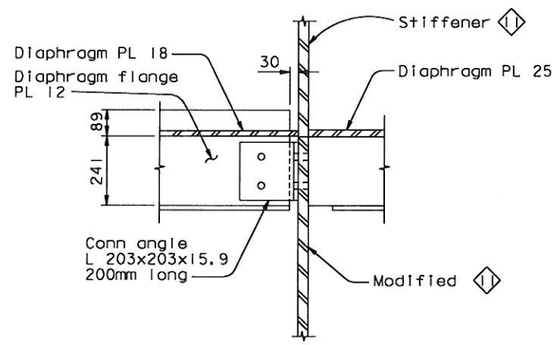

SECTION B-B
1:5

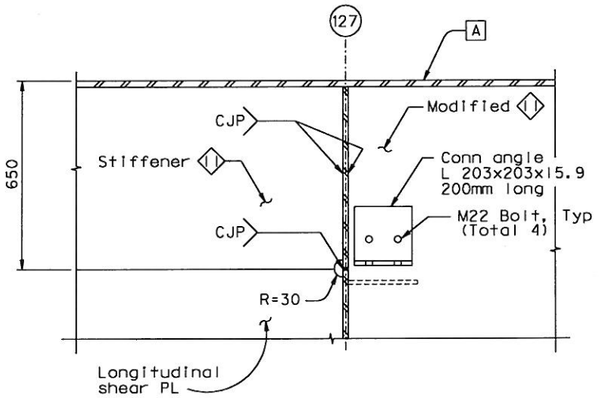

SECTION C-C
1:5

CONTRACT CHANGE ORDER NO. 120
SHEET 17 OF 23

REQUESTS FOR INFORMATION NOT ADDRESSED IN THIS CCO REMAIN IN FORCE

ALL DIMENSIONS ARE IN MILLIMETERS UNLESS OTHERWISE SHOWN

DIST.	COUNTY	ROUTE	KILOMETER POST TOTAL PROJECT	SHEET NO.	TOTAL SHEETS
04	SF	80	13.2/13.9	853S1	1204

Caltrans Metric

REGISTERED ENGINEER - CIVIL

04-09-10
PLANS APPROVAL DATE

REGISTERED PROFESSIONAL ENGINEER — Marwan N. Nader — No. C 054426 — Exp. 12/31/11 — CIVIL — STATE OF CALIFORNIA

The State of California or its officers or agents shall not be responsible for the accuracy or completeness of electronic copies of this plan sheet.

T.Y. LIN / MOFFATT & NICHOL
825 BATTERY STREET
SAN FRANCISCO, CA 94111

Caltrans now has a web site! To get to the web site, go to: http://www.dot.ca.gov

R. Vallizadeh/V. Toan/Y.L./W.L./F.C.
DESIGN OVERSIGHT
SIGN OFF DATE 04/09/10

MARK	DATE	DESCRIPTIONS	BY	CH'D	CCO#
0	04/09/10	HINGE A MODIFICATIONS	SS	MN	120

REVISIONS

	BY	CHECKED
DESIGN	S. Shi	M. Nader
DETAILS	S. Shi	M. Nader
QUANTITIES	S. Shi	M. Nader

PREPARED FOR THE STATE OF CALIFORNIA DEPARTMENT OF TRANSPORTATION

R. Manzanarez
PROJECT ENGINEER

CU 04
EA 0120F1

BRIDGE NO. 34-0006L/R
KILOMETER POST 13.2/13.9

SAN FRANCISCO OAKLAND BAY BRIDGE
EAST SPAN SEISMIC SAFETY PROJECT
SELF-ANCHORED SUSPENSION BRIDGE
(SUPERSTRUCTURE & TOWER)

HINGE A DETAILS NO. 2A

DISREGARD PRINTS BEARING EARLIER REVISION DATES →
REVISION DATES (PRELIMINARY STAGE ONLY): 04/09/10
SHEET 436S1 OF

Rev. Date: 5-18-98

ORIGINAL SCALE IN MILLIMETERS FOR REDUCED PLANS 0 10 20 30 40 50 60 70 80 90 100

FILE => I:\bb\04-0120I\sas\contract plans and cco\cco\cco#120\1-original 04-09-10\dgn\ahhng02a.dgn

100 % PS&E

USERNAME => arivera DATE PLOTTED => 09 APR 2010 TIME PLOTTED => 14:34:59

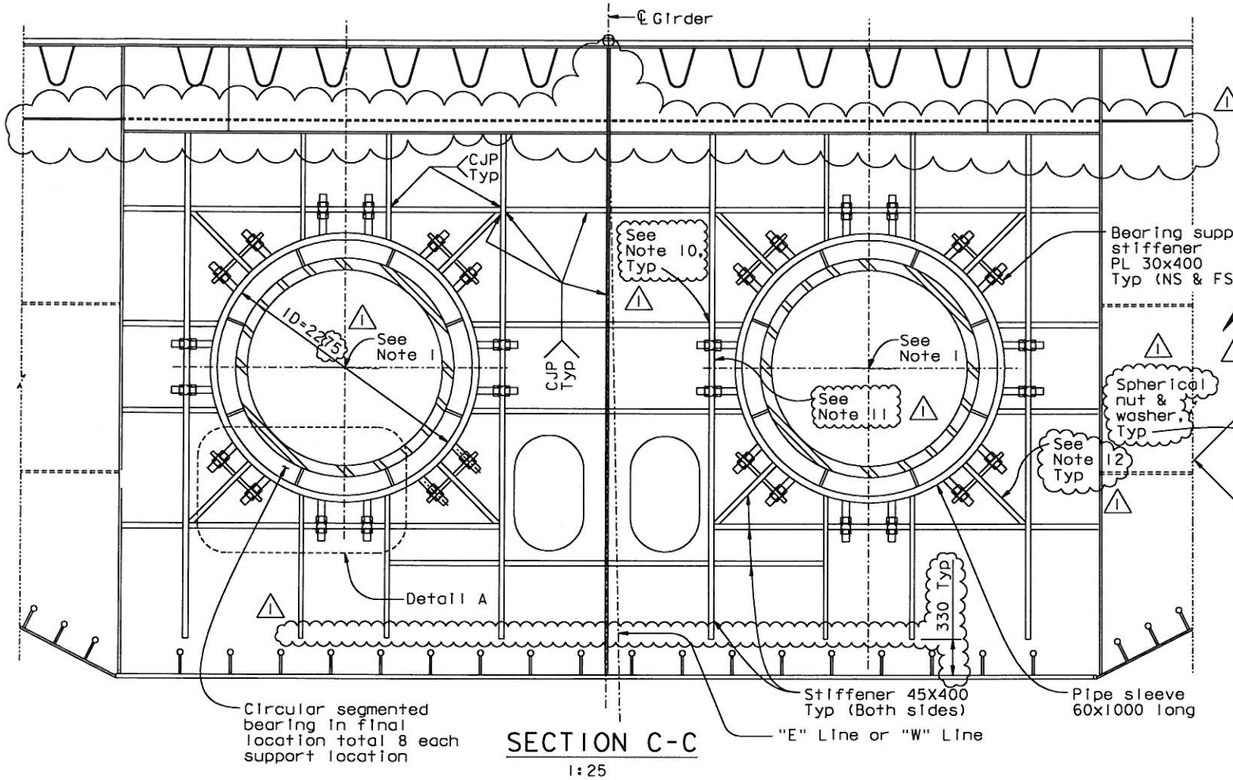

SECTION C-C
1:25

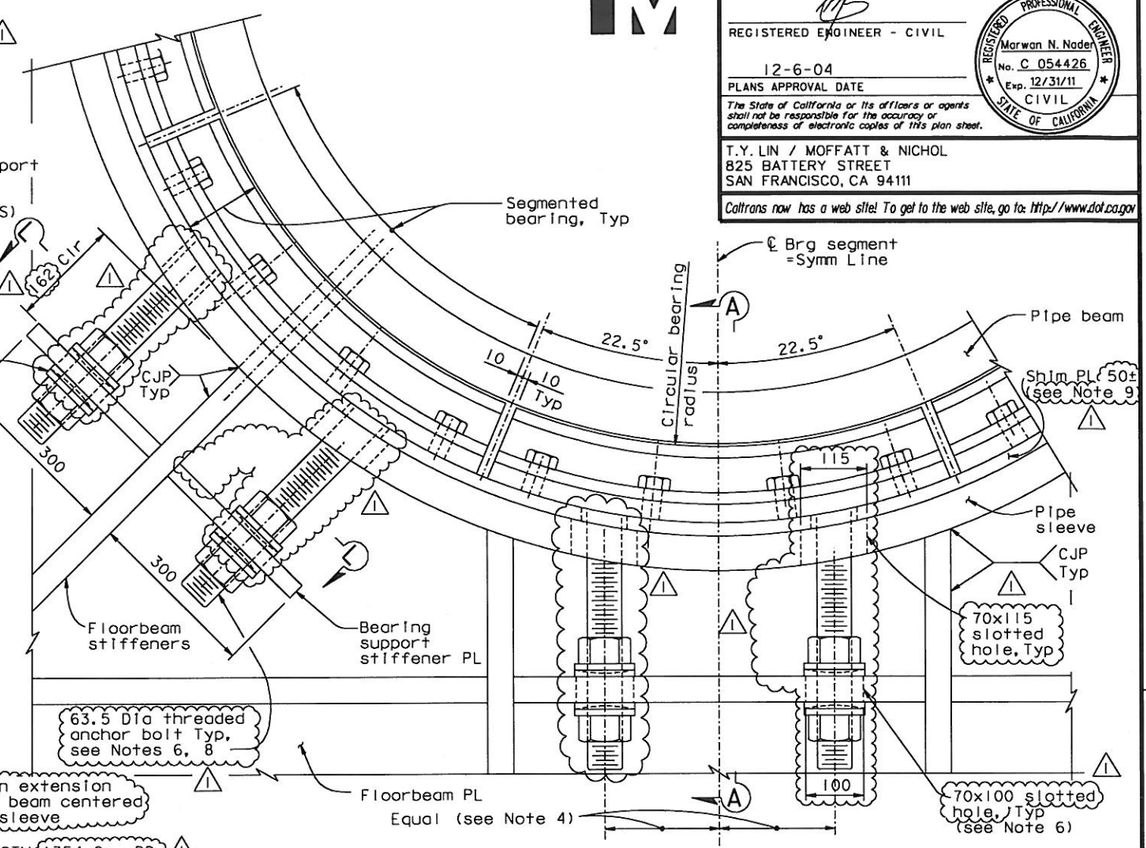

DETAIL A
NTS

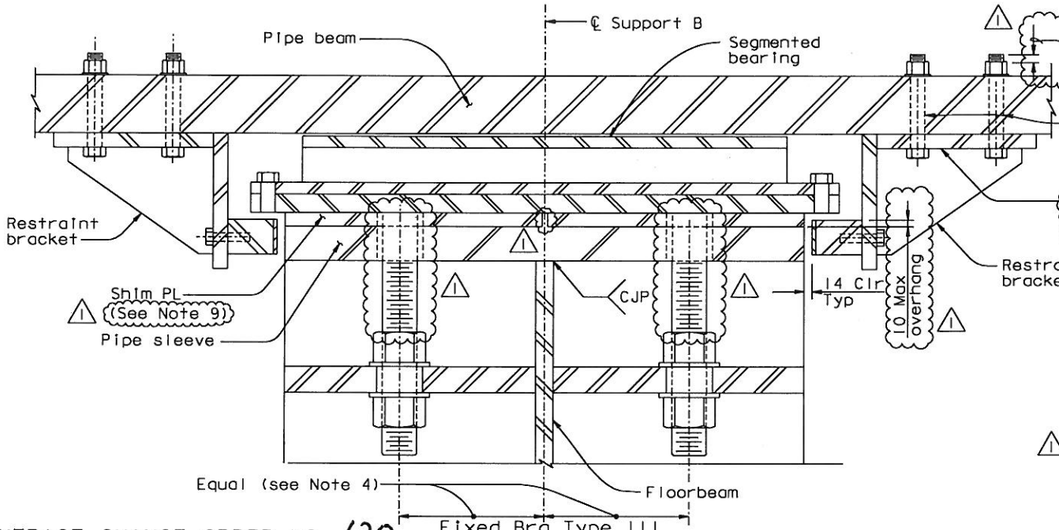

SECTION A-A
NTS

NOTES:

1. For locations of BBIW, BBOE, BBOW and BBIE, see "Hinge A Geometry Layout" sheets.
2. For details not shown, see "Floorbeam at East Transition No.10" sheet.
3. For fixed bearing Type III, see "Hinge A Details No.7" sheet.
4. Verify bearing anchor bolt spacing before drilling oversize bolt holes.
5. For Section L-L, see "Hinge A Details No.6" sheet.
6. The bolt sizes shown correspond to US Standard bolt sizes.
7. Shim as required to align restrainer bracket bearing pad with pipe sleeve.
8. The Contractor shall furnish new 63.5x530 long ASTM A449 galvanized threaded rods for fixed fixed bearing Type III, and shall verify fit into drilled and tapped holes in existing anchor plates.
9. At the Contractor's option, the shim PL may be replaced with high strength non-shrink grout, subject to review and approval of the Engineer.
10. At the Contractor's option, the horizontal stiffener may be made continuous and the vertical stiffener discontinuous.
11. At the Contractor's option, a CJP with backing to remain may be used in lieu of a CJP to connect the floorbeam web and vertical stiffener between the horizontal stiffeners.
12. At the Contractor's option, a 32 mm double fillet weld may be used in lieu of a CJP on diagonal stiffeners to floorbeam web between hinge pipe sleeves and vertical/horizontal stiffeners.

CONTRACT CHANGE ORDER NO. 120
SHEET 18 OF 23

REQUESTS FOR INFORMATION NOT ADDRESSED IN THIS CCO REMAIN IN FORCE

ALL DIMENSIONS ARE IN MILLIMETERS UNLESS OTHERWISE SHOWN

DIST.	COUNTY	ROUTE	KILOMETER POST TOTAL PROJECT	SHEET NO.	TOTAL SHEETS
04	SF	80	13.2/13.9	854RI	1204

REGISTERED ENGINEER - CIVIL
Marwan N. Nader No. C 054426 Exp. 12/31/11 CIVIL
12-6-04
PLANS APPROVAL DATE

The State of California or its officers or agents shall not be responsible for the accuracy or completeness of electronic copies of this plan sheet.

T.Y. LIN / MOFFATT & NICHOL
825 BATTERY STREET
SAN FRANCISCO, CA 94111

Caltrans now has a web site! To get to the web site, go to: http://www.dot.ca.gov

MARK	DATE	DESCRIPTIONS	BY	CH'D	CCO#
1	07/30/10	HINGE A MODIFICATIONS	MN	NV	120

REVISIONS

	BY	CHECKED
DESIGN	M. Nader	N. Vo
DETAILS	G. Baker	N. Vo
QUANTITIES	G. Baker	N. Vo

PREPARED FOR THE STATE OF CALIFORNIA DEPARTMENT OF TRANSPORTATION

R. Manzanarez
PROJECT ENGINEER

BRIDGE NO. 34-0006L/R
KILOMETER POST 13.2/13.9

SAN FRANCISCO OAKLAND BAY BRIDGE
EAST SPAN SEISMIC SAFETY PROJECT
SELF-ANCHORED SUSPENSION BRIDGE
(SUPERSTRUCTURE & TOWER)

HINGE A DETAILS NO. 3

R. Valizadeh/V. Toan/Y.L./W.L./F.C.
DESIGN OVERSIGHT
SIGN OFF DATE 07/30/10

Rev. Date: 5-18-98

ORIGINAL SCALE IN MILLIMETERS FOR REDUCED PLANS 0 10 20 30 40 50 60 70 80 90 100

CU 04
EA 0120F1

DISREGARD PRINTS BEARING EARLIER REVISION DATES

REVISION DATES (PRELIMINARY STAGE ONLY): 04/06/02 07/09/02 12/19/02

SHEET 437RI OF

FILE => I:\bb\04-012001\sas\contract plans and cco\cco\cco#120\2-revsion 07-30-10\dgn\ahhng03.dgn

USERNAME => dwinrow DATE PLOTTED => 30 JUL 2010 TIME PLOTTED => 11:01:09

100 % PS&E

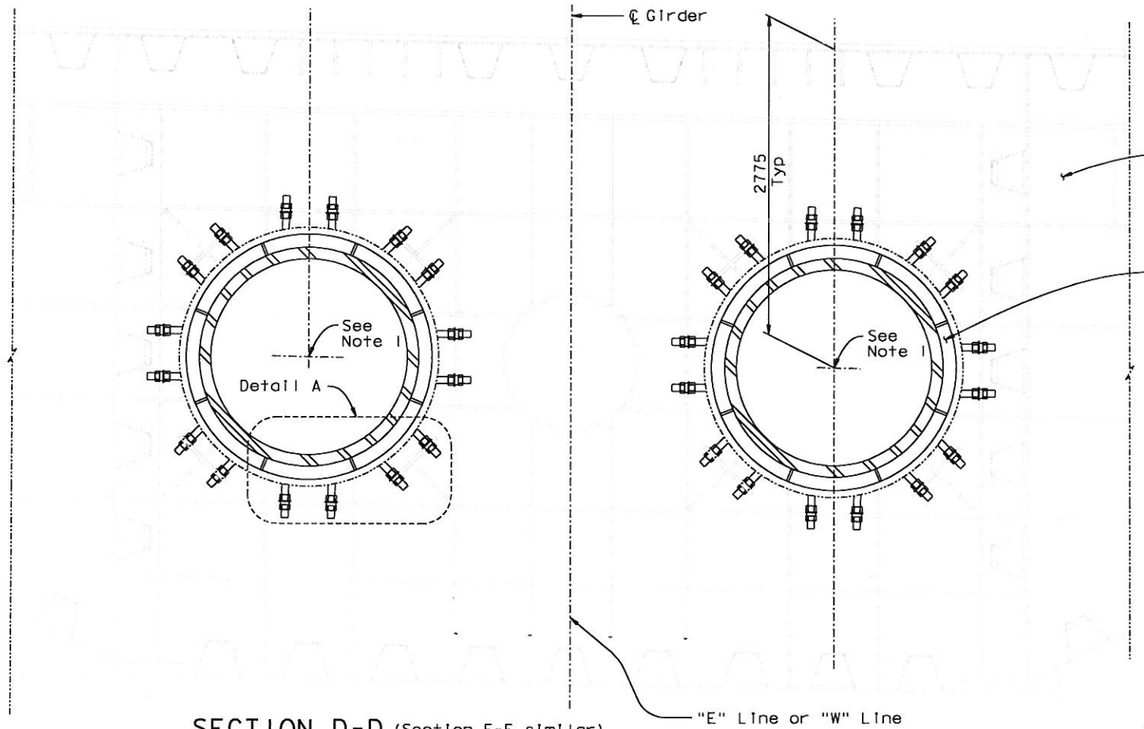

SECTION D-D (Section E-E similar)

1:25

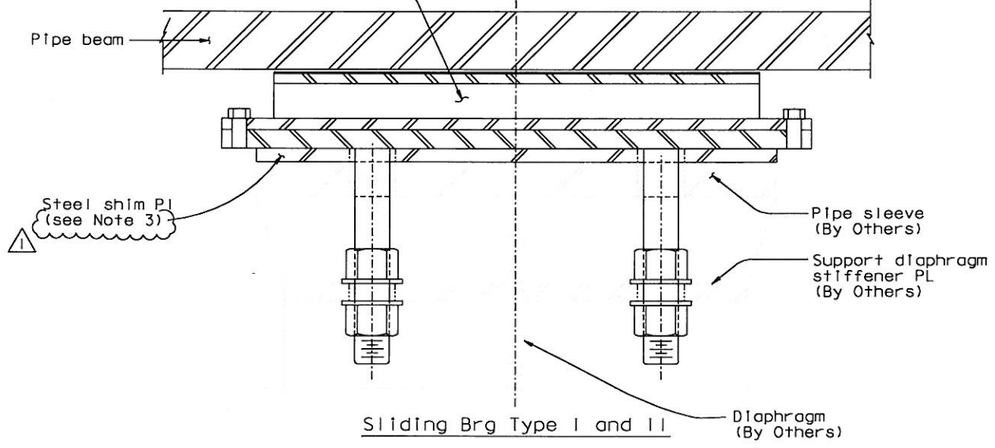

Sliding Brg Type I and II

SECTION A-A

NTS

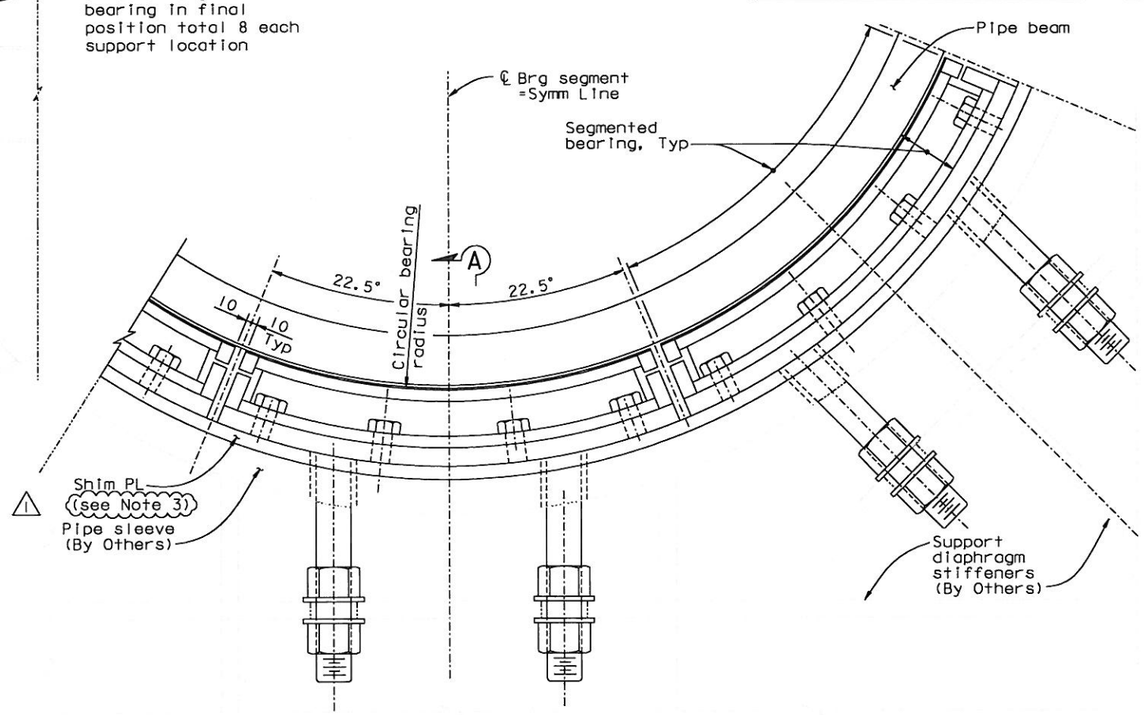

Sliding Brg Type I and II (see Note 2)

DETAIL A

NTS

NOTES:

1. For locations of BCIW, BCOE, BDIW, BDOE, BCOW, BCIE, BDOW and BDIE, see "Hinge A Geometry Layout" sheets.
2. For sliding bearing Types I and II, see "Hinge A Details No.7" sheet.
3. At the Contractor's option, the shim PL may be replaced with high strength non-shrink grout, subject to review and approval of the Engineer.

CONTRACT CHANGE ORDER NO. 120

SHEET 19 OF 23

REQUESTS FOR INFORMATION NOT ADDRESSED IN THIS CCO REMAIN IN FORCE

ALL DIMENSIONS ARE IN MILLIMETERS UNLESS OTHERWISE SHOWN

DIST.	COUNTY	ROUTE	KILOMETER POST TOTAL PROJECT	SHEET NO.	TOTAL SHEETS
04	SF	80	13.2/13.9	855RI	1204

REGISTERED ENGINEER - CIVIL

12-6-04

PLANS APPROVAL DATE

Marwan N. Nader No. C 054426 Exp. 12/31/11 CIVIL — REGISTERED PROFESSIONAL ENGINEER — STATE OF CALIFORNIA

The State of California or its officers or agents shall not be responsible for the accuracy or completeness of electronic copies of this plan sheet.

T.Y. LIN / MOFFATT & NICHOL
825 BATTERY STREET
SAN FRANCISCO, CA 94111

Caltrans now has a web site! To get to the web site, go to: http://www.dot.ca.gov

MARK	DATE	REVISIONS	BY	CH'D	CCO#
1	07/30/10	HINGE A MODIFICATIONS	MN	NV	120

R. Valizadeh/V. Toan/Y.L./W.L./F.C.
DESIGN OVERSIGHT
SIGN OFF DATE 07/30/10

	BY	CHECKED
DESIGN	M. Nader	N. Vo
DETAILS	G. Baker	N. Vo
QUANTITIES	G. Baker	N. Vo

PREPARED FOR THE STATE OF CALIFORNIA DEPARTMENT OF TRANSPORTATION

R. Manzanarez
PROJECT ENGINEER

BRIDGE NO. 34-0006L/R
KILOMETER POST 13.2/13.9

SAN FRANCISCO OAKLAND BAY BRIDGE
EAST SPAN SEISMIC SAFETY PROJECT
SELF-ANCHORED SUSPENSION BRIDGE
(SUPERSTRUCTURE & TOWER)

HINGE A DETAILS NO. 4

Rev. Date: 5-18-98

ORIGINAL SCALE IN MILLIMETERS FOR REDUCED PLANS 0 10 20 30 40 50 60 70 80 90 100

CU 04
EA 0120F1

DISREGARD PRINTS BEARING EARLIER REVISION DATES

REVISION DATES (PRELIMINARY STAGE ONLY): 04/06/02 01/01/02 12/18/02

SHEET 438RI OF

FILE => I:\bb\04-0120F1\sas\contract plans and cco\cco\cco#120\2-revsion 07-30-10\dgn\ahhng04.dgn

100% PS&E

DATE PLOTTED => 30 JUL 2010 TIME PLOTTED => 11:01:51

USERNAME => dwinrow

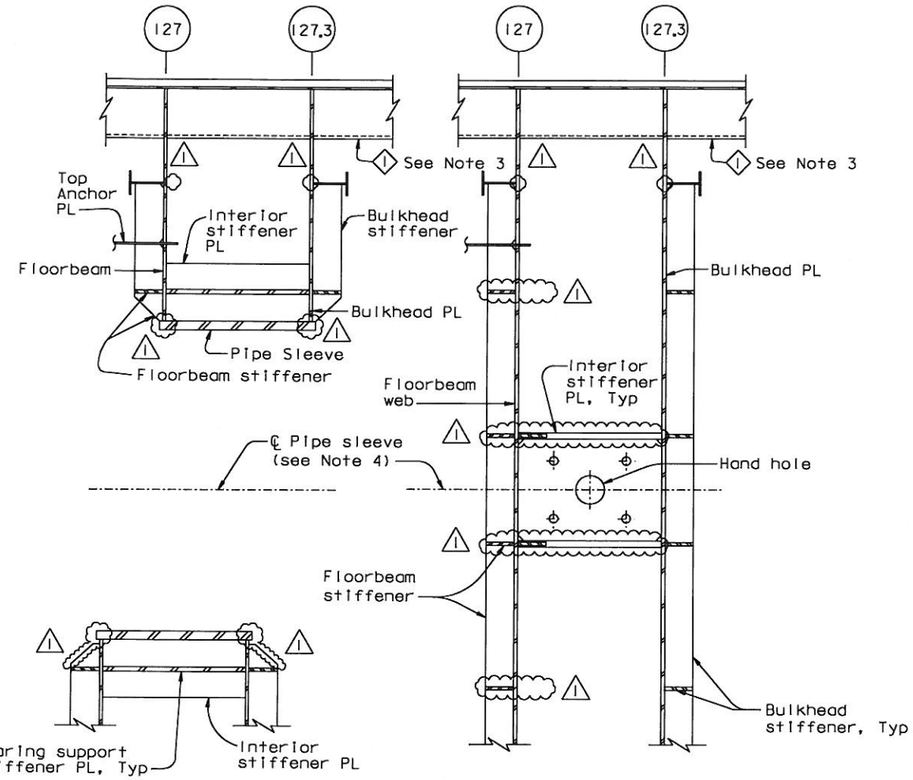

SECTION G-G (see Note 4)
1:20

SECTION F-F (see Note 4)
1:20

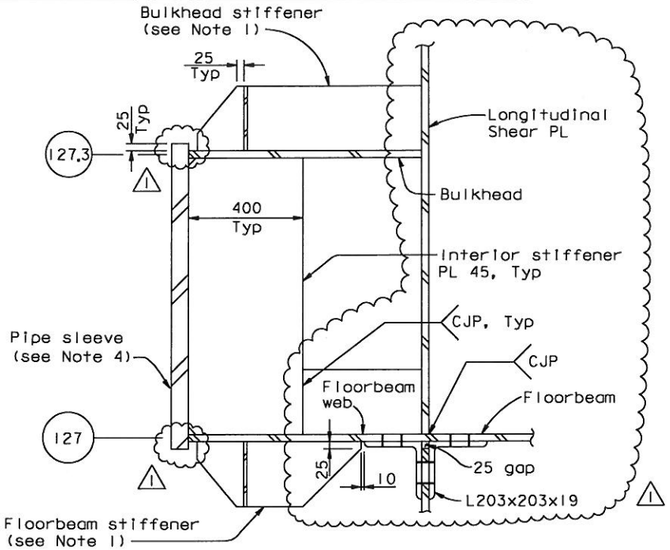

SECTION H-H (see Note 4)

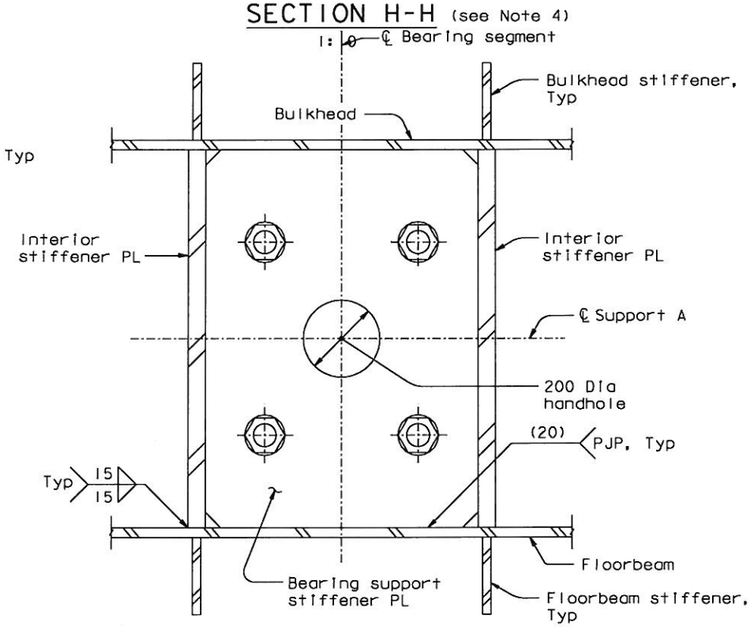

SECTION J-J (see Note 5) ⚠1
NTS

SECTION L-L (see Note 5) ⚠1
NTS

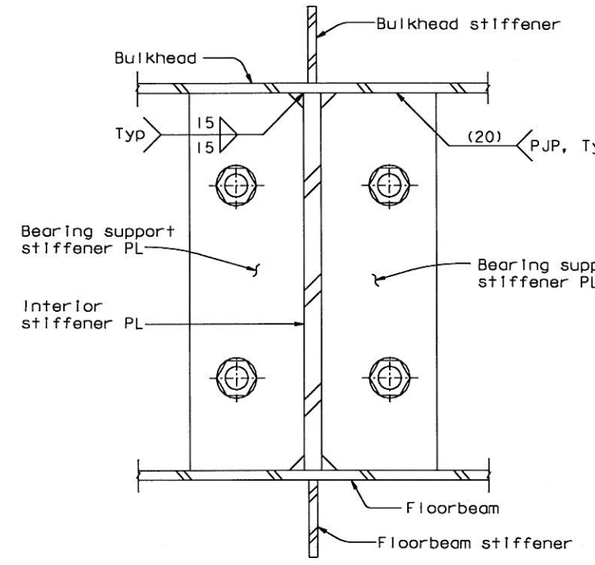

SECTION K-K (see Note 5) ⚠1
NTS

NOTES:

1. Bulkhead stiffener plates at PP127.3 and floorbeam stiffener plates at PP127 shall match in size and layout. For details, see "Floorbeam At East Transition No.8" sheet.
2. For details not shown, see "Floorbeam At East Transition No.8" sheet.
3. For details of stiffener Type ◇1, see "Typical Girder Details No.4" sheet.
4. Hinge pipe beam and segmented bearings not shown for clarity.

⚠1 5. Slotted hole not shown for clarity.

CONTRACT CHANGE ORDER NO. 120
SHEET 20 OF 23

REQUESTS FOR INFORMATION NOT ADDRESSED IN THIS CCO REMAIN IN FORCE

ALL DIMENSIONS ARE IN MILLIMETERS UNLESS OTHERWISE SHOWN

DIST.	COUNTY	ROUTE	KILOMETER POST TOTAL PROJECT	SHEET NO.	TOTAL SHEETS
04	SF	80	13.2/13.9	857RI	1204

Caltrans Metric

REGISTERED ENGINEER - CIVIL
12-6-04
PLANS APPROVAL DATE

REGISTERED PROFESSIONAL ENGINEER — Marwan N. Nader — No. C 054426 — Exp. 12/31/11 — CIVIL — STATE OF CALIFORNIA

The State of California or its officers or agents shall not be responsible for the accuracy or completeness of electronic copies of this plan sheet.

T.Y. LIN / MOFFATT & NICHOL
825 BATTERY STREET
SAN FRANCISCO, CA 94111

Caltrans now has a web site! To get to the web site, go to: http://www.dot.ca.gov

100 % PS&E

USERNAME => dwinrow DATE PLOTTED => 30 JUL 2010 TIME PLOTTED => 11:02:34

R. Valizadeh/V. Toan/Y.L./W.L./F.C.
DESIGN OVERSIGHT
Ryan Valizadeh / Vong Toan / Y. Liu
SIGN OFF DATE 07/30/10

MARK	DATE	DESCRIPTIONS	BY	CH'D	CCO#
⚠1	07/30/10	HINGE A MODIFICATIONS	MN	NV	120

REVISIONS

	BY	CHECKED
DESIGN	M. Nader	N. Vo
DETAILS	G. Baker	N. Vo
QUANTITIES	G. Baker	N. Vo

PREPARED FOR THE STATE OF CALIFORNIA
DEPARTMENT OF TRANSPORTATION

R. Manzanarez
PROJECT ENGINEER

BRIDGE NO. 34-0006L/R
KILOMETER POST 13.2/13.9

CU 04
EA 0120F1

SAN FRANCISCO OAKLAND BAY BRIDGE
EAST SPAN SEISMIC SAFETY PROJECT
SELF-ANCHORED SUSPENSION BRIDGE
(SUPERSTRUCTURE & TOWER)

HINGE A DETAILS NO.6

DISREGARD PRINTS BEARING EARLIER REVISION DATES →
REVISION DATES (PRELIMINARY STAGE ONLY): 01/30/02 07/29/02 12/19/02 11/13/05

SHEET 440RI OF

Rev. Date: 5-18-98

ORIGINAL SCALE IN MILLIMETERS FOR REDUCED PLANS 0 10 20 30 40 50 60 70 80 90 100

FILE => i:\bb\04-012001\sas\contract plans and cco\cco\cco#120\2-revsion 07-30-10\dgn\ahhng06.dgn

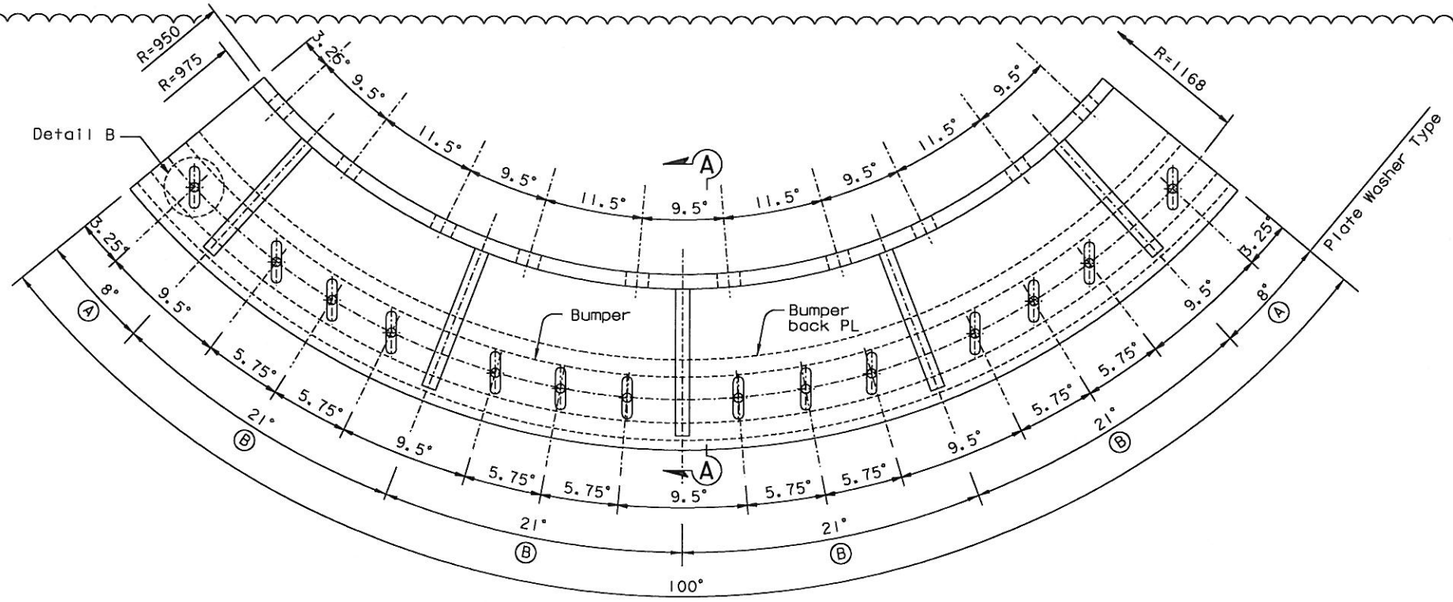

ALTERNATE DETAIL FOR HINGE A
RESTRAINT BRACKET ASSEMBLY AT SUPPORTS A & B

1:5
(Plate washers not shown for clarity)

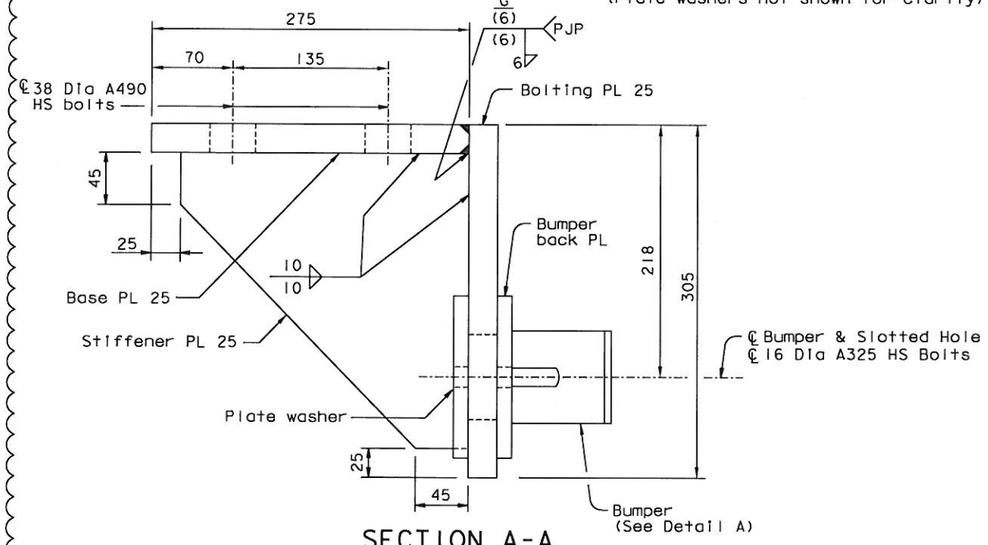

SECTION A-A
1:2.5

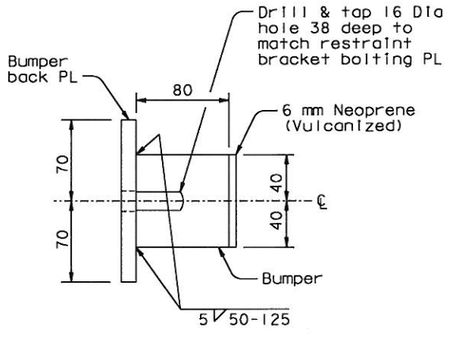

DETAIL A
1:2.5

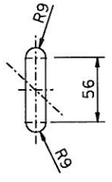

DETAIL B
1:2.5
(Slotted hole)

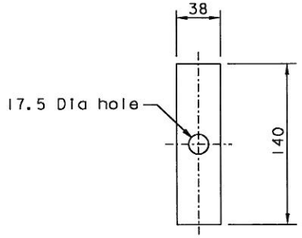

PLATE WASHER (A)
1:2.5

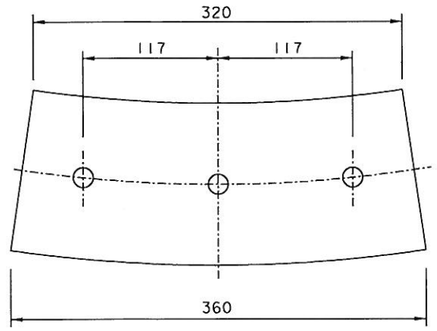

PLATE WASHER (B)
1:2.5

NOTES:

1. All welding shall be in accordance with AWS D1.5.
2. All welding electrodes shall be E70XX.
3. All welding electrodes shall be A709 Grade 50 with supplementary requirement S83 "Non-Fracture Critical, T, Material: Toughness Test and Marking". Charpy v notch (CVN) impact shall conform to ASTM designation A709 for Zone 2.
4. All plate washers shall be shipped loose.

DIST.	COUNTY	ROUTE	KILOMETER POST TOTAL PROJECT	SHEET NO.	TOTAL SHEETS
04	SF	80	13.2/13.9	860AR1	1204

REGISTERED ENGINEER - CIVIL
03-20-12
PLANS APPROVAL DATE
Marwan N. Nader No. C 054426 Exp. 12/31/13 CIVIL
REGISTERED PROFESSIONAL ENGINEER STATE OF CALIFORNIA

The State of California or its officers or agents shall not be responsible for the accuracy or completeness of electronic copies of this plan sheet.

T.Y. LIN / MOFFATT & NICHOL
825 BATTERY STREET
SAN FRANCISCO, CA 94111

Caltrans now has a web site! To get to the web site, go to: http://www.dot.ca.gov

CONTRACT CHANGE ORDER NO. 120
SHEET 21 OF 23

REQUESTS FOR INFORMATION NOT ADDRESSED IN THIS CCO REMAIN IN FORCE

REVISION ⚠1 SUPERCEDES REVISION ⚠0

ALL DIMENSIONS ARE IN MILLIMETERS UNLESS OTHERWISE SHOWN

MARK	DATE	DESCRIPTIONS	BY	CH'D	CCO#
⚠1	05/22/12	HINGE A MODIFICATIONS	NV	MN	120
⚠0	03/20/12	HINGE A MODIFICATIONS	NV	MN	120SI

REVISIONS

R. Vallzadeh/V. Toan/Y.L./W.L./F.C.
DESIGN OVERSIGHT
SIGN OFF DATE 05/22/12

DESIGN BY N. Vo CHECKED M. Nader
DETAILS BY N. Vo CHECKED A. Baumberger
QUANTITIES BY N. Vo CHECKED A. Baumberger

PREPARED FOR THE STATE OF CALIFORNIA DEPARTMENT OF TRANSPORTATION

R. Manzanarez
PROJECT ENGINEER

BRIDGE NO. 34-0006L/R
KILOMETER POST 13.2/13.9

SAN FRANCISCO OAKLAND BAY BRIDGE
EAST SPAN SEISMIC SAFETY PROJECT
SELF-ANCHORED SUSPENSION BRIDGE
(SUPERSTRUCTURE & TOWER)

HINGE A DETAILS NO. 10

Rev. Date: 5-18-98

ORIGINAL SCALE IN MILLIMETERS FOR REDUCED PLANS 0 10 20 30 40 50 60 70 80 90 100

CU 04
EA 0120F1

DISREGARD PRINTS BEARING EARLIER REVISION DATES →
REVISION DATES (PRELIMINARY STAGE ONLY) 03/20/12

SHEET 443AR1 OF

FILE => L:\BB\04-012001\SAS\Contract Plans and CCO\CCO\CCO#120\4-Revision 05-22-11\DGN\ahhng08a.dgn

USERNAME => DWinrow DATE PLOTTED => 22 MAY 2012 TIME PLOTTED => 10:55:24
100% PS&E

DIST.	COUNTY	ROUTE	KILOMETER POST TOTAL PROJECT	SHEET NO.	TOTAL SHEETS
04	SF	80	13.2/13.9	863R2	1204

REGISTERED ENGINEER - CIVIL

12-6-04
PLANS APPROVAL DATE

REGISTERED PROFESSIONAL ENGINEER — Marwan N. Nader — No. C 054426 — Exp. 12/31/11 — CIVIL — STATE OF CALIFORNIA

The State of California or its officers or agents shall not be responsible for the accuracy or completeness of electronic copies of this plan sheet.

T.Y. LIN / MOFFATT & NICHOL
825 BATTERY STREET
SAN FRANCISCO, CA 94111

Caltrans now has a web site! To get to the web site, go to: http://www.dot.ca.gov

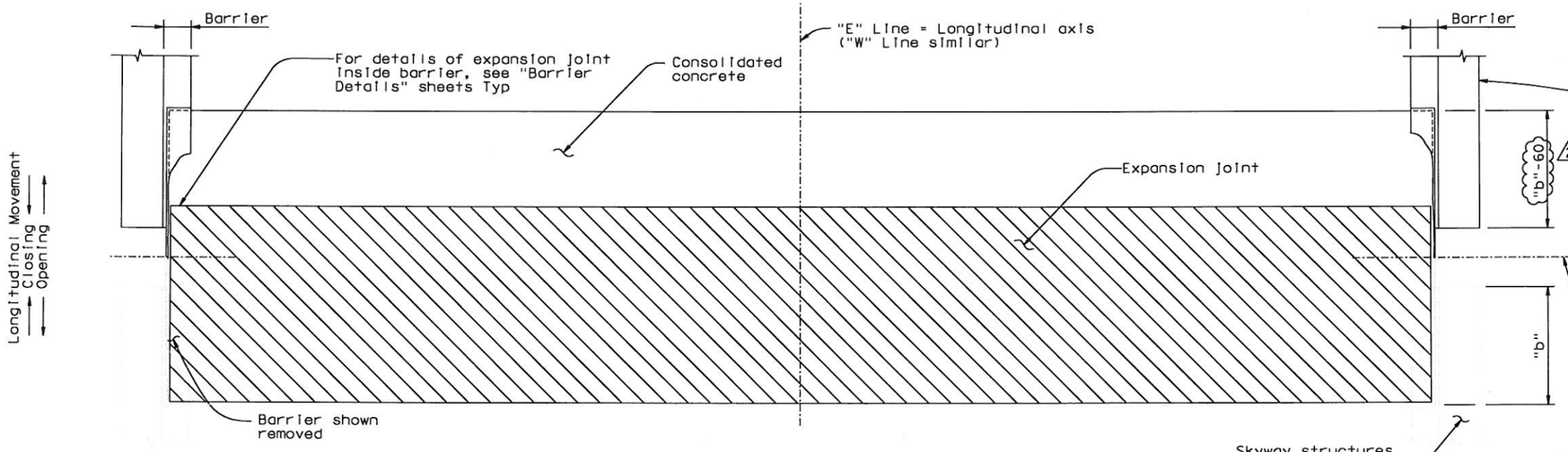

PLAN-EXPANSION JOINT

1:50

LEGEND:

- Expansion Joint
- Consolidated concrete
- Fast setting hydraulic cement concrete

NOTES:

1. For details and orientation of expansion joint and concrete, see "Seismic Joint" plans.
2. Values are for mean temperature of 20°C and no creep and shrinkage.
3. For vertical misalignment due to profile or cross slope variance between the Skyway and SAS girders, the blockout concrete depth shall be varied to place the expansion joint following the longitudinal slope with constant cross slope so as to have a smooth transition between the two roadways. The deck overlay shall be at least 25 mm thick and shall be run off to 50 mm thick at a rate no steeper than 1:100. Prior to installing the expansion joint the Contractor shall conduct an as-built survey and submit the proposed layout of the expansion joint for review and approval.

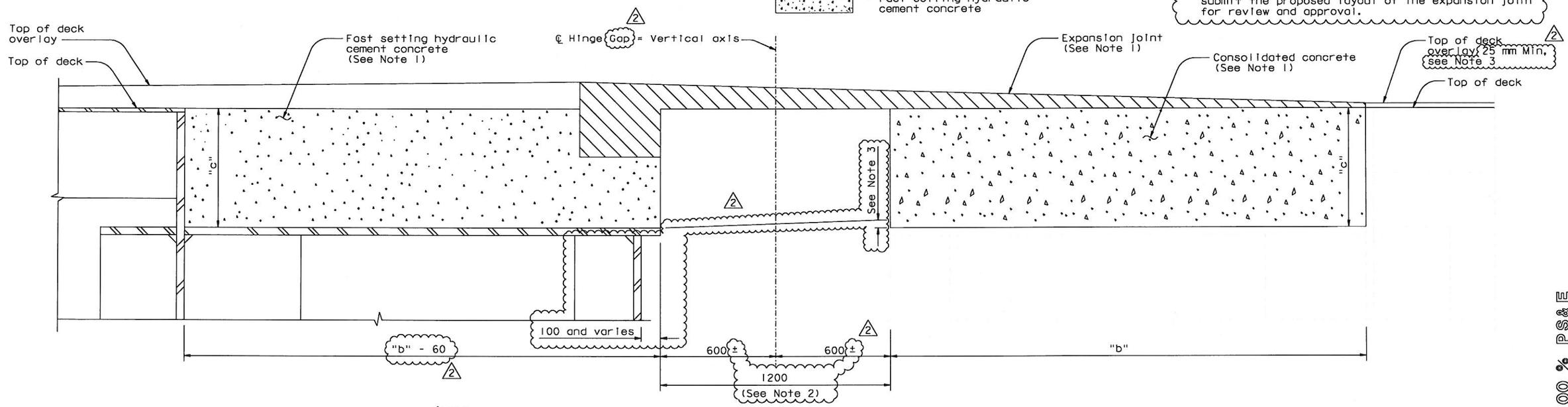

TYPICAL SECTION

1:10

CONTRACT CHANGE ORDER NO. 120
SHEET 22 OF 23

REQUESTS FOR INFORMATION NOT ADDRESSED IN THIS CCO REMAIN IN FORCE

ALL DIMENSIONS ARE IN MILLIMETERS UNLESS OTHERWISE SHOWN

MARK	DATE	DESCRIPTIONS	BY	CH'D	CCO#
2	07/30/10	HINGE A MODIFICATIONS	MN	NV	120
1	11/06/06	PER CALTRANS SEISMIC JOINT MODIFICATIONS	MN	AS	25

REVISIONS

	BY	CHECKED
DESIGN	M. Nader	N. Vo
DETAILS	J. Krizek	N. Vo
QUANTITIES	J. Krizek	N. Vo

PREPARED FOR THE STATE OF CALIFORNIA DEPARTMENT OF TRANSPORTATION

R. Manzanarez
PROJECT ENGINEER

R. Vallzadeh/V. Toon/Y.L./W.L./F.C.
DESIGN OVERSIGHT
SIGN OFF DATE 07/30/10

BRIDGE NO. 34-0006L/R
KILOMETER POST 13.2/13.9

SAN FRANCISCO OAKLAND BAY BRIDGE
EAST SPAN SEISMIC SAFETY PROJECT
SELF-ANCHORED SUSPENSION BRIDGE
(SUPERSTRUCTURE & TOWER)

HINGE A EXPANSION JOINT DETAILS NO. 1

Rev. Date: 5-18-98

ORIGINAL SCALE IN MILLIMETERS FOR REDUCED PLANS 0 10 20 30 40 50 60 70 80 90 100

CU 04
EA 0120F1

DISREGARD PRINTS BEARING EARLIER REVISION DATES →

REVISION DATES (PRELIMINARY STAGE ONLY): 04/30/02 07/30/02 12/18/02 01/16/03

SHEET 446R2 OF

FILE => I:\bb\04-012001\sas\contract plans and cco\cco\cco#120\2-revision 07-30-10\dgn\akjnt03.dgn

100 % PS&E
DATE PLOTTED => 30 JUL 2010 TIME PLOTTED => 11:03:11
USERNAME => gwinrow

DIST.	COUNTY	ROUTE	KILOMETER POST TOTAL PROJECT	SHEET NO.	TOTAL SHEETS
04	SF	80	13.2/13.9	982R1	1204

REGISTERED ENGINEER - CIVIL

12-6-04
PLANS APPROVAL DATE

REGISTERED PROFESSIONAL ENGINEER Marwan N. Nader No. C 054426 Exp. 12/31/11 CIVIL STATE OF CALIFORNIA

The State of California or its officers or agents shall not be responsible for the accuracy or completeness of electronic copies of this plan sheet.

T.Y. LIN / MOFFATT & NICHOL
825 BATTERY STREET
SAN FRANCISCO, CA 94111

Caltrans now has a web site! To get to the web site, go to: http://www.dot.ca.gov

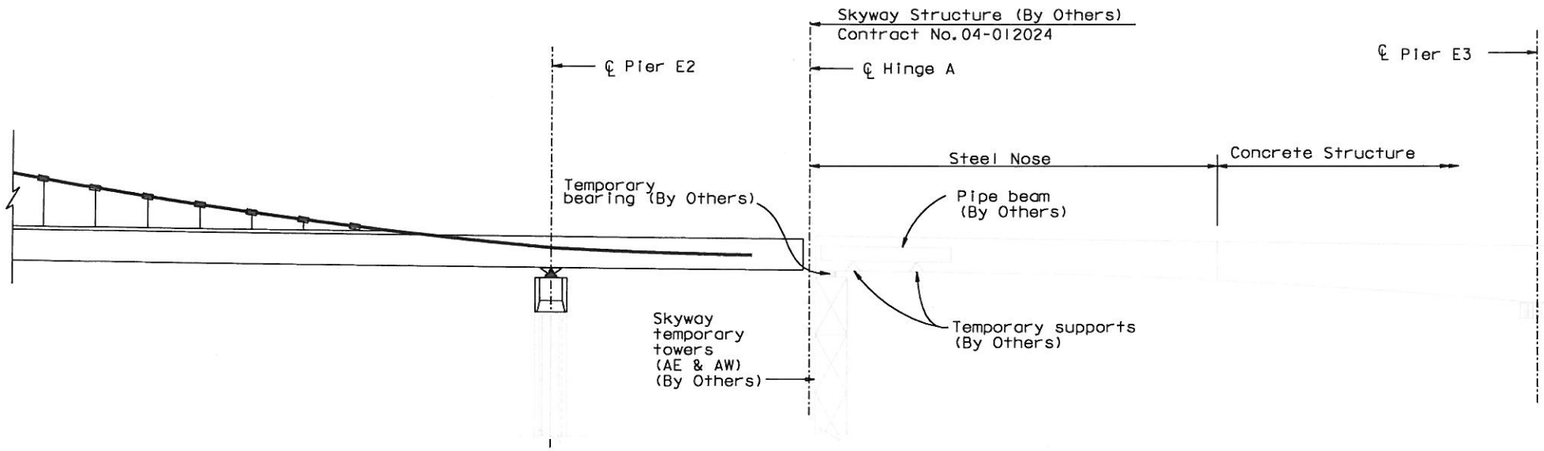

ELEVATION
1:500

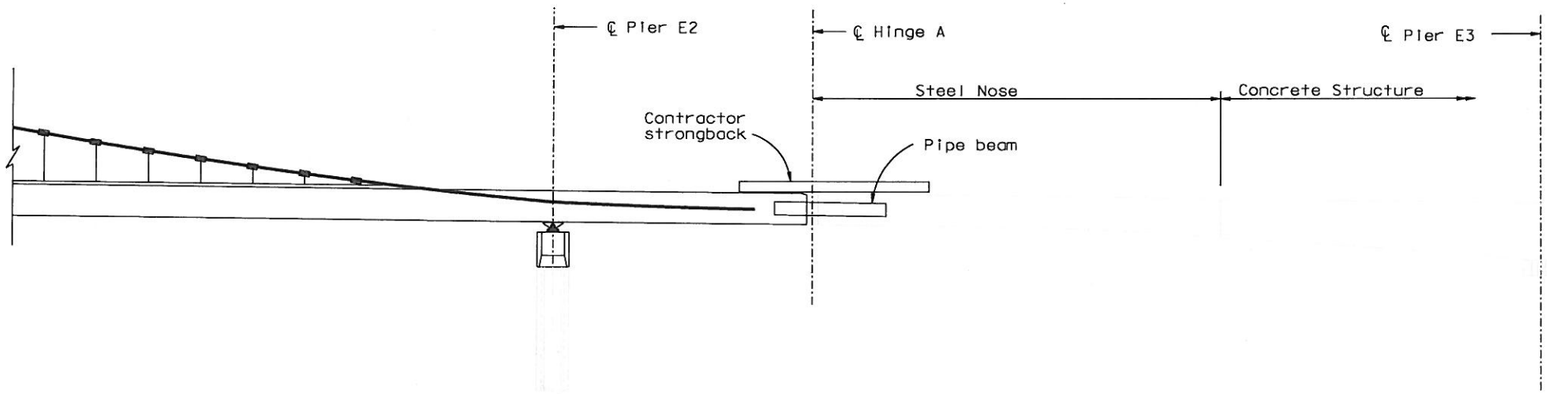

ELEVATION
1:500

Step 1

a. Using load cells or calibrated jacks, the temporary bearing shall be raised or lowered such that the profile grade line meets the elevation given in the plans.

b. The Contractor shall verify that the reaction at the support at Skyway temporary towers (AE & AW) do not exceed 2.25 MN per temporary tower for the target bridge profile (see Note 1).

c. Install and temporarily support circular segmented bearings at Main Span Suspension Bridge hinge diaphragm.

Step 2

a. Erect strongback across the hinge. The strongback system shall be capable of aligning the SAS and Skyway at the centerline of the top deck both in the vertical and transverse directions.

b. Move pipe beams into final positions on temporary supports.

c. Position and fix circular segmented bearings around pipe beams using gap spacers.

d. Extract gap spacers and remove pipe beam temporary supports. Remove strongback.

d. Remove Skyway temporary towers (AE & AW).

NOTES:

1. The reaction value at the support of skyway temporary towers (AE & AW) is for DL plus SDL (no LRT and no Epoxy Asphalt on the Skyway steel nose).

2. The Contractor shall readjust the suspender loads to incorporate the measured reactions (in step 1b) into his computation of target moments and cambers. The readjustment procedures and engineering calculations shall be submitted to the Engineer for review and approval prior to readjustment.

100 % PS&E

CONTRACT CHANGE ORDER NO. 120
SHEET 23 OF 23

REQUESTS FOR INFORMATION NOT ADDRESSED IN THIS CCO REMAIN IN FORCE

ALL DIMENSIONS ARE IN METERS UNLESS OTHERWISE SHOWN

R. Valizadeh/V. Toan/Y.L./W.L./F.C.
DESIGN OVERSIGHT
SIGN OFF DATE 07/30/10

MARK	DATE	DESCRIPTIONS	BY	CH'D	CCO#
1	07/30/10	HINGE A MODIFCATIONS	MN	NV	120

REVISIONS

	BY	CHECKED
DESIGN	M. Nader	C. Seim
DETAILS	C. Mibelli	J. Lopez-Jara
QUANTITIES	C. Mibelli	J. Lopez-Jara

PREPARED FOR THE STATE OF CALIFORNIA DEPARTMENT OF TRANSPORTATION

R. Manzanarez
PROJECT ENGINEER

BRIDGE NO. 34-0006L/R
KILOMETER POST 13.2/13.9

SAN FRANCISCO OAKLAND BAY BRIDGE
EAST SPAN SEISMIC SAFETY PROJECT
SELF-ANCHORED SUSPENSION BRIDGE
(SUPERSTRUCTURE & TOWER)

HINGE A CONSTRUCTION SEQUENCE

Rev. Date: 5-18-98

ORIGINAL SCALE IN MILLIMETERS FOR REDUCED PLANS 0 10 20 30 40 50 60 70 80 90 100

CU 04
EA 0120F1

DISREGARD PRINTS BEARING EARLIER REVISION DATES

REVISION DATES (PRELIMINARY STAGE ONLY) 04/08/02 07/01/02 12/19/02

SHEET 565R1 OF

FILE => I:\bb\04-012001\sas\contract plans and cco\cco\cco#120\2-revsion 07-30-10\dgn\akcns14.dgn

USERNAME => dwinrow DATE PLOTTED => 30 JUL 2010 TIME PLOTTED => 11:03:50