DIST.	COUNTY	ROUTE	KILOMETER POST TOTAL PROJECT	SHEET NO.	TOTAL SHEETS
04	SF	80	13.2/13.9	920S2R1	1204

REGISTERED ENGINEER - CIVIL

05-07-09
PLANS APPROVAL DATE

REGISTERED PROFESSIONAL ENGINEER Marwan N. Nader No. C 054426 Exp. 12/31/11 CIVIL STATE OF CALIFORNIA

The State of California or its officers or agents shall not be responsible for the accuracy or completeness of electronic copies of this plan sheet.

T.Y. LIN / MOFFATT & NICHOL
825 BATTERY STREET
SAN FRANCISCO, CA 94111

Caltrans now has a web site! To get to the web site, go to: http://www.dot.ca.gov

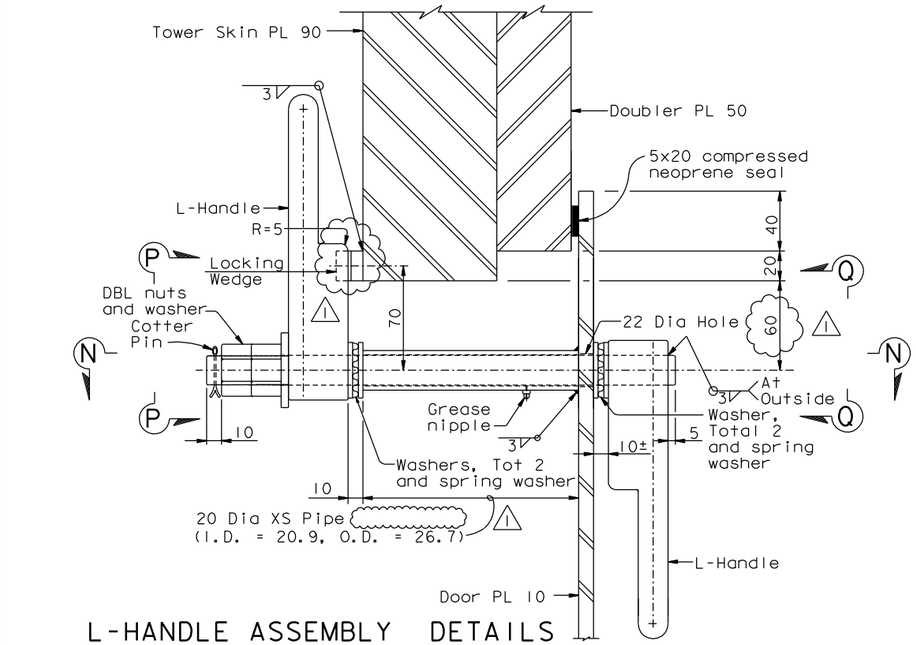

L-HANDLE ASSEMBLY DETAILS

1:2 (For Tower Skin PL) 1

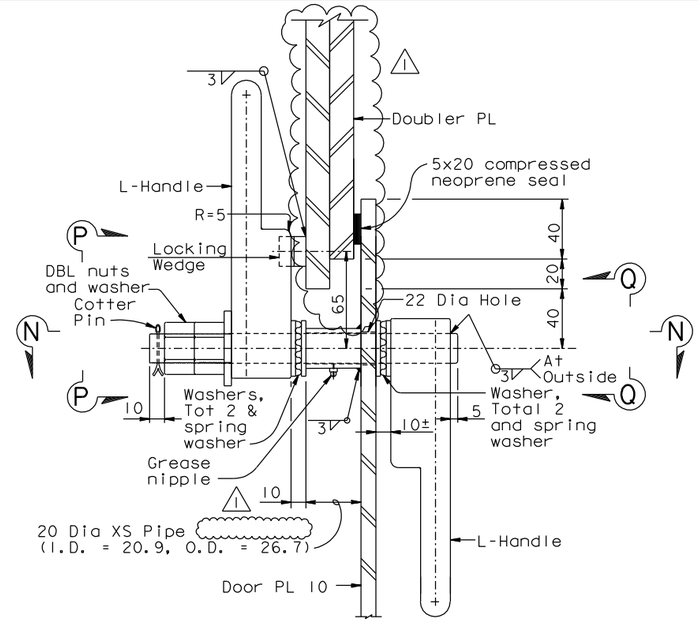

L-HANDLE ASSEMBLY DETAILS

1:2 (Typical) 1

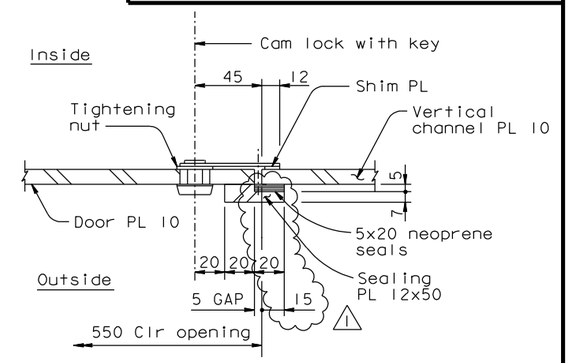

SECTION E-E

1:2

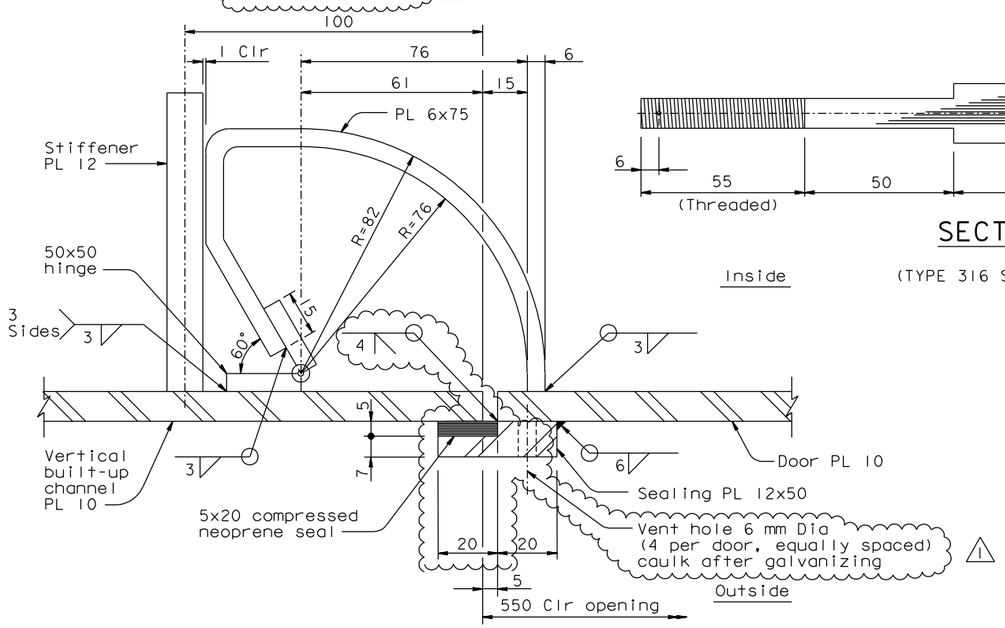

SECTION F-F (DOOR CLOSED)

1:1

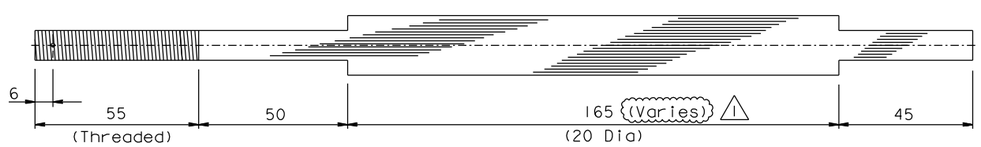

SECTION N-N (Show shaft only)

1:1
(TYPE 316 STAINLESS STEEL ROD)

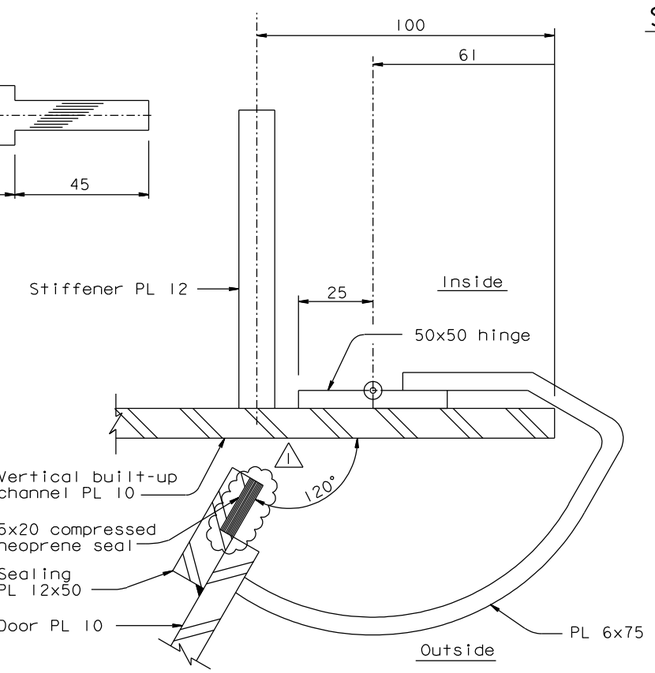

SECTION F-F (DOOR OPEN)

1:1

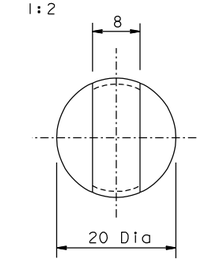

SECTION P-P

1:4

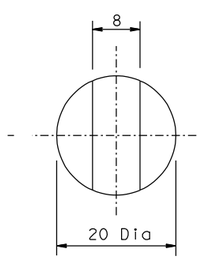

SECTION Q-Q

1:4

ALL DIMENSIONS ARE IN MILLIMETERS UNLESS OTHERWISE SHOWN

CONTRACT CHANGE ORDER NO. _____
SHEET ____ OF ____

REQUESTS FOR INFORMATION NOT ADDRESSED IN THIS CCO REMAIN IN FORCE

R. Valizadeh/V. Toan/Y.L./W.L./F.C.
DESIGN OVERSIGHT
SIGN OFF DATE 10/29/10

MARK	DATE	DESCRIPTIONS	BY	CH'D	CCO#
1	10/29/10	DOORS AND LADDER CAGES	MN	NV	118
0	05/07/09	DOORS AND LADDER CAGES	MN	NV	118

REVISIONS

	BY	CHECKED
DESIGN	M. Nader	N. Vo
DETAILS	M. Nader	N. Vo
QUANTITIES	M. Nader	N. Vo

PREPARED FOR THE STATE OF CALIFORNIA DEPARTMENT OF TRANSPORTATION

R. Manzanarez
PROJECT ENGINEER

BRIDGE NO. 34-0006L/R
KILOMETER POST 13.2/13.9

SAN FRANCISCO OAKLAND BAY BRIDGE
EAST SPAN SEISMIC SAFETY PROJECT
SELF-ANCHORED SUSPENSION BRIDGE
(SUPERSTRUCTURE & TOWER)

TOWER ACCESS DETAILS NO. 4B

Rev. Date: 5-18-98

ORIGINAL SCALE IN MILLIMETERS FOR REDUCED PLANS 0 10 20 30 40 50 60 70 80 90 100

CU 04
EA 0120F1

DISREGARD PRINTS BEARING EARLIER REVISION DATES 05/07/09

REVISION DATES (PRELIMINARY STAGE ONLY)

SHEET 503S2R1 OF

FILE => I:\bb\04-012001\sas\contract plans and cco\cco\cco#118\4-revision 10-29-10\dgn\akacc05d.dgn

USERNAME => DWinrow DATE PLOTTED => 29 OCT 2010 TIME PLOTTED => 11:07:04

100 % PS&E