DIST.	COUNTY	ROUTE	KILOMETER POST TOTAL PROJECT	SHEET NO.	TOTAL SHEETS
04	SF	80	13.2/13.9	920S1	1204

Caltrans Metric

REGISTERED ENGINEER - CIVIL

05-07-09
PLANS APPROVAL DATE

REGISTERED PROFESSIONAL ENGINEER Marwan N. Nader No. C 054426 Exp. 12/31/09 CIVIL STATE OF CALIFORNIA

The State of California or its officers or agents shall not be responsible for the accuracy or completeness of electronic copies of this plan sheet.

T.Y. LIN / MOFFATT & NICHOL
825 BATTERY STREET
SAN FRANCISCO, CA 94111

Caltrans now has a web site! To get to the web site, go to: http://www.dot.ca.gov

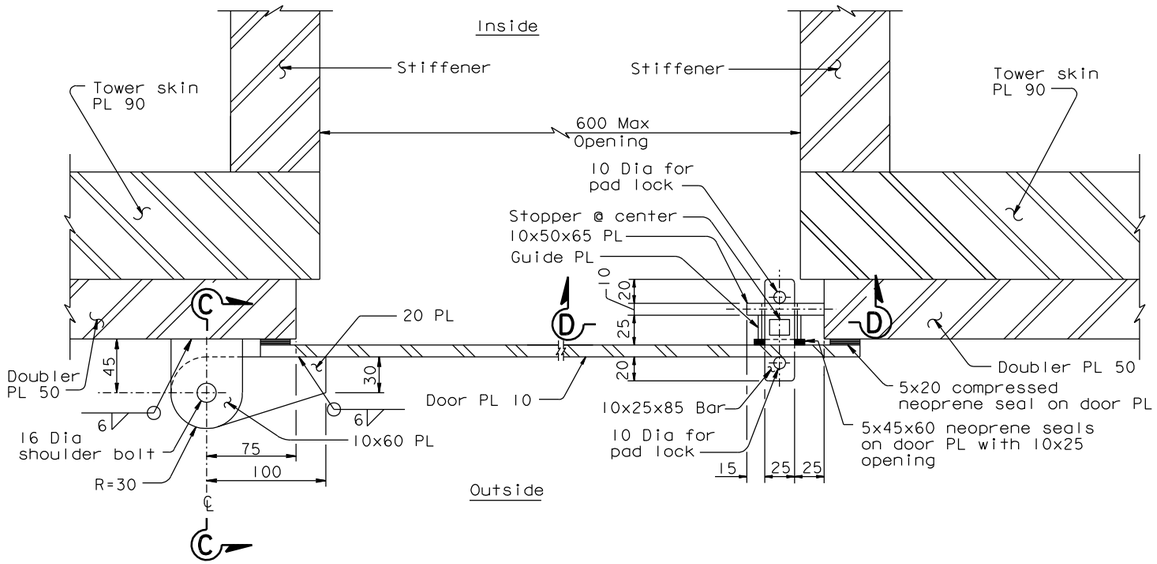

ACCESS OPENING DOOR HINGE AND LOCK DETAIL
1:2.5

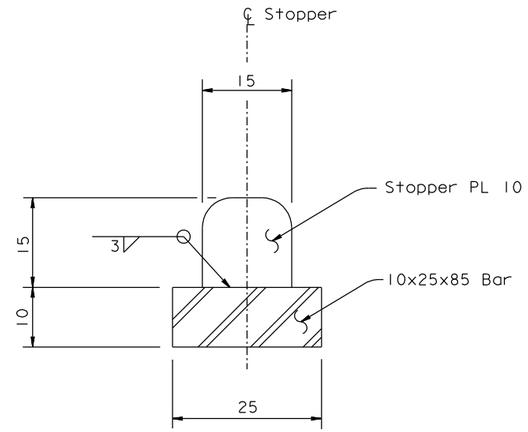

STOPPER DETAIL
2:1

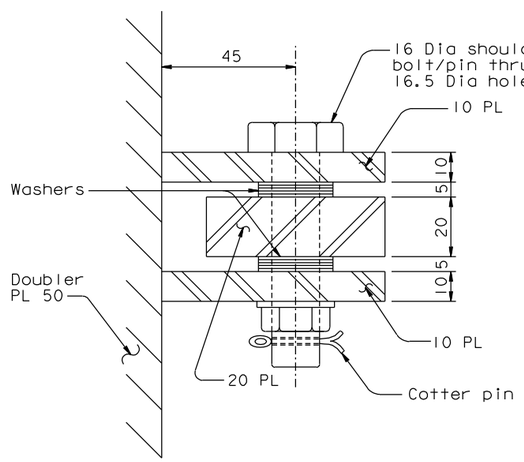

SECTION C-C
1:1

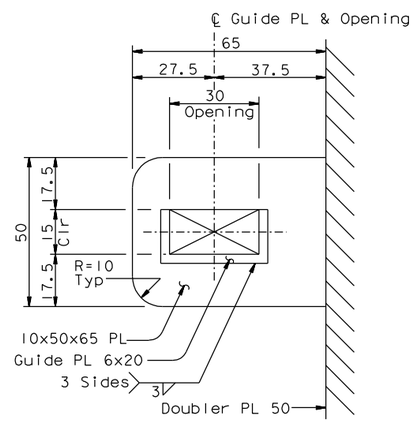

SECTION D-D
1:1

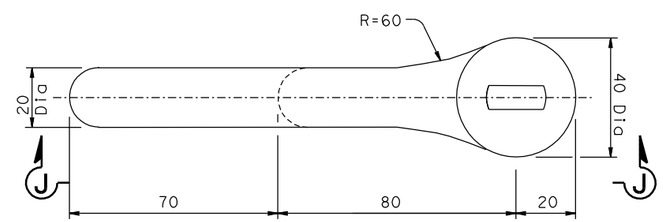

L-HANDLE DETAIL (A709 M GR 345)
1:1

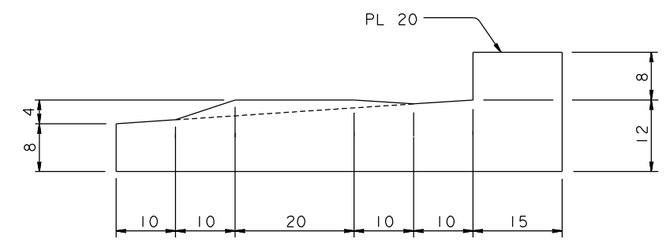

LOCKING WEDGE PROFILE
2:1

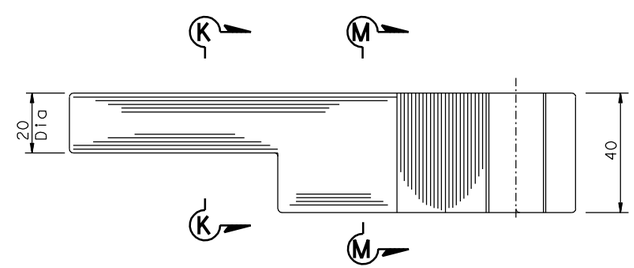

SECTION J-J
1:1

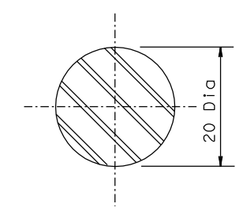

SECTION K-K
2:1

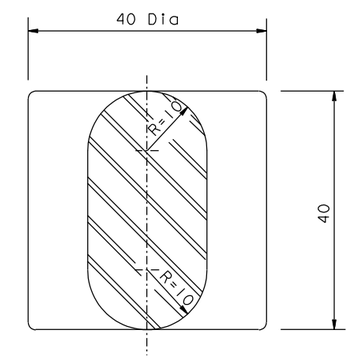

SECTION M-M
2:1

CONTRACT CHANGE ORDER NO. ____
SHEET ___ OF ___

REQUESTS FOR INFORMATION NOT ADDRESSED IN THIS CCO REMAIN IN FORCE

ALL DIMENSIONS ARE IN MILLIMETERS UNLESS OTHERWISE SHOWN

R. Valizadeh/V. Toan/Y.L./W.L./F.C.
DESIGN OVERSIGHT
SIGN OFF DATE 05/07/09

MARK	DATE	DESCRIPTIONS	BY	CH'D	CCO#
0	05/07/09	DOORS AND LADDER CAGES	MN	NV	118

REVISIONS

	BY	CHECKED
DESIGN	M. Nader	N. Vo
DETAILS	M. Nader	N. Vo
QUANTITIES	M. Nader	N. Vo

PREPARED FOR THE STATE OF CALIFORNIA DEPARTMENT OF TRANSPORTATION

R. Manzanarez
PROJECT ENGINEER

BRIDGE NO. 34-0006L/R
KILOMETER POST 13.2/13.9

SAN FRANCISCO OAKLAND BAY BRIDGE
EAST SPAN SEISMIC SAFETY PROJECT
SELF-ANCHORED SUSPENSION BRIDGE
(SUPERSTRUCTURE & TOWER)

TOWER ACCESS DETAILS NO. 4A

Rev. Date: 5-18-98

ORIGINAL SCALE IN MILLIMETERS FOR REDUCED PLANS 0 10 20 30 40 50 60 70 80 90 100

CU 04
EA 0120F1

DISREGARD PRINTS BEARING EARLIER REVISION DATES 05/07/09

REVISION DATES (PRELIMINARY STAGE ONLY)

SHEET 503S1 OF

FILE => I:\bb\04-012001\sas\contract plans and cco\cco\cco#118\2-update 05-07-09\dgn\akacc05c.dgn

100 % PS&E

USERNAME => dwinrow DATE PLOTTED => 08 MAY 2009 TIME PLOTTED => 09:51:55