DIST.	COUNTY	ROUTE	KILOMETER POST TOTAL PROJECT	SHEET NO.	TOTAL SHEETS
04	SF	80	13.2/13.9	800S3RI	1204

REGISTERED ENGINEER - CIVIL

10-22-10

PLANS APPROVAL DATE

REGISTERED PROFESSIONAL ENGINEER Marwan N. Nader No. C 054426 Exp. 12/31/11 CIVIL STATE OF CALIFORNIA

The State of California or its officers or agents shall not be responsible for the accuracy or completeness of electronic copies of this plan sheet.

T.Y. LIN / MOFFATT & NICHOL
825 BATTERY STREET
SAN FRANCISCO, CA 94111

Caltrans now has a web site! To get to the web site, go to: http://www.dot.ca.gov

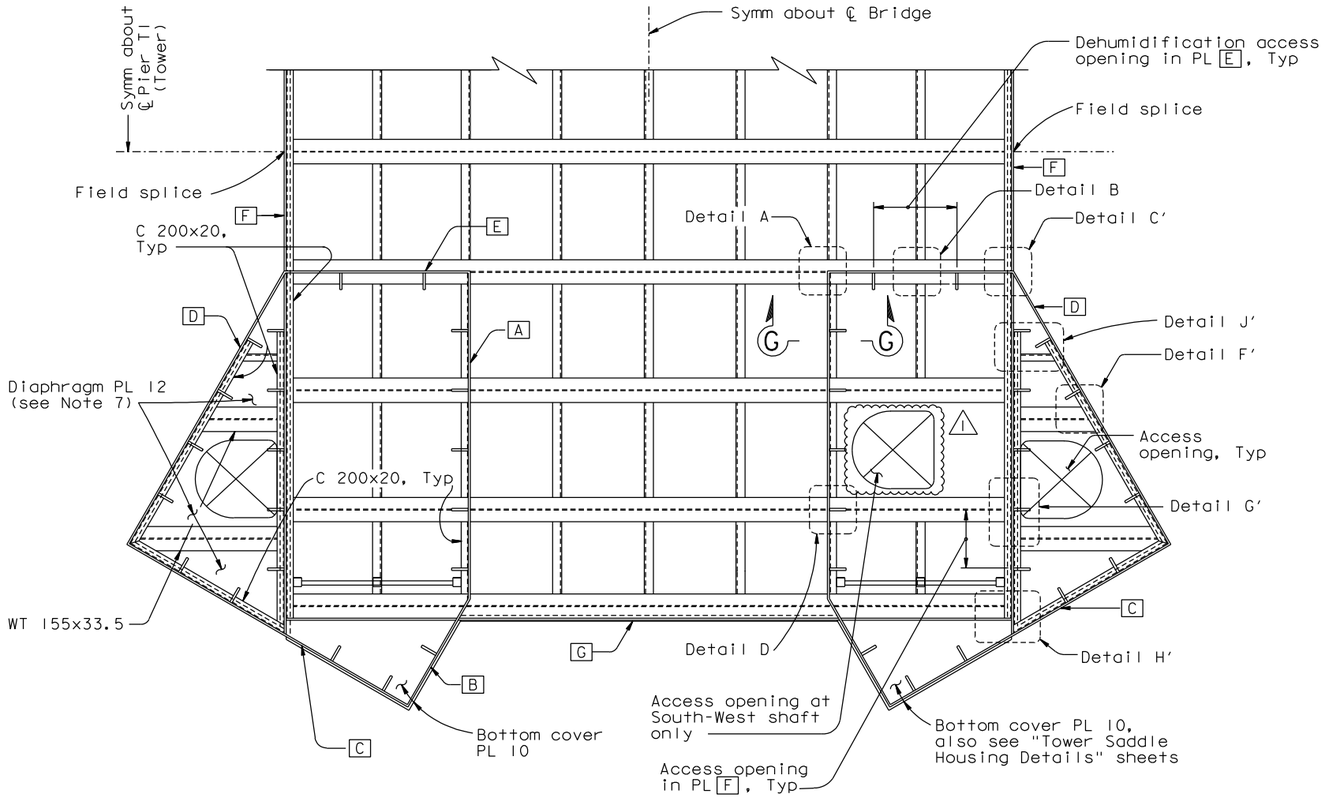

SECTION E-E (Partial framing plan for tower head diaphragm, diaphragm PL not shown for clarity) (see Note 6)
1:25

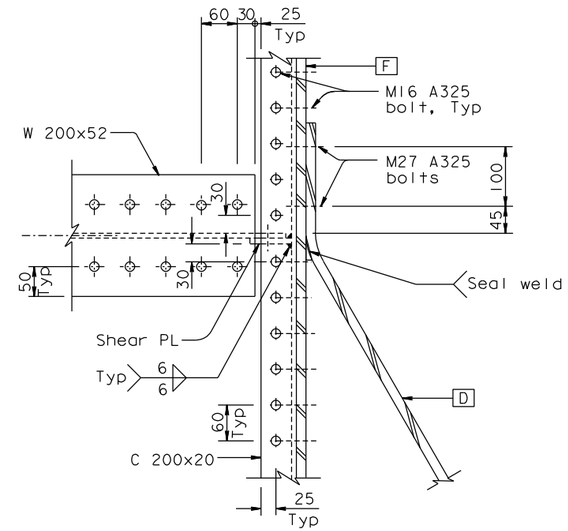

DETAIL C' (Diaphragm PL not shown for clarity)
1:5

ALTERNATIVE DIAPHRAGM & FRAMING IN SPACE CONFINED BY C, D & F

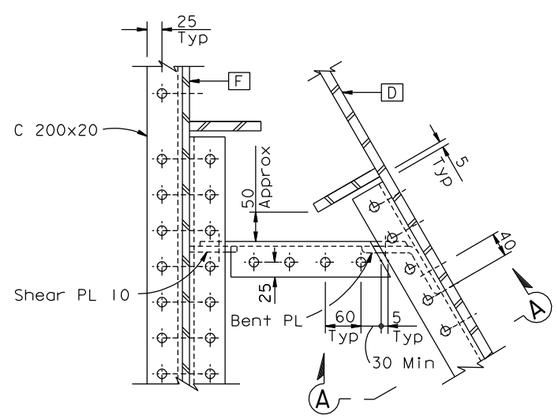

DETAIL J' (Diaphragm PL not shown for clarity)
1:5

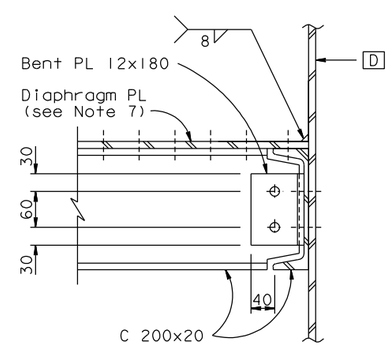

SECTION A-A (Typical C to C connection)
1:25

NOTES:

1. All details shall account for the actual slope and curvature of the tower head diaphragm and slope of tower top plate.
2. For Details A, B, D and Section G-G, see "Tower Head Details No. 4" sheet.
3. For Details F', G' and H', see "Tower Head Details No. 11" sheet.
4. For connection details, see schedule on "Tower Head Details No. 4" sheet.
5. For tower access opening details, see "Tower Access Details" sheets.
6. Section E-E is shown rotated 90° counterclockwise.
7. At the Contractor's option, Diaphragm PL 12 confined by C, D and F may be constructed from 3 straight diaphragm panels consistent with curved profile of the Tower Head Diaphragm.

CONTRACT CHANGE ORDER NO. _____
SHEET ____ OF ____

REQUESTS FOR INFORMATION NOT ADDRESSED IN THIS CCO REMAIN IN FORCE

ALL DIMENSIONS ARE IN MILLIMETERS UNLESS OTHERWISE SHOWN

R. Valizadeh/V. Toan/Y.L./W.L./F.C.
DESIGN OVERSIGHT
Ryan Valizadeh / Vong Toan / Y. Liu
SIGN OFF DATE 10/29/10

MARK	DATE	DESCRIPTIONS	BY	CH'D	CCO#
1	10/29/10	DOORS AND LADDER CAGES	NV	MN	118
0	10/22/10	TOWER HEAD DETAILS	NV	MN	93

REVISIONS

	BY	CHECKED
DESIGN	M. Nader	S. Camo
DETAILS	R. Kanitkar	G. Baker
QUANTITIES	R. Kanitkar	Y. Zhang

PREPARED FOR THE STATE OF CALIFORNIA DEPARTMENT OF TRANSPORTATION

R. Manzanarez
PROJECT ENGINEER

BRIDGE NO. 34-0006L/R
KILOMETER POST 13.2/13.9

SAN FRANCISCO OAKLAND BAY BRIDGE
EAST SPAN SEISMIC SAFETY PROJECT
SELF-ANCHORED SUSPENSION BRIDGE
(SUPERSTRUCTURE & TOWER)

TOWER HEAD DETAILS NO. 10

Rev. Date: 5-18-98

ORIGINAL SCALE IN MILLIMETERS FOR REDUCED PLANS 0 10 20 30 40 50 60 70 80 90 100

CU 04
EA 0120F1

DISREGARD PRINTS BEARING EARLIER REVISION DATES 10/22/10

REVISION DATES (PRELIMINARY STAGE ONLY)

SHEET 383S3R1 OF

FILE => L:\BB\04-012001\SAS\Contract Plans and CCO\CCO\CCO#118\4-Revision 10-29-10\DGN\aghed03a.dgn

100 % PS&E

USERNAME => DWinrow DATE PLOTTED => 29 OCT 2010 TIME PLOTTED => 11:25:51