DIST.	COUNTY	ROUTE	KILOMETER POST TOTAL PROJECT	SHEET NO.	TOTAL SHEETS
04	SF	80	13.2/13.9	796R4	1204

REGISTERED ENGINEER - CIVIL

12-6-04

PLANS APPROVAL DATE

The State of California or its officers or agents shall not be responsible for the accuracy or completeness of electronic copies of this plan sheet.

REGISTERED PROFESSIONAL ENGINEER Marwan N. Nader No. C 054426 Exp. 12/31/11 CIVIL STATE OF CALIFORNIA

T.Y. LIN / MOFFATT & NICHOL
825 BATTERY STREET
SAN FRANCISCO, CA 94111

Caltrans now has a web site! To get to the web site, go to: http://www.dot.ca.gov

Caltrans Metric

Tower head PL	Thickness
A to G	16

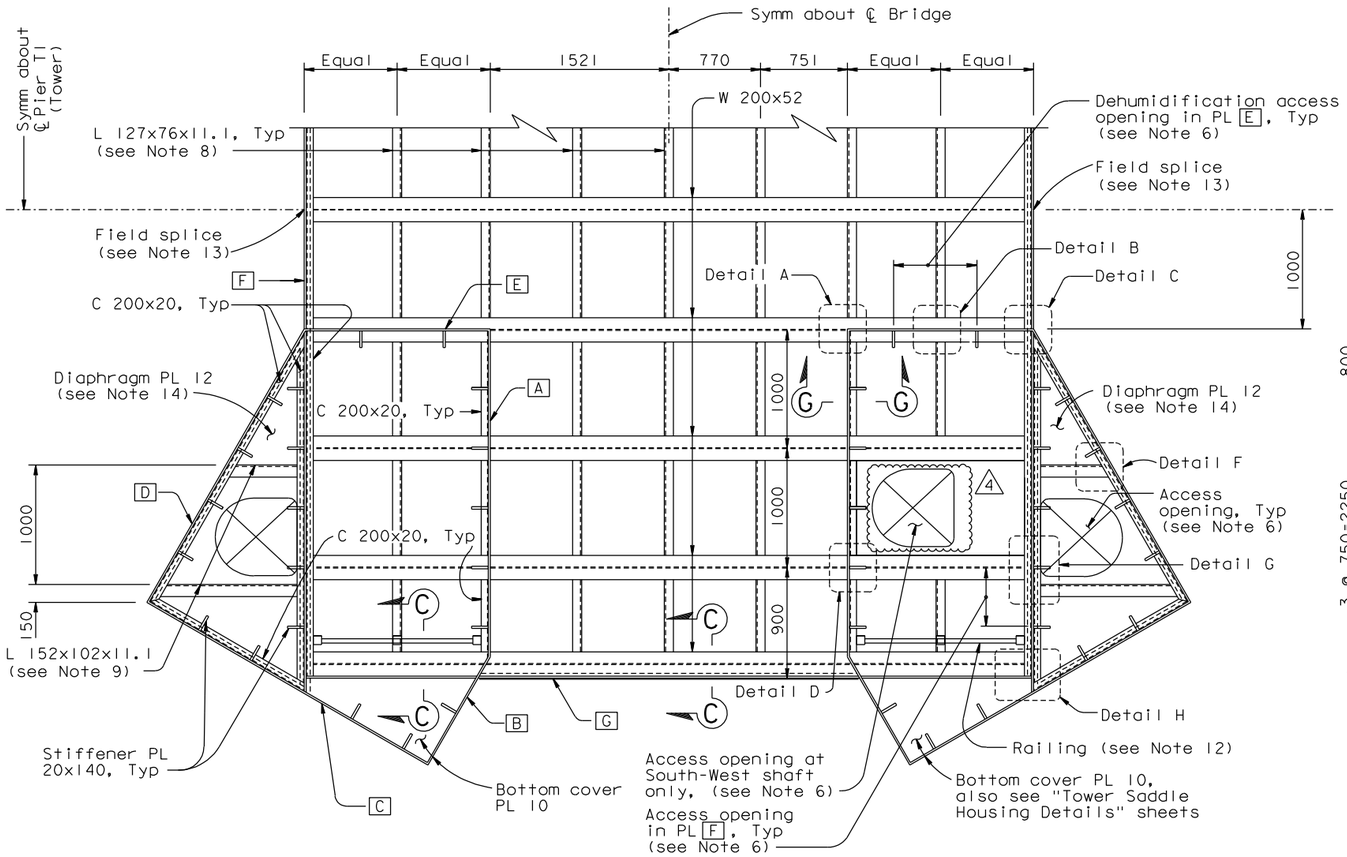

SECTION E-E (Partial framing plan for tower head diaphragm, diaphragm PL not shown for clarity) (see Note 7)

1:25

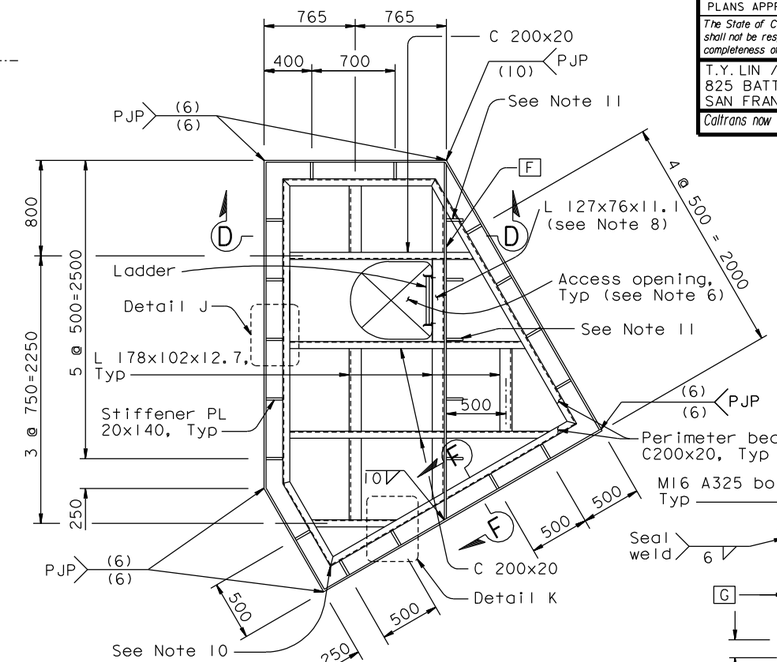

SECTION B-B

1:25

(Framing plan at top of the Tower at Elev 160 m. Tower top PL not shown for clarity)

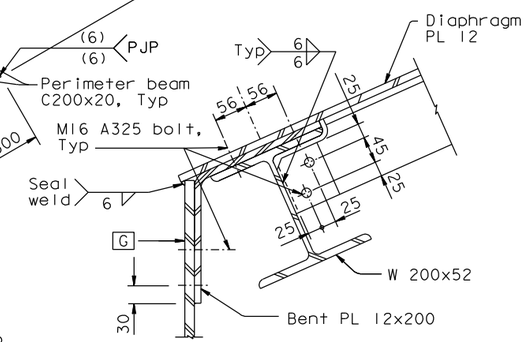

SECTION C-C (See Note 1)

1:5

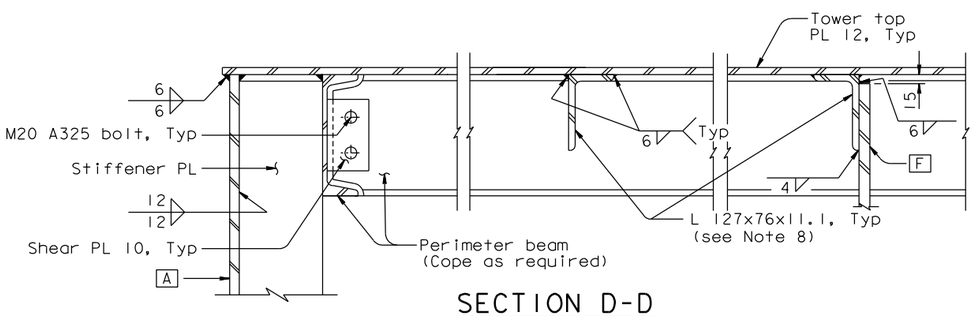

SECTION D-D

1:5

13. At the Contractor's option, the F plate may be spliced in the field with CJP welding or bolted splice, subject to review and approval of the Engineer. For bolted splice detail, see "Tower Head Details No.8" sheet.

14. For alternative diaphragm and framing confined by C, D and F, see "Tower Head Details No.10" sheet.

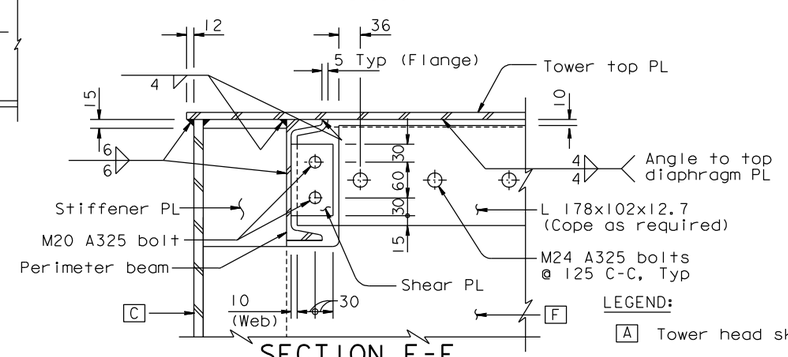

SECTION F-F

1:5

ALL DIMENSIONS ARE IN MILLIMETERS UNLESS OTHERWISE SHOWN

NOTES:

1. All details shall account for the actual slope and curvature of the tower head diaphragm and slope of tower top plate.
2. For Details A, B, C, D and Section G-G, see "Tower Head Details No.4" sheet.
3. For Details F, G and H, see "Tower Head Details No.5" sheet.
4. For Details J and K, see "Tower Head Details No.6" sheet.
5. For connection details, see schedule on "Tower Head Details No.4" sheet.
6. For tower access opening details, see "Tower Access Details" sheets.
7. Section E-E is shown rotated 90° counterclockwise.
8. At the Contractor's option, L127x76x12.7 may be used in lieu of L127x76x11.1, subject to review and approval of the Engineer.
9. At the Contractor's option, L152x102x12.7 may be used in lieu of L152x102x11.1, subject to review and approval of the Engineer.
10. At the Contractor's option, 12 mm bent plate with two M16 A325 HS bolts on each side may be used to connect the perimeter beam at the corners, subject to review and approval of the Engineer.
11. Stiffeners may be terminated below the channel beams, subject to review and approval of the Engineer.
12. Railing posts shall be vertical.

LEGEND:

A Tower head skin PL A

CONTRACT CHANGE ORDER NO. _____
SHEET ____ OF ____

REQUESTS FOR INFORMATION NOT ADDRESSED IN THIS CCO REMAIN IN FORCE

MARK	DATE	DESCRIPTIONS	BY	CH'D	CCO#
4	10/29/10	DOORS AND LADDER CAGES	NV	MN	118
3	10/22/10	TOWER HEAD DETAILS	NV	MN	93
2	01/16/09	TOWER HEAD DETAILS	NV	MN	93
1	07/18/08	TOWER ACCESS	NV	MN	65

REVISIONS

R. Valizadeh/V. Toan/Y.L./W.L./F.C.
DESIGN OVERSIGHT
SIGN OFF DATE 10/29/10

	BY	CHECKED
DESIGN	M. Nader	S. Camo
DETAILS	R. Kanitkar	G. Baker
QUANTITIES	R. Kanitkar	Y. Zhang

PREPARED FOR THE STATE OF CALIFORNIA DEPARTMENT OF TRANSPORTATION

R. Manzanarez
PROJECT ENGINEER

BRIDGE NO. 34-0006L/R
KILOMETER POST 13.2/13.9

SAN FRANCISCO OAKLAND BAY BRIDGE
EAST SPAN SEISMIC SAFETY PROJECT
SELF-ANCHORED SUSPENSION BRIDGE
(SUPERSTRUCTURE & TOWER)

TOWER HEAD DETAILS NO. 3

Rev. Date: 5-18-98

ORIGINAL SCALE IN MILLIMETERS FOR REDUCED PLANS 0 10 20 30 40 50 60 70 80 90 100

CU 04
EA 0120F1

DISREGARD PRINTS BEARING EARLIER REVISION DATES

REVISION DATES (PRELIMINARY STAGE ONLY) 08/07/99 05/31/01 04/08/02 07/09/02 12/19/02 11/13/05

SHEET 379R4 OF

FILE => I:\bb\04-012001\sas\contract plans and cco\cco\cco#118\4-revision 10-29-10\dgn\aghed03.dgn

USERNAME => DWinrow DATE PLOTTED => 29 OCT 2010 TIME PLOTTED => 10:53:51

100% PS&E