DIST.	COUNTY	ROUTE	KILOMETER POST TOTAL PROJECT	SHEET NO.	TOTAL SHEETS
04	SF	80	13.2/13.9	939R2	1204

George Baker
REGISTERED ENGINEER - CIVIL
12-6-04
PLANS APPROVAL DATE

REGISTERED PROFESSIONAL ENGINEER George S. Baker No. C 57112 Exp. 12/31/05 CIVIL STATE OF CALIFORNIA

The State of California or its officers or agents shall not be responsible for the accuracy or completeness of electronic copies of this plan sheet.

T.Y. LIN / MOFFATT & NICHOL
825 BATTERY STREET
SAN FRANCISCO, CA 94111

Caltrans now has a web site! To get to the web site, go to: http://www.dot.ca.gov

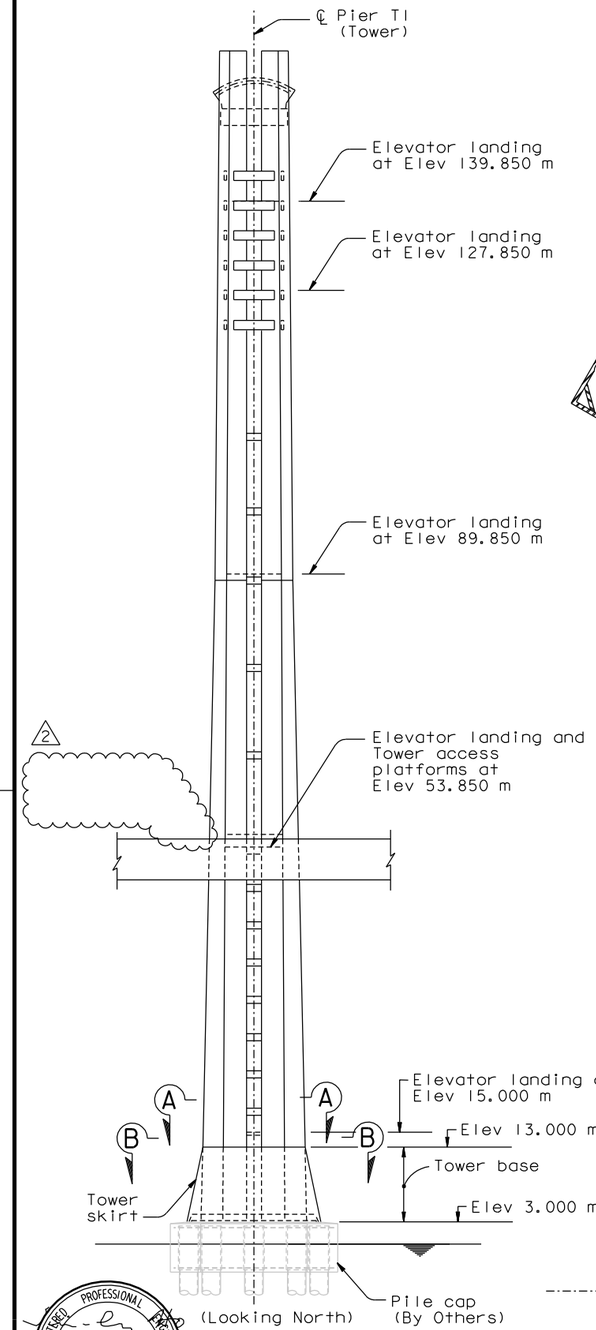

ELEVATION
1:400

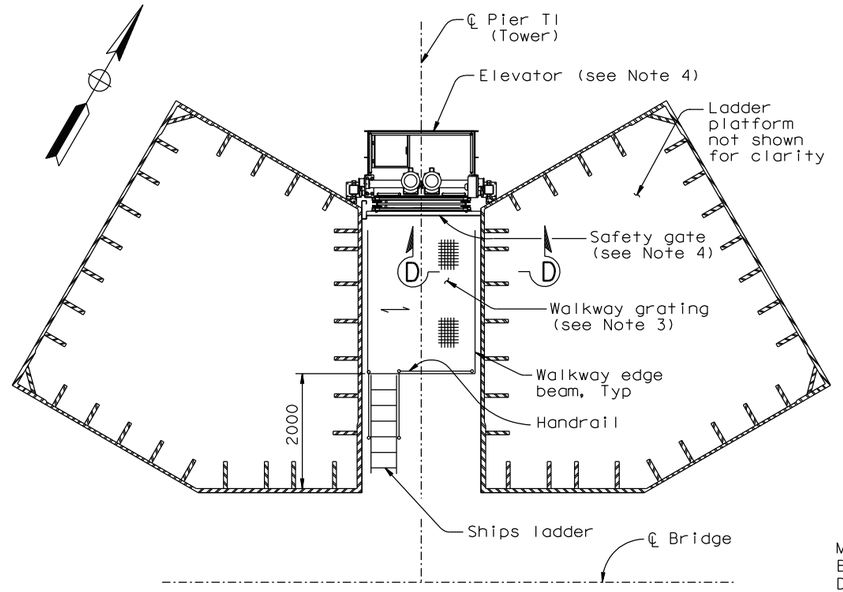

PARTIAL PLAN AT 15.000 M
SECTION A-A
1:50

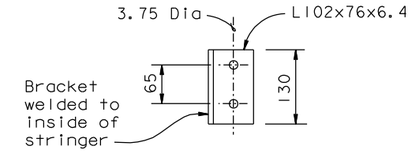

MOUNTING BRACKET DETAIL

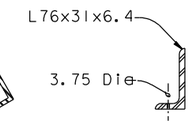

FLOOR CLIPS DETAIL

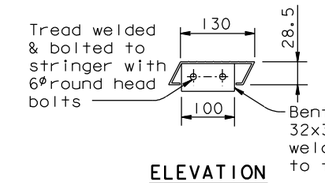

TREAD DETAIL

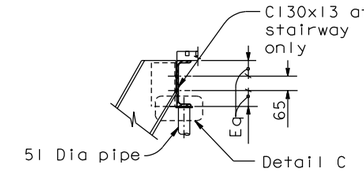

DETAIL B

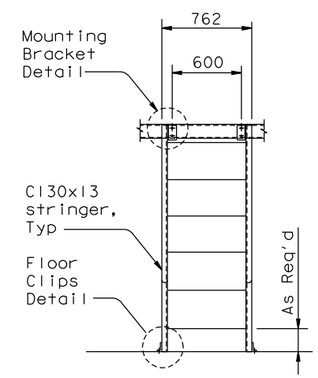

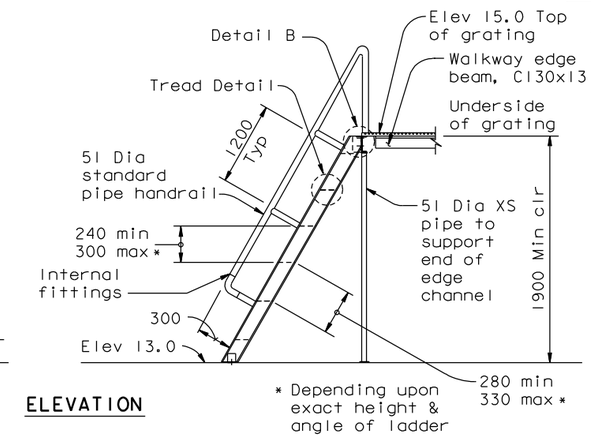

SHIPS LADDER DETAILS
1:25

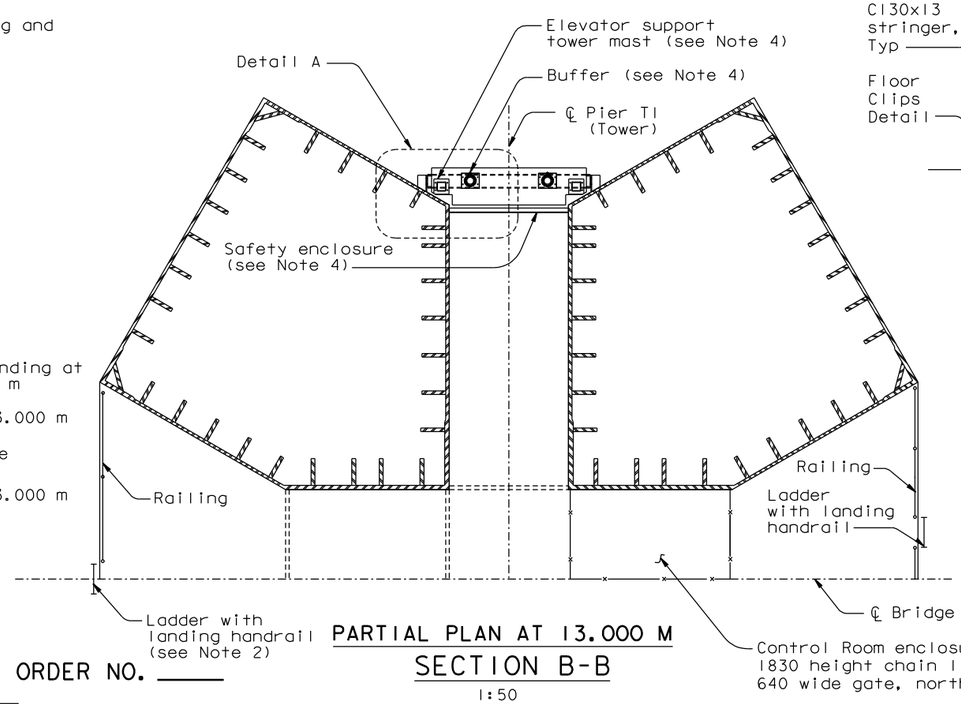

PARTIAL PLAN AT 13.000 M
SECTION B-B
1:50

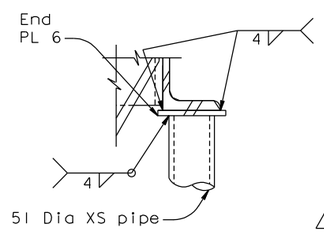

DETAIL C

NOTES:

1. For elevator landing details at elevations 139.850 and 89.850, see "Tower Access Details No.3" sheet.
2. For ladder and landing handrail details, see "Tower Access Details No.7" sheet. For railing details, see Tower Access Details No.8" sheet.
3. Gratings at elevation 15.00 shall have a working load of 7 kN/m (145psf).
4. For elevator and elevator appurtenances, see "Road Plans" sheets.
5. (NOTE DELETED)
6. For elevator landing details at elevation 53.850, see "Tower Access Details No.10" sheet.
7. For Detail A, Section C-C and Section D-D, see "Tower Elevator Support Details No.2" sheet.

Tien Hung Ho
REGISTERED PROFESSIONAL ENGINEER No. C 43990 Exp. 06/30/11 CIVIL STATE OF CALIFORNIA

CONTRACT CHANGE ORDER NO. _____
SHEET ___ OF ___

FOR REVISIONS ONLY

REQUESTS FOR INFORMATION NOT ADDRESSED IN THIS CCO REMAIN IN FORCE

ALL DIMENSIONS ARE IN MILLIMETERS UNLESS OTHERWISE SHOWN

R. Valizadeh/V. Toan/Y.L./W.L./F.C.
DESIGN OVERSIGHT
SIGN OFF DATE 10/19/10

MARK	DATE	DESCRIPTIONS	BY	CH'D	CCO#
2	10/15/10	HANDRAIL AND PLATFORMS	TH	MN	114
1	07/17/09	ELEVATOR DETAILS	TH	MN	85

REVISIONS

	BY	CHECKED
DESIGN	G. Baker	L. Rus
DETAILS	S. Camo	L. Rus
QUANTITIES	D. Turner	J. Leventini

PREPARED FOR THE STATE OF CALIFORNIA DEPARTMENT OF TRANSPORTATION

R. Manzanarez
PROJECT ENGINEER

BRIDGE NO. 34-0006L/R
KILOMETER POST 13.2/13.9

SAN FRANCISCO OAKLAND BAY BRIDGE
EAST SPAN SEISMIC SAFETY PROJECT
SELF-ANCHORED SUSPENSION BRIDGE
(SUPERSTRUCTURE & TOWER)

TOWER ELEVATOR SUPPORT DETAILS NO. 1

Rev. Date: 5-18-98

ORIGINAL SCALE IN MILLIMETERS FOR REDUCED PLANS 0 10 20 30 40 50 60 70 80 90 100

CU 04
EA 0120F1

DISREGARD PRINTS BEARING EARLIER REVISION DATES 04/08/02 07/01/02 12/19/02 11/13/05

SHEET 522R2 OF

FILE => I:\bb\04-0120F1\sas\contract plans and cco\cco\cco*114\8-revision 10-15-10\dgn\akele01.dgn

USERNAME => arivera DATE PLOTTED => 15 OCT 2010 TIME PLOTTED => 14:30:49

100% PS&E