DIST.	COUNTY	ROUTE	KILOMETER POST TOTAL PROJECT	SHEET NO.	TOTAL SHEETS
04	SF	80	13.2/13.9	928R4	1204

REGISTERED ENGINEER - CIVIL

12-6-04
PLANS APPROVAL DATE

REGISTERED PROFESSIONAL ENGINEER Marwan N. Nader No. C 054426 Exp. 12/31/11 CIVIL STATE OF CALIFORNIA

The State of California or its officers or agents shall not be responsible for the accuracy or completeness of electronic copies of this plan sheet.

T.Y. LIN / MOFFATT & NICHOL
825 BATTERY STREET
SAN FRANCISCO, CA 94111

Caltrans now has a web site! To get to the web site, go to: http://www.dot.ca.gov

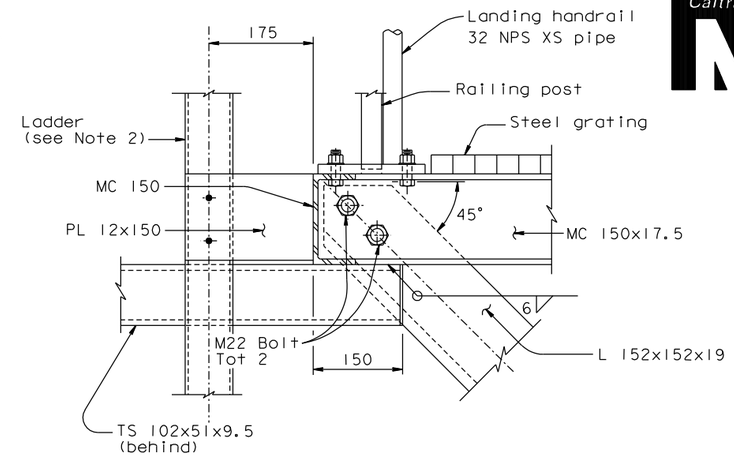

DETAIL F
1:5

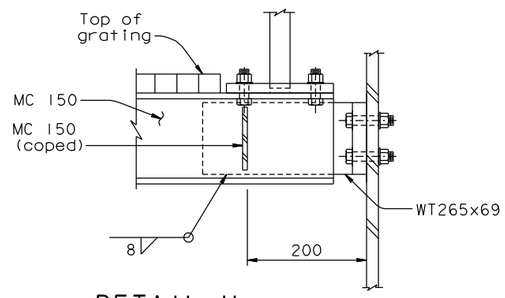

DETAIL H
1:5

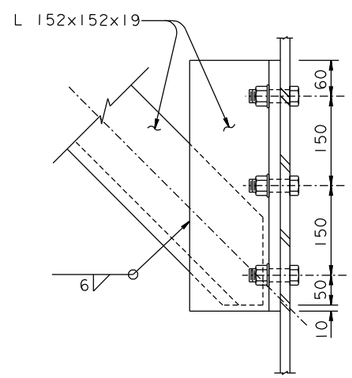

DETAIL J
1:5

RAMP IN STORED POSITION
1:15

NOTES:

1. For railing base plate details, see "Tower Access Details No.8" sheet.
2. For ladder attachment details not shown, see similar "Typical Ladder Connection to Tower Face" on "Tower Access Details No. 7" sheet.
3. Landing handrails are connected to the steel grating. Contractor shall detail typical connection to fit the supporting structure and may submit alternate designs for Engineer's approval.

ALL DIMENSIONS ARE IN MILLIMETERS UNLESS OTHERWISE SHOWN

CONTRACT CHANGE ORDER NO. ____
SHEET ___ OF ___

REQUESTS FOR INFORMATION NOT ADDRESSED IN THIS CCO REMAIN IN FORCE

MARK	DATE	DESCRIPTIONS	BY	CH'D	CCO#
4	10/22/10	HANDRAIL AND PLATFORMS	MN	TH	114
3	07/24/09	HANDRAIL AND PLATFORMS	MN	TH	114
2	06/12/09	HANDRAIL	MN	TH	114
1	04/07/08	MECHANICAL MODIFICATIONS	JD	MN	31

REVISIONS

R. Valizadeh/V. Toan/Y.L./W.L./F.C.
DESIGN OVERSIGHT
SIGN OFF DATE 10/22/10

	BY	CHECKED
DESIGN	M. Nader	N. Vo
DETAILS	G. Baker	N. Vo
QUANTITIES	G. Baker	N. Vo

PREPARED FOR THE STATE OF CALIFORNIA DEPARTMENT OF TRANSPORTATION

R. Manzanarez
PROJECT ENGINEER

BRIDGE NO. 34-0006L/R
KILOMETER POST 13.2/13.9

SAN FRANCISCO OAKLAND BAY BRIDGE
EAST SPAN SEISMIC SAFETY PROJECT
SELF-ANCHORED SUSPENSION BRIDGE
(SUPERSTRUCTURE & TOWER)

TOWER ACCESS DETAILS NO. 12

Rev. Date: 5-18-98

ORIGINAL SCALE IN MILLIMETERS FOR REDUCED PLANS 0 10 20 30 40 50 60 70 80 90 100

CU 04
EA 0120F1

DISREGARD PRINTS BEARING EARLIER REVISION DATES → 04/08/02 01/01/02 12/19/02

REVISION DATES (PRELIMINARY STAGE ONLY)

SHEET 511R4 OF

FILE => I:\bb\04-012001\sas\contract plans and cco\cco\cco#114\9-revision 10-22-10\dgn\akacc12b.dgn

USERNAME => dwinrow DATE PLOTTED => 20 OCT 2010 TIME PLOTTED => 14:02:35

100% PS&E