DIST.	COUNTY	ROUTE	KILOMETER POST TOTAL PROJECT	SHEET NO.	TOTAL SHEETS
04	SF	80	13.2/13.9	926R6	1204

Caltrans Metric

REGISTERED ENGINEER - CIVIL

12-6-04
PLANS APPROVAL DATE

REGISTERED PROFESSIONAL ENGINEER Marwan N. Nader No. C 054426 Exp. 12/31/11 CIVIL STATE OF CALIFORNIA

The State of California or its officers or agents shall not be responsible for the accuracy or completeness of electronic copies of this plan sheet.

T.Y. LIN / MOFFATT & NICHOL
825 BATTERY STREET
SAN FRANCISCO, CA 94111

Caltrans now has a web site! To get to the web site, go to: http://www.dot.ca.gov

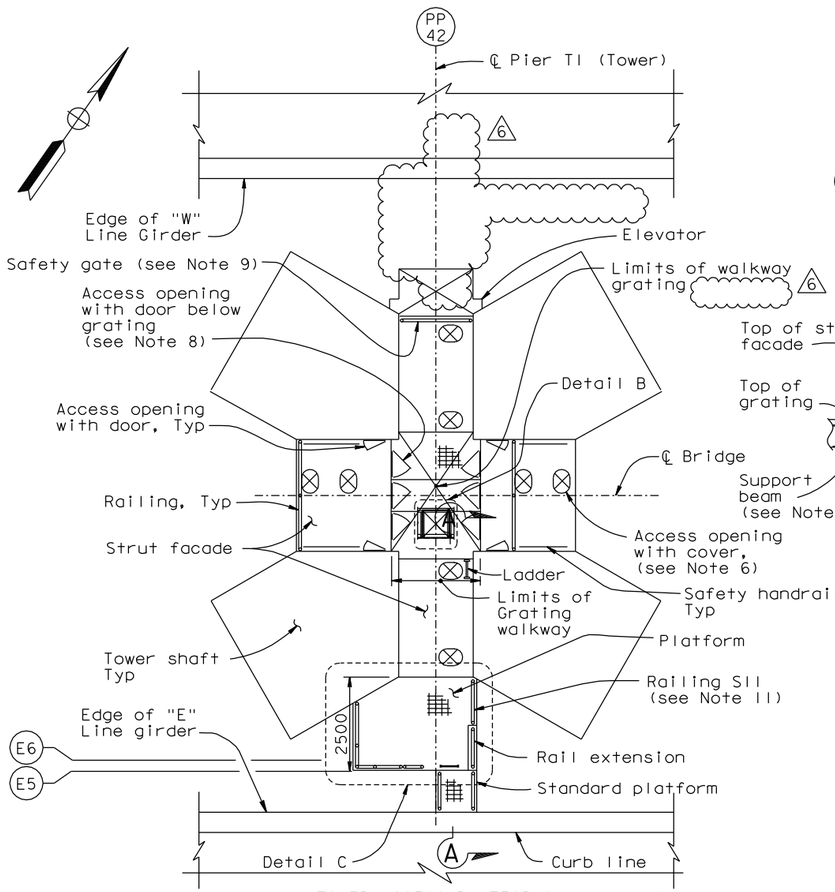

TOWER ACCESS PLATFORMS

SECTION F-F

NTS

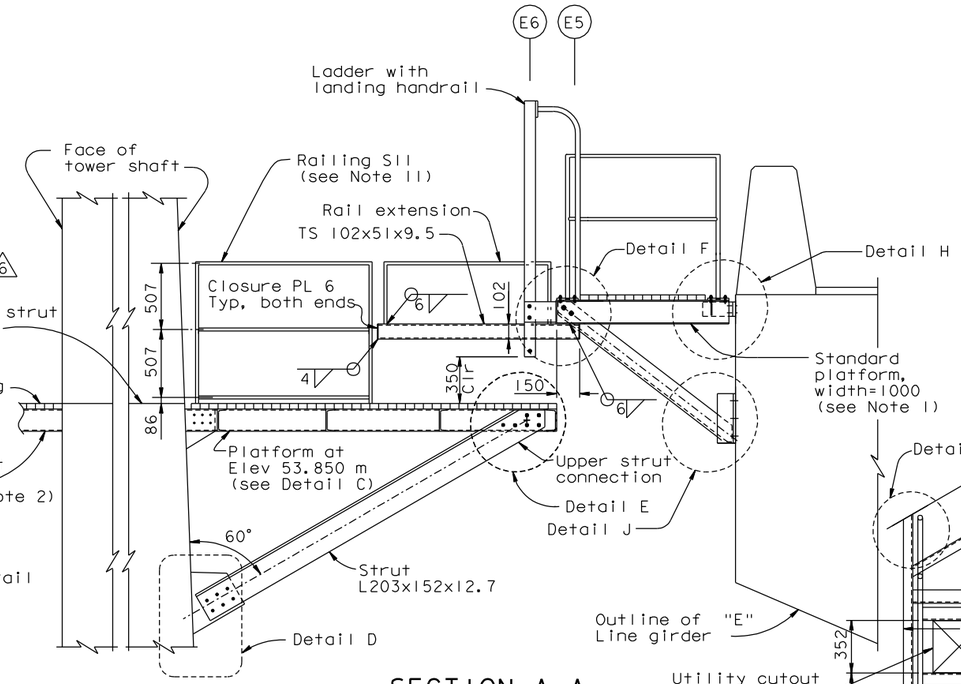

SECTION A-A

1:20

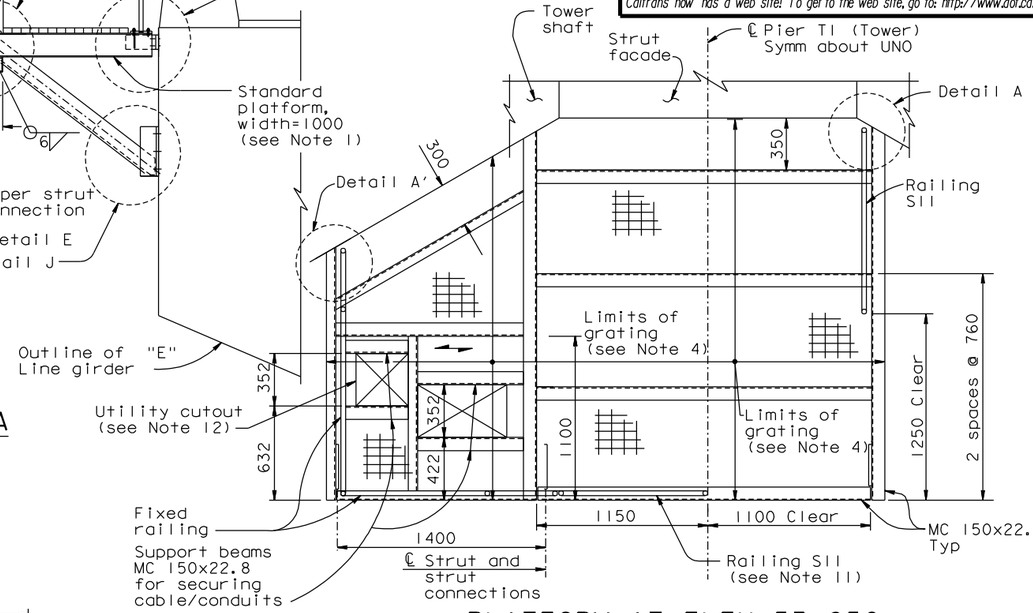

PLATFORM AT ELEV 53.850±

DETAIL C

1:20

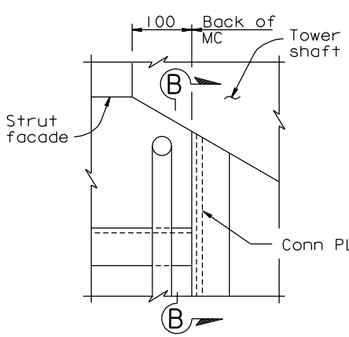

DETAIL A

1:5

(Detail A shown, Detail A' similar)

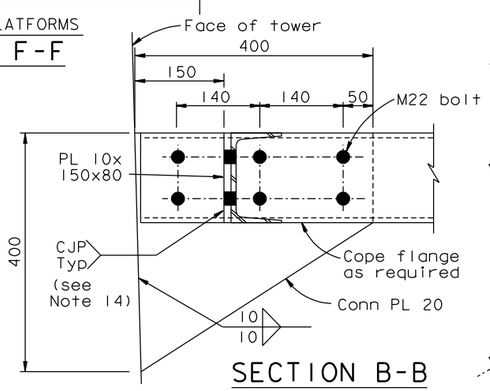

SECTION B-B

1:5

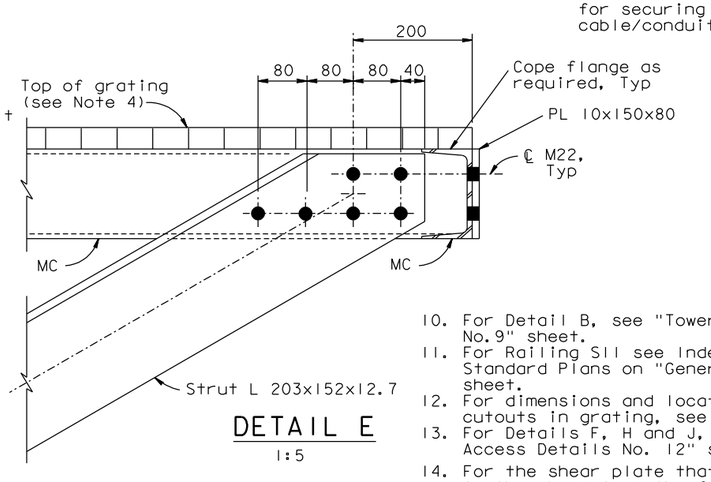

DETAIL E

1:5

LEGEND:

(E6) Girder Working Line 6 on "E" Line.

NOTES:

1. For standard platform details, see "Tower Access Details No.9" sheet.
2. For walkway support beam details, see "Tower Access Details No.3" sheet.
3. For railing details, see "Tower Access Details No.8" sheet.
4. Grating shall be galvanized steel grating with fasteners. Grating working load shall be 14.4 kN/m². (6)
5. For ( ) Details D, see "Tower Access Details No. 11" sheet.
6. For access opening cover details, see "Tower Access Details No.9" sheet. All covers are with risers unless noted otherwise.
7. For location of Tower access opening in strut facade, see "Tower Strut Facade Details" sheets.
8. For access opening and door details, see "Tower Access Details No.4" sheet.
9. For safety gate details, see "Road Plans" sheets.
10. For Detail B, see "Tower Access Details No.9" sheet.
11. For Railing S11 see Index to Caltrans Standard Plans on "General Notes No.1" sheet.
12. For dimensions and locations of utility cutouts in grating, see "Road Plans".
13. For Details F, H and J, see "Tower Access Details No. 12" sheet.
14. For the shear plate that is connected to the channel on the front (open) side, a double-sided 6 mm fillet weld may be used. Shear plate shall be connected to channel flanges and web.

CONTRACT CHANGE ORDER NO. ____
SHEET ____ OF ____

REQUESTS FOR INFORMATION NOT ADDRESSED IN THIS CCO REMAIN IN FORCE

MARK	DATE	DESCRIPTIONS	BY	CH'D	CCO#
6	10/15/10	HANDRAIL AND PLATFORMS	TH	MN	114
5	09/24/10	TOWER STRUT FACADES AND CROSS BRACING	NV	MN	64S1
4	09/25/09	HANDRAIL AND PLATFORMS	MN	TH	114
3	06/12/09	HANDRAIL	MN	TH	114
2	08/15/08	TOWER ACCESS	JD	MN	65
1	09/07/07	MECHANICAL MODIFICATIONS	JD	MN	31

REVISIONS

ALL DIMENSIONS ARE IN MILLIMETERS UNLESS OTHERWISE SHOWN

R. Valizadeh/V. Toan/Y.L./W.L./F.C.
DESIGN OVERSIGHT
SIGN OFF DATE 10/15/10

	BY	CHECKED
DESIGN	M. Nader	M. Gulyas
DETAILS	G. Baker	L. Rus
QUANTITIES	D. Turner	J. Leventini

PREPARED FOR THE STATE OF CALIFORNIA DEPARTMENT OF TRANSPORTATION

R. Manzanarez
PROJECT ENGINEER

BRIDGE NO. 34-0006L/R
KILOMETER POST 13.2/13.9

SAN FRANCISCO OAKLAND BAY BRIDGE
EAST SPAN SEISMIC SAFETY PROJECT
SELF-ANCHORED SUSPENSION BRIDGE
(SUPERSTRUCTURE & TOWER)

TOWER ACCESS DETAILS NO. 10

Rev. Date: 5-18-98

ORIGINAL SCALE IN MILLIMETERS FOR REDUCED PLANS 0 10 20 30 40 50 60 70 80 90 100

CU 04
EA 0120F1

DISREGARD PRINTS BEARING EARLIER REVISION DATES

REVISION DATES (PRELIMINARY STAGE ONLY) 05/18/99 08/02/99 05/31/01 04/08/02 07/17/02 12/19/02

SHEET 509R6 OF

FILE => I:\bb\04-012001\sas\contract plans and cco\cco\cco#114\8-revision 10-15-10\dgn\akacc09.dgn

USERNAME => arivera DATE PLOTTED => 15 OCT 2010 TIME PLOTTED => 14:33:12

100% PS&E