DIST.	COUNTY	ROUTE	KILOMETER POST TOTAL PROJECT	SHEET NO.	TOTAL SHEETS
04	SF	80	13.2/13.9	924R3	1204

REGISTERED ENGINEER - CIVIL

12-6-04
PLANS APPROVAL DATE

REGISTERED PROFESSIONAL ENGINEER Marwan N. Nader No. C 054426 Exp. 12/31/11 CIVIL STATE OF CALIFORNIA

The State of California or its officers or agents shall not be responsible for the accuracy or completeness of electronic copies of this plan sheet.

T.Y. LIN / MOFFATT & NICHOL
825 BATTERY STREET
SAN FRANCISCO, CA 94111

Caltrans now has a web site! To get to the web site, go to: http://www.dot.ca.gov

Caltrans Metric

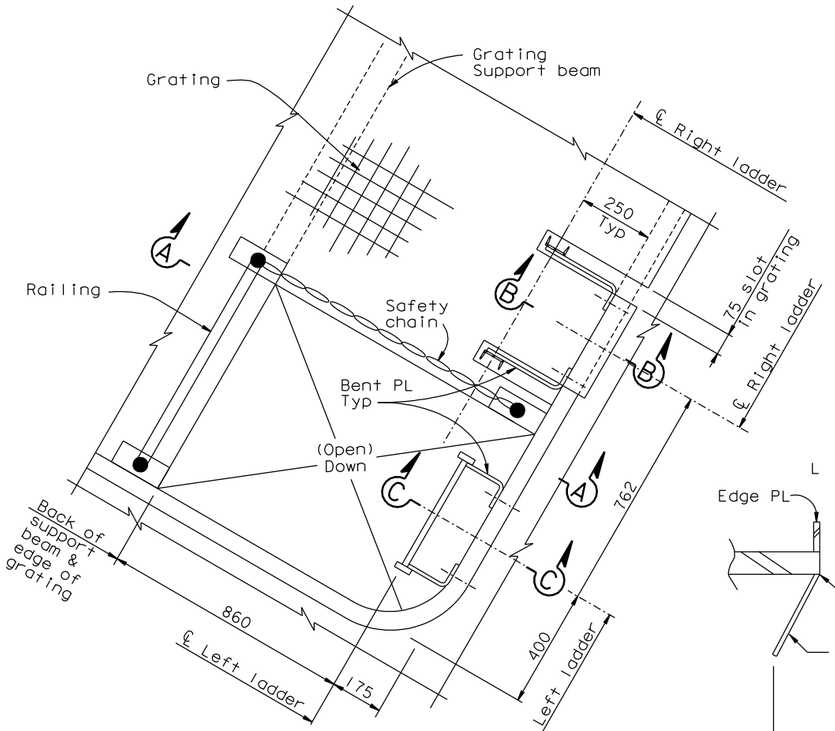

DETAIL C
1:10

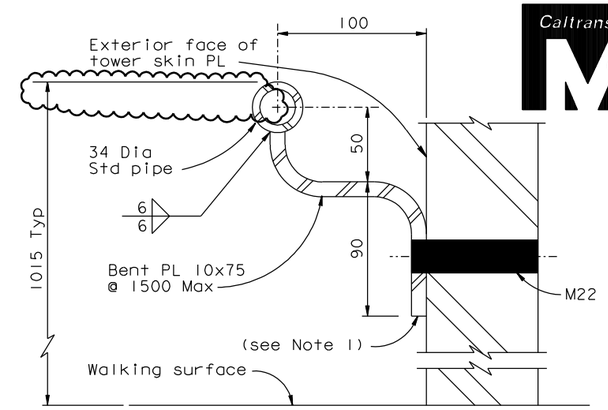

SAFETY HANDRAIL TYPICAL DETAIL
1:2

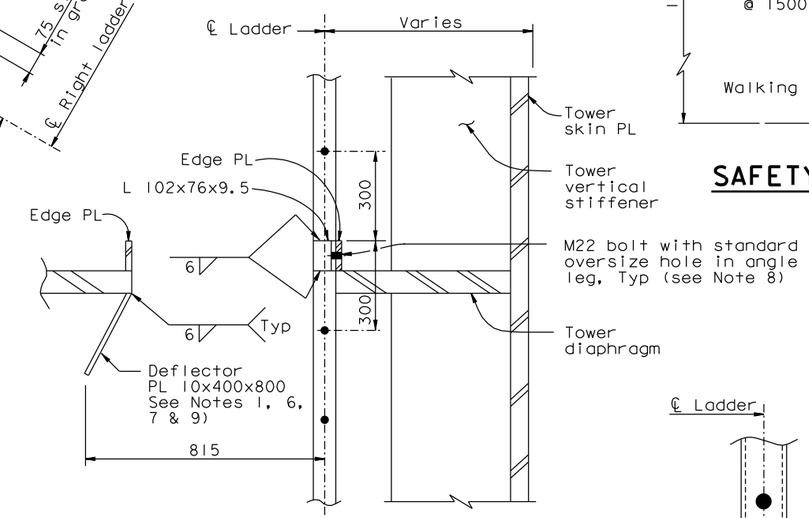

SECTION D-D
1:10

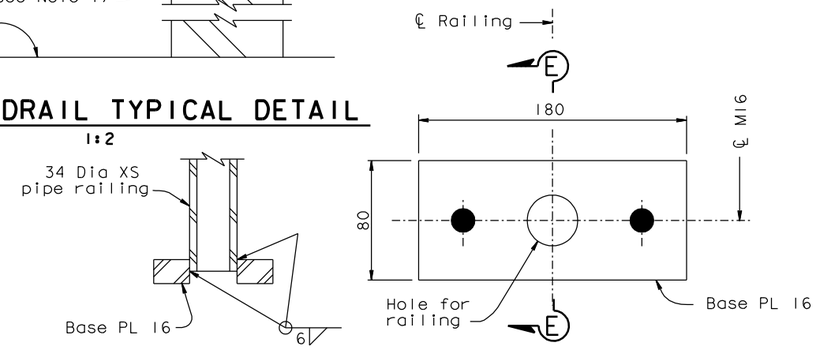

SECTION E-E
PLAN VIEW
RAILING BASE PLATE DETAILS
1:2

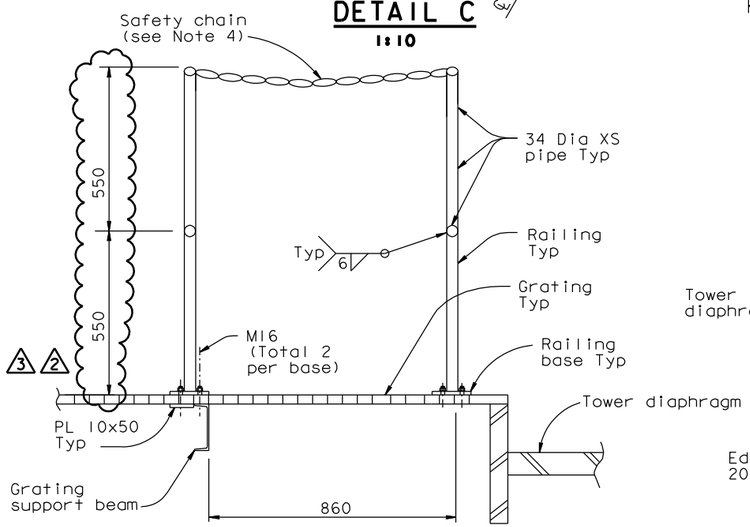

SECTION A-A
1:10

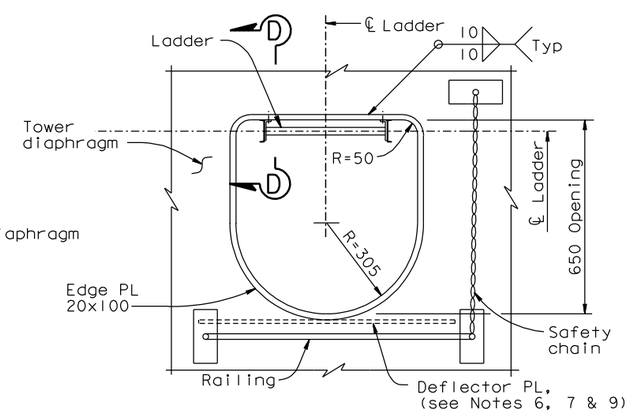

DETAIL E
1:10

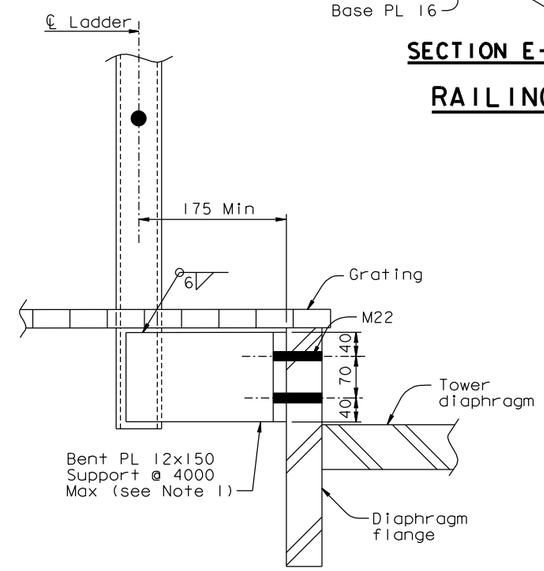

TYPICAL LADDER CONNECTION TO DIAPHRAGM FLANGE
SECTION B-B
1:5
(SECTION C-C similar)

NOTES:

1. The Contractor shall detail typical connections to fit the supporting structure, and may submit alternative designs for review and approval of the Engineer.
2. For tower diaphragm dimensions, see "Tower Diaphragm Details" sheets.
3. For ladder details not shown, see "Tower Access Details No. 7" sheet.
4. Safety chain shall be galvanized chain with spring clip end fasteners. Chain and fasteners to be rated at 5 kN (1000 lb) breaking load.
5. Opening in grating and direction of ladder shall alternate as shown on Section B-B on "Tower Access Details No.5" sheet. Railing and safety chain shall enclose opening in grating.
6. Deflector plate may be omitted at the two ladder openings at elevation 9.000 m.
7. Deflector plate may be coped or slotted to clear longitudinal stiffeners.
8. Bolt shall be installed snug-tight prior to load transfer and fully tensioned after load transfer.
9. Deflector plates interfering with diaphragm web access openings at elevation 109.000 m and above shall be omitted.

CONTRACT CHANGE ORDER NO. ____
SHEET ___ OF ___

REQUESTS FOR INFORMATION NOT ADDRESSED IN THIS CCO REMAIN IN FORCE

MARK	DATE	DESCRIPTIONS	BY	CH'D	CCO#
3	12/18/09	HANDRAIL AND PLATFORMS	MN	TH	114
2	06/19/09	HANDRAIL	MN	TH	114
1	07/18/08	TOWER ACCESS	NV	MN	65

REVISIONS

R. Valizadeh/V. Toan/Y.L./W.L./F.C.
DESIGN OVERSIGHT
SIGN OFF DATE 12/18/09

Rev. Date: 5-18-98

DESIGN	BY M. Nader	CHECKED M. Gulyas	
DETAILS	BY G. Baker	CHECKED L. Rus	
QUANTITIES	BY D. Turner	CHECKED J. Leventini	

PREPARED FOR THE STATE OF CALIFORNIA DEPARTMENT OF TRANSPORTATION

ORIGINAL SCALE IN MILLIMETERS FOR REDUCED PLANS 0 10 20 30 40 50 60 70 80 90 100

ALL DIMENSIONS ARE IN MILLIMETERS UNLESS OTHERWISE SHOWN

R. Manzanarez
PROJECT ENGINEER

CU 04
EA 0120F1

BRIDGE NO. 34-0006L/R
KILOMETER POST 13.2/13.9

DISREGARD PRINTS BEARING EARLIER REVISION DATES

REVISION DATES (PRELIMINARY STAGE ONLY): 05/15/99 08/02/99 05/31/01 04/08/02 07/01/02 12/19/02

SAN FRANCISCO OAKLAND BAY BRIDGE
EAST SPAN SEISMIC SAFETY PROJECT
SELF-ANCHORED SUSPENSION BRIDGE
(SUPERSTRUCTURE & TOWER)

TOWER ACCESS DETAILS NO. 8

SHEET 507R3 OF

FILE => I:\bb\04-012001\sas\contract plans and cco\cco\cco#114\7-revision 12-18-09\dgn\akacc08c.dgn

100% PS&E

USERNAME => crivera DATE PLOTTED => 17 DEC 2009 TIME PLOTTED => 10:19:01