DIST.	COUNTY	ROUTE	KILOMETER POST TOTAL PROJECT	SHEET NO.	TOTAL SHEETS
04	SF	80	13.2/13.9	919R4	1204

REGISTERED ENGINEER - CIVIL

12-6-04
PLANS APPROVAL DATE

REGISTERED PROFESSIONAL ENGINEER Marwan N. Nader No. C 054426 Exp. 12/31/11 CIVIL STATE OF CALIFORNIA

The State of California or its officers or agents shall not be responsible for the accuracy or completeness of electronic copies of this plan sheet.

T.Y. LIN / MOFFATT & NICHOL
825 BATTERY STREET
SAN FRANCISCO, CA 94111

Caltrans now has a web site! To get to the web site, go to: http://www.dot.ca.gov

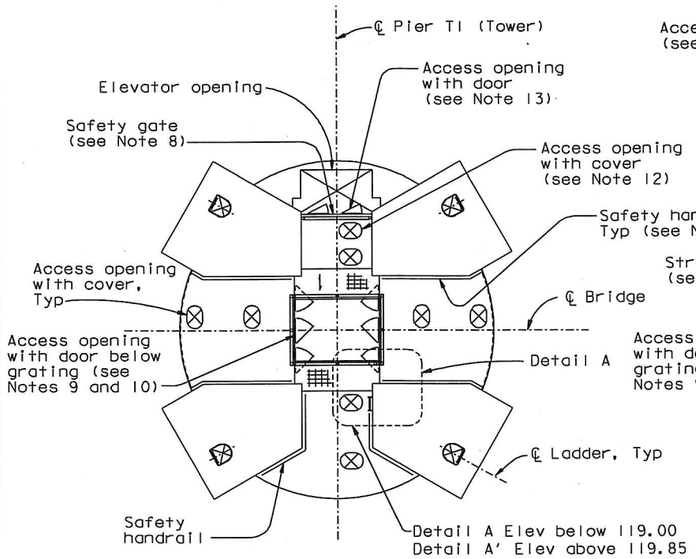

SECTION D-D

NTS

Typical for all tower strut facades UNO in Section E-E. Facade Type A is shown. Type B similar (see Notes 5 and 10)

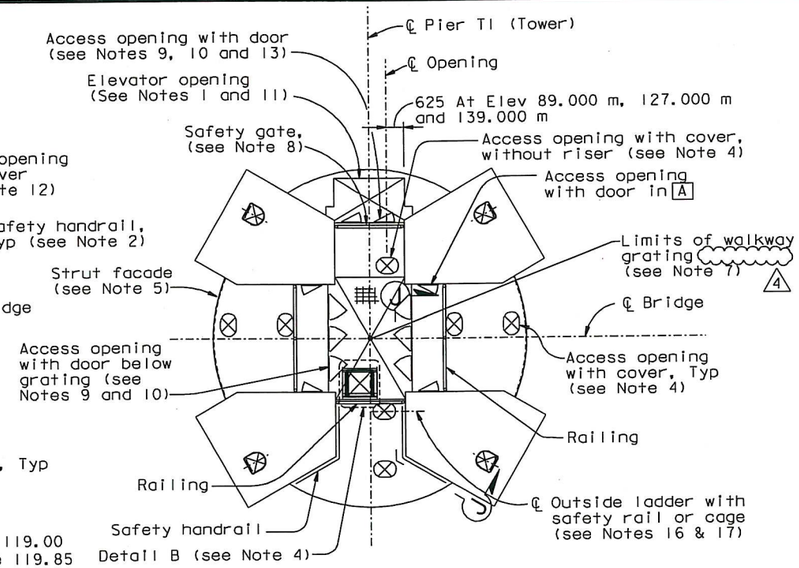

SECTION E-E

NTS

(Shown for tower strut facade corresponding to tower strut at Elev 139.000 m, safety gates and door locations at Elev 53.000 m, 89.000 m and 127.000 m are similar)

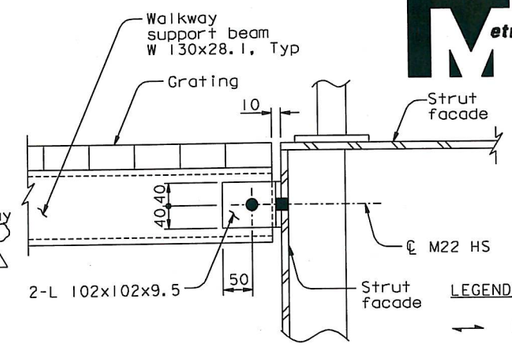

SECTION G-G

1:5

(Section G'-G' similar)

LEGEND:

- Direction of main reinforcement of grating
- Access opening
- A — Tower shaft skin plate A

NOTES:

1. For elevator opening details, see "Tower Strut Facade Details" sheets.
2. For railing and safety handrail details, see "Tower Access Details No. 8" sheet.
3. For ladder details not shown, see "Tower Access Details No. 7" sheet.
4. For Detail B and access cover details, see "Tower Access Details No. 9" sheet. All covers are with risers, unless noted otherwise.
5. For strut facade, see "Tower Strut Facade Details" sheets.
6. Galvanized steel grating with fasteners to be provided by Contractor. Grating working load shall be 4.8 kN/m² (100psf) unless noted otherwise.
7. 4 Walkway grating shall be galvanized steel grating with fasteners to be provided by Contractor. Grating working load shall be 14.8 kN/m² (300psf).
8. For Safety gate details, see "Road Plans" sheets.
9. For access opening and door details, see "Tower Access Details No. 4" sheet. Access openings are without door unless noted otherwise.
10. For location of access openings in strut facade, see "Tower Strut Facade Details" sheets.
11. For location of elevator landing and safety enclosures, see "Tower Elevator Support Details" sheets.
12. This access opening is to be provided in strut facades from elevation 18.000 m to 77.000 m only.
13. These access openings are to be provided between elevation 89.000 m to 143.000 m.
14. For bottom face access opening provide door to swing in. Door shall open clear of obstructions. For other details, see door at vertical face of tower strut facade on "Tower Access Details No. 4" sheet.
15. The Contractor shall provide ladders inside the front facades to align with the exterior ladder segments. Ladder do not penetrate the strut facade plates.
16. At locations where ladder lengths exceed 6.5 meters, contraction joints shall be provided. Ladder length is defined as the distance between the centerlines of the top and bottom end supports. Contraction joints shall be located below ladder supports unless noted otherwise. For contraction joint details, see "Tower Access Details No. 7" sheet.
17. Ladder supports shall be spaced at 6 meters maximum.
18. For Section Z-Z and Detail A', see "Tower Access Details No. 3A" sheet.

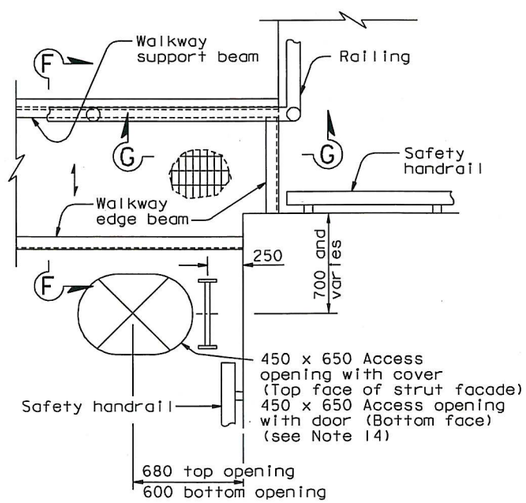

DETAIL A

1:20

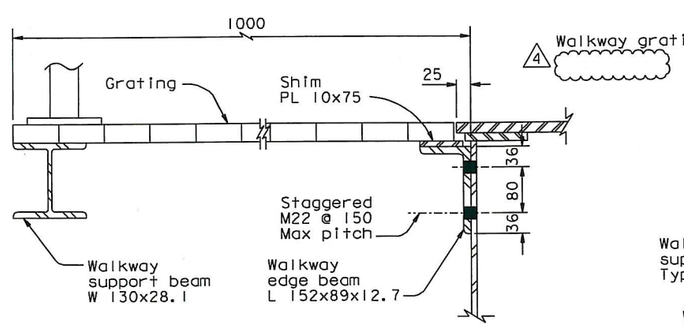

SECTION F-F

1:5

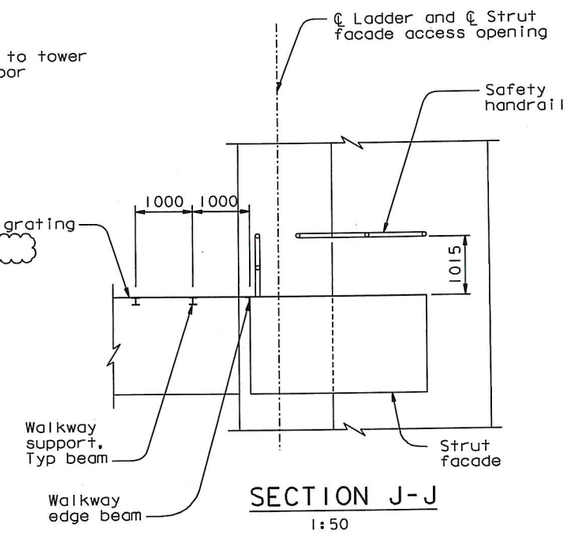

SECTION J-J

1:50

ALL DIMENSIONS ARE IN MILLIMETERS UNLESS OTHERWISE SHOWN

CONTRACT CHANGE ORDER NO. 114
SHEET 2 OF 9

REQUESTS FOR INFORMATION NOT ADDRESSED IN THIS CCO REMAIN IN FORCE

MARK	DATE	DESCRIPTIONS	BY	CH'D	CCO#
4	10/15/10	HANDRAIL AND PLATFORMS	TH	MN	114
3	09/24/10	TOWER STRUT FACADES AND CROSS BRACING	NV	MN	6451
2	07/17/09	ELEVATOR DETAILS	TH	MN	85
1	07/18/08	TOWER ACCESS	NV	MN	65

REVISIONS

R. Valizadeh/V. Toan/Y.L./W.L./F.C.
DESIGN OVERSIGHT
Roya Valizadeh / Vong Toan / Y. Liu
SIGN OFF DATE 10/15/10

Rev. Date: 5-18-98

DESIGN	BY M. Nader	CHECKED M. Gulyas	
DETAILS	BY G. Baker	CHECKED L. Rus	
QUANTITIES	BY D. Turner	CHECKED J. Leventini	

PREPARED FOR THE STATE OF CALIFORNIA DEPARTMENT OF TRANSPORTATION

ORIGINAL SCALE IN MILLIMETERS FOR REDUCED PLANS 0 10 20 30 40 50 60 70 80 90 100

R. Manzanarez
PROJECT ENGINEER

BRIDGE NO. 34-0006L/R
KILOMETER POST 13.2/13.9

CU 04
EA 0120F1

DISREGARD PRINTS BEARING EARLIER REVISION DATES

REVISION DATES (PRELIMINARY STAGE ONLY) 05/17/99 09/07/99 05/17/01 04/06/02 07/24/02 12/19/02

SHEET 502R4 OF

SAN FRANCISCO OAKLAND BAY BRIDGE
EAST SPAN SEISMIC SAFETY PROJECT
SELF-ANCHORED SUSPENSION BRIDGE
(SUPERSTRUCTURE & TOWER)

TOWER ACCESS DETAILS NO. 3

100% PS&E

FILE => I:\bb\04-012001\sas\contract plans and cco\cco\cco=114\8-revision 10-15-10\dgn\akacc14.dgn

USERNAME => crivera DATE PLOTTED => 15 OCT 2010 TIME PLOTTED => 14:43:55

DIST.	COUNTY	ROUTE	KILOMETER POST TOTAL PROJECT	SHEET NO.	TOTAL SHEETS
04	SF	80	13.2/13.9	924R3	1204

REGISTERED ENGINEER - CIVIL

12-6-04
PLANS APPROVAL DATE

REGISTERED PROFESSIONAL ENGINEER — Marwan N. Nader, No. C 054426, Exp. 12/31/11, CIVIL, STATE OF CALIFORNIA

The State of California or its officers or agents shall not be responsible for the accuracy or completeness of electronic copies of this plan sheet.

T.Y. LIN / MOFFATT & NICHOL
825 BATTERY STREET
SAN FRANCISCO, CA 94111

Caltrans now has a web site! To get to the web site, go to: http://www.dot.ca.gov

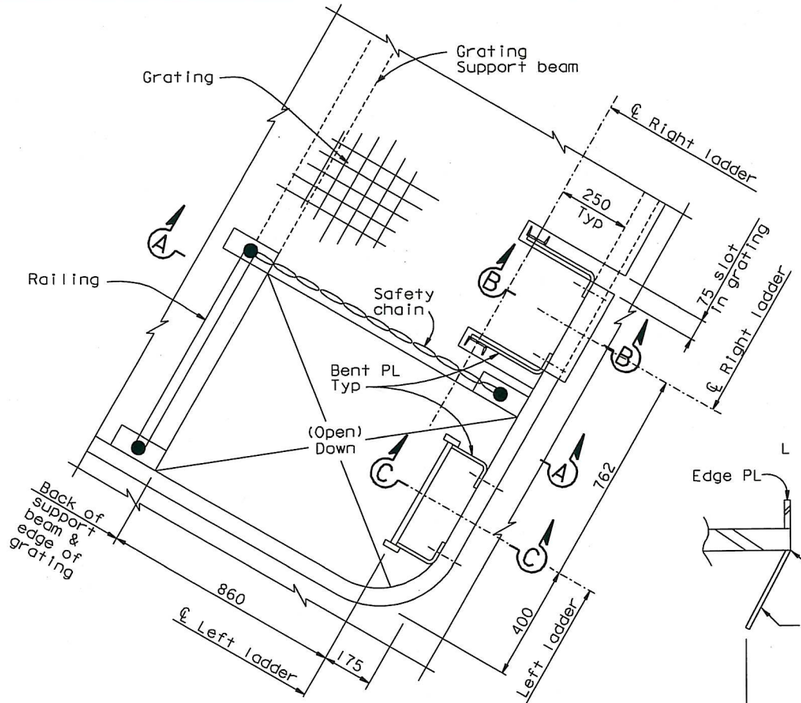

DETAIL C
1:10

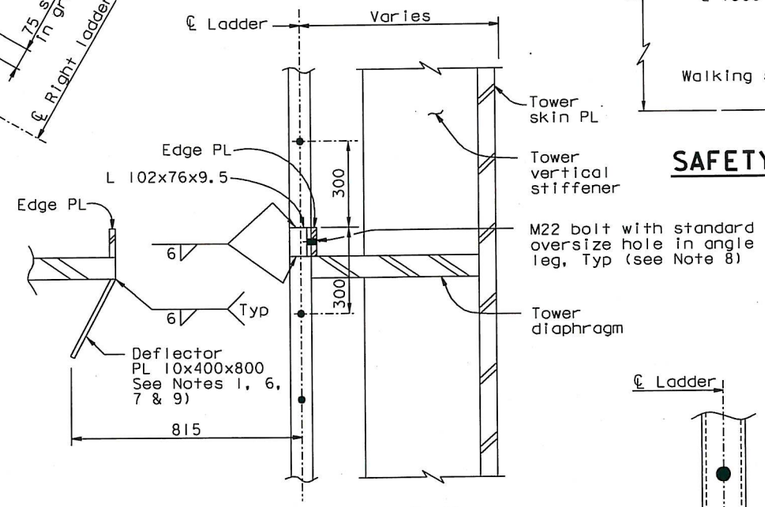

SECTION D-D
1:10

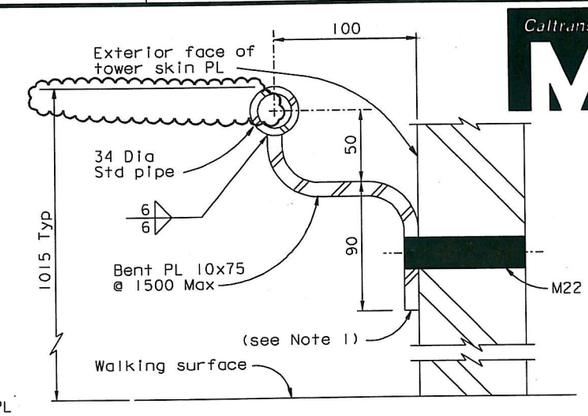

SAFETY HANDRAIL TYPICAL DETAIL
1:2

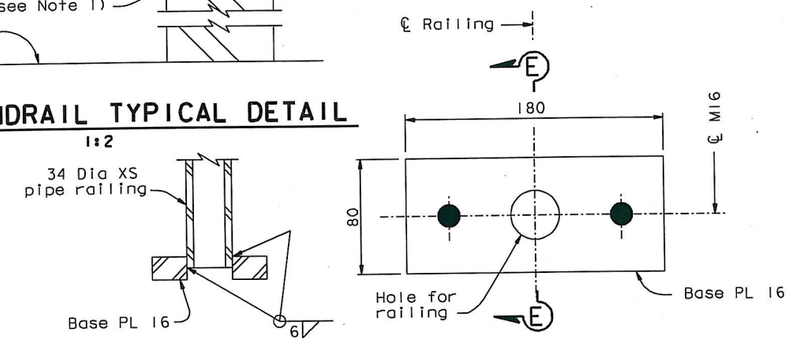

SECTION E-E

PLAN VIEW

RAILING BASE PLATE DETAILS
1:2

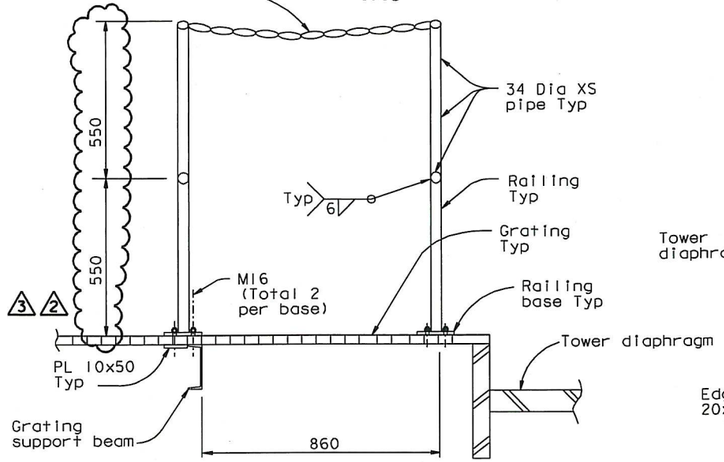

SECTION A-A
1:10

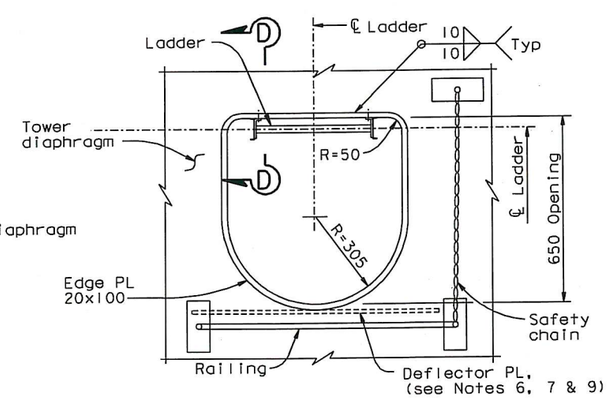

DETAIL E
1:10

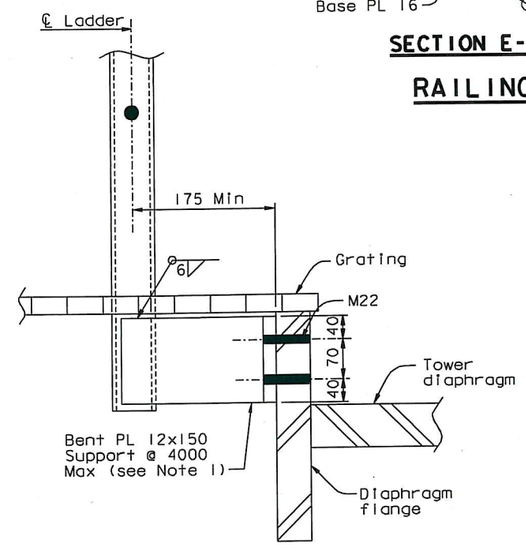

TYPICAL LADDER CONNECTION TO DIAPHRAGM FLANGE
SECTION B-B
1:5
(SECTION C-C similar)

NOTES:

1. The Contractor shall detail typical connections to fit the supporting structure, and may submit alternative designs for review and approval of the Engineer.
2. For tower diaphragm dimensions, see "Tower Diaphragm Details" sheets.
3. For ladder details not shown, see "Tower Access Details No. 7" sheet.
4. Safety chain shall be galvanized chain with spring clip end fasteners. Chain and fasteners to be rated at 5 kN (1000 lb) breaking load.
5. Opening in grating and direction of ladder shall alternate as shown on Section B-B on "Tower Access Details No. 5" sheet. Railing and safety chain shall enclose opening in grating.
6. Deflector plate may be omitted at the two ladder openings at elevation 9.000 m.
7. Deflector plate may be coped or slotted to clear longitudinal stiffeners.
8. Bolt shall be installed snug-tight prior to load transfer and fully tensioned after load transfer.
9. Deflector plates interfering with diaphragm web access openings at elevation 109.000 m and above shall be omitted.

CONTRACT CHANGE ORDER NO. 114
SHEET 3 OF 9

REQUESTS FOR INFORMATION NOT ADDRESSED IN THIS CCO REMAIN IN FORCE

MARK	DATE	DESCRIPTIONS	BY	CH'D	CCO#
3	12/18/09	HANDRAIL AND PLATFORMS	MN	TH	114
2	06/19/09	HANDRAIL	MN	TH	114
1	07/18/08	TOWER ACCESS	NV	MN	65

REVISIONS

R. Valizadeh/V. Toan/Y.L./W.L./F.C.
DESIGN OVERSIGHT
SIGN OFF DATE 12/18/09

Rev. Date: 5-18-98

	BY	CHECKED
DESIGN	M. Nader	M. Gulyas
DETAILS	G. Baker	L. Rus
QUANTITIES	D. Turner	J. Leventini

ORIGINAL SCALE IN MILLIMETERS FOR REDUCED PLANS 0 10 20 30 40 50 60 70 80 90 100

PREPARED FOR THE STATE OF CALIFORNIA DEPARTMENT OF TRANSPORTATION

R. Manzanarez
PROJECT ENGINEER

ALL DIMENSIONS ARE IN MILLIMETERS UNLESS OTHERWISE SHOWN

CU 04
EA 0120F1

BRIDGE NO. 34-0006L/R
KILOMETER POST 13.2/13.9

DISREGARD PRINTS BEARING EARLIER REVISION DATES — REVISION DATES (PRELIMINARY STAGE ONLY) 05/15/99 08/02/99 05/14/01 04/08/02 07/01/02 12/19/02

SHEET 507R3 OF

SAN FRANCISCO OAKLAND BAY BRIDGE
EAST SPAN SEISMIC SAFETY PROJECT
SELF-ANCHORED SUSPENSION BRIDGE
(SUPERSTRUCTURE & TOWER)

TOWER ACCESS DETAILS NO. 8

100 % PS&E

FILE => I:\bb\04-0120F1\sas\contract plans and cco\cco\cco#114\7-revision 12-18-09\dgn\akacc08c.dgn

USERNAME => arivera DATE PLOTTED => 17 DEC 2009 TIME PLOTTED => 10:19:01

DIST.	COUNTY	ROUTE	KILOMETER POST TOTAL PROJECT	SHEET NO.	TOTAL SHEETS
04	SF	80	13.2/13.9	926R6	1204

REGISTERED ENGINEER - CIVIL

12-6-04
PLANS APPROVAL DATE

REGISTERED PROFESSIONAL ENGINEER Marwan N. Nader No. C 054426 Exp. 12/31/11 CIVIL STATE OF CALIFORNIA

The State of California or its officers or agents shall not be responsible for the accuracy or completeness of electronic copies of this plan sheet.

T.Y. LIN / MOFFATT & NICHOL
825 BATTERY STREET
SAN FRANCISCO, CA 94111

Caltrans now has a web site! To get to the web site, go to: http://www.dot.ca.gov

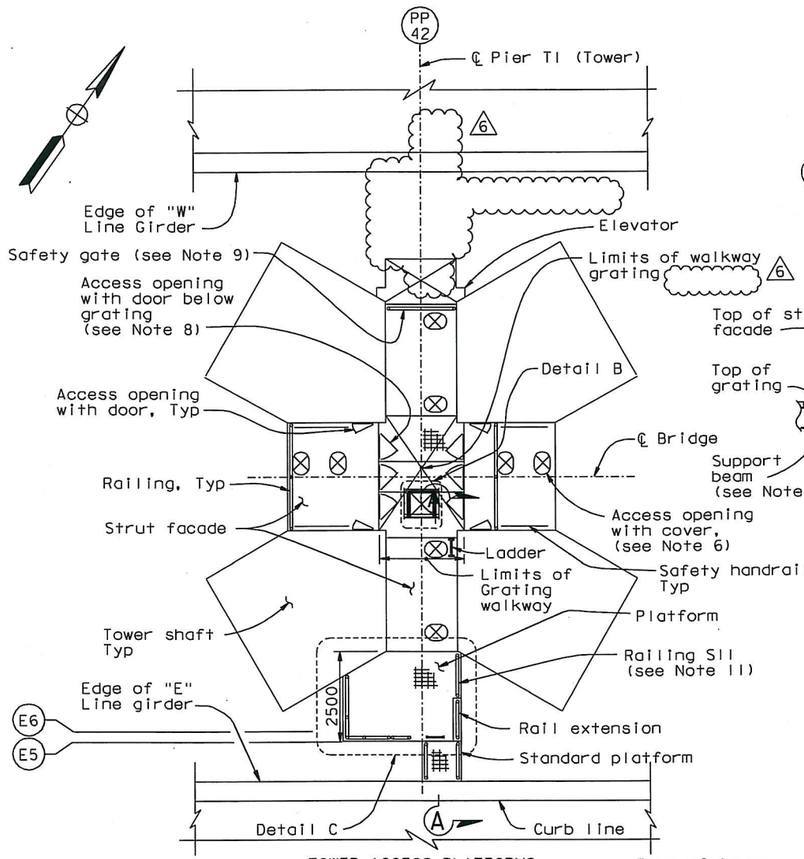

TOWER ACCESS PLATFORMS

SECTION F-F

NTS

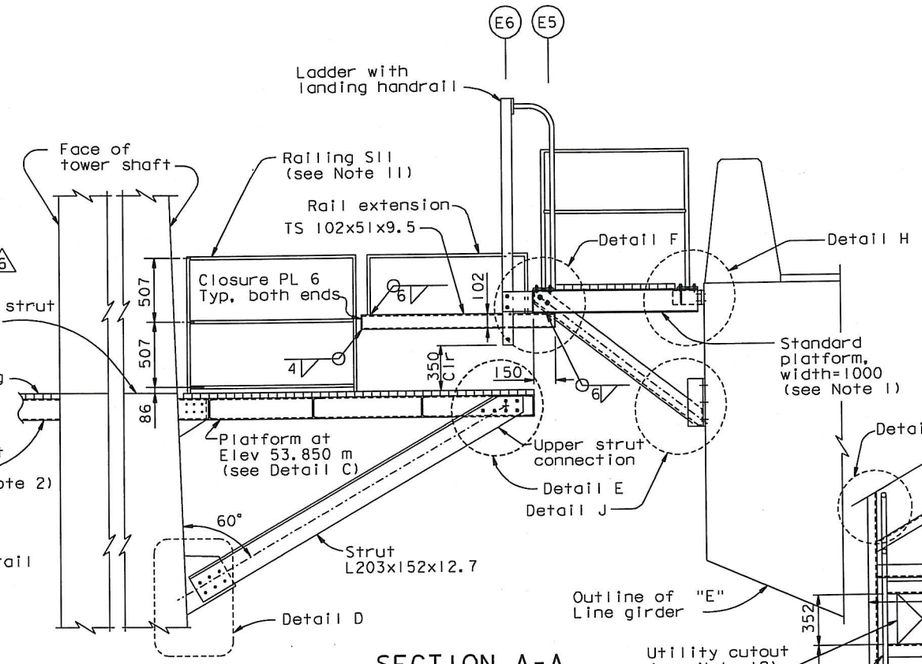

SECTION A-A

1:20

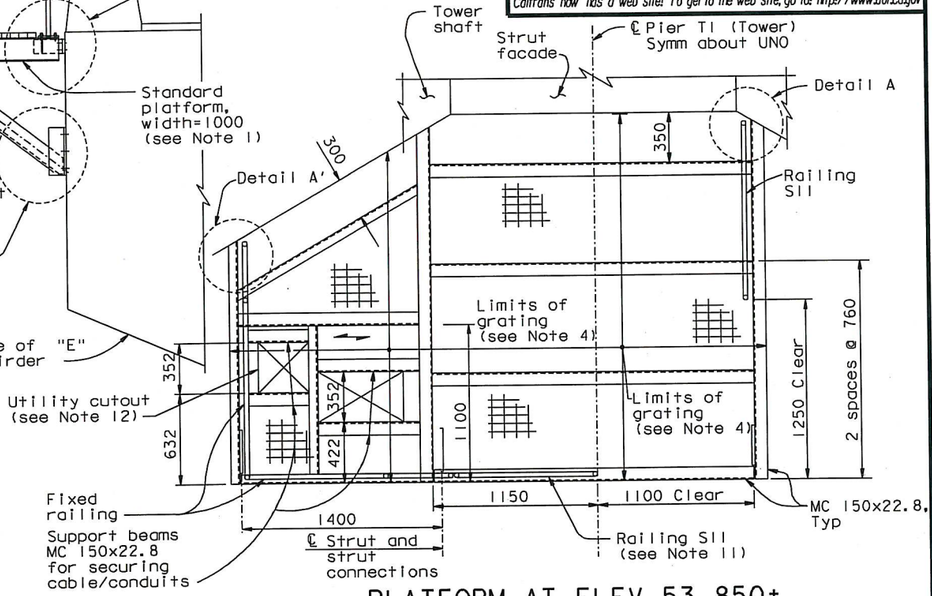

PLATFORM AT ELEV 53.850±

DETAIL C

1:20

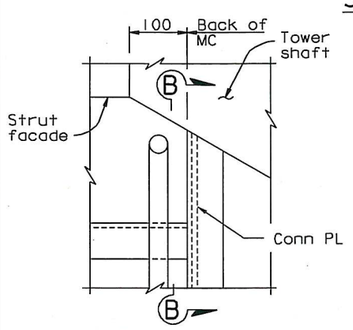

DETAIL A

1:5

(Detail A shown, Detail A' similar)

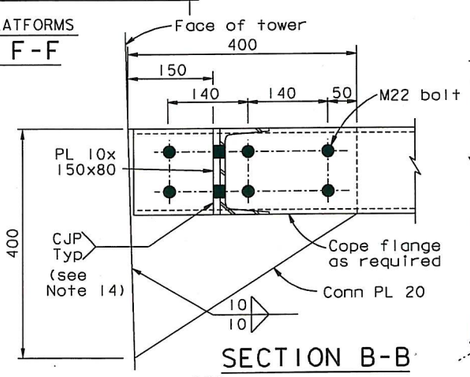

SECTION B-B

1:5

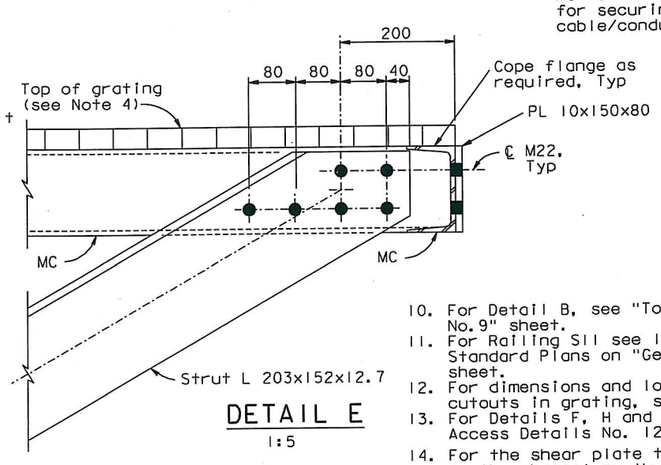

DETAIL E

1:5

LEGEND:

(E6) Girder Working Line 6 on "E" Line.

NOTES:

1. For standard platform details, see "Tower Access Details No.9" sheet.
2. For walkway support beam details, see "Tower Access Details No.3" sheet.
3. For railing details, see "Tower Access Details No.8" sheet.
4. Grating shall be galvanized steel grating with fasteners. Grating working load shall be 14.4 kN/m². (6)
5. For Details D, see "Tower Access Details No. 11" sheet.
6. For access opening cover details, see "Tower Access Details No.9" sheet. All covers are with risers unless noted otherwise.
7. For location of Tower access opening in strut facade, see "Tower Strut Facade Details" sheets.
8. For access opening and door details, see "Tower Access Details No.4" sheet.
9. For safety gate details, see "Road Plans" sheets.
10. For Detail B, see "Tower Access Details No.9" sheet.
11. For Railing S11 see Index to Caltrans Standard Plans on "General Notes No.1" sheet.
12. For dimensions and locations of utility cutouts in grating, see "Road Plans".
13. For Details F, H and J, see "Tower Access Details No. 12" sheet.
14. For the shear plate that is connected to the channel on the front (open) side, a double-sided 6 mm fillet weld may be used. Shear plate shall be connected to channel flanges and web.

CONTRACT CHANGE ORDER NO. 114
SHEET 4 OF 9

REQUESTS FOR INFORMATION NOT ADDRESSED IN THIS CCO REMAIN IN FORCE

MARK	DATE	DESCRIPTIONS	BY	CH'D	CCO#
6	10/15/10	HANDRAIL AND PLATFORMS	TH	MN	114
5	09/24/10	TOWER STRUT FACADES AND CROSS BRACING	NV	MN	64S1
4	09/25/09	HANDRAIL AND PLATFORMS	MN	TH	114
3	06/12/09	HANDRAIL	MN	TH	114
2	08/15/08	TOWER ACCESS	JD	MN	65
1	09/07/07	MECHANICAL MODIFICATIONS	JD	MN	31

REVISIONS

ALL DIMENSIONS ARE IN MILLIMETERS UNLESS OTHERWISE SHOWN

R. Valizadeh/V. Toan/Y.L./W.L./F.C.
DESIGN OVERSIGHT
SIGN OFF DATE 10/15/10

Rev. Date: 5-18-98

	BY	CHECKED	
DESIGN	M. Nader	M. Gulyas	
DETAILS	G. Baker	L. Rus	
QUANTITIES	D. Turner	J. Leventini	

PREPARED FOR THE STATE OF CALIFORNIA DEPARTMENT OF TRANSPORTATION

R. Manzanarez
PROJECT ENGINEER

BRIDGE NO. 34-0006L/R
KILOMETER POST 13.2/13.9

SAN FRANCISCO OAKLAND BAY BRIDGE
EAST SPAN SEISMIC SAFETY PROJECT
SELF-ANCHORED SUSPENSION BRIDGE
(SUPERSTRUCTURE & TOWER)

TOWER ACCESS DETAILS NO. 10

ORIGINAL SCALE IN MILLIMETERS FOR REDUCED PLANS 0 10 20 30 40 50 60 70 80 90 100

CU 04
EA 0120F1

DISREGARD PRINTS BEARING EARLIER REVISION DATES

REVISION DATES (PRELIMINARY STAGE ONLY) 05/23/95 05/27/99 05/24/01 04/08/02 07/09/02 12/19/02

SHEET 509R6 OF

FILE => I:\bb\04-01200I\sas\contract plans and cco\cco\cco#114\8-revision 10-15-10\dgn\akacc09.dgn

USERNAME => crivera DATE PLOTTED => 15 OCT 2010 TIME PLOTTED => 14:33:12

100 % P,S&E

DIST.	COUNTY	ROUTE	KILOMETER POST TOTAL PROJECT	SHEET NO.	TOTAL SHEETS
04	SF	80	13.2/13.9	927R4	1204

REGISTERED ENGINEER - CIVIL

12-6-04
PLANS APPROVAL DATE

REGISTERED PROFESSIONAL ENGINEER
Marwan N. Nader
No. C 54426
Exp. 12/31/11
CIVIL
STATE OF CALIFORNIA

The State of California or its officers or agents shall not be responsible for the accuracy or completeness of electronic copies of this plan sheet.

T.Y. LIN / MOFFATT & NICHOL
825 BATTERY STREET
SAN FRANCISCO, CA 94111

Caltrans now has a web site! To get to the web site, go to: http://www.dot.ca.gov

Caltrans Metric

4 This Sheet Intentionally Left Blank.

CONTRACT CHANGE ORDER NO. 114
SHEET 5 OF 9

REQUESTS FOR INFORMATION NOT ADDRESSED IN THIS CCO REMAIN IN FORCE

MARK	DATE	DESCRIPTIONS	BY	CH'D	CCO#
4	10/22/10	HANDRAIL AND PLATFORMS	MN	TH	114
3	07/24/09	HANDRAIL AND PLATFORMS	MN	TH	114
2	06/12/09	HANDRAIL	MN	TH	114
1	02/01/08	MECHANICAL MODIFICATIONS	TH	MN	31

REVISIONS

R. Valizadeh/V. Toan/Y.L./W.L./F.C.
DESIGN OVERSIGHT
Roger Valizadeh / Vong Toan / Y. Liu
SIGN OFF DATE 10/22/10

Rev. Date: 5-18-98

DESIGN	BY M. Nader	CHECKED	N. Vo
DETAILS	BY G. Baker	CHECKED	N. Vo
QUANTITIES	BY G. Baker	CHECKED	N. Vo

ORIGINAL SCALE IN MILLIMETERS FOR REDUCED PLANS 0 10 20 30 40 50 60 70 80 90 100

PREPARED FOR THE STATE OF CALIFORNIA DEPARTMENT OF TRANSPORTATION

ALL DIMENSIONS ARE IN MILLIMETERS UNLESS OTHERWISE SHOWN

R. Manzanarez
PROJECT ENGINEER

BRIDGE NO. 34-0006L/R
KILOMETER POST 13.2/13.9

CU 04
EA 0120F1

SAN FRANCISCO OAKLAND BAY BRIDGE
EAST SPAN SEISMIC SAFETY PROJECT
SELF-ANCHORED SUSPENSION BRIDGE
(SUPERSTRUCTURE & TOWER)

TOWER ACCESS DETAILS NO. 11

DISREGARD PRINTS BEARING EARLIER REVISION DATES
REVISION DATES (PRELIMINARY STAGE ONLY) 04/08/02 07/01/02 12/19/02

SHEET 510R4 OF

100 % PS&E

USERNAME => dwinrow DATE PLOTTED => 20 OCT 2010 TIME PLOTTED => 14:02:04

FILE => L:\BB\04-012001\SAS\Contract Plans and CCO\CCO\CCO#114\9-Revision 10-22-10\DGN\akacclib.dgn

DIST.	COUNTY	ROUTE	KILOMETER POST TOTAL PROJECT	SHEET NO.	TOTAL SHEETS
04	SF	80	13.2/13.9	928R4	1204

REGISTERED ENGINEER - CIVIL

12-6-04
PLANS APPROVAL DATE

REGISTERED PROFESSIONAL ENGINEER
Marwan N. Nader
No. C 054426
Exp. 12/31/11
CIVIL
STATE OF CALIFORNIA

The State of California or its officers or agents shall not be responsible for the accuracy or completeness of electronic copies of this plan sheet.

T.Y. LIN / MOFFATT & NICHOL
825 BATTERY STREET
SAN FRANCISCO, CA 94111

Caltrans now has a web site! To get to the web site, go to: http://www.dot.ca.gov

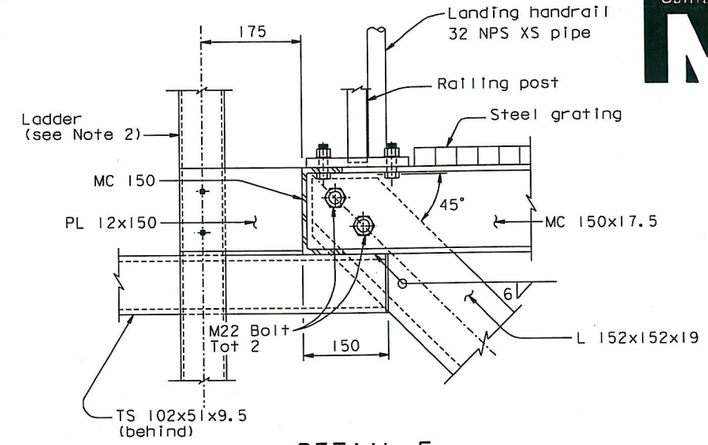

DETAIL F
1:5

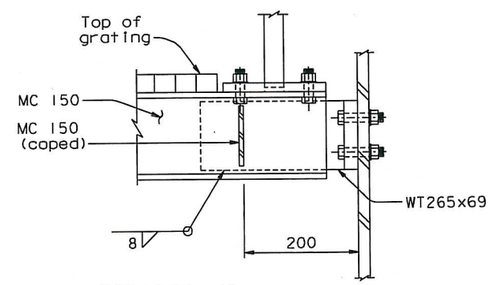

DETAIL H
1:5

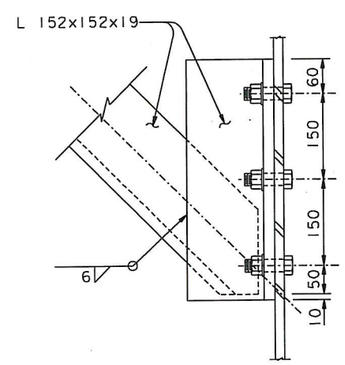

DETAIL J
1:5

RAMP IN STORED POSITION
1:15

NOTES:

1. For railing base plate details, see "Tower Access Details No.8" sheet.
2. For ladder attachment details not shown, see similar "Typical Ladder Connection to Tower Face" on "Tower Access Details No. 7" sheet.
3. Landing handrails are connected to the steel grating. Contractor shall detail typical connection to fit the supporting structure and may submit alternate designs for Engineer's approval.

100 % PS&E

CONTRACT CHANGE ORDER NO. 114
SHEET 6 OF 9

REQUESTS FOR INFORMATION NOT ADDRESSED IN THIS CCO REMAIN IN FORCE

MARK	DATE	DESCRIPTIONS	BY	CH'D	CCO#
4	10/22/10	HANDRAIL AND PLATFORMS	MN	TH	114
3	07/24/09	HANDRAIL AND PLATFORMS	MN	TH	114
2	06/12/09	HANDRAIL	MN	TH	114
1	04/07/08	MECHANICAL MODIFICATIONS	JD	MN	31

REVISIONS

R. Valizadeh/V. Toan/Y.L./W.L./F.C.
DESIGN OVERSIGHT
SIGN OFF DATE 10/22/10

Rev. Date: 5-18-98

	BY	CHECKED
DESIGN	M. Nader	N. Vo
DETAILS	G. Baker	N. Vo
QUANTITIES	G. Baker	N. Vo

ORIGINAL SCALE IN MILLIMETERS FOR REDUCED PLANS 0 10 20 30 40 50 60 70 80 90 100

PREPARED FOR THE STATE OF CALIFORNIA DEPARTMENT OF TRANSPORTATION

R. Manzanarez
PROJECT ENGINEER

CU 04
EA 0120F1

ALL DIMENSIONS ARE IN MILLIMETERS UNLESS OTHERWISE SHOWN

BRIDGE NO. 34-0006L/R
KILOMETER POST 13.2/13.9

DISREGARD PRINTS BEARING EARLIER REVISION DATES

REVISION DATES (PRELIMINARY STAGE ONLY) 04/20/02 07/19/02 12/19/02

SHEET 511R4 OF

SAN FRANCISCO OAKLAND BAY BRIDGE
EAST SPAN SEISMIC SAFETY PROJECT
SELF-ANCHORED SUSPENSION BRIDGE
(SUPERSTRUCTURE & TOWER)

TOWER ACCESS DETAILS NO. 12

FILE => I:\bb\04-0120F1\sas\contract plans and cco\cco\cco#114\9-revision 10-22-10\dgn\akacc12b.dgn

USERNAME => dwinrow DATE PLOTTED => 20 OCT 2010 TIME PLOTTED => 14:02:35

DIST.	COUNTY	ROUTE	KILOMETER POST TOTAL PROJECT	SHEET NO.	TOTAL SHEETS
04	SF	80	13.2/13.9	939R2	1204

George Baker
REGISTERED ENGINEER - CIVIL
12-6-04
PLANS APPROVAL DATE

REGISTERED PROFESSIONAL ENGINEER George S. Baker No. C 57112 Exp. 12/31/05 CIVIL STATE OF CALIFORNIA

The State of California or its officers or agents shall not be responsible for the accuracy or completeness of electronic copies of this plan sheet.

T.Y. LIN / MOFFATT & NICHOL
825 BATTERY STREET
SAN FRANCISCO, CA 94111

Caltrans now has a web site! To get to the web site, go to: http://www.dot.ca.gov

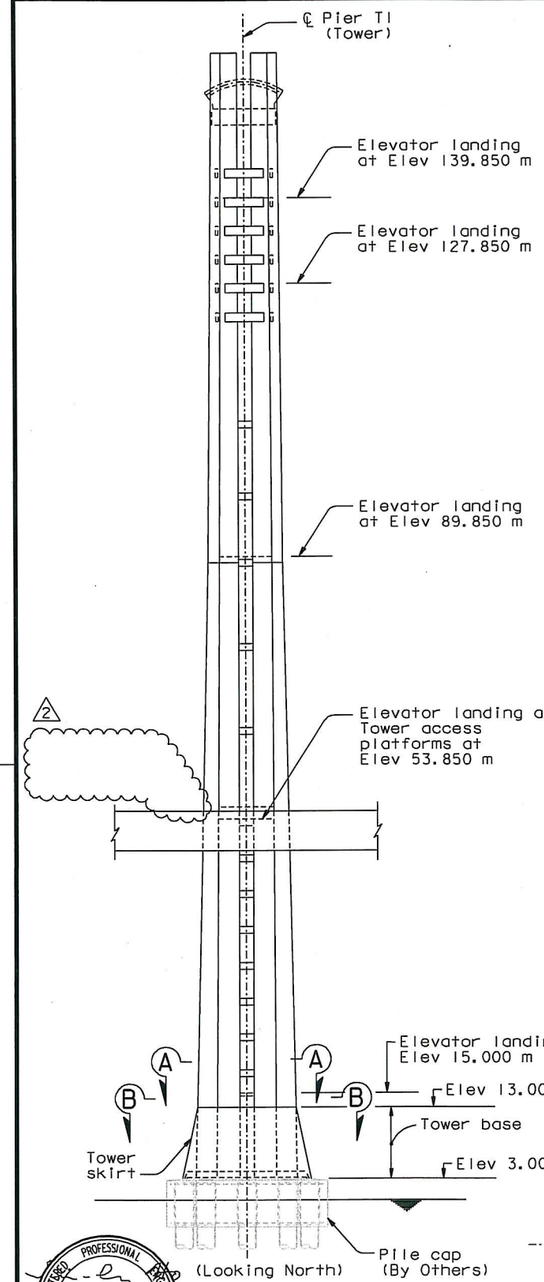

ELEVATION
1:400

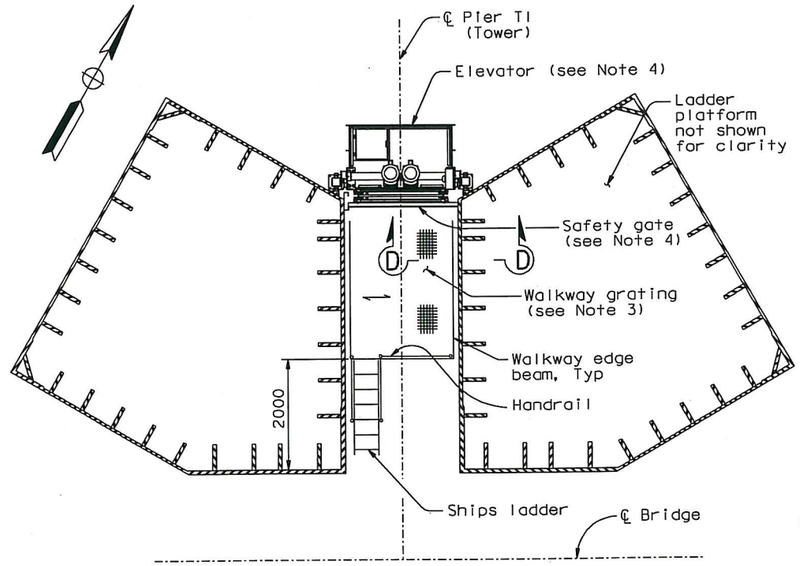

PARTIAL PLAN AT 15.000 M
SECTION A-A
1:50

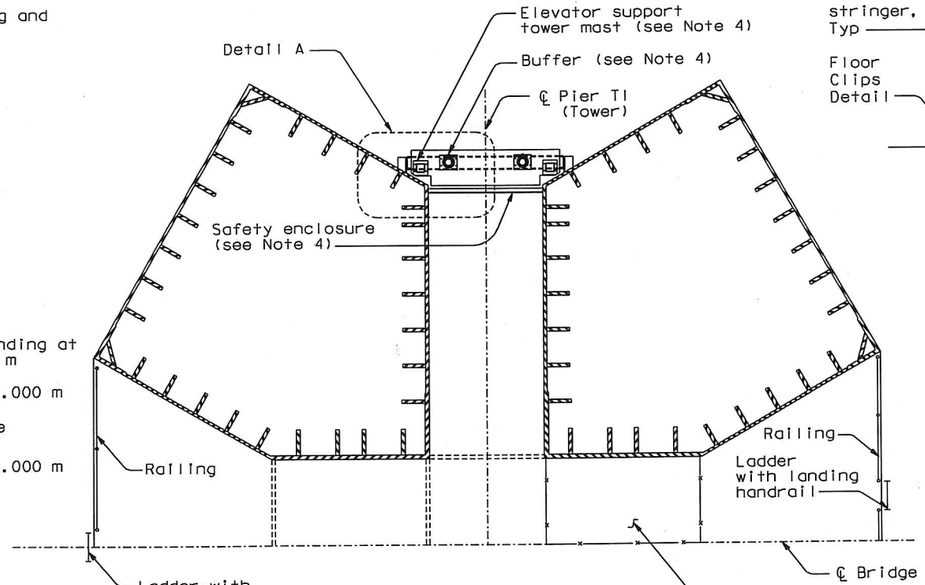

PARTIAL PLAN AT 13.000 M
SECTION B-B
1:50

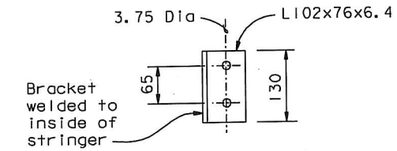

MOUNTING BRACKET DETAIL

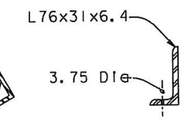

FLOOR CLIPS DETAIL

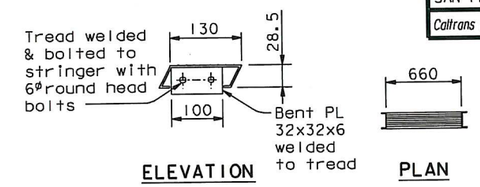

ELEVATION

PLAN

TREAD DETAIL

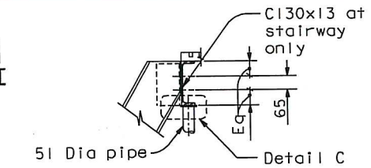

DETAIL B

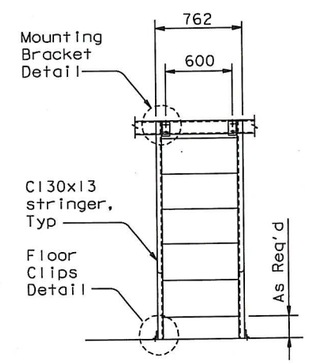

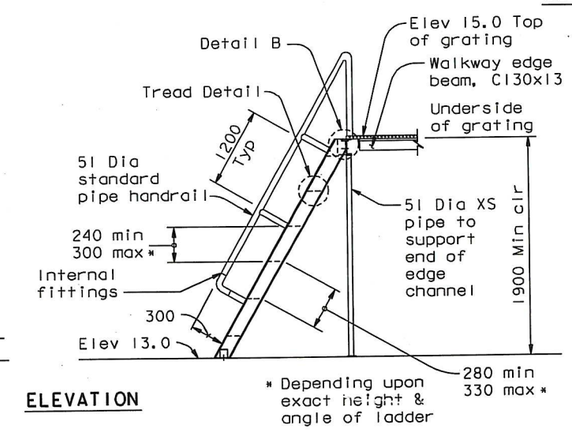

ELEVATION

SHIPS LADDER DETAILS
1:25

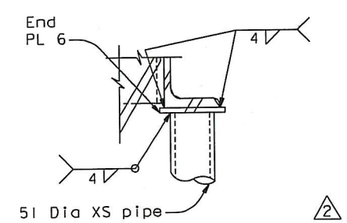

DETAIL C

NOTES:

1. For elevator landing details at elevations 139.850 and 89.850, see "Tower Access Details No.3" sheet.
2. For ladder and landing handrail details, see "Tower Access Details No.7" sheet. For railing details, see Tower Access Details No.8" sheet.
3. Gratings at elevation 15.00 shall have a working load of 7 kN/m (145psf).
4. For elevator and elevator appurtenances, see "Road Plans" sheets.
5. (NOTE DELETED)
6. For elevator landing details at elevation 53.850, see "Tower Access Details No.10" sheet.
7. For Detail A, Section C-C and Section D-D, see "Tower Elevator Support Details No.2" sheet.

REGISTERED PROFESSIONAL ENGINEER Tien Hung Ho No. C 43990 Exp. 06/30/11 CIVIL STATE OF CALIFORNIA

FOR REVISIONS ONLY

CONTRACT CHANGE ORDER NO. 114
SHEET 7 OF 9

REQUESTS FOR INFORMATION NOT ADDRESSED IN THIS CCO REMAIN IN FORCE

ALL DIMENSIONS ARE IN MILLIMETERS UNLESS OTHERWISE SHOWN

R. Valizadeh/V. Toan/Y.L./W.L./F.C.
DESIGN OVERSIGHT
SIGN OFF DATE 10/15/10

MARK	DATE	DESCRIPTIONS	BY	CH'D	CCO#
2	10/15/10	HANDRAIL AND PLATFORMS	TH	MN	114
1	07/17/09	ELEVATOR DETAILS	TH	MN	85

REVISIONS

Rev. Date: 5-18-98

DESIGN	BY G. Baker	CHECKED	L. Rus
DETAILS	BY S. Camo	CHECKED	L. Rus
QUANTITIES	BY D. Turner	CHECKED	J. Leventini

PREPARED FOR THE STATE OF CALIFORNIA DEPARTMENT OF TRANSPORTATION

R. Manzanarez
PROJECT ENGINEER

ORIGINAL SCALE IN MILLIMETERS FOR REDUCED PLANS 0 10 20 30 40 50 60 70 80 90 100

CU 04
EA 0120F1

BRIDGE NO. 34-0006L/R
KILOMETER POST 13.2/13.9

DISREGARD PRINTS BEARING EARLIER REVISION DATES 04/08/02 07/09/02 12/19/02 11/13/05

SAN FRANCISCO OAKLAND BAY BRIDGE
EAST SPAN SEISMIC SAFETY PROJECT
SELF-ANCHORED SUSPENSION BRIDGE
(SUPERSTRUCTURE & TOWER)

TOWER ELEVATOR SUPPORT DETAILS NO. 1

SHEET 522R2 OF

100 % PS&E

USERNAME => arivero DATE PLOTTED => 15 OCT 2010 TIME PLOTTED => 14:30:49

FILE => I:\bb\04-012001\sas\contract plans and cco\cco\cco#114\8-revision 10-15-10\dgn\akele01.dgn

DIST.	COUNTY	ROUTE	KILOMETER POST TOTAL PROJECT	SHEET NO.	TOTAL SHEETS
04	SF	80	13.2/13.9	962R2	1204

Caltrans Metric

George Baker
REGISTERED ENGINEER - CIVIL

1-27-03
PLANS APPROVAL DATE

REGISTERED PROFESSIONAL ENGINEER George S. Baker No. C 57112 Exp. 12/31/07 CIVIL STATE OF CALIFORNIA

The State of California or its officers or agents shall not be responsible for the accuracy or completeness of electronic copies of this plan sheet.

T.Y. LIN / MOFFATT & NICHOL
825 BATTERY STREET
SAN FRANCISCO, CA 94111

Caltrans now has a web site! To get to the web site, go to: http://www.dot.ca.gov

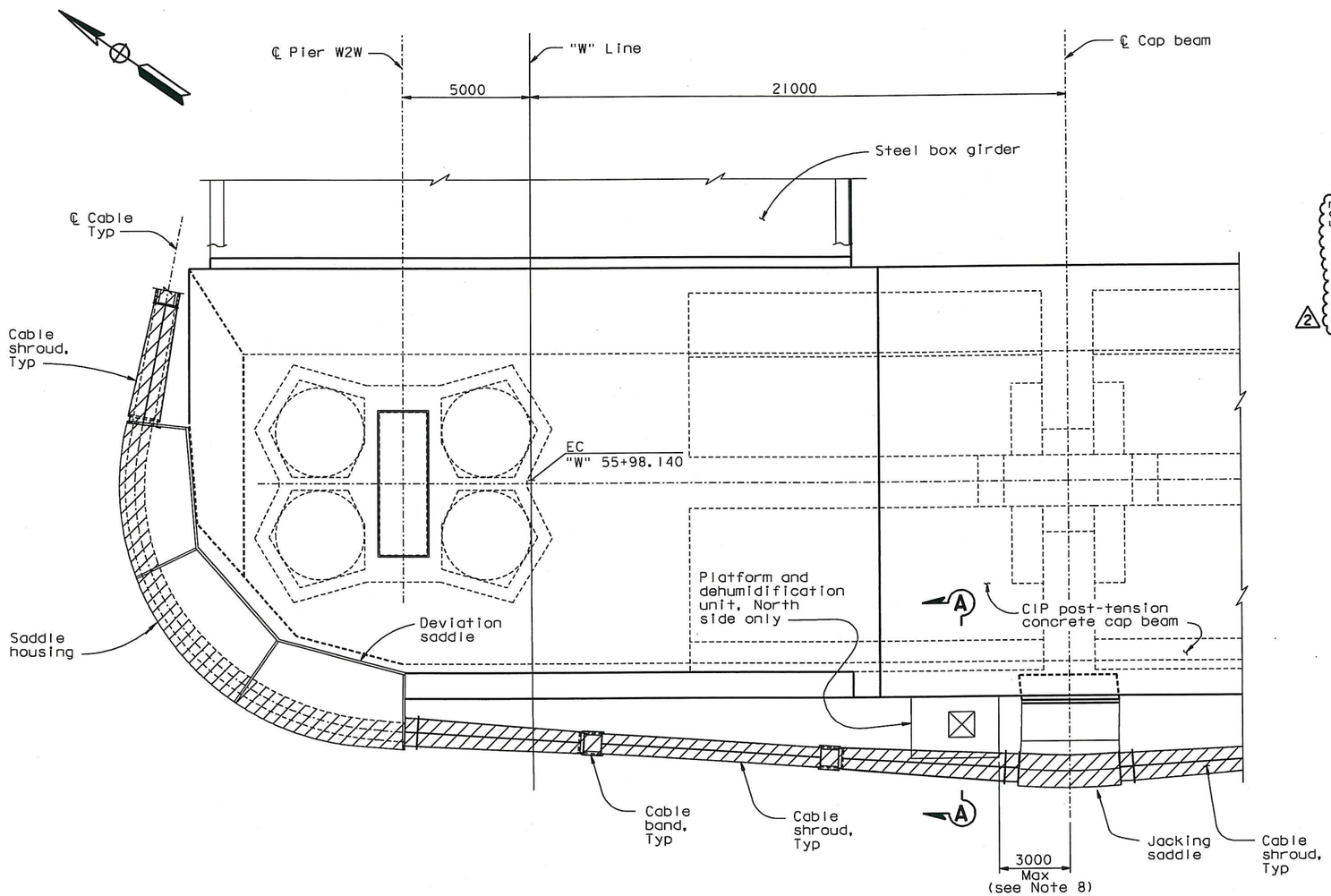

WEST PIER MAIN CABLE ANCHORAGE LAYOUT

DETAIL D

1:100

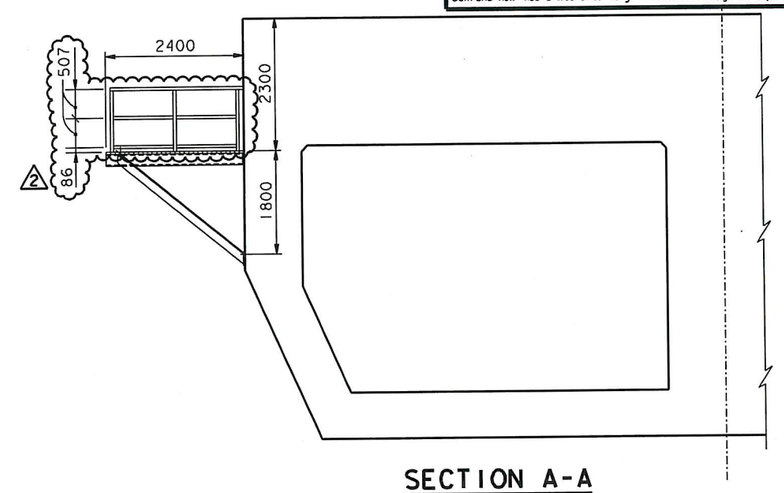

SECTION A-A

1:50

LEGEND:

Limits of dehumidification

Dehumidifier

NOTES:

1. For saddle housings, see "West Deviation Saddle Housing Details" and "West Jacking Saddle Housing Details" sheets.
2. For cable shrouds, see "West Cable Shroud Details" sheets.
3. For Cable bands, see "Cable Band Details" sheets.
4. For cable saddles, see "West Deviation Saddle Details" and "West Jacking Saddle Details" sheets.
5. Duct supports shall preferably be mounted to cable bands and saddles.
6. North side shown. South side similar, unless noted otherwise.
7. For dehumidification platform details, see "Dehumidification Support Details No. 7" sheet.
8. At the option of the Contractor the location of the platform may vary transversely to satisfy his means and methods.

REGISTERED PROFESSIONAL ENGINEER Tien Hung Ho No. C 43990 Exp. 06/30/11 CIVIL STATE OF CALIFORNIA

FOR REVISIONS ONLY

CONTRACT CHANGE ORDER NO. 114
SHEET 8 OF 9

REQUESTS FOR INFORMATION NOT ADDRESSED IN THIS CCO REMAIN IN FORCE

ALL DIMENSIONS ARE IN MILLIMETERS UNLESS OTHERWISE SHOWN

R. Valizadeh/V. Toan/Y.L./W.L./F.C.
DESIGN OVERSIGHT
Reza Valizadeh / Vong Toan / Y. Liu
SIGN OFF DATE 06/12/09

MARK	DATE	DESCRIPTIONS	BY	CH'D	CCO#
2	06/12/09	HANDRAIL	TH	GB	114
1	07/21/06	W2 CAP BEAM ISD	GB	NV	23

REVISIONS

	BY	CHECKED
DESIGN	G. Baker	T. Ho
DETAILS	C. Mauch	T. Ho
QUANTITIES	C. Mauch	D. Harrison

PREPARED FOR THE STATE OF CALIFORNIA DEPARTMENT OF TRANSPORTATION

R. Manzanarez
PROJECT ENGINEER

BRIDGE NO. 34-0006L/R
KILOMETER POST 13.2/13.9

CU 04
EA 0120F1

SAN FRANCISCO OAKLAND BAY BRIDGE
EAST SPAN SEISMIC SAFETY PROJECT
SELF-ANCHORED SUSPENSION BRIDGE
(SUPERSTRUCTURE & TOWER)

DEHUMIDIFICATION SUPPORT DETAILS NO. 6

DISREGARD PRINTS BEARING EARLIER REVISION DATES

REVISION DATES (PRELIMINARY STAGE ONLY) 04/08/02 07/21/02 12/19/02

SHEET 545R2 OF

Rev. Date: 5-18-98

ORIGINAL SCALE IN MILLIMETERS FOR REDUCED PLANS 0 10 20 30 40 50 60 70 80 90 100

FILE => I:\bb\04-012001\sas\contract plans and cco\cco\cco#114\3-revision 06-12-09\dgn\akdeh06.dgn

100 % PS&E

DATE PLOTTED => 09 JUN 2009 TIME PLOTTED => 11:48:33

USERNAME => ptom

DIST.	COUNTY	ROUTE	KILOMETER POST TOTAL PROJECT	SHEET NO.	TOTAL SHEETS
04	SF	80	13.2/13.9	963R1	1204

George Baker
REGISTERED ENGINEER - CIVIL
1-27-03
PLANS APPROVAL DATE

REGISTERED PROFESSIONAL ENGINEER George S. Baker No. C 57112 Exp. 12/31/05 CIVIL STATE OF CALIFORNIA

The State of California or its officers or agents shall not be responsible for the accuracy or completeness of electronic copies of this plan sheet.

T.Y. LIN / MOFFATT & NICHOL
825 BATTERY STREET
SAN FRANCISCO, CA 94111

Caltrans now has a web site! To get to the web site, go to: http://www.dot.ca.gov

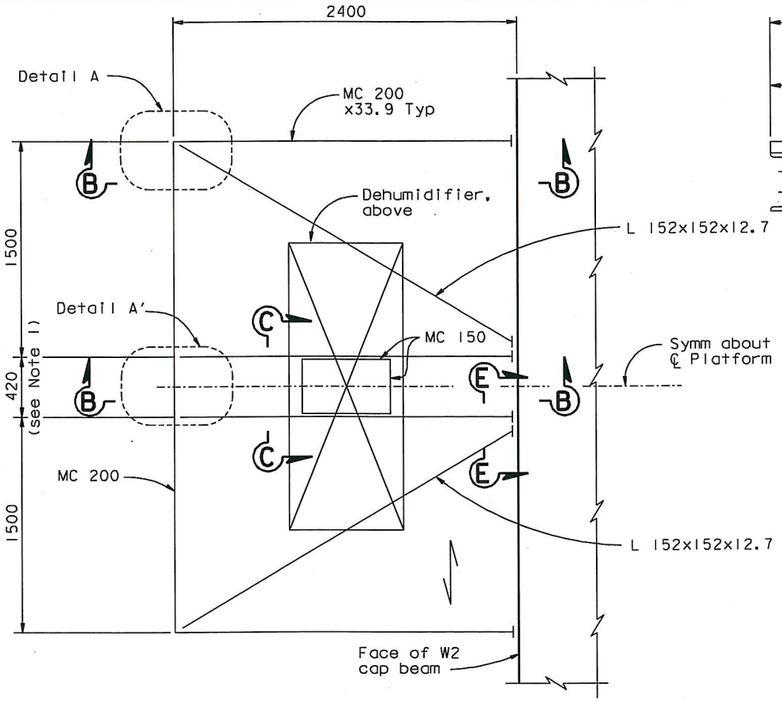

FRAMING PLAN OF DEHUMIDIFICATION PLATFORM
1:20

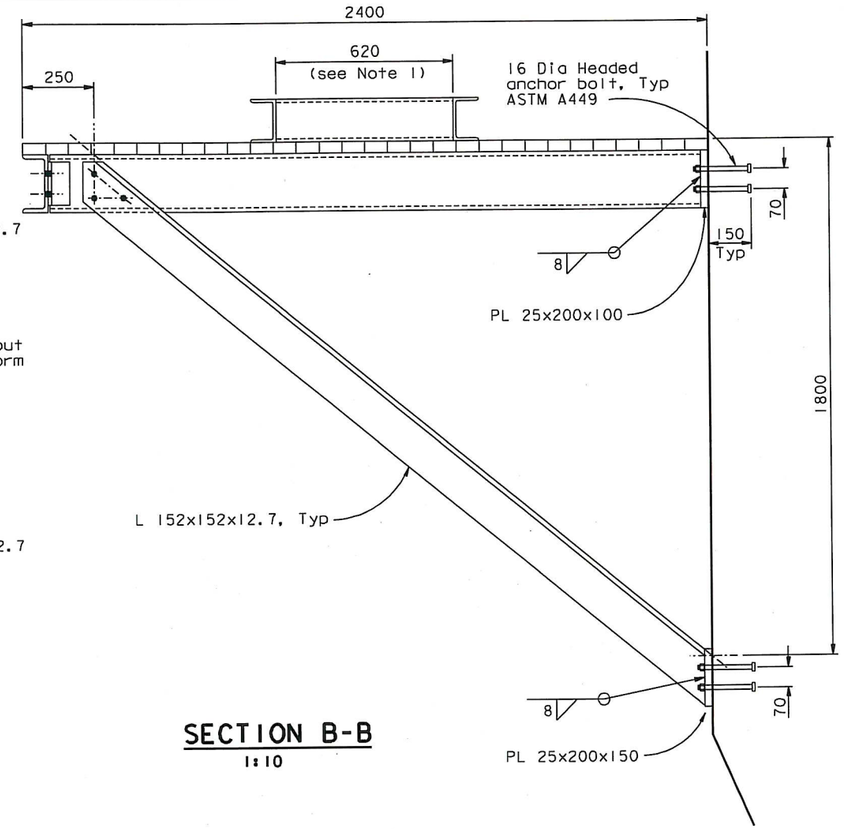

SECTION B-B
1:10

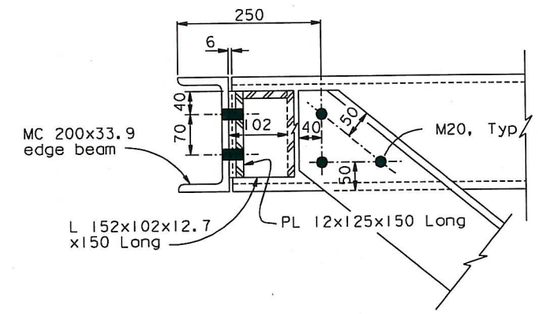

SECTION D-D
1:5

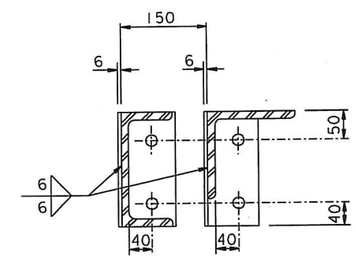

SECTION E-E
1:5

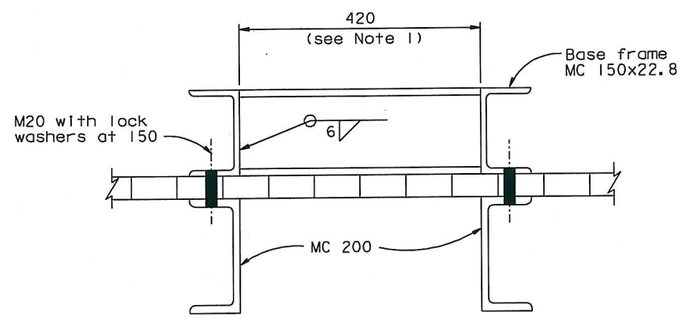

SECTION C-C
1:5

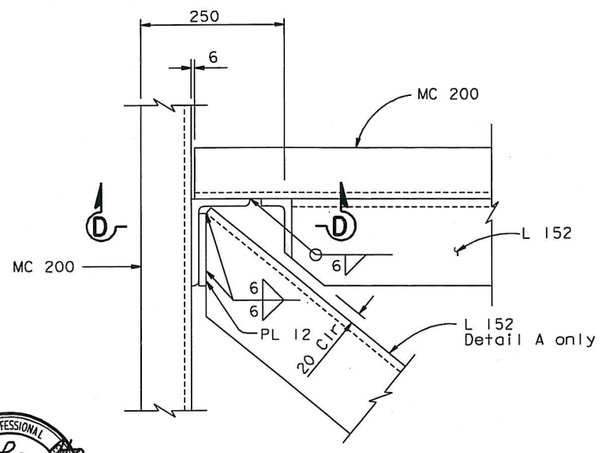

DETAIL A (Detail A' similar)
1:5

NOTES:

1. Base frames, support beams and fasteners shall be detailed to fit the dehumidifier.
2. Galvanized steel grating with fasteners to be provided by contractor. Grating working load shall be 7.0 kN/m² (145 psf).
3. For hand rail detail see, "Dehumidification Support Details No.6" sheet.

REGISTERED PROFESSIONAL ENGINEER Tien Hung Ho No. C 43990 Exp. 06/30/11 CIVIL STATE OF CALIFORNIA

FOR REVISIONS ONLY

CONTRACT CHANGE ORDER NO. 114
SHEET 9 OF 9

REQUESTS FOR INFORMATION NOT ADDRESSED IN THIS CCO REMAIN IN FORCE

ALL DIMENSIONS ARE IN MILLIMETERS UNLESS OTHERWISE SHOWN

MARK	DATE	DESCRIPTIONS	BY	CH'D	CCO#
1	06/12/09	HANDRAIL	TH	GB	114

REVISIONS

R. Valizadeh/V. Toan/Y.L./W.L./F.C.
DESIGN OVERSIGHT
SIGN OFF DATE 06/12/09

	BY	CHECKED
DESIGN	G. Baker	T. Ho
DETAILS	C. Mauch	T. Ho
QUANTITIES	C. Mauch	D. Harrison

PREPARED FOR THE STATE OF CALIFORNIA DEPARTMENT OF TRANSPORTATION

R. Manzanarez
PROJECT ENGINEER

BRIDGE NO. 34-0006L/R
KILOMETER POST 13.2/13.9

SAN FRANCISCO OAKLAND BAY BRIDGE
EAST SPAN SEISMIC SAFETY PROJECT
SELF-ANCHORED SUSPENSION BRIDGE
(SUPERSTRUCTURE & TOWER)

DEHUMIDIFICATION SUPPORT DETAILS NO. 7

Rev. Date: 5-18-98

ORIGINAL SCALE IN MILLIMETERS FOR REDUCED PLANS 0 10 20 30 40 50 60 70 80 90 100

CU 04
EA 0120F1

DISREGARD PRINTS BEARING EARLIER REVISION DATES 04/08/02 07/01/02 12/19/02

REVISION DATES (PRELIMINARY STAGE ONLY)

SHEET 546R1 OF

FILE => I:\bb\04-012001\sas\contract plans and cco\cco\cco#114\3-revision 06-12-09\dgn\akdeh07.dgn

100 % PS&E

DATE PLOTTED => 09 JUN 2009 TIME PLOTTED => 14:49:30

USERNAME => ptom