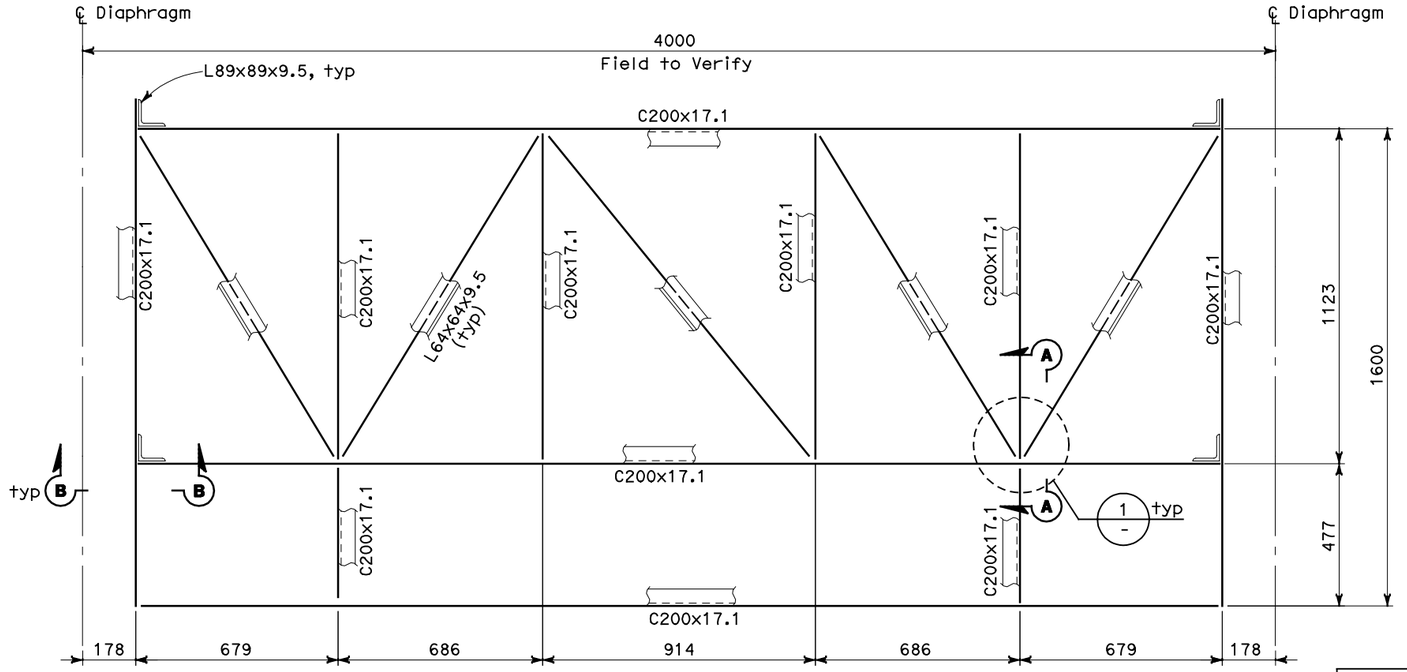

NOTES:

1. Structural steel - ASTM A36.
2. High strength steel bolts - ASTM A325.
3. Concrete anchors - anchor bodies shall be zinc plated in accordance w/ ASTM B633, SC1, Type 1. The expansion clip is fabricated from ASTM A240, Grade 316 stainless steel. The washer conforms to ASTM F844. The hex nut conforms to ASTM A563, Grade A.
4. Electrodes - AWS A5.1, E70XX.
5. All structural steel shall be Hot-dip galvanized after fabrication.

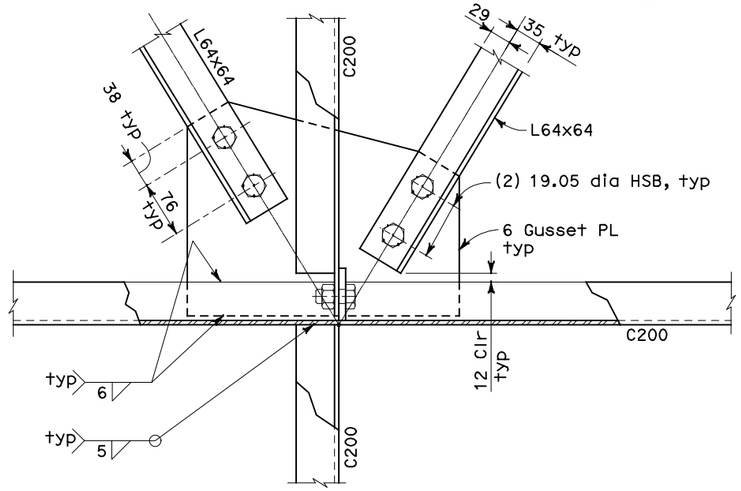

TYP BRACING CONNECTION

DETAIL 1 (-)

SCALE: 1:4

TYPE *

PLAN

SCALE: 1:10

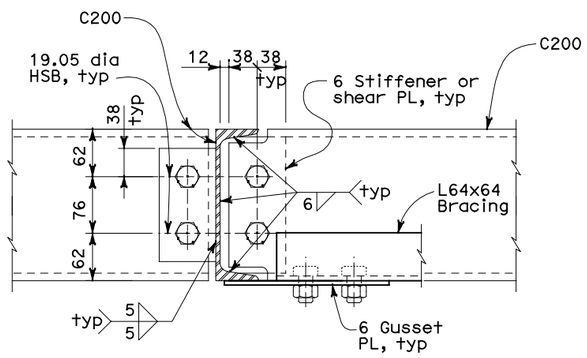

TYP CHANNEL TO CHANNEL CONNECTION

SECTION A (-)

SCALE: 1:4

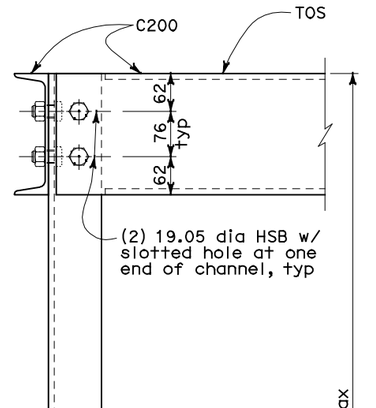

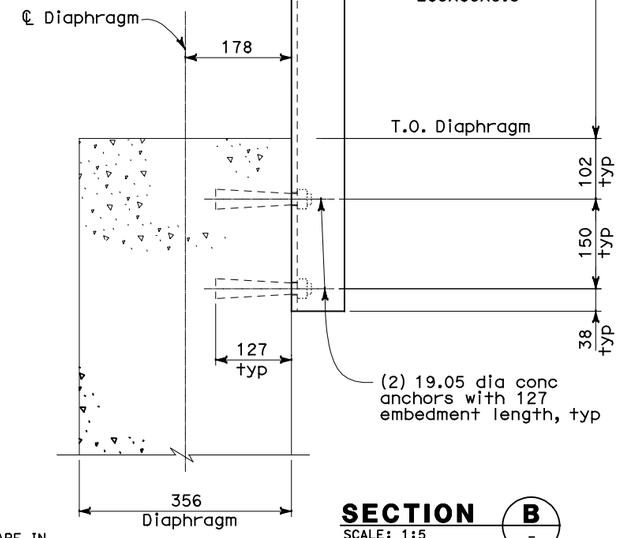

SECTION B (-)

SCALE: 1:5

ALL DIMENSIONS ARE IN MILLIMETERS UNLESS OTHERWISE SHOWN

DIST	COUNTY	ROUTE	KILOMETER POST TOTAL PROJECT	SHEET No	TOTAL SHEETS
04	SF,Ala	80	12.2/14.3 0.0/4.0	86 S22	1204

REGISTERED CIVIL ENGINEER — DATE 03/08/10

05-06-2010
PLANS APPROVAL DATE

REGISTERED PROFESSIONAL ENGINEER — Mee Shing Owyang — No. 24960 — Exp. 12/31/11 — CIVIL — STATE OF CALIFORNIA

PB AMERICAS, Inc.
A Parsons Brinckerhoff Company
303 Second St., Suite 700N
San Francisco, CA 94107-1317

The State of California or its officers or agents shall not be responsible for the accuracy or completeness of electronic copies of this plan sheet.

Caltrans now has a web site! To get to the web site, go to http://www.dot.ca.gov

REQUEST FOR INFORMATION NOT ADDRESSED IN THIS CCO REMAIN IN FORCE

MARK	DATE	REVISIONS DESCRIPTIONS	BY	CH'D	CCO#
0	03/08/10	MEP INTEGRATION	RG	MSO	110

CONTRACT CHANGE ORDER NO. _____
SHEET _____ OF _____

DESIGN	BY M. S. OWYANG	CHECKED R. Garcia	
DETAILS	BY E. CANTILLER	CHECKED	
QUANTITIES	BY	CHECKED	

Bob Zandipour
DESIGN OVERSIGHT

SIGN OFF DATE

PREPARED FOR THE STATE OF CALIFORNIA DEPARTMENT OF TRANSPORTATION

Brady Nadell
PROJECT ENGINEER

CU 04251
EA 0120F1

BRIDGE NO. 34-0006
KILOMETER POST SF 12.2/ ALA 4.0

SKYWAY STRUCTURE

SPLICE CABLE TRAY SUPPORT-TYPE I — AS-20

DESIGN DETAIL SHEET (METRIC) (REV. 3/1/98)

ORIGINAL SCALE IN MILLIMETERS FOR REDUCED PLANS 0 10 20 30 40 50 60 70 80 90 100

DISREGARD PRINTS BEARING EARLIER REVISION DATES →

REVISION DATES (PRELIMINARY STAGE ONLY)

SHEET OF

FILE => 04-0120f1_086S22.dgn

USERNAME => lloricco DATE PLOTTED => 06-MAY-2010 TIME PLOTTED => 13:48

DIST	COUNTY	ROUTE	KILOMETER POST TOTAL PROJECT	SHEET No	TOTAL SHEETS
04	SF, Ala	80	12.2/14.3 0.0/4.0	86 S23	1204

REGISTERED CIVIL ENGINEER — 03/08/10 DATE

05-06-2010
PLANS APPROVAL DATE

REGISTERED PROFESSIONAL ENGINEER — Mee Shing Owyang — No. 24960 — Exp. 12/31/11 — CIVIL — STATE OF CALIFORNIA

PB AMERICAS, Inc.
A Parsons Brinckerhoff Company
303 Second St., Suite 700N
San Francisco, CA 94107-1317

The State of California or its officers or agents shall not be responsible for the accuracy or completeness of electronic copies of this plan sheet.

Caltrans now has a web site! To get to the web site, go to http://www.dot.ca.gov

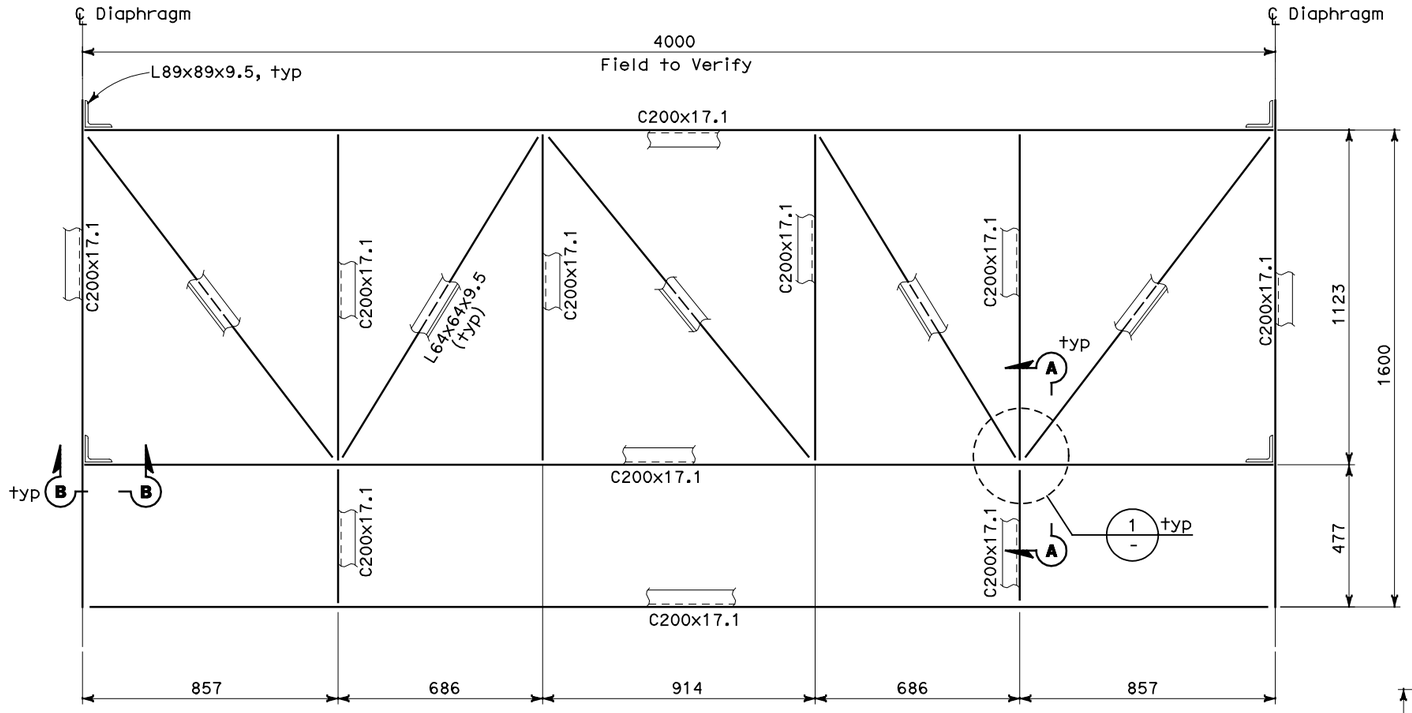

TYPE **

PLAN
SCALE: 1:10

NOTES:

1. Structural steel - ASTM A36.
2. High strength steel bolts - ASTM A325.
3. Concrete anchors - anchor bodies shall be zinc plated in accordance w/ ASTM B633, SC1, Type 1. The expansion clip is fabricated from ASTM A240, Grade 316 stainless steel. The washer conforms to ASTM F844. The hex nut conforms to ASTM A563, Grade A.
4. Electrodes - AWS A5.1, E70XX.
5. All structural steel shall be Hot-dip galvanized after fabrication.

REQUEST FOR INFORMATION NOT ADDRESSED IN THIS CCO REMAIN IN FORCE					
0	03/08/10	MEP INTEGRATION	RG	MSO	110
MARK	DATE	DESCRIPTIONS	BY	CH'D	CCO#
		REVISIONS			

CONTRACT CHANGE ORDER NO._____
SHEET _____ OF _____

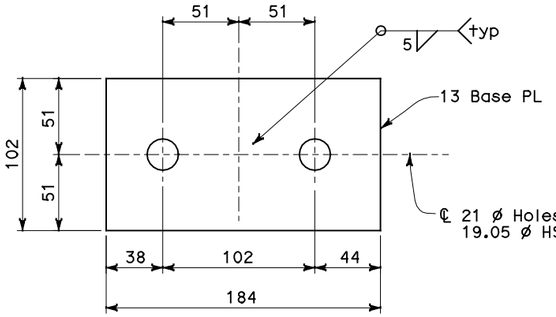

SECTION C
SCALE: 1:2

SECTION B
SCALE: 1:5

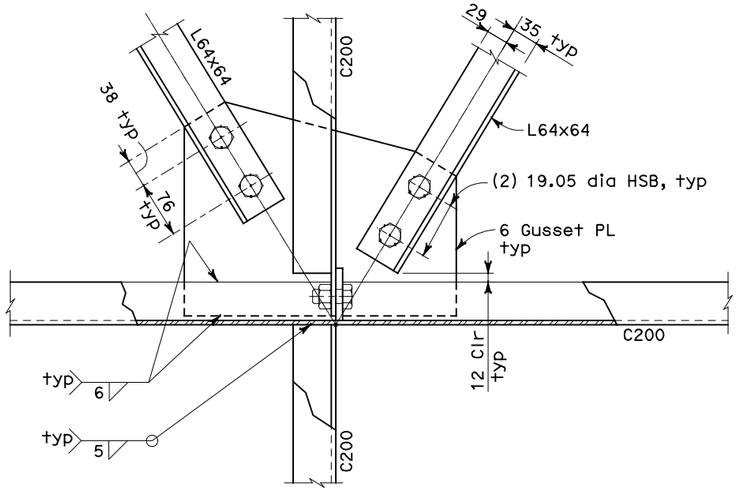

TYP BRACING CONNECTION

DETAIL 1
SCALE: 1:4

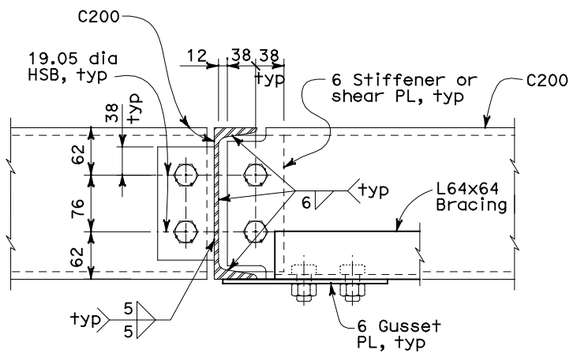

TYP CHANNEL TO CHANNEL CONNECTION

SECTION A
SCALE: 1:4

ALL DIMENSIONS ARE IN MILLIMETERS UNLESS OTHERWISE SHOWN

Bob Zandipour DESIGN OVERSIGHT		DESIGN	BY M. S. OWYANG	CHECKED R. Garcia	PREPARED FOR THE STATE OF CALIFORNIA DEPARTMENT OF TRANSPORTATION
SIGN OFF DATE		DETAILS	BY E. CANTILLER	CHECKED	Brady Nadell PROJECT ENGINEER
DESIGN DETAIL SHEET (METRIC) (REV. 3/1/98)		QUANTITIES	BY	CHECKED	CU 04251 EA 0120F1

BRIDGE NO.	SKYWAY STRUCTURE	
34-0006	SPLICE CABLE TRAY SUPPORT-TYPE II	AS-21
KILOMETER POST SF 12.2/ ALA 4.0		

ORIGINAL SCALE IN MILLIMETERS FOR REDUCED PLANS 0 10 20 30 40 50 60 70 80 90 100

DISREGARD PRINTS BEARING EARLIER REVISION DATES →

REVISION DATES (PRELIMINARY STAGE ONLY) | SHEET | OF

FILE => 04-0120f1_086S23.dgn

USERNAME => \\lorico DATE PLOTTED => 06-MAY-2010 TIME PLOTTED => 19:49

DIST	COUNTY	ROUTE	KILOMETER POST TOTAL PROJECT	SHEET No	TOTAL SHEETS
04	SF, Ala	80	12.2/14.3 0.0/4.0	407a 06S01	1204

Syn Yee Chin 03/08/10
REGISTERED ELECTRICAL ENGINEER DATE

05-06-2010
PLANS APPROVAL DATE

REGISTERED PROFESSIONAL ENGINEER
SYN YEE CHIN
No. 18186
Exp. 09/30/2011
ELECTRICAL
STATE OF CALIFORNIA

PB AMERICAS, Inc.
A Parsons Brinckerhoff Company
303 Second St., Suite 700N
San Francisco, CA 94107-1317

The State of California or its officers or agents shall not be responsible for the accuracy or completeness of electronic copies of this plan sheet.

Caltrans now has a web site! To get to the web site, go to http://www.dot.ca.gov

Caltrans Metric

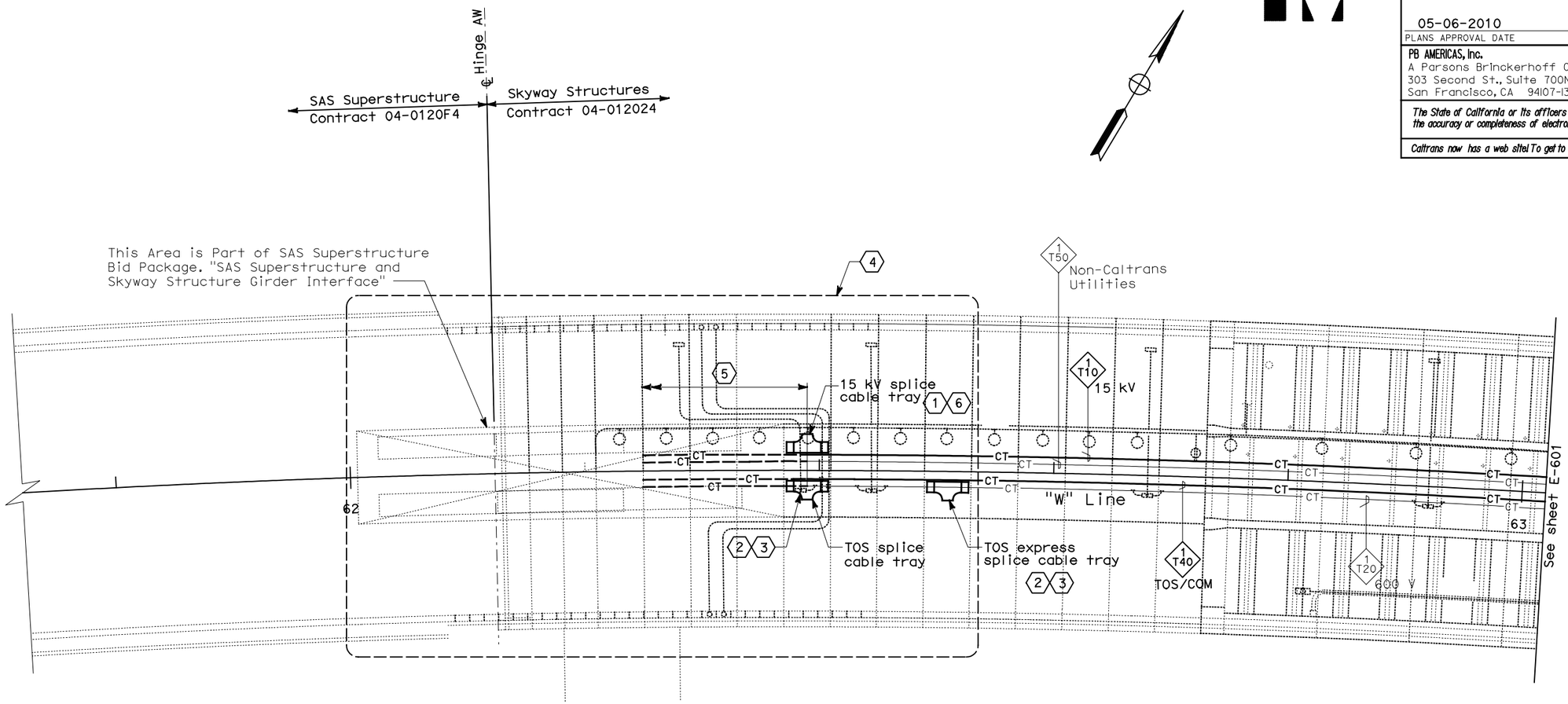

CONDUIT AND CABLE TRAY PLAN

NOTES:

1. This plan sheet is a record drawing from Skyway Structures contract. The Contractor shall verify the existing installation. See sheet EE-61 of Skyway Structures, contract No. 04-012024.
2. The Installed components shall not be limited to the ones listed below, but shall be a complete installation. For details, see Bridge Structures Girder Westbound, typical Details sheets.
   - Furnish and install 15 kV cables into existing cable tray shown on this drawing. Refer to riser diagram on sheets E-664 and E-665.
   - Furnish and install TOS fiber optic cables into existing cable tray shown on this drawing. Refer to riser diagram on sheets E-978 through E-981.
   - Inspect for system ground continuity. See sheets E-666 and E-667.
3. All cable trays shown on this drawing are existing, unless otherwise noted. Bold ones are to be used for pulling cable. See sheet note (5).

SHEET NOTES:

(1) Furnish and install splice cable tray as shown on sheet E-663, plan detail 1.

(2) Furnish and install splice cable tray as shown on sheet E-663, plan detail 2.

(3) Contractor to evaluate possibility of eliminating this TOS splice at this location to meet overall design intent. Refer to TOS drawings for further details.

(4) For Hinge AW area details, see sheet E-637.

(5) Contractor to complete the installation of 15kV, Non-Caltrans Utilities, TOS, and 600V cable trays to facilitate installation of cables.

(6) Contractor to splice 15 kV cables for tie-in with 15 kV cables from SAS Superstructure.

REQUEST FOR INFORMATION NOT ADDRESSED IN THIS CCO REMAIN IN FORCE

MARK	DATE	REVISIONS DESCRIPTIONS	BY	CH'D	CCO#
0	03/08/10	MEP INTEGRATION	SYC	FW	110

CONTRACT CHANGE ORDER NO. _____
SHEET _____ OF _____

BRIDGE STRUCTURES GIRDER WESTBOUND
SKYWAY STRUCTURES
SCALE: 1:200

E-600

LAST REVISION	DATE PLOTTED => 25-MAY-2010
00-00-00	TIME PLOTTED => 11:16

DESIGN OVERSIGHT
BEHZAD GOLEMOHAMMADI

CALCULATED/DESIGNED BY SYC DATE 01/10 REVISED BY
CHECKED BY FW 01/10 DATE REVISED

STATE OF CALIFORNIA - DEPARTMENT OF TRANSPORTATION
Caltrans

THIS PLAN ACCURATE FOR ELECTRICAL WORK ONLY.

ALL DIMENSIONS ARE IN METERS UNLESS OTHERWISE SHOWN

FOR REDUCED PLANS ORIGINAL SCALE IS IN MILLIMETERS 0 20 40 60 80

DGN FILE =>04-0120f1_E-600.dgn
USERNAME =>llorico

CU 04251

EA 0120F1

DIST	COUNTY	ROUTE	KILOMETER POST TOTAL PROJECT	SHEET No	TOTAL SHEETS
04	SF, Ala	80	12.2/14.3 0.0/4.0	407a 06S02	1204

Syn Yee Chin 03/08/10
REGISTERED ELECTRICAL ENGINEER DATE

REGISTERED PROFESSIONAL ENGINEER
SYN YEE CHIN
No. 18186
Exp. 09/30/2011
ELECTRICAL
STATE OF CALIFORNIA

05-06-2010
PLANS APPROVAL DATE

PB AMERICAS, Inc.
A Parsons Brinckerhoff Company
303 Second St., Suite 700N
San Francisco, CA 94107-1317

The State of California or its officers or agents shall not be responsible for the accuracy or completeness of electronic copies of this plan sheet.

Caltrans now has a web site! To get to the web site, go to http://www.dot.ca.gov

Caltrans Metric

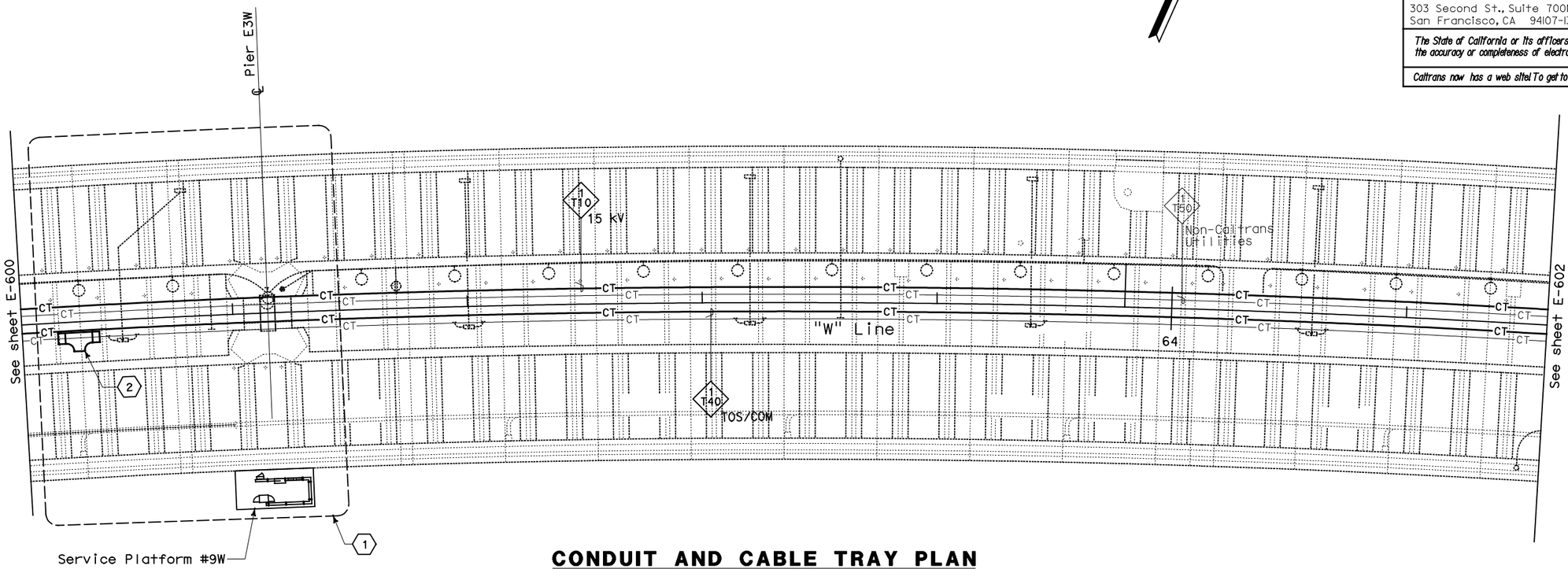

CONDUIT AND CABLE TRAY PLAN

NOTES:

1. This plan sheet is a record drawing from Skyway Structures contract. The Contractor shall verify the existing installation. See sheet EE-62 of Skyway Structures, contract No. 04-012024.
2. The Installed components shall not be limited to the ones listed below, but shall be a complete installation. For details, see Bridge Structures Girder Westbound, typical Details sheets.
   - Furnish and install 15 kV cables into existing cable tray shown on this drawing. Refer to riser diagram on sheets E-664 and E-665.
   - Furnish and install TOS fiber optic cables into existing cable tray shown on this drawing. Refer to riser diagram on sheets E-978 through E-981.
   - Inspect for system ground continuity. See sheets E-666 and E-667.
3. All cable trays shown on this drawing are existing. Bold ones are to be used for pulling cable.

SHEET NOTES:

(1) For Service Platform #9W details, see sheet E-638.

(2) Furnish and install splice cable tray as shown on sheet E-663, plan detail 2.

REQUEST FOR INFORMATION NOT ADDRESSED IN THIS CCO REMAIN IN FORCE

MARK	DATE	DESCRIPTIONS	BY	CH'D	CCO#
		REVISIONS			
0	03/08/10	MEP INTEGRATION	SYC	FW	110

CONTRACT CHANGE ORDER NO._____
SHEET _____ OF _____

BRIDGE STRUCTURES GIRDER WESTBOUND
SKYWAY STRUCTURES
SCALE: 1:200

E-601

DESIGN OVERSIGHT: BEHZAD GOLEMOHAMMADI
CALCULATED/DESIGNED BY: SYC
CHECKED BY: FW
DATE 01/10 REVISED BY
01/10 DATE REVISED

STATE OF CALIFORNIA - DEPARTMENT OF TRANSPORTATION
Caltrans

LAST REVISION 00-00-00
DATE PLOTTED => 25-MAY-2010
TIME PLOTTED => 11:16

THIS PLAN ACCURATE FOR ELECTRICAL WORK ONLY.

ALL DIMENSIONS ARE IN METERS UNLESS OTHERWISE SHOWN

FOR REDUCED PLANS ORIGINAL SCALE IS IN MILLIMETERS 0 20 40 60 80

DGN FILE =>04-0120f1_E-601.dgn
USERNAME =>llorico

CU 04251

EA 0120F1

DIST	COUNTY	ROUTE	KILOMETER POST TOTAL PROJECT	SHEET No	TOTAL SHEETS
04	SF,Ala	80	12.2/14.3 0.0/4.0	407a 06S03	1204

Syn Yee Chin 03/08/10
REGISTERED ELECTRICAL ENGINEER DATE

05-06-2010
PLANS APPROVAL DATE

REGISTERED PROFESSIONAL ENGINEER SYN YEE CHIN No. 18186 Exp. 09/30/2011 ELECTRICAL STATE OF CALIFORNIA

PB AMERICAS, Inc.
A Parsons Brinckerhoff Company
303 Second St., Suite 700N
San Francisco, CA 94107-1317

The State of California or its officers or agents shall not be responsible for the accuracy or completeness of electronic copies of this plan sheet.

Caltrans now has a web site! To get to the web site, go to http://www.dot.ca.gov

Caltrans Metric

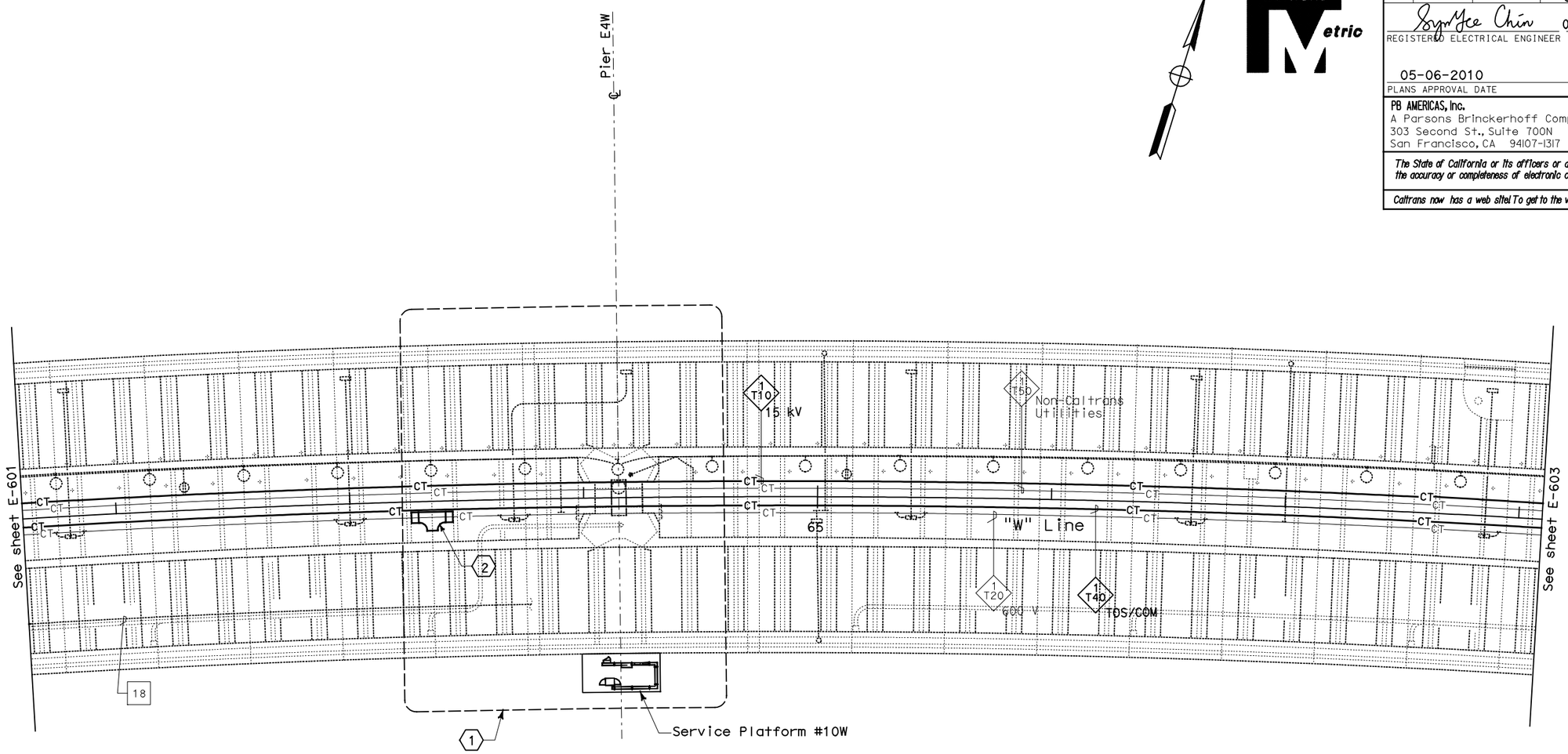

CONDUIT AND CABLE TRAY PLAN

NOTES:

1. This plan sheet is a record drawing from Skyway Structures contract.The Contractor shall verify the existing installation. See sheet EE-63 of Skyway Structures, contract No. 04-012024.
2. The Installed components shall not be limited to the ones listed below, but shall be a complete installation. For details, see Bridge Structures Girder Westbound, typical Details sheets.
   - Furnish and install 15 kV cables into existing cable tray shown on this drawing. Refer to riser diagram on sheets E-664 and E-665.
   - Furnish and install TOS fiber optic cables into existing cable tray shown on this drawing. Refer to riser diagram on sheets E-978 through E-981.
   - Inspect for system ground continuity. See sheets E-666 and E-667.
3. All cable trays shown on this drawing are existing. Bold ones are to be used for pulling cable.

SHEET NOTES:

1. For Service Platform #10W details, see sheet E-639.
2. Furnish and install splice cable tray as shown on sheet E-663, plan detail 2.

REQUEST FOR INFORMATION NOT ADDRESSED IN THIS CCO REMAIN IN FORCE

MARK	DATE	DESCRIPTIONS	BY	CH'D	CCO#
0	03/08/10	MEP INTEGRATION	SYC	FW	110

REVISIONS

CONTRACT CHANGE ORDER NO._____
SHEET _____ OF _____

BRIDGE STRUCTURES GIRDER WESTBOUND
SKYWAY STRUCTURES
SCALE: 1:200

E-602

THIS PLAN ACCURATE FOR ELECTRICAL WORK ONLY.

ALL DIMENSIONS ARE IN METERS UNLESS OTHERWISE SHOWN

FOR REDUCED PLANS ORIGINAL SCALE IS IN MILLIMETERS 0 20 40 60 80

DGN FILE =>04-0120f1_E-602.dgn
USERNAME =>llorico

CU 04251 EA 0120F1

DESIGN OVERSIGHT BEHZAD GOLEMOHAMMADI

CALCULATED/DESIGNED BY SYC DATE 01/10 REVISED BY
CHECKED BY FW 01/10 DATE REVISED

STATE OF CALIFORNIA - DEPARTMENT OF TRANSPORTATION
Caltrans

LAST REVISION 00-00-00
DATE PLOTTED => 25-MAY-2010
TIME PLOTTED => 11:16

DIST	COUNTY	ROUTE	KILOMETER POST TOTAL PROJECT	SHEET No	TOTAL SHEETS
04	SF, Ala	80	12.2/14.3 0.0/4.0	407a 06S04	1204

Syn Yee Chin 03/08/10
REGISTERED ELECTRICAL ENGINEER DATE

REGISTERED PROFESSIONAL ENGINEER
SYN YEE CHIN
No. 18186
Exp. 09/30/2011
ELECTRICAL
STATE OF CALIFORNIA

05-06-2010
PLANS APPROVAL DATE

PB AMERICAS, Inc.
A Parsons Brinckerhoff Company
303 Second St., Suite 700N
San Francisco, CA 94107-1317

The State of California or its officers or agents shall not be responsible for the accuracy or completeness of electronic copies of this plan sheet.

Caltrans now has a web site! To get to the web site, go to http://www.dot.ca.gov

Caltrans Metric

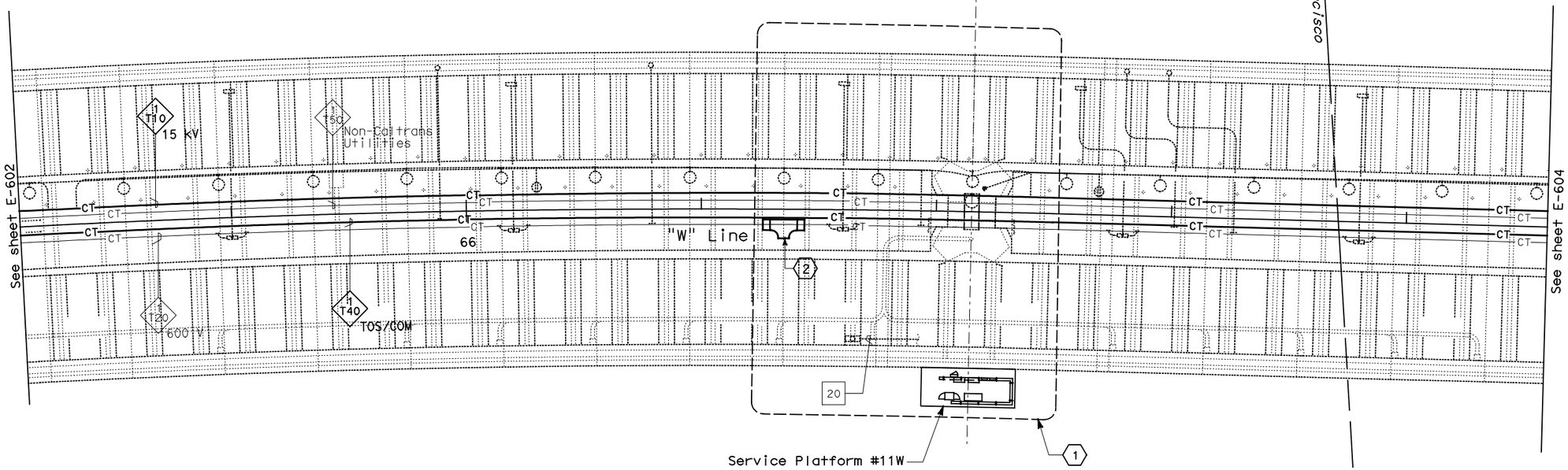

CONDUIT AND CABLE TRAY PLAN

NOTES:

1. This plan sheet is a record drawing from Skyway Structures contract. The Contractor shall verify the existing installation. See sheet EE-64 of Skyway Structures, contract No. 04-012024.
2. The installed components shall not be limited to the ones listed below, but shall be a complete installation. For details, see Bridge Structures Girder Westbound, typical Details sheets.
   - Furnish and install 15 kV cables into existing cable tray shown on this drawing. Refer to riser diagram on sheets E-664 and E-665.
   - Furnish and install TOS fiber optic cables into existing cable tray shown on this drawing. Refer to riser diagram on sheets E-978 through E-981.
   - Inspect for system ground continuity. See sheets E-666 and E-667.
3. All cable trays shown on this drawing are existing. Bold ones are to be used for pulling cable.

SHEET NOTES:

(1) For Service Platform #11W details, See sheet E-640.

(2) Furnish and install splice cable tray as shown on sheet E-663, plan detail 2.

REQUEST FOR INFORMATION NOT ADDRESSED IN THIS CCO REMAIN IN FORCE					
0	03/08/10	MEP INTEGRATION	SYC	FW	110
MARK	DATE	DESCRIPTIONS	BY	CH'D	CCO#
REVISIONS					

CONTRACT CHANGE ORDER NO._____
SHEET _____ OF _____

BRIDGE STRUCTURES GIRDER WESTBOUND
SKYWAY STRUCTURES
SCALE: 1:200

E-603

CALCULATED/ DESIGNED BY	SYC	DATE 01/10	REVISED BY
CHECKED BY	FW	01/10	DATE REVISED

DESIGN OVERSIGHT
BEHZAD GOLEMOHAMMADI

STATE OF CALIFORNIA - DEPARTMENT OF TRANSPORTATION
Caltrans

DATE PLOTTED => 25-MAY-2010
TIME PLOTTED => 11:16
LAST REVISION 00-00-00

THIS PLAN ACCURATE FOR ELECTRICAL WORK ONLY.

ALL DIMENSIONS ARE IN METERS UNLESS OTHERWISE SHOWN

FOR REDUCED PLANS ORIGINAL SCALE IS IN MILLIMETERS 0 20 40 60 80

DGN FILE =>04-0120f1_E-603.dgn
USERNAME =>llorico

CU 04251

EA 0120F1

DIST	COUNTY	ROUTE	KILOMETER POST TOTAL PROJECT	SHEET No	TOTAL SHEETS
04	SF, Ala	80	12.2/14.3 0.0/4.0	407a 06S05	1204

Syn Yee Chin 03/08/10
REGISTERED ELECTRICAL ENGINEER DATE

05-06-2010
PLANS APPROVAL DATE

REGISTERED PROFESSIONAL ENGINEER
SYN YEE CHIN
No. 18186
Exp. 09/30/2011
ELECTRICAL
STATE OF CALIFORNIA

PB AMERICAS, Inc.
A Parsons Brinckerhoff Company
303 Second St., Suite 700N
San Francisco, CA 94107-1317

The State of California or its officers or agents shall not be responsible for the accuracy or completeness of electronic copies of this plan sheet.

Caltrans now has a web site! To get to the web site, go to http://www.dot.ca.gov

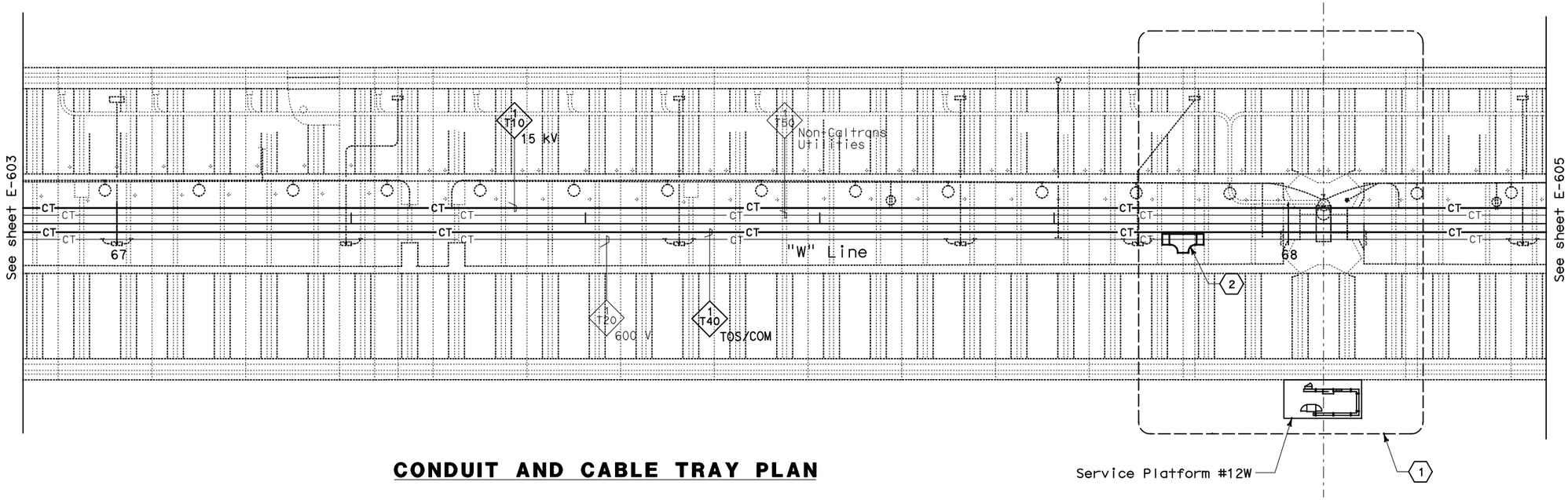

CONDUIT AND CABLE TRAY PLAN

NOTES:

1. This plan sheet is a record drawing from Skyway Structures contract. The Contractor shall verify the existing installation. See sheet EE-65 of Skyway Structures, contract No. 04-012024.
2. The installed components shall not be limited to the ones listed below, but shall be a complete installation. For details, see Bridge Structures Girder Westbound, typical Details sheets.
   - Furnish and install 15 kV cables into existing cable tray shown on this drawing. Refer to riser diagram on sheets E-664 and E-665.
   - Furnish and install TOS fiber optic cables into existing cable tray shown on this drawing. Refer to riser diagram on sheets E-978 through E-981.
   - Inspect for system ground continuity. See sheets E-666 and E-667.
3. All cable trays shown on this drawing are existing. Bold ones are to be used for pulling cable.

SHEET NOTES:

(1) For Service Platform #12W details, See sheet E-641.

(2) Furnish and install splice cable tray as shown on E-663, plan detail 2.

REQUEST FOR INFORMATION NOT ADDRESSED IN THIS CCO REMAIN IN FORCE

MARK	DATE	DESCRIPTIONS	BY	CH'D	CCO#
		REVISIONS			
0	03/08/10	MEP INTEGRATION	SYC	FW	110

CONTRACT CHANGE ORDER NO._____
SHEET _____ OF _____

BRIDGE STRUCTURES GIRDER WESTBOUND
SKYWAY STRUCTURES
SCALE: 1:200

E-604

THIS PLAN ACCURATE FOR ELECTRICAL WORK ONLY.

ALL DIMENSIONS ARE IN METERS UNLESS OTHERWISE SHOWN

FOR REDUCED PLANS ORIGINAL SCALE IS IN MILLIMETERS 0 20 40 60 80

DGN FILE =>04-0120f1_E-604.dgn
USERNAME =>llorico

CU 04251

EA 0120F1

LAST REVISION 00-00-00
DATE PLOTTED => 25-MAY-2010
TIME PLOTTED => 11:17

STATE OF CALIFORNIA - DEPARTMENT OF TRANSPORTATION
Caltrans

DESIGN OVERSIGHT
BEHZAD GOLEMOHAMMADI

	CALCULATED/ DESIGNED BY	SYC	DATE 01/10	REVISED BY
	CHECKED BY	FW	01/10	DATE REVISED

DIST	COUNTY	ROUTE	KILOMETER POST TOTAL PROJECT	SHEET No	TOTAL SHEETS
04	SF, Ala	80	12.2/14.3 0.0/4.0	407a 06S06	1204

Syn Yee Chin 03/08/10
REGISTERED ELECTRICAL ENGINEER DATE

05-06-2010
PLANS APPROVAL DATE

REGISTERED PROFESSIONAL ENGINEER
SYN YEE CHIN
No. 18186
Exp. 09/30/2011
ELECTRICAL
STATE OF CALIFORNIA

PB AMERICAS, Inc.
A Parsons Brinckerhoff Company
303 Second St., Suite 700N
San Francisco, CA 94107-1317

The State of California or its officers or agents shall not be responsible for the accuracy or completeness of electronic copies of this plan sheet.

Caltrans now has a web site! To get to the web site, go to http://www.dot.ca.gov

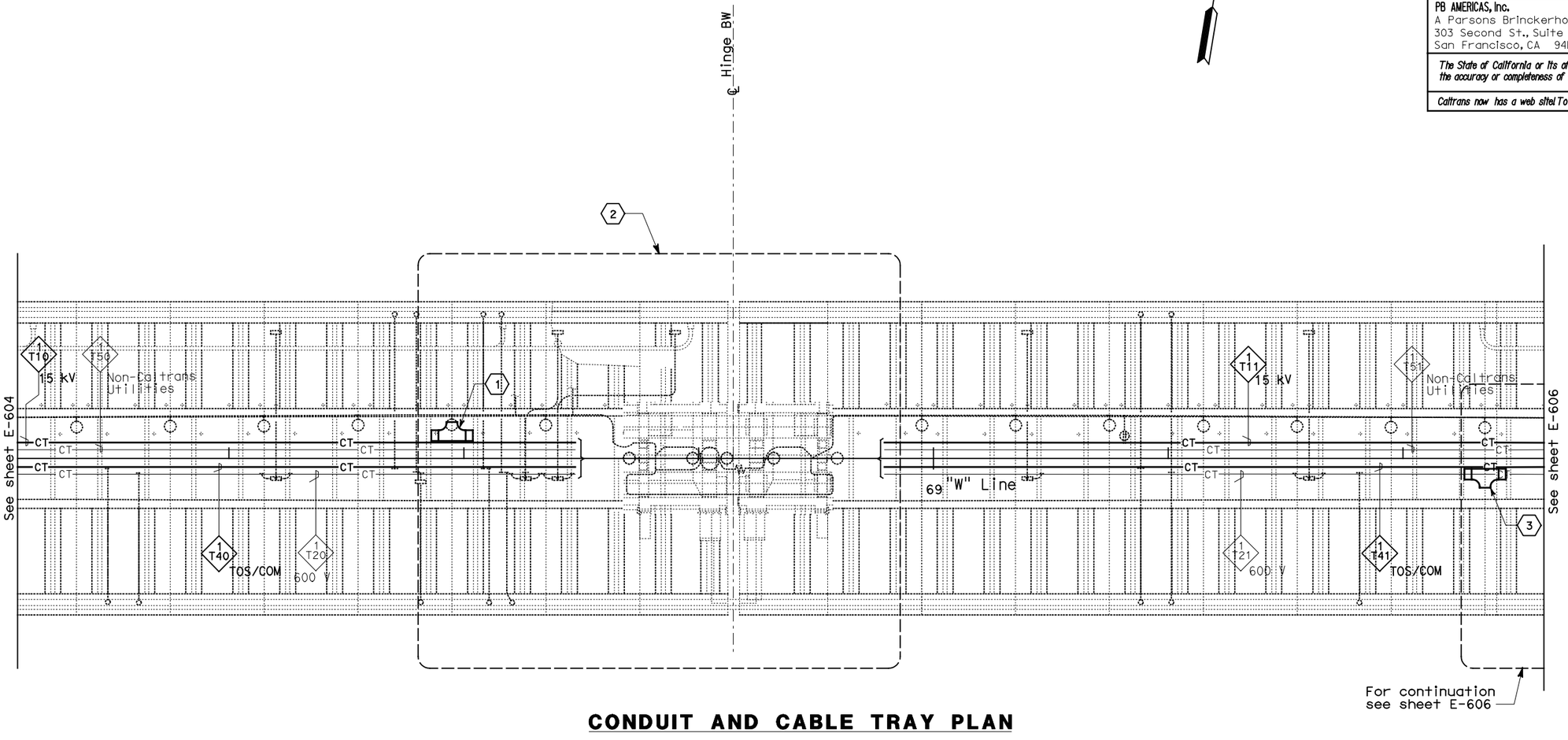

CONDUIT AND CABLE TRAY PLAN

NOTES:

1. This plan sheet is a record drawing from Skyway Structures contract. The Contractor shall verify the existing installation. See sheet EE-66 of Skyway Structures, contract No. 04-012024.
2. The installed components shall not be limited to the ones listed below, but shall be a complete installation. For details, see Bridge Structures Girder Westbound, typical Details sheets.
   - Furnish and install 15 kV cables into existing cable tray shown on this drawing. Refer to riser diagram on sheets E-664 and E-665.
   - Furnish and install TOS fiber optic cables into existing cable tray shown on this drawing. Refer to riser diagram on sheets E-978 through E-981.
   - Inspect for system ground continuity. See sheets E-666 and E-667.
3. All cable trays shown on this drawing are existing. Bold ones are to be used for pulling cable.

SHEET NOTES:

(1) Furnish and install splice cable tray as shown on sheet E-663, plan detail 1.

(2) For Hinge BW area details, see sheet E-642.

(3) Furnish and install splice cable tray as shown on sheet E-663, plan detail 2.

REQUEST FOR INFORMATION NOT ADDRESSED IN THIS CCO REMAIN IN FORCE					
MARK	DATE	REVISIONS DESCRIPTIONS	BY	CH'D	CCO#
0	03/08/10	MEP INTEGRATION	SYC	FW	110

CONTRACT CHANGE ORDER NO._____
SHEET _____ OF _____

BRIDGE STRUCTURES GIRDER WESTBOUND
SKYWAY STRUCTURES
SCALE: 1:200

E-605

THIS PLAN ACCURATE FOR ELECTRICAL WORK ONLY.

ALL DIMENSIONS ARE IN METERS UNLESS OTHERWISE SHOWN

FOR REDUCED PLANS ORIGINAL SCALE IS IN MILLIMETERS 0 20 40 60 80

DGN FILE =>04-0120f1_E-605.dgn
USERNAME =>llorico

CU 04251

EA 0120F1

DESIGN OVERSIGHT
BEHZAD GOLEMOHAMMADI

CALCULATED/DESIGNED BY
CHECKED BY

DATE	BY	REVISED
0/10	FW	DATE REVISED
03/08/10	SYC	

STATE OF CALIFORNIA - DEPARTMENT OF TRANSPORTATION
Caltrans

LAST REVISION 00-00-00
DATE PLOTTED => 25-MAY-2010
TIME PLOTTED => 11:17

DIST	COUNTY	ROUTE	KILOMETER POST TOTAL PROJECT	SHEET No	TOTAL SHEETS
04	SF, Ala	80	12.2/14.3 0.0/4.0	407a 06S07	1204

Caltrans Metric

Syn Yee Chin 03/08/10
REGISTERED ELECTRICAL ENGINEER DATE

REGISTERED PROFESSIONAL ENGINEER
SYN YEE CHIN
No. 18186
Exp. 09/30/2011
ELECTRICAL
STATE OF CALIFORNIA

05-06-2010
PLANS APPROVAL DATE

PB AMERICAS, Inc.
A Parsons Brinckerhoff Company
303 Second St., Suite 700N
San Francisco, CA 94107-1317

The State of California or its officers or agents shall not be responsible for the accuracy or completeness of electronic copies of this plan sheet.

Caltrans now has a web site! To get to the web site, go to http://www.dot.ca.gov

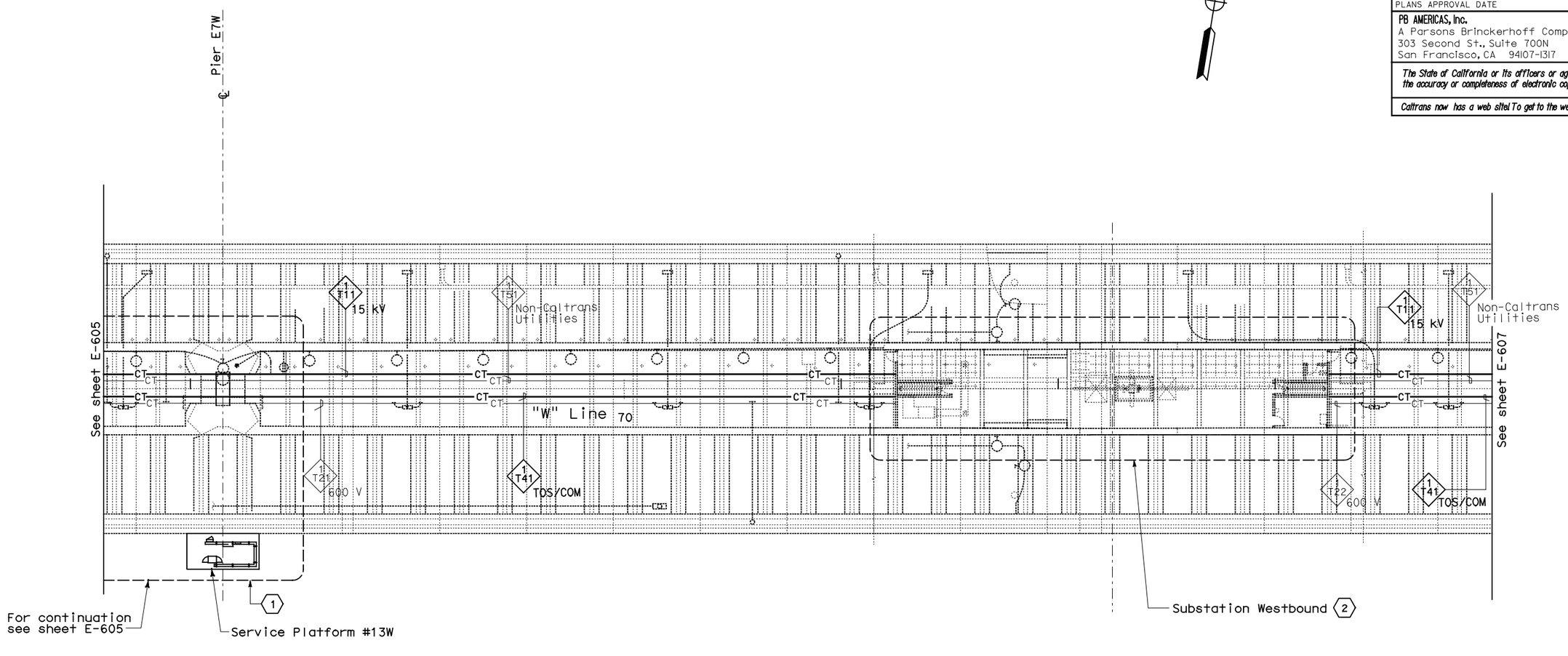

CONDUIT AND CABLE TRAY PLAN

NOTES:

1. This plan sheet is a record drawing from Skyway Structures contract. The Contractor shall verify the existing installation. See sheet EE-67 of Skyway Structures, contract No. 04-012024.
2. The installed components shall not be limited to the ones listed below, but shall be a complete installation. For details, see Bridge Structures Girder Westbound, typical Details sheets.
   - Furnish and install 15 kV cables into existing cable tray shown on this drawing. Refer to riser diagram on sheets E-664 to E-665.
   - Furnish and install TOS fiber optic cables into existing cable tray shown on this drawing. Refer to riser diagram on sheets E-978 through E-981.
   - Inspect for system ground continuity. See sheets E-666 and E-667.
3. All cable trays shown on this drawing are existing. Bold ones are to be used for pulling cable.

SHEET NOTES:

(1) For Service Platform #13W details, see sheet E-643.

(2) For Substation Westbound details, see sheet E-644.

REQUEST FOR INFORMATION NOT ADDRESSED IN THIS CCO REMAIN IN FORCE

MARK	DATE	DESCRIPTIONS	BY	CH'D	CCO#
		REVISIONS			
0	03/08/10	MEP INTEGRATION	SYC	FW	110

CONTRACT CHANGE ORDER NO. _____
SHEET _____ OF _____

BRIDGE STRUCTURES GIRDER WESTBOUND
SKYWAY STRUCTURES
SCALE: 1:200

E-606

THIS PLAN ACCURATE FOR ELECTRICAL WORK ONLY.

ALL DIMENSIONS ARE IN METERS UNLESS OTHERWISE SHOWN

FOR REDUCED PLANS ORIGINAL SCALE IS IN MILLIMETERS 0 20 40 60 80

DGN FILE =>04-0120f1_E-606.dgn
USERNAME =>llorico

CU 04251

EA 0120F1

DESIGN OVERSIGHT
BEHZAD GOLEMOHAMMADI

CALCULATED/DESIGNED BY
CHECKED BY

DATE	REVISED BY
01/10	DATE REVISED
SYC	
FW	

STATE OF CALIFORNIA - DEPARTMENT OF TRANSPORTATION
Caltrans

LAST REVISION 00-00-00
DATE PLOTTED => 25-MAY-2010
TIME PLOTTED => 11:17

DIST	COUNTY	ROUTE	KILOMETER POST TOTAL PROJECT	SHEET No	TOTAL SHEETS
04	SF,Ala	80	12.2/14.3 0.0/4.0	407a 06S08	1204

Syn Yee Chin 03/08/10
REGISTERED ELECTRICAL ENGINEER DATE

05-06-2010
PLANS APPROVAL DATE

REGISTERED PROFESSIONAL ENGINEER SYN YEE CHIN No. 18186 Exp. 09/30/2011 ELECTRICAL STATE OF CALIFORNIA

PB AMERICAS, Inc.
A Parsons Brinckerhoff Company
303 Second St., Suite 700N
San Francisco, CA 94107-1317

The State of California or its officers or agents shall not be responsible for the accuracy or completeness of electronic copies of this plan sheet.

Caltrans now has a web site! To get to the web site, go to http://www.dot.ca.gov

Caltrans Metric

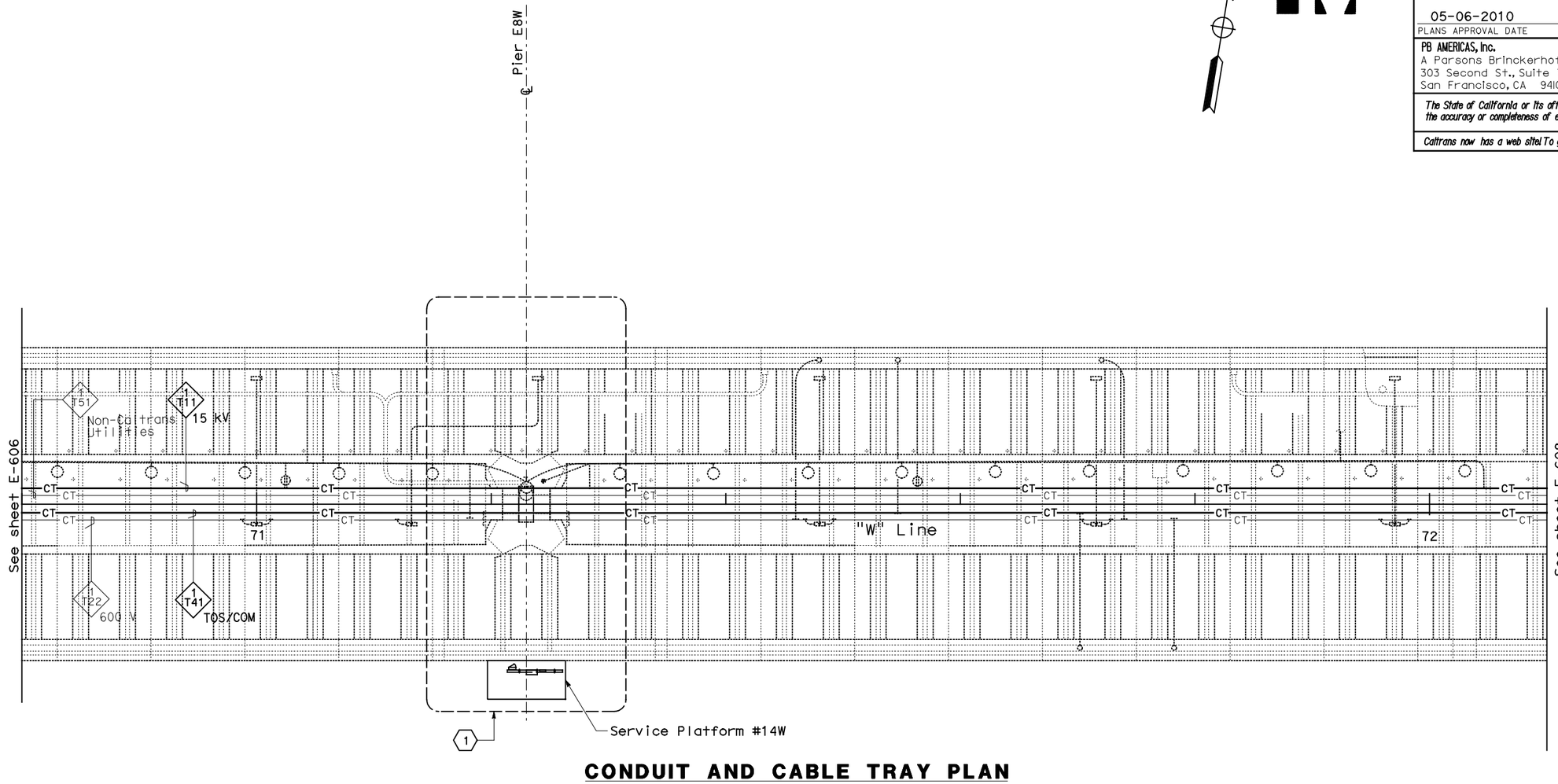

CONDUIT AND CABLE TRAY PLAN

NOTES:

1. This plan sheet is a record drawing from Skyway Structures contract. The Contractor shall verify the existing installation. See sheet EE-68 of Skyway Structures, contract No. 04-012024.
2. The installed components shall not be limited to the ones listed below, but shall be a complete installation. For details, see Bridge Structures Girder Westbound, typical Details sheets.
   - Furnish and install 15 kV cables into existing cable tray shown on this drawing. Refer to riser diagram on E-664 and E-665.
   - Furnish and install TOS fiber optic cables into existing cable tray shown on this drawing. Refer to riser diagram on sheets E-978 through E-981.
   - Inspect for system ground continuity. See sheets E-666 and E-667.
3. All cable trays shown on this drawing are existing. Bold ones are to be used for pulling cable.

SHEET NOTES:

1. For Service Platform #14W details, see sheet E-645.

REQUEST FOR INFORMATION NOT ADDRESSED IN THIS CCO REMAIN IN FORCE

MARK	DATE	DESCRIPTIONS	BY	CH'D	CCO#
0	03/08/10	MEP INTEGRATION	SYC	FW	110

REVISIONS

CONTRACT CHANGE ORDER NO._____
SHEET _____ OF _____

BRIDGE STRUCTURES GIRDER WESTBOUND
SKYWAY STRUCTURES
SCALE: 1:200

E-607

STATE OF CALIFORNIA - DEPARTMENT OF TRANSPORTATION
Caltrans

DESIGN OVERSIGHT: BEHZAD GOLEMOHAMMADI
CALCULATED/DESIGNED BY: SYC DATE 01/10
CHECKED BY: FW 01/10
REVISED BY
DATE REVISED

THIS PLAN ACCURATE FOR ELECTRICAL WORK ONLY.

ALL DIMENSIONS ARE IN METERS UNLESS OTHERWISE SHOWN

FOR REDUCED PLANS ORIGINAL SCALE IS IN MILLIMETERS 0 20 40 60 80

DGN FILE =>04-0120f1_E-607.dgn
USERNAME =>llorico

CU 04251 EA 0120F1

LAST REVISION 00-00-00
DATE PLOTTED => 25-MAY-2010
TIME PLOTTED => 11:17

DIST	COUNTY	ROUTE	KILOMETER POST TOTAL PROJECT	SHEET No	TOTAL SHEETS
04	SF, Ala	80	12.2/14.3 0.0/4.0	407a 06S09	1204

Syn Yee Chin 03/08/10
REGISTERED ELECTRICAL ENGINEER DATE

REGISTERED PROFESSIONAL ENGINEER
SYN YEE CHIN
No. 18186
Exp. 09/30/2011
ELECTRICAL
STATE OF CALIFORNIA

05-06-2010
PLANS APPROVAL DATE

PB AMERICAS, Inc.
A Parsons Brinckerhoff Company
303 Second St., Suite 700N
San Francisco, CA 94107-1317

The State of California or its officers or agents shall not be responsible for the accuracy or completeness of electronic copies of this plan sheet.

Caltrans now has a web site! To get to the web site, go to http://www.dot.ca.gov

Caltrans Metric

DESIGN OVERSIGHT	CALCULATED/ DESIGNED BY	DATE	REVISED BY
BEHZAD GOLEMOHAMMADI	CHECKED BY	SYC	DATE REVISED
		FW	01/10

STATE OF CALIFORNIA - DEPARTMENT OF TRANSPORTATION
Caltrans

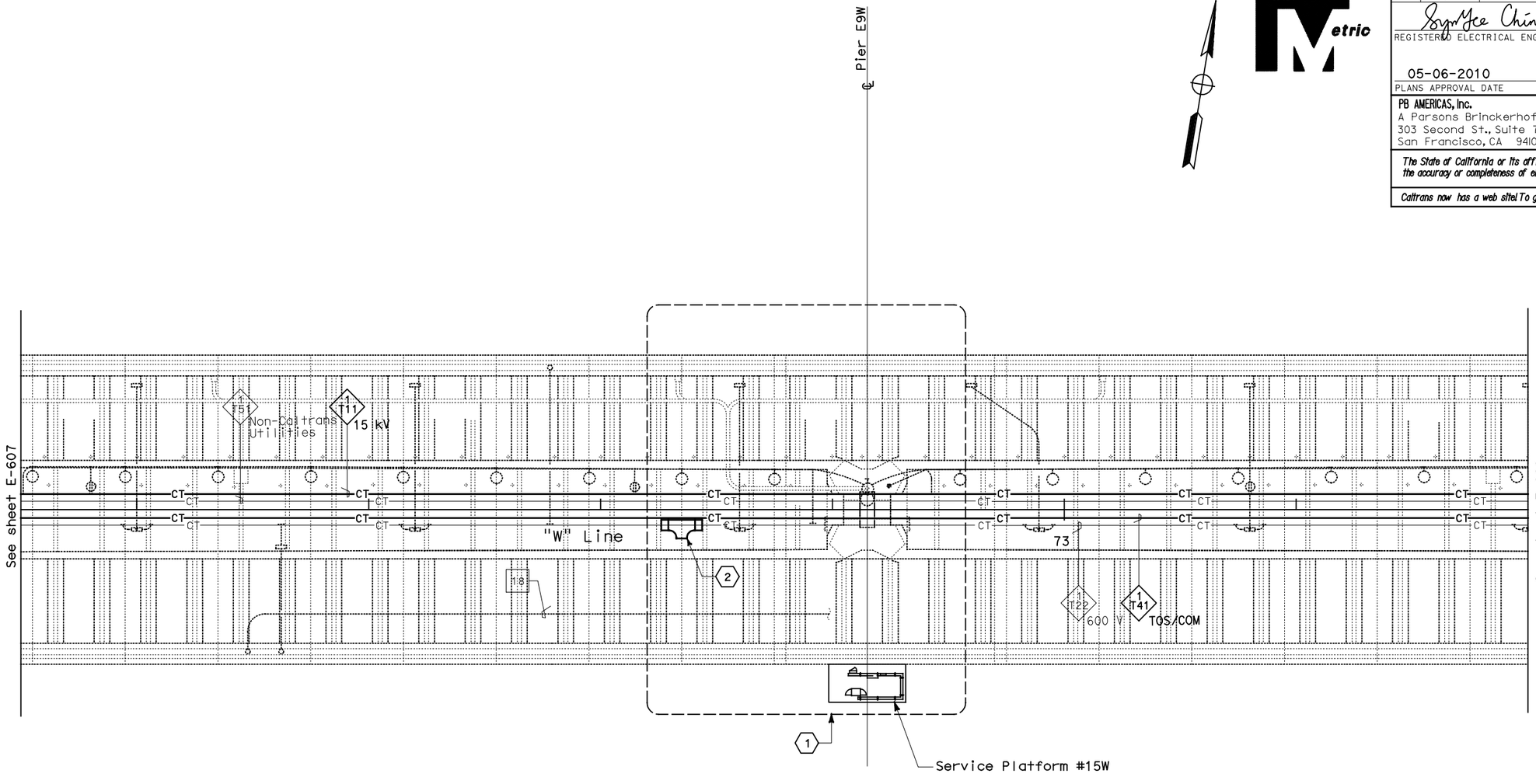

CONDUIT AND CABLE TRAY PLAN

NOTES:

1. This plan sheet is a record drawing from Skyway Structures contract. The Contractor shall verify the existing installation. See sheet EE-69 of Skyway Structures, contract No. 04-012024.
2. The installed components shall not be limited to the ones listed below, but shall be a complete installation. For details, see Bridge Structures Girder Westbound, typical Details sheets.
   - Furnish and install 15 kV cables into existing cable tray shown on this drawing. Refer to riser diagram on sheets E-664 and E-665.
   - Furnish and install TOS fiber optic cables into existing cable tray shown on this drawing. Refer to riser diagram on sheets E-978 through E-981.
   - Inspect for system ground continuity. See sheets E-666 and E-667.
3. All cable trays shown on this drawing are existing. Bold ones are to be used for pulling cable.

SHEET NOTES:

(1) For Service Platform #15W details, see sheet E-646.

(2) Furnish and install splice cable tray as shown on sheet E-663, plan detail 2.

REQUEST FOR INFORMATION NOT ADDRESSED IN THIS CCO REMAIN IN FORCE

MARK	DATE	DESCRIPTIONS	BY	CH'D	CCO#
		REVISIONS			
0	03/08/10	MEP INTEGRATION	SYC	FW	110

CONTRACT CHANGE ORDER NO._____
SHEET _____ OF _____

BRIDGE STRUCTURES GIRDER WESTBOUND
SKYWAY STRUCTURES
SCALE: 1:200

E-608

LAST REVISION 00-00-00
DATE PLOTTED => 25-MAY-2010
TIME PLOTTED => 11:17

THIS PLAN ACCURATE FOR ELECTRICAL WORK ONLY.

ALL DIMENSIONS ARE IN METERS UNLESS OTHERWISE SHOWN

FOR REDUCED PLANS ORIGINAL SCALE IS IN MILLIMETERS 0 20 40 60 80

DGN FILE =>04-0120f1_E-608.dgn
USERNAME =>llorico

CU 04251

EA 0120F1

DIST	COUNTY	ROUTE	KILOMETER POST TOTAL PROJECT	SHEET No	TOTAL SHEETS
04	SF, Ala	80	12.2/14.3 0.0/4.0	407a 06S10	1204

Syn Yee Chin 03/08/10
REGISTERED ELECTRICAL ENGINEER DATE

05-06-2010
PLANS APPROVAL DATE

REGISTERED PROFESSIONAL ENGINEER
SYN YEE CHIN
No. 18186
Exp. 09/30/2011
ELECTRICAL
STATE OF CALIFORNIA

PB AMERICAS, Inc.
A Parsons Brinckerhoff Company
303 Second St., Suite 700N
San Francisco, CA 94107-1317

The State of California or its officers or agents shall not be responsible for the accuracy or completeness of electronic copies of this plan sheet.

Caltrans now has a web site! To get to the web site, go to http://www.dot.ca.gov

Caltrans Metric

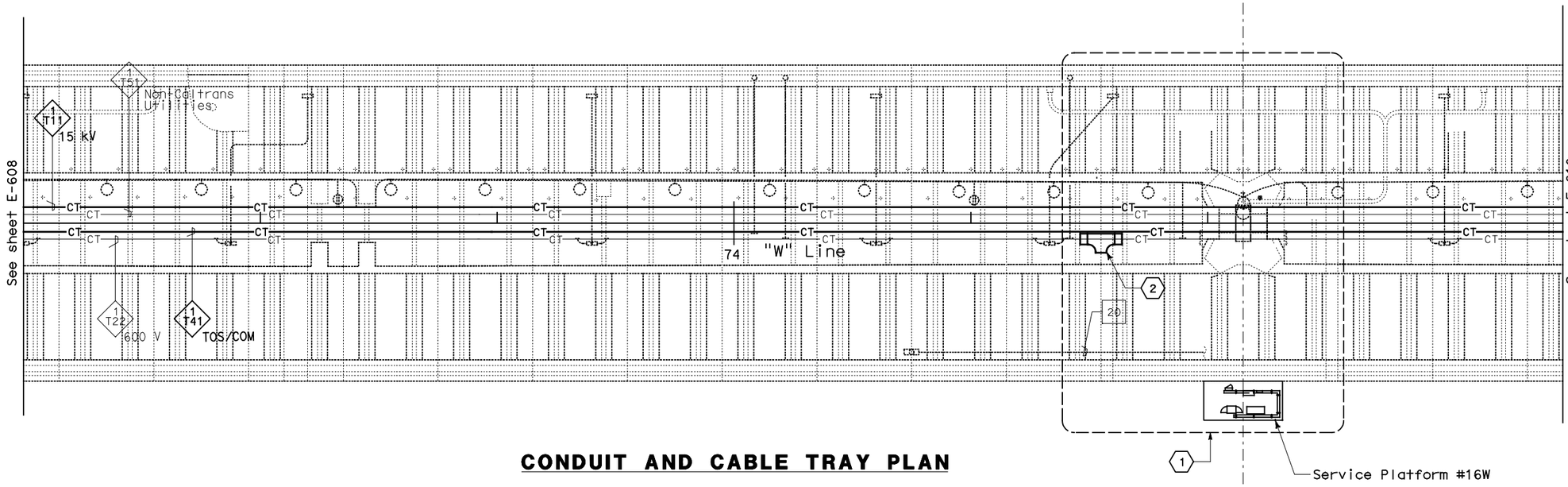

CONDUIT AND CABLE TRAY PLAN

NOTES:

1. This plan sheet is a record drawing from Skyway Structures contract. The Contractor shall verify the existing installation. See sheet EE-70 of Skyway Structures, contract No. 04-012024.
2. The installed components shall not be limited to the ones listed below, but shall be a complete installation. For details, see Bridge Structures Girder Westbound, typical Details sheets.
   - Furnish and install 15 kV cables into existing cable tray shown on this drawing. Refer to riser diagram on sheets E-664 and E-665.
   - Furnish and install TOS fiber optic cables into existing cable tray shown on this drawing. Refer to riser diagram on sheets E-978 through E-981.
   - Inspect for system ground continuity. See sheets E-666 and E-667.
3. All cable trays shown on this drawing are existing. Bold ones are to be used for pulling cable.

SHEET NOTES:

(1) For Service Platform #16W details, see sheet E-647.

(2) Furnish and install splice cable tray as shown on sheet E-663, plan detail 2.

REQUEST FOR INFORMATION NOT ADDRESSED IN THIS CCO REMAIN IN FORCE

MARK	DATE	DESCRIPTIONS	BY	CH'D	CCO#
		REVISIONS			
0	03/08/10	MEP INTEGRATION	SYC	FW	110

CONTRACT CHANGE ORDER NO._____
SHEET _____ OF _____

BRIDGE STRUCTURES GIRDER WESTBOUND
SKYWAY STRUCTURES
SCALE: 1:200

E-609

DESIGN OVERSIGHT: BEHZAD GOLEMOHAMMADI
CALCULATED/DESIGNED BY:
CHECKED BY:

SYC	DATE 01/10	REVISED BY
FW	01/10	DATE REVISED

STATE OF CALIFORNIA - DEPARTMENT OF TRANSPORTATION
Caltrans

THIS PLAN ACCURATE FOR ELECTRICAL WORK ONLY.

ALL DIMENSIONS ARE IN METERS UNLESS OTHERWISE SHOWN ALL DIMENSIONS ARE IN MILLIMETERS UNLESS OTHERWISE SHOWN

FOR REDUCED PLANS ORIGINAL SCALE IS IN MILLIMETERS 0 20 40 60 80

DGN FILE =>04-0120f1_E-609.dgn
USERNAME =>llorico

CU 04251

EA 0120F1

LAST REVISION 00-00-00
DATE PLOTTED => 06-MAY-2010
TIME PLOTTED => 18:03

DIST	COUNTY	ROUTE	KILOMETER POST TOTAL PROJECT	SHEET No	TOTAL SHEETS
04	SF, Ala	80	12.2/14.3 0.0/4.0	407a 06S11	1204

Syn Yee Chin 03/08/10
REGISTERED ELECTRICAL ENGINEER DATE

REGISTERED PROFESSIONAL ENGINEER
SYN YEE CHIN
No. 18186
Exp. 09/30/2011
ELECTRICAL
STATE OF CALIFORNIA

05-06-2010
PLANS APPROVAL DATE

PB AMERICAS, Inc.
A Parsons Brinckerhoff Company
303 Second St., Suite 700N
San Francisco, CA 94107-1317

The State of California or its officers or agents shall not be responsible for the accuracy or completeness of electronic copies of this plan sheet.

Caltrans now has a web site! To get to the web site, go to http://www.dot.ca.gov

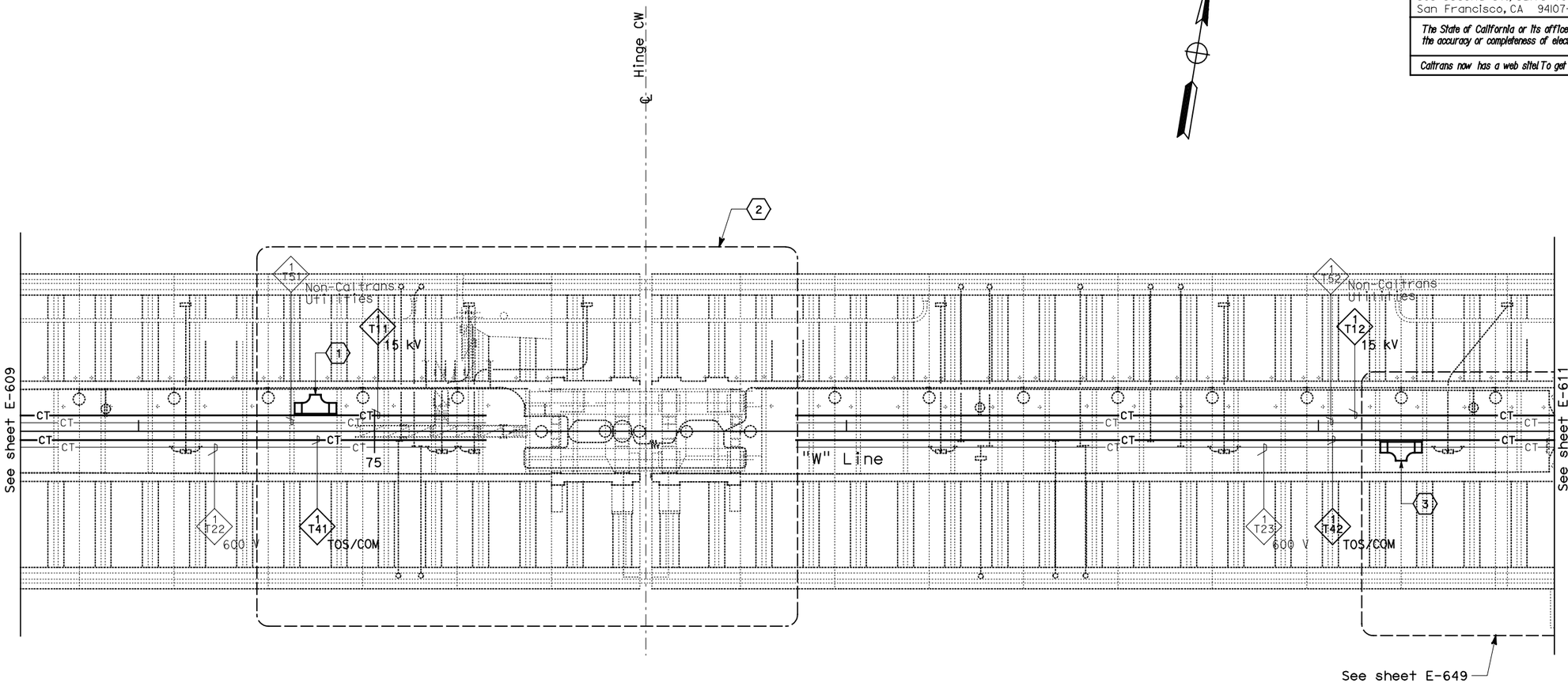

CONDUIT AND CABLE TRAY PLAN

NOTES:

1. This plan sheet is a record drawing from Skyway Structures contract. The Contractor shall verify the existing installation. See sheet EE-71 from Skyway Structures, contract No. 04-012024.
2. The installed components shall not be limited to the ones listed below, but shall be a complete installation. For details, see Bridge Structures Girder Westbound, typical Details sheets.
   - Furnish and install 15kV cables into existing cable tray shown on this drawing. Refer to riser diagram on sheets E-664 and E-665.
   - Furnish and install TOS fiber optic cables into existing cable tray shown on this drawing. Refer to riser diagram on sheets E-978 through E-981.
   - Inspect for system ground continuity. See sheets E-666 and E-667.
3. All cable trays shown on this drawing are existing. Bold ones are to be used for pulling cable.

SHEET NOTES:

(1) Furnish and install splice cable tray as shown on sheet E-663, plan detail 1.

(2) For Hinge CW area details, see sheet E-648.

(3) Furnish and install splice cable tray as shown on sheet E-663, plan detail 2.

REQUEST FOR INFORMATION NOT ADDRESSED IN THIS CCO REMAIN IN FORCE

MARK	DATE	DESCRIPTIONS	BY	CH'D	CCO#
		REVISIONS			
0	03/08/10	MEP INTEGRATION	SYC	FW	110

CONTRACT CHANGE ORDER NO._____
SHEET _____ OF _____

BRIDGE STRUCTURES GIRDER WESTBOUND
SKYWAY STRUCTURES
SCALE: 1:200

E-610

DESIGN OVERSIGHT BEHZAD GOLEMOHAMMADI
CALCULATED/DESIGNED BY
CHECKED BY
SYC FW
DATE 01/10 01/10
REVISED BY
DATE REVISED
STATE OF CALIFORNIA - DEPARTMENT OF TRANSPORTATION
Caltrans

LAST REVISION 00-00-00
DATE PLOTTED => 06-MAY-2010
TIME PLOTTED => 18:03

THIS PLAN ACCURATE FOR ELECTRICAL WORK ONLY.

ALL DIMENSIONS ARE IN METERS UNLESS OTHERWISE SHOWN

FOR REDUCED PLANS ORIGINAL SCALE IS IN MILLIMETERS 0 20 40 60 80

DGN FILE =>04-0120f1_E-610.dgn
USERNAME =>llorico

CU 04251

EA 0120F1

DIST	COUNTY	ROUTE	KILOMETER POST TOTAL PROJECT	SHEET No	TOTAL SHEETS
04	SF,Ala	80	12.2/14.3 0.0/4.0	407a 06S12	1204

Syn Yee Chin 03/08/10
REGISTERED ELECTRICAL ENGINEER DATE

05-06-2010
PLANS APPROVAL DATE

REGISTERED PROFESSIONAL ENGINEER SYN YEE CHIN No. 18186 Exp. 09/30/2011 ELECTRICAL STATE OF CALIFORNIA

PB AMERICAS, Inc.
A Parsons Brinckerhoff Company
303 Second St., Suite 700N
San Francisco, CA 94107-1317

The State of California or its officers or agents shall not be responsible for the accuracy or completeness of electronic copies of this plan sheet.

Caltrans now has a web site! To get to the web site, go to http://www.dot.ca.gov

Caltrans Metric

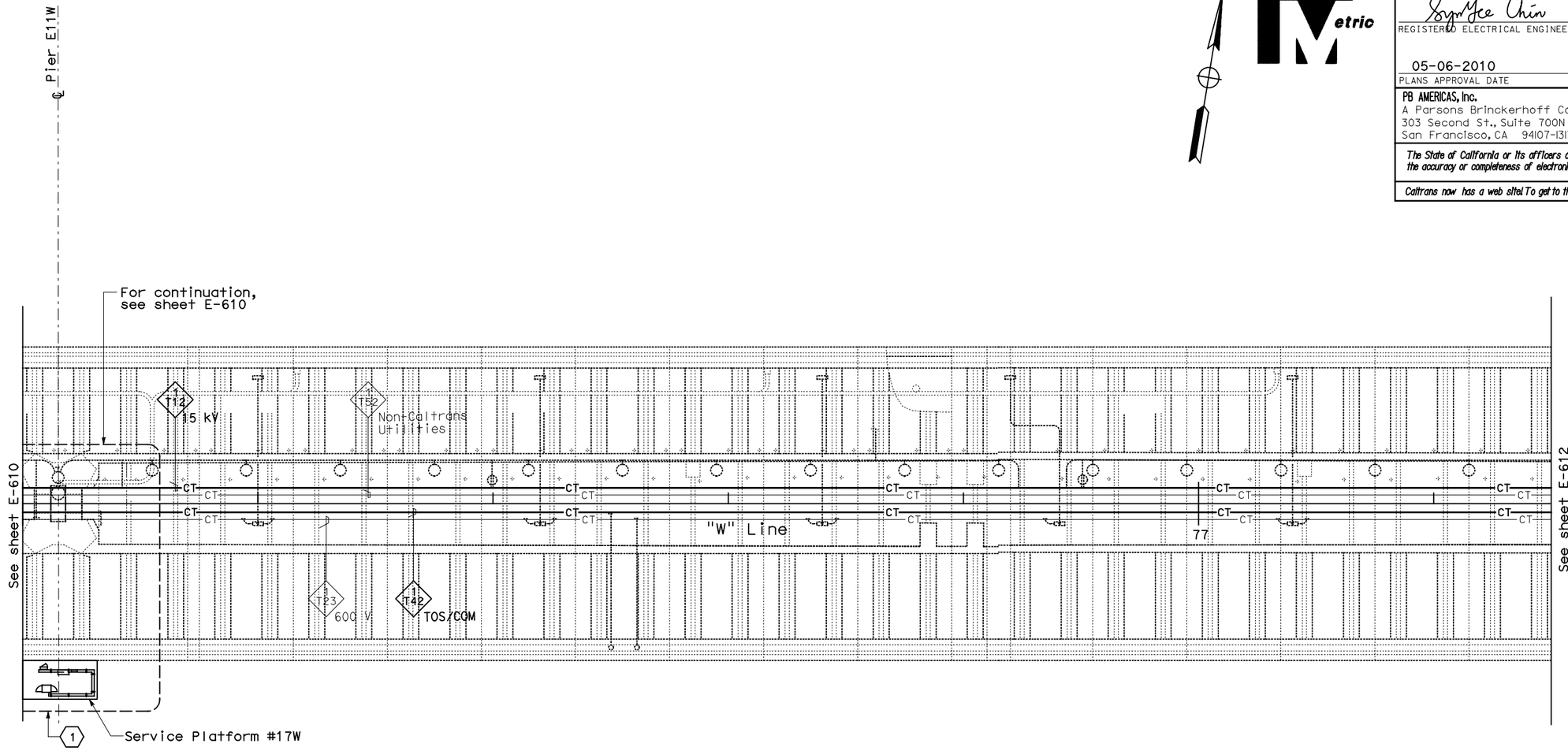

CONDUIT AND CABLE TRAY PLAN

NOTES:

1. This plan sheet is a record drawing from Skyway Structures contract. The Contractor shall verify the existing installation. See sheet EE-72 from Skyway Structures, contract No. 04-012024.
2. The installed components shall not be limited to the ones listed below, but shall be a complete installation. For details, see Bridge Structures Girder Westbound, typical Details sheets.
   - Furnish and install 15kV cables into existing cable tray shown on this drawing. Refer to riser diagram on sheets E-664 and E-665.
   - Furnish and install TOS fiber optic cables into existing cable tray shown on this drawing. Refer to riser diagram on sheets E-978 through E-981.
   - Inspect for system ground continuity. See sheets E-666 and E-667.
3. All cable trays shown on this drawing are existing. Bold ones are to be used for pulling cable.

SHEET NOTES:

1. For Service Platform #17W details, see sheet E-649.

REQUEST FOR INFORMATION NOT ADDRESSED IN THIS CCO REMAIN IN FORCE

MARK	DATE	DESCRIPTIONS	BY	CH'D	CCO#
0	03/08/10	MEP INTEGRATION	SYC	FW	110

REVISIONS

CONTRACT CHANGE ORDER NO._____
SHEET_____ OF _____

BRIDGE STRUCTURES GIRDER WESTBOUND
SKYWAY STRUCTURES
SCALE: 1:200

E-611

THIS PLAN ACCURATE FOR ELECTRICAL WORK ONLY.

ALL DIMENSIONS ARE IN METERS UNLESS OTHERWISE SHOWN

FOR REDUCED PLANS ORIGINAL SCALE IS IN MILLIMETERS 0 20 40 60 80

DGN FILE =>04-0120f1_E-611.dgn
USERNAME =>llorico

CU 04251 EA 0120F1

DATE PLOTTED => 06-MAY-2010
TIME PLOTTED => 18:03
LAST REVISION 00-00-00

STATE OF CALIFORNIA - DEPARTMENT OF TRANSPORTATION
Caltrans

DESIGN OVERSIGHT BEHZAD GOLEMOHAMMADI

CALCULATED/DESIGNED BY SYC DATE 01/10 REVISED BY
CHECKED BY FW 01/10 DATE REVISED

DIST	COUNTY	ROUTE	KILOMETER POST TOTAL PROJECT	SHEET No	TOTAL SHEETS
04	SF, Ala	80	12.2/14.3 0.0/4.0	407a 06S13	1204

Syn Yee Chin 03/08/10
REGISTERED ELECTRICAL ENGINEER DATE

05-06-2010
PLANS APPROVAL DATE

REGISTERED PROFESSIONAL ENGINEER
SYN YEE CHIN
No. 18186
Exp. 09/30/2011
ELECTRICAL
STATE OF CALIFORNIA

PB AMERICAS, Inc.
A Parsons Brinckerhoff Company
303 Second St., Suite 700N
San Francisco, CA 94107-1317

The State of California or its officers or agents shall not be responsible for the accuracy or completeness of electronic copies of this plan sheet.

Caltrans now has a web site! To get to the web site, go to http://www.dot.ca.gov

Caltrans Metric

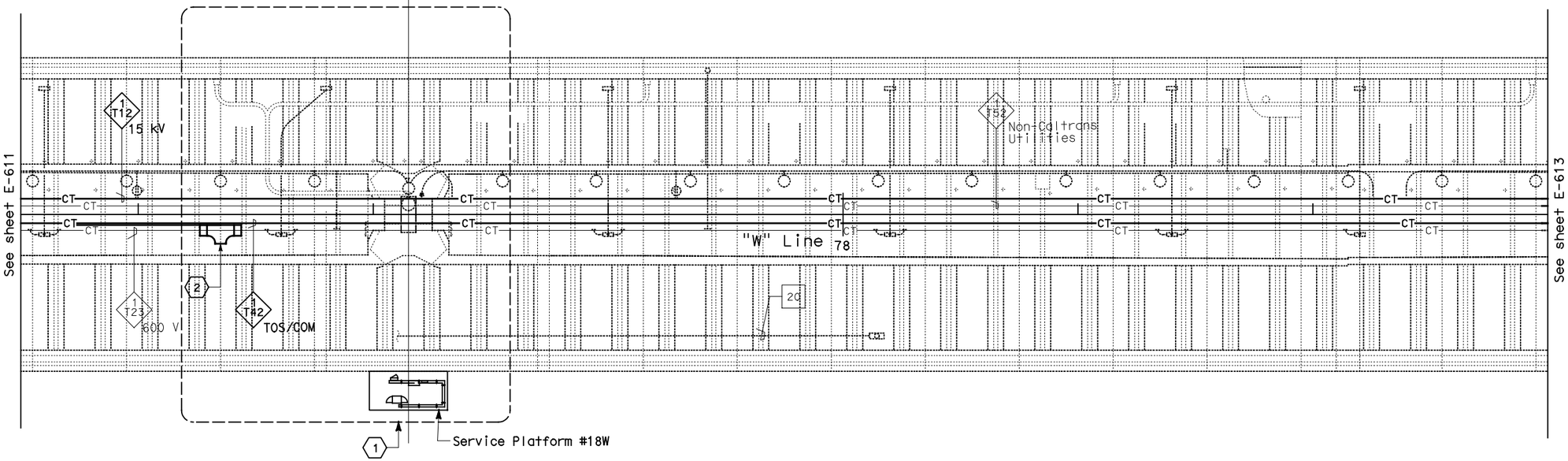

CONDUIT AND CABLE TRAY PLAN

NOTES:

1. This plan sheet is a record drawing from Skyway Structures contract. The Contractor shall verify the existing installation. See sheet EE-73 from Skyway Structures, contract No. 04-012024.
2. The installed components shall not be limited to the ones listed below, but shall be a complete installation. For details, see Bridge Structures Girder Westbound, typical Details sheets.
   - Furnish and install 15kV cables into existing cable tray shown on this drawing. Refer to riser diagram on sheets E-664 and E-665.
   - Furnish and install TOS fiber optic cables into existing cable tray shown on this drawing. Refer to riser diagram on sheets E-978 through E-981.
   - Inspect for system ground continuity. See sheets E-666 and E-667.
3. All cable trays shown on this drawing are existing. Bolds ones are to be used for pulling cable.

SHEET NOTES:

(1) For Service Platform #18W details, see sheet E-650.

(2) Furnish and install splice cable tray as shown on sheet E-663, plan detail 2.

REQUEST FOR INFORMATION NOT ADDRESSED IN THIS CCO REMAIN IN FORCE

MARK	DATE	DESCRIPTIONS	BY	CH'D	CCO#
		REVISIONS			
0	03/08/10	MEP INTEGRATION	SYC	FW	110

CONTRACT CHANGE ORDER NO._____
SHEET _____ OF _____

BRIDGE STRUCTURES GIRDER WESTBOUND
SKYWAY STRUCTURES
SCALE: 1:200

E-612

THIS PLAN ACCURATE FOR ELECTRICAL WORK ONLY.

ALL DIMENSIONS ARE IN METERS UNLESS OTHERWISE SHOWN

FOR REDUCED PLANS ORIGINAL SCALE IS IN MILLIMETERS 0 20 40 60 80

DGN FILE =>04-0120f1_E-612.dgn
USERNAME =>llorico

CU 04251

EA 0120F1

CALCULATED/ DESIGNED BY	SYC	DATE 01/10	REVISED BY
CHECKED BY	FW	01/10	DATE REVISED

DESIGN OVERSIGHT
BEHZAD GOLEMOHAMMADI

STATE OF CALIFORNIA - DEPARTMENT OF TRANSPORTATION
Caltrans

LAST REVISION 00-00-00
DATE PLOTTED => 06-MAY-2010
TIME PLOTTED => 18:03

DIST	COUNTY	ROUTE	KILOMETER POST TOTAL PROJECT	SHEET No	TOTAL SHEETS
04	SF, Ala	80	12.2/14.3 0.0/4.0	407a 06S14	1204

Syn Yee Chin 03/08/10
REGISTERED ELECTRICAL ENGINEER DATE

REGISTERED PROFESSIONAL ENGINEER
SYN YEE CHIN
No. 18186
Exp. 09/30/2011
ELECTRICAL
STATE OF CALIFORNIA

05-06-2010
PLANS APPROVAL DATE

PB AMERICAS, Inc.
A Parsons Brinckerhoff Company
303 Second St., Suite 700N
San Francisco, CA 94107-1317

The State of California or its officers or agents shall not be responsible for the accuracy or completeness of electronic copies of this plan sheet.

Caltrans now has a web site! To get to the web site, go to http://www.dot.ca.gov

DESIGN OVERSIGHT	CALCULATED/ DESIGNED BY	SYC	DATE 01/10	REVISED BY
BEHZAD GOLEMOHAMMADI	CHECKED BY	FW	01/10	DATE REVISED

STATE OF CALIFORNIA - DEPARTMENT OF TRANSPORTATION
Caltrans

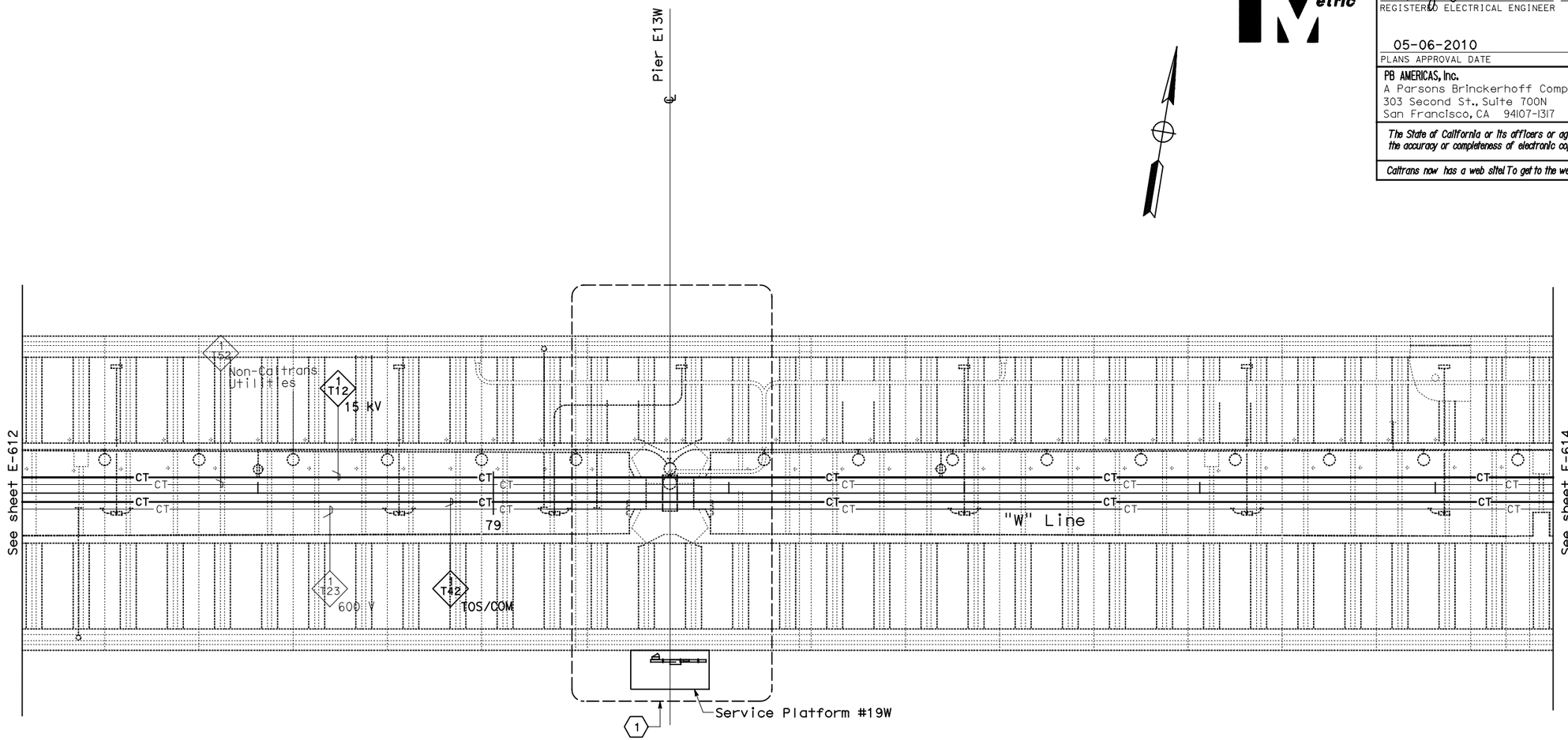

CONDUIT AND CABLE TRAY PLAN

NOTES:

1. This plan sheet is a record drawing from Skyway Structures contract. The Contractor shall verify the existing installation. See sheet EE-74 from Skyway Structures, contract No. 04-012024.
2. The installed components shall not be limited to the ones listed below, but shall be a complete installation. For details, see Bridge Structures Girder Westbound, typical Details sheets.
   - Furnish and install 15kV cables into existing cable tray shown on this drawing. Refer to riser diagram on sheets E-664 and E-665.
   - Furnish and install TOS fiber optic cables into existing cable tray shown on this drawing. Refer to riser diagram on sheets E-978 through E-981.
   - Inspect for system ground continuity. See sheets E-666 and E-667.
3. All cable trays shown on this drawing are existing. Bold ones are to be used for pulling cable.

SHEET NOTES:

(1) For Service Platform #19W details, see sheet E-651.

REQUEST FOR INFORMATION NOT ADDRESSED IN THIS CCO REMAIN IN FORCE

MARK	DATE	DESCRIPTIONS	BY	CH'D	CCO#
		REVISIONS			
0	03/08/10	MEP INTEGRATION	SYC	FW	110

CONTRACT CHANGE ORDER NO._____
SHEET _____ OF _____

BRIDGE STRUCTURES GIRDER WESTBOUND
SKYWAY STRUCTURES
SCALE: 1:200

E-613

LAST REVISION 00-00-00
DATE PLOTTED => 06-MAY-2010
TIME PLOTTED => 18:03

THIS PLAN ACCURATE FOR ELECTRICAL WORK ONLY.

ALL DIMENSIONS ARE IN METERS UNLESS OTHERWISE SHOWN

FOR REDUCED PLANS ORIGINAL SCALE IS IN MILLIMETERS 0 20 40 60 80

DGN FILE =>04-0120f1_E-613.dgn
USERNAME =>llorico

CU 04251

EA 0120F1

DIST	COUNTY	ROUTE	KILOMETER POST TOTAL PROJECT	SHEET No	TOTAL SHEETS
04	SF,Ala	80	12.2/14.3 0.0/4.0	407a 06S15	1204

Caltrans Metric

Syn Yee Chin 03/08/10
REGISTERED ELECTRICAL ENGINEER DATE

05-06-2010
PLANS APPROVAL DATE

REGISTERED PROFESSIONAL ENGINEER SYN YEE CHIN No. 18186 Exp. 09/30/2011 ELECTRICAL STATE OF CALIFORNIA

PB AMERICAS, Inc.
A Parsons Brinckerhoff Company
303 Second St., Suite 700N
San Francisco, CA 94107-1317

The State of California or its officers or agents shall not be responsible for the accuracy or completeness of electronic copies of this plan sheet.

Caltrans now has a web site! To get to the web site, go to http://www.dot.ca.gov

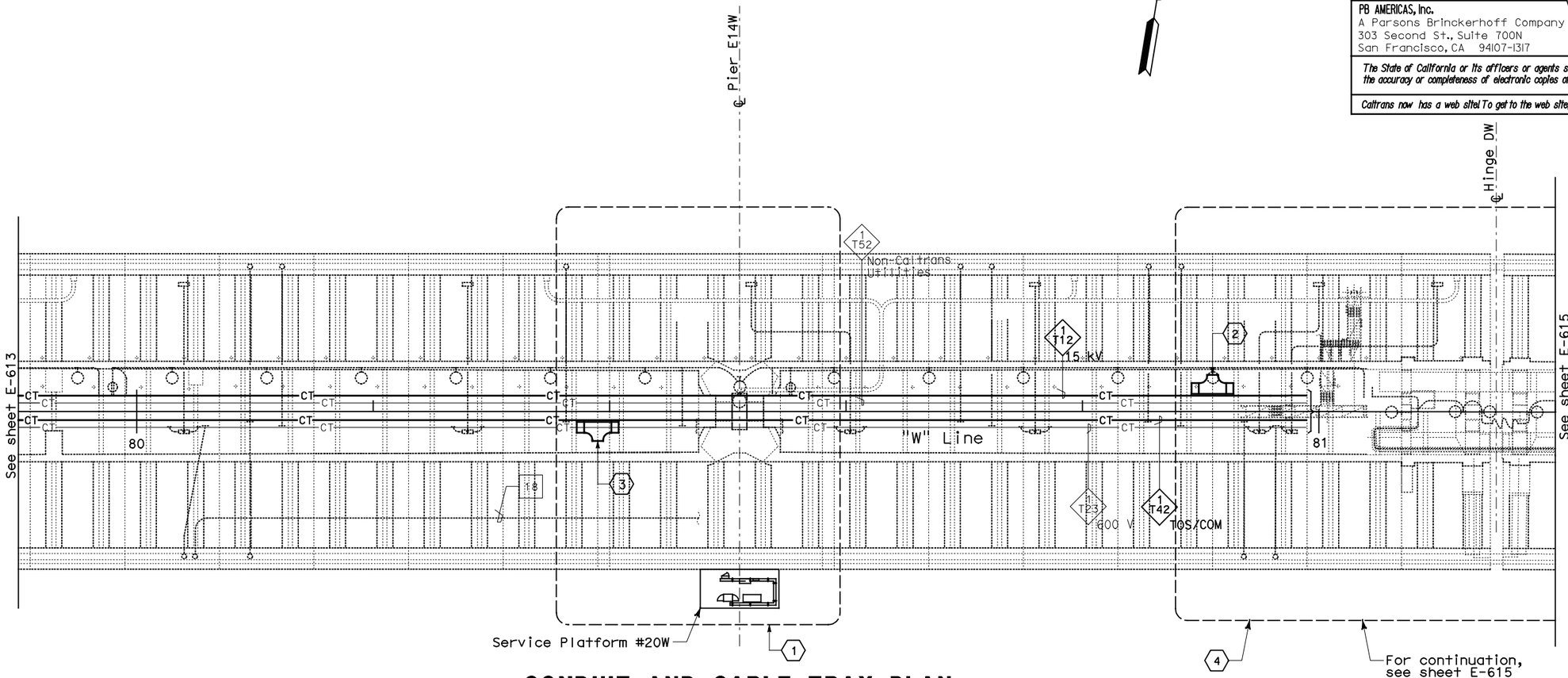

CONDUIT AND CABLE TRAY PLAN

NOTES:

1. This plan sheet is a record drawing from Skyway Structures contract. The Contractor shall verify the existing installation. See sheet EE-75 from Skyway Structures, contract No. 04-012024.
2. The Installed components shall not be limited to the ones listed below, but shall be a complete installation. For details, see Bridge Structures Girder Westbound, typical Details sheets.
   - Furnish and install 15kV cables into existing cable tray shown on this drawing. Refer to riser diagram on sheets E-664 and E-665.
   - Furnish and install TOS fiber optic cables into existing cable tray shown on this drawing. Refer to riser diagram on sheets E-978 through E-981.
   - Inspect for system ground continuity. See sheets E-666 and E-667.
3. All cable trays shown on this drawing are existing. Bold ones are to used for pulling cable.

SHEET NOTES:

1. For Service Platform #20W details, see sheet E-652.
2. Furnish and install splice cable tray as shown on sheet E-663, plan detail 1.
3. Furnish and install splice cable tray as shown on sheet E-663, plan detail 2.
4. For Hinge DW area details, see sheet E-653.

REQUEST FOR INFORMATION NOT ADDRESSED IN THIS CCO REMAIN IN FORCE

MARK	DATE	DESCRIPTIONS	BY	CH'D	CCO#
0	03/08/10	MEP INTEGRATION	SYC	FW	110

REVISIONS

CONTRACT CHANGE ORDER NO._____
SHEET_____ OF _____

BRIDGE STRUCTURES GIRDER WESTBOUND
SKYWAY STRUCTURES
SCALE: 1:200

E-614

THIS PLAN ACCURATE FOR ELECTRICAL WORK ONLY.

ALL DIMENSIONS ARE IN METERS UNLESS OTHERWISE SHOWN

STATE OF CALIFORNIA - DEPARTMENT OF TRANSPORTATION
Caltrans

DESIGN OVERSIGHT: BEHZAD GOLEMOHAMMADI

CALCULATED/ DESIGNED BY	SYC	DATE 01/10	REVISED BY
CHECKED BY	FW	01/10	DATE REVISED

FOR REDUCED PLANS ORIGINAL SCALE IS IN MILLIMETERS 0 20 40 60 80

DGN FILE =>04-0120f1_E-614.dgn
USERNAME =>llorico

CU 04251 EA 0120F1

LAST REVISION 00-00-00
DATE PLOTTED => 06-MAY-2010
TIME PLOTTED => 18:03

DIST	COUNTY	ROUTE	KILOMETER POST TOTAL PROJECT	SHEET No	TOTAL SHEETS
04	SF, Ala	80	12.2/14.3 0.0/4.0	407a 06S16	1204

Syn Yee Chin 03/08/10
REGISTERED ELECTRICAL ENGINEER DATE

05-06-2010
PLANS APPROVAL DATE

REGISTERED PROFESSIONAL ENGINEER
SYN YEE CHIN
No. 18186
Exp. 09/30/2011
ELECTRICAL
STATE OF CALIFORNIA

PB AMERICAS, Inc.
A Parsons Brinckerhoff Company
303 Second St., Suite 700N
San Francisco, CA 94107-1317

The State of California or its officers or agents shall not be responsible for the accuracy or completeness of electronic copies of this plan sheet.

Caltrans now has a web site! To get to the web site, go to http://www.dot.ca.gov

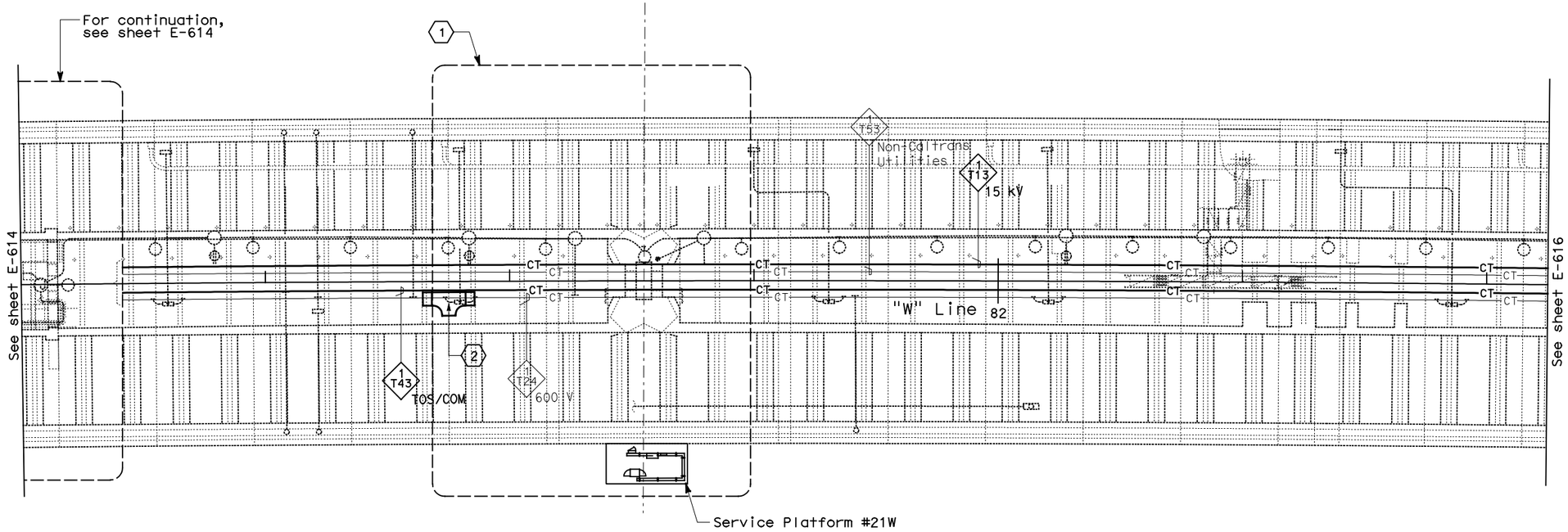

CONDUIT AND CABLE TRAY PLAN

NOTES:

1. This plan sheet is a record drawing from Skyway Structures contract. The Contractor shall verify the existing installation. See sheet EE-76 from Skyway Structures, contract No. 04-012024.
2. The Installed components shall not be limited to the ones listed below, but shall be a complete installation. For details, see Bridge Structures Girder Westbound, typical Details sheets.
   - Furnish and install 15kV cables into existing cable tray shown on this drawing. Refer to riser diagram on sheets E-664 and E-665.
   - Furnish and install TOS fiber optic cables into existing cable tray shown on this drawing. Refer to riser diagram on sheets E-978 through E-981.
   - Inspect for system ground continuity. See sheets E-666 and E-667.
3. All cable trays shown on this drawing are existing. Bold ones are to used for pulling cable.

SHEET NOTES:

(1) For Service Platform #21W details, see sheet E-654.

(2) Furnish and install splice cable tray as shown on sheet E-663, plan detail 2.

REQUEST FOR INFORMATION NOT ADDRESSED IN THIS CCO REMAIN IN FORCE					
MARK	DATE	REVISIONS DESCRIPTIONS	BY	CH'D	CCO#
0	03/08/10	MEP INTEGRATION	SYC	FW	110

CONTRACT CHANGE ORDER NO._____
SHEET _____ OF _____

BRIDGE STRUCTURES GIRDER WESTBOUND
SKYWAY STRUCTURES
SCALE: 1:200

E-615

DESIGN OVERSIGHT: BEHZAD GOLEMOHAMMADI
CALCULATED/DESIGNED BY: SYC
CHECKED BY: FW
DATE 0/10
REVISED BY: DATE REVISED
STATE OF CALIFORNIA - DEPARTMENT OF TRANSPORTATION
Caltrans

LAST REVISION 00-00-00
DATE PLOTTED => 06-MAY-2010
TIME PLOTTED => 18:03

THIS PLAN ACCURATE FOR ELECTRICAL WORK ONLY.

ALL DIMENSIONS ARE IN METERS UNLESS OTHERWISE SHOWN

FOR REDUCED PLANS ORIGINAL SCALE IS IN MILLIMETERS 0 20 40 60 80

DGN FILE =>04-0120f1_E-615.dgn
USERNAME =>llorico

CU 04251

EA 0120F1

DIST	COUNTY	ROUTE	KILOMETER POST TOTAL PROJECT	SHEET No	TOTAL SHEETS
04	SF,Ala	80	12.2/14.3 0.0/4.0	407a 06S17	1204

Syn Yee Chin 03/08/10
REGISTERED ELECTRICAL ENGINEER DATE

05-06-2010
PLANS APPROVAL DATE

REGISTERED PROFESSIONAL ENGINEER SYN YEE CHIN No. 18186 Exp. 09/30/2011 ELECTRICAL STATE OF CALIFORNIA

PB AMERICAS, Inc.
A Parsons Brinckerhoff Company
303 Second St., Suite 700N
San Francisco, CA 94107-1317

The State of California or its officers or agents shall not be responsible for the accuracy or completeness of electronic copies of this plan sheet.

Caltrans now has a web site! To get to the web site, go to http://www.dot.ca.gov

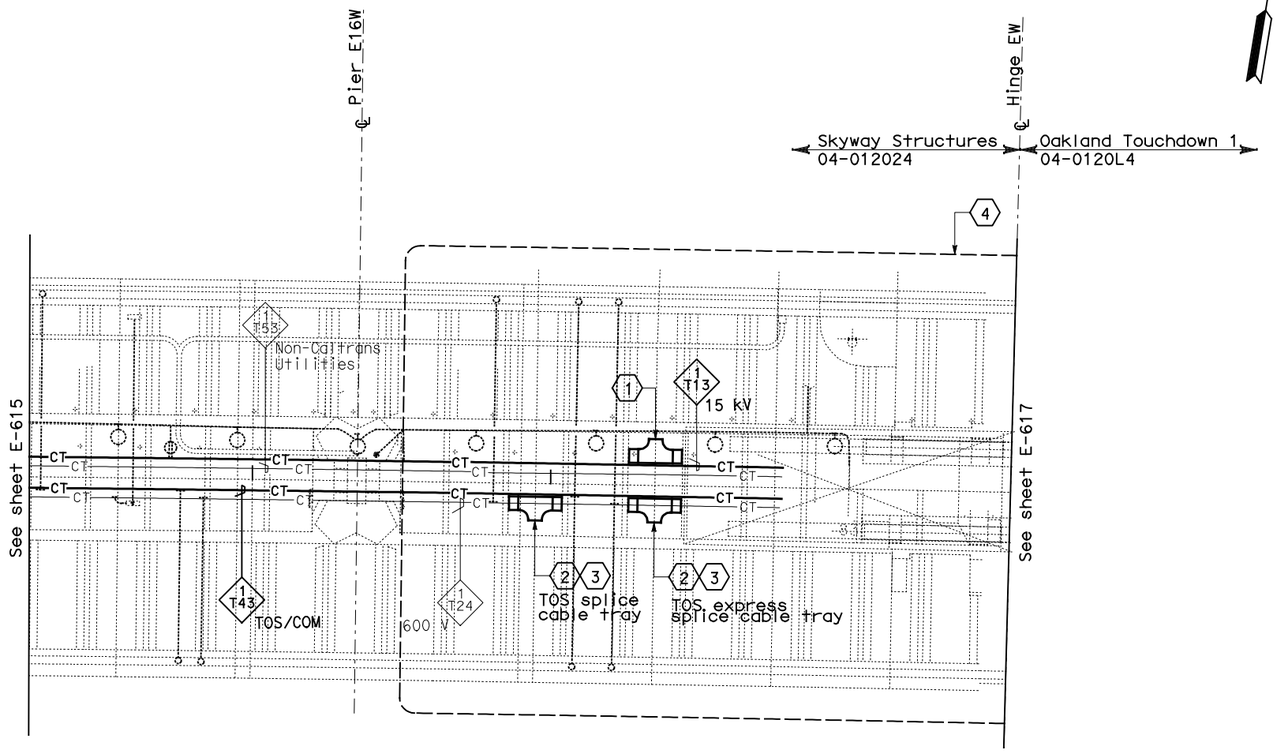

CONDUIT AND CABLE TRAY PLAN

NOTES:

1. This plan sheet is a record drawing from Skyway Structures contract. The Contractor shall verify the existing installation. See sheet EE-77 from Skyway Structures, contract No. 04-012024.
2. The installed components shall not be limited to the ones listed below, but shall be a complete installation. For details, see Bridge Structures Girder Westbound, typical Details sheets.
   - Furnish and install 15kV cables into existing cable tray shown on this drawing. Refer to riser diagram on sheets E-664 and E-665.
   - Furnish and install TOS fiber optic cables into existing cable tray shown on this drawing. Refer to riser diagram on sheets E-978 through E-981.
   - Inspect for system ground continuity. See sheets E-666 and E-667.
3. All cable trays shown on this drawing are existing. Bold ones are to used for pulling cable.

SHEET NOTES:

1. Furnish and install splice cable tray as shown on sheet E-663, plan detail 1.
2. Furnish and install splice cable tray as shown on sheet E-663, plan detail 2.
3. Contractor to evaluate possibility of eliminating this TOS splice at this location to meet overall design intent. Refer to TOS drawings.
4. For Hinge EW area details, see sheet E-655.

REQUEST FOR INFORMATION NOT ADDRESSED IN THIS CCO REMAIN IN FORCE

MARK	DATE	DESCRIPTIONS	BY	CH'D	CCO#
0	03/08/10	MEP INTEGRATION	SYC	FW	110

REVISIONS

CONTRACT CHANGE ORDER NO._____
SHEET _____ OF _____

BRIDGE STRUCTURES GIRDER WESTBOUND
SKYWAY STRUCTURES
SCALE: 1:200

E-616

THIS PLAN ACCURATE FOR ELECTRICAL WORK ONLY.

ALL DIMENSIONS ARE IN METERS UNLESS OTHERWISE SHOWN

STATE OF CALIFORNIA - DEPARTMENT OF TRANSPORTATION
Caltrans

DESIGN OVERSIGHT: BEHZAD GOLEMOHAMMADI
CALCULATED/DESIGNED BY: SYC DATE 01/10
CHECKED BY: FW 01/10
REVISED BY
DATE REVISED

FOR REDUCED PLANS ORIGINAL SCALE IS IN MILLIMETERS 0 20 40 60 80

DGN FILE =>04-0120f1_E-616.dgn
USERNAME =>llorico

CU 04251

EA 0120F1

LAST REVISION 00-00-00
DATE PLOTTED => 06-MAY-2010
TIME PLOTTED => 18:03

DIST	COUNTY	ROUTE	KILOMETER POST TOTAL PROJECT	SHEET No	TOTAL SHEETS
04	SF, Ala	80	12.2/14.3 0.0/4.0	407a 06S18	1204

Caltrans Metric

Syn Yee Chin 03/08/10
REGISTERED ELECTRICAL ENGINEER DATE

REGISTERED PROFESSIONAL ENGINEER
SYN YEE CHIN
No. 18186
Exp. 09/30/2011
ELECTRICAL
STATE OF CALIFORNIA

05-06-2010
PLANS APPROVAL DATE

PB AMERICAS, Inc.
A Parsons Brinckerhoff Company
303 Second St., Suite 700N
San Francisco, CA 94107-1317

The State of California or its officers or agents shall not be responsible for the accuracy or completeness of electronic copies of this plan sheet.

Caltrans now has a web site! To get to the web site, go to http://www.dot.ca.gov

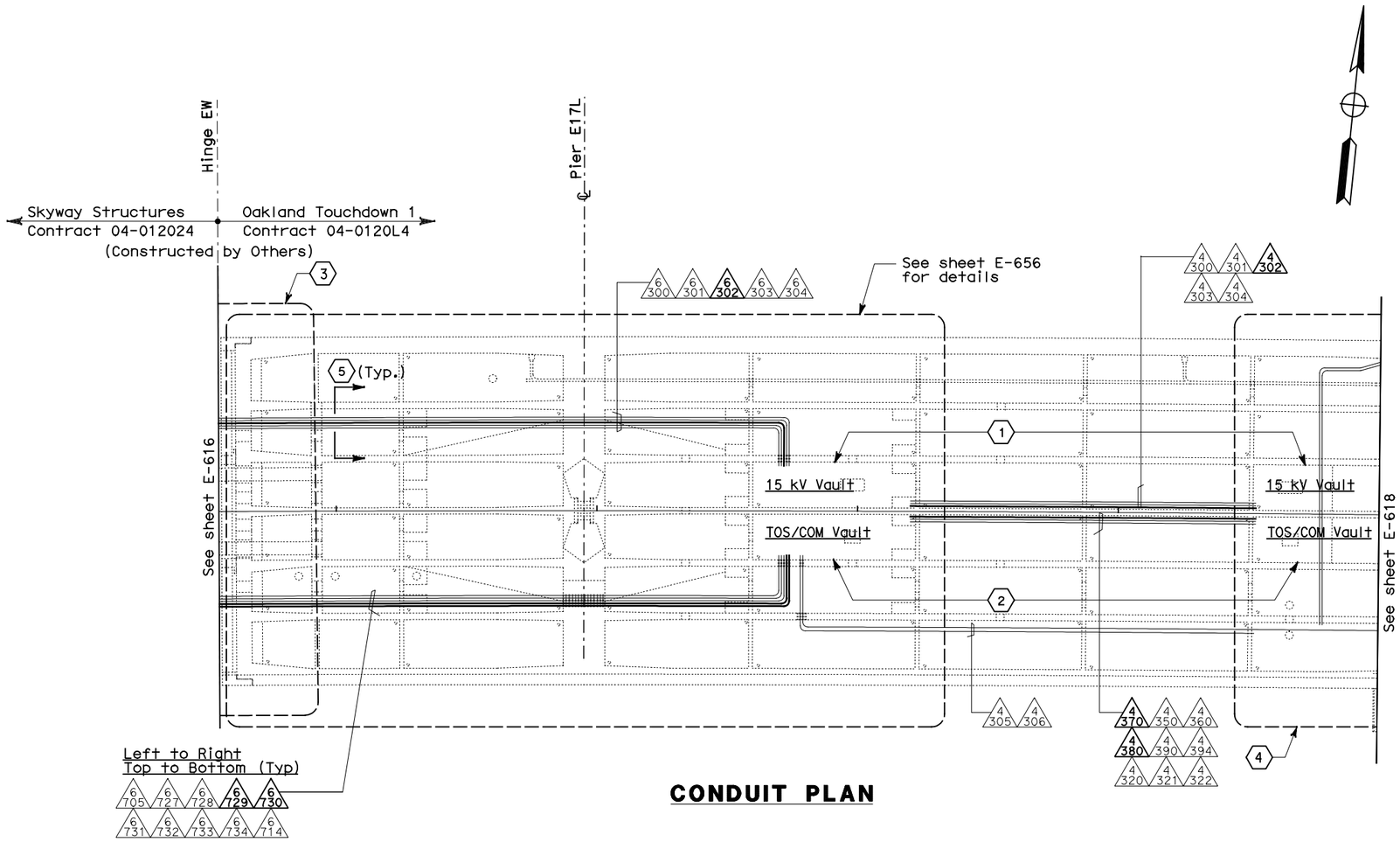

CONDUIT PLAN

NOTES:

1. This plan sheet is a record drawing from Oakland Touchdown 1 contract. The Contractor shall verify the existing installation. See sheet E-13 of Oakland Touchdown 1, contract No. 04-0120L4.
2. The installed components shall not be limited to the ones listed below, but shall be a complete installation. For details, see Bridge Structures Girder Westbound, typical Details sheets.
   - Furnish and install 15 kV cables into existing conduit shown on this drawing. Refer to riser diagram on sheets E-664 and E-665.
   - Furnish and install TOS fiber optic cables into existing conduits shown on this drawing. Refer to riser diagram on sheets E-978 through E-981.
   - Inspect for system ground continuity. See sheets E-666 and E-667.
3. All conduits shown on this drawing are existing. Bold ones are to be used for pulling cable.

SHEET NOTES:

1. For details on racking 15 kV cables inside vault, see E-663A Detail 3A.
2. For details on racking TOS fiber inside vault, see E-663A, Detail 3A.
3. For Hinge EW area details, see sheet E-655.
4. See sheet E-657 for details.
5. Cross section reference for conduit configuration.

REQUEST FOR INFORMATION NOT ADDRESSED IN THIS CCO REMAIN IN FORCE

MARK	DATE	DESCRIPTIONS	BY	CH'D	CCO#
		REVISIONS			
0	03/08/10	MEP INTEGRATION	SYC	FW	110

CONTRACT CHANGE ORDER NO._____
SHEET _____ OF _____

BRIDGE STRUCTURES GIRDER WESTBOUND
OAKLAND APPROACH STRUCTURES
SCALE: 1:200

E-617

STATE OF CALIFORNIA - DEPARTMENT OF TRANSPORTATION
Caltrans
DESIGN OVERSIGHT
BEHZAD GOLEMOHAMMADI

CALCULATED/ DESIGNED BY	SYC	DATE 01/10	REVISED BY
CHECKED BY	FW	01/10	DATE REVISED

THIS PLAN ACCURATE FOR ELECTRICAL WORK ONLY.

ALL DIMENSIONS ARE IN METERS UNLESS OTHERWISE SHOWN

FOR REDUCED PLANS ORIGINAL SCALE IS IN MILLIMETERS 0 20 40 60 80

DGN FILE =>04-0120f1_E-617.dgn
USERNAME =>llorico

CU 04251

EA 0120F1

LAST REVISION 00-00-00
DATE PLOTTED => 06-MAY-2010
TIME PLOTTED => 18:03

DIST	COUNTY	ROUTE	KILOMETER POST TOTAL PROJECT	SHEET No	TOTAL SHEETS
04	SF, Ala	80	12.2/14.3 0.0/4.0	407a 06S19	1204

Syn Yee Chin 03/08/10
REGISTERED ELECTRICAL ENGINEER DATE

05-06-2010
PLANS APPROVAL DATE

REGISTERED PROFESSIONAL ENGINEER
SYN YEE CHIN
No. 18186
Exp. 09/30/2011
ELECTRICAL
STATE OF CALIFORNIA

PB AMERICAS, Inc.
A Parsons Brinckerhoff Company
303 Second St., Suite 700N
San Francisco, CA 94107-1317

The State of California or its officers or agents shall not be responsible for the accuracy or completeness of electronic copies of this plan sheet.

Caltrans now has a web site! To get to the web site, go to http://www.dot.ca.gov

Caltrans Metric

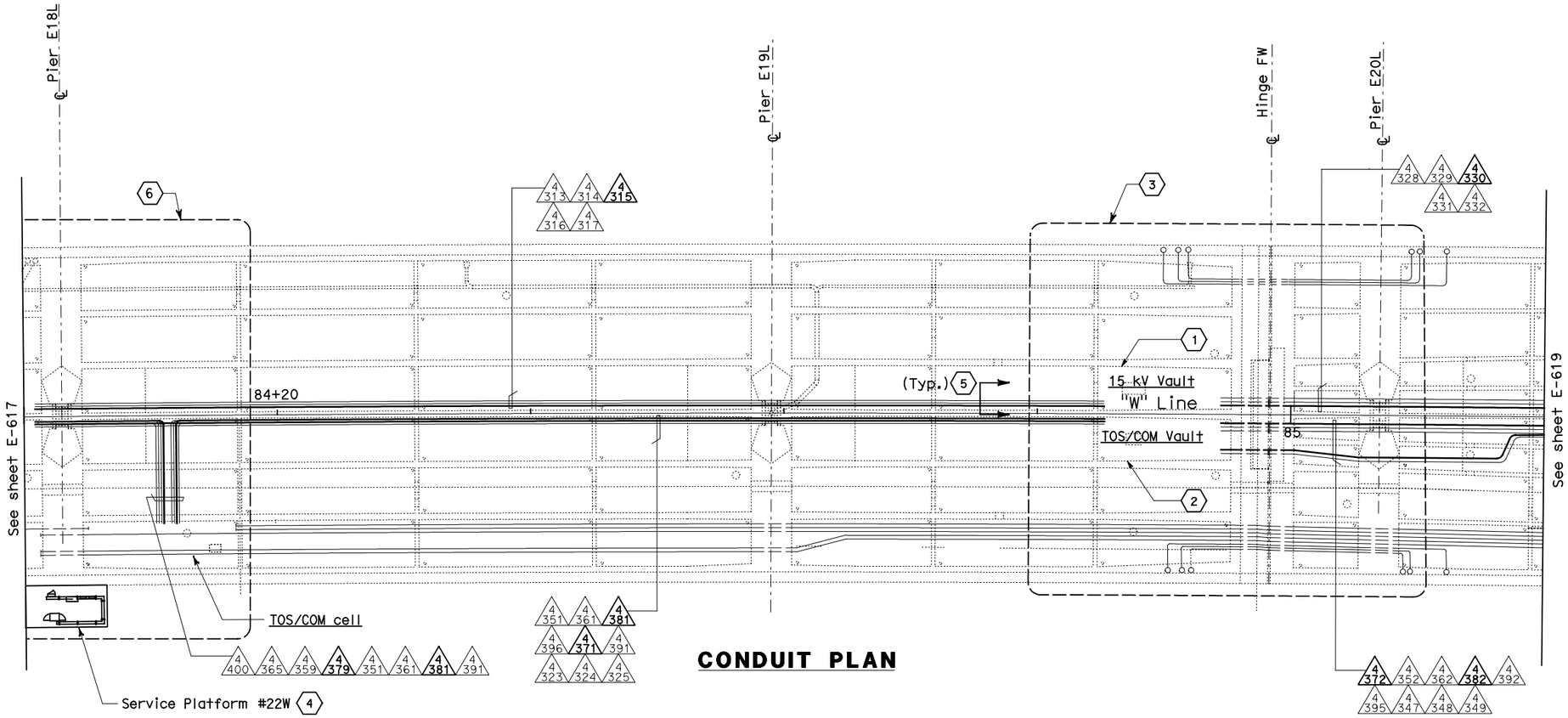

CONDUIT PLAN

NOTES:

1. This plan sheet is a record drawing from Oakland Touchdown 1 contract. The Contractor shall verify the existing installation. See sheet E-14 of Oakland Touchdown 1, contract No. 04-0120L4.
2. The installed components shall not be limited to the ones listed below, but shall be a complete installation. For details, see Bridge Structures Girder Westbound, typical Details sheets.
   - Furnish and install 15 kV cables into existing conduit shown on this drawing. Refer to riser diagram on sheets E-664 and E-665.
   - Furnish and install TOS fiber optic cables into existing conduits shown on this drawing. Refer to riser diagram on sheets E-978 through E-981.
   - Inspect for system ground continuity.
3. All conduits shown on this drawing are existing. Bold ones are to be used for pulling cable.

SHEET NOTES:

1. For details on racking 15 kV cables inside vault, see E-663A, Detail 3A.
2. For details on racking TOS fiber inside vault, see E-663A, Detail 3A.
3. For Hinge FW area details, see sheet E-659.
4. For Service Platform #22W details, see sheet E-658.
5. Cross section reference for conduit configuration.
6. See sheet E-657 for details.

REQUEST FOR INFORMATION NOT ADDRESSED IN THIS CCO REMAIN IN FORCE

MARK	DATE	DESCRIPTIONS	BY	CH'D	CCO#
		REVISIONS			
0	03/08/10	MEP INTEGRATION	SYC	FW	110

CONTRACT CHANGE ORDER NO._____
SHEET _____ OF _____

BRIDGE STRUCTURES GIRDER WESTBOUND
OAKLAND APPROACH STRUCTURES
SCALE: 1:200

E-618

DESIGN OVERSIGHT
BEHZAD GOLEMOHAMMADI

STATE OF CALIFORNIA - DEPARTMENT OF TRANSPORTATION
Caltrans

	CALCULATED/ DESIGNED BY	SYC	DATE 01/10	REVISED BY
	CHECKED BY	FW	01/10	DATE REVISED

THIS PLAN ACCURATE FOR ELECTRICAL WORK ONLY.

ALL DIMENSIONS ARE IN METERS UNLESS OTHERWISE SHOWN

FOR REDUCED PLANS ORIGINAL SCALE IS IN MILLIMETERS 0 20 40 60 80

DGN FILE =>04-0120f1_E-618.dgn
USERNAME =>llorico

CU 04251

EA 0120F1

LAST REVISION 00-00-00
DATE PLOTTED => 06-MAY-2010
TIME PLOTTED => 18:04

DIST	COUNTY	ROUTE	KILOMETER POST TOTAL PROJECT	SHEET No	TOTAL SHEETS
04	SF,Ala	80	12.2/14.3 0.0/4.0	407a 06S20	1204

Syn Yee Chin 03/08/10
REGISTERED ELECTRICAL ENGINEER DATE

05-06-2010
PLANS APPROVAL DATE

REGISTERED PROFESSIONAL ENGINEER SYN YEE CHIN No. 18186 Exp. 09/30/2011 ELECTRICAL STATE OF CALIFORNIA

PB AMERICAS, Inc.
A Parsons Brinckerhoff Company
303 Second St., Suite 700N
San Francisco, CA 94107-1317

The State of California or its officers or agents shall not be responsible for the accuracy or completeness of electronic copies of this plan sheet.

Caltrans now has a web site! To get to the web site, go to http://www.dot.ca.gov

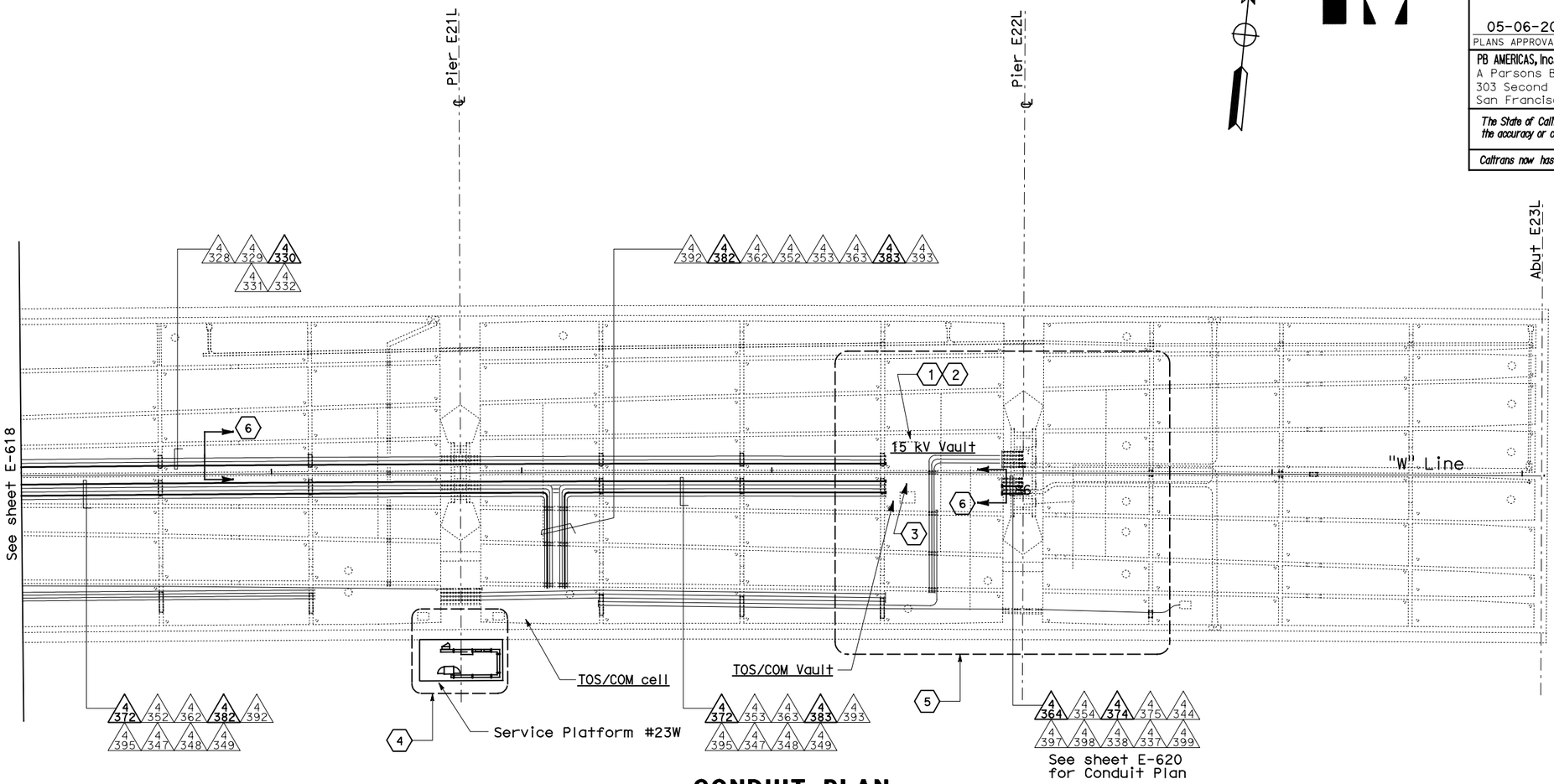

CONDUIT PLAN

NOTES:

1. This plan sheet is a record drawing from Oakland Touchdown 1 contract. The Contractor shall verify the existing installation. See sheet E-15 of Oakland Touchdown 1, contract No. 04-0120L4.
2. The installed components shall not be limited to the ones listed below, but shall be a complete installation. For details, see Bridge Structures Girder Westbound, typical Details sheets.
   - Furnish and install 15 kV cables into existing conduit shown on this drawing. Refer to riser diagram on sheets E-664 and E-665.
   - Furnish and install TOS fiber optic cables into existing conduits shown on this drawing. Refer to riser diagram on sheets E-978 through E-981.
   - Inspect for system ground continuity.
3. All conduits shown on this drawing are existing. Bold ones are to be used for pulling cable.

SHEET NOTES:

1. Contractor shall loop 50 m of additional 15 kV cable in a coil in the vault for future splice.
2. For details on racking 15 kV cables inside vault, see E-663A, Detail 3A.
3. For details on racking TOS fiber inside vault, see E-663A, Detail 3A.
4. For Service Platform #23W details, see sheet E-661.
5. See sheet E-662 for details.
6. Cross section reference for conduit configuration.

REQUEST FOR INFORMATION NOT ADDRESSED IN THIS CCO REMAIN IN FORCE

MARK	DATE	DESCRIPTIONS	BY	CH'D	CCO#
0	03/08/10	MEP INTEGRATION	SYC	FW	110

REVISIONS

CONTRACT CHANGE ORDER NO._____
SHEET _____ OF _____

BRIDGE STRUCTURES GIRDER WESTBOUND
OAKLAND APPROACH STRUCTURES
SCALE: 1:200

E-619

THIS PLAN ACCURATE FOR ELECTRICAL WORK ONLY.

ALL DIMENSIONS ARE IN METERS UNLESS OTHERWISE SHOWN

FOR REDUCED PLANS ORIGINAL SCALE IS IN MILLIMETERS 0 20 40 60 80

DGN FILE =>04-0120f1_E-619.dgn
USERNAME =>llorico

CU 04251 EA 0120F1

STATE OF CALIFORNIA - DEPARTMENT OF TRANSPORTATION
Caltrans

DESIGN OVERSIGHT BEHZAD GOLEMOHAMMADI

CALCULATED/DESIGNED BY SYC DATE 01/10 REVISED BY
CHECKED BY FW 01/10 DATE REVISED

LAST REVISION 00-00-00
DATE PLOTTED => 06-MAY-2010
TIME PLOTTED => 18:04

DIST	COUNTY	ROUTE	KILOMETER POST TOTAL PROJECT	SHEET No	TOTAL SHEETS
04	SF,Ala	80	12.2/14.3 0.0/4.0	407a 06S21	1204

Caltrans Metric

Syn Yee Chin 03/08/10
REGISTERED ELECTRICAL ENGINEER DATE

05-06-2010
PLANS APPROVAL DATE

REGISTERED PROFESSIONAL ENGINEER SYN YEE CHIN No. 18186 Exp. 09/30/2011 ELECTRICAL STATE OF CALIFORNIA

PB AMERICAS, Inc.
A Parsons Brinckerhoff Company
303 Second St., Suite 700N
San Francisco, CA 94107-1317

The State of California or its officers or agents shall not be responsible for the accuracy or completeness of electronic copies of this plan sheet.

Caltrans now has a web site! To get to the web site, go to http://www.dot.ca.gov

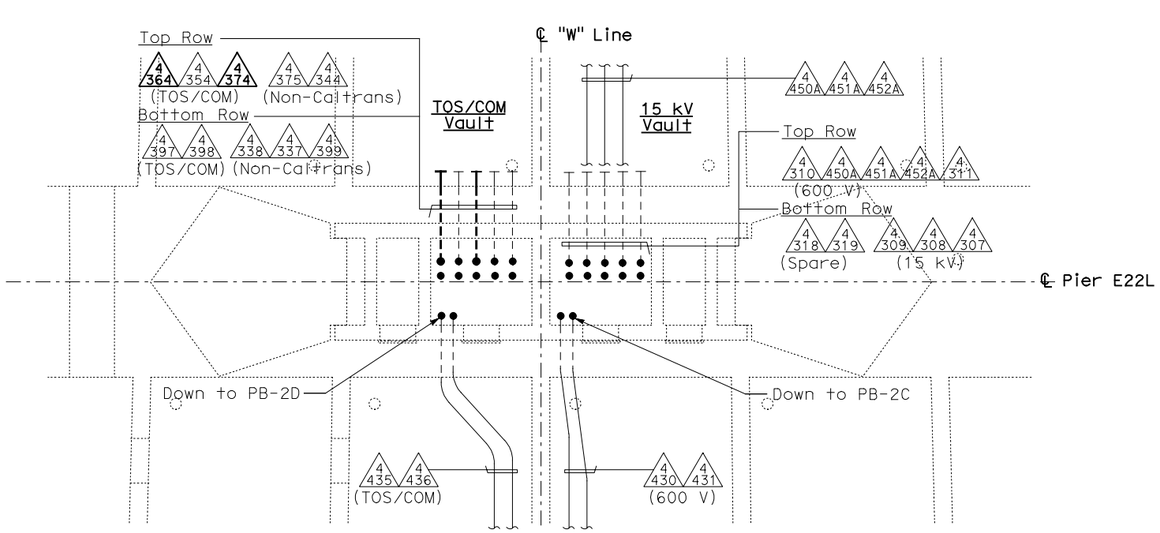

PIER E22L - GIRDER CONDUIT PLAN

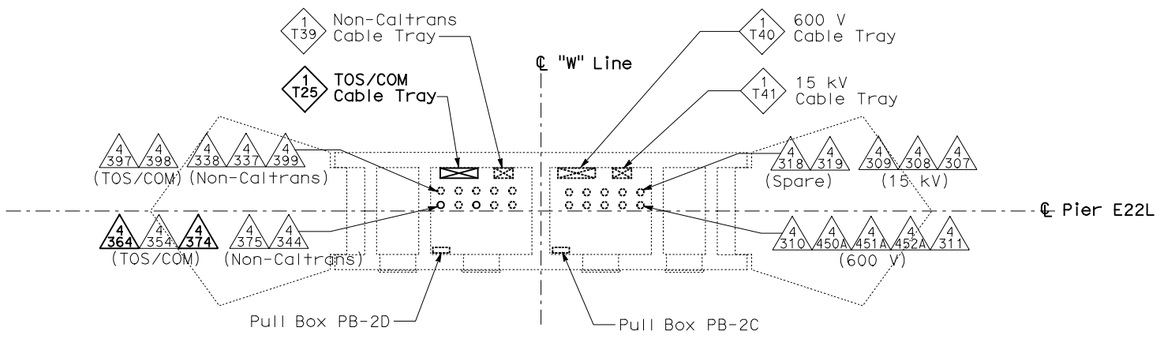

PIER E22L - INSIDE PIER CONDUIT AND CABLE TRAY PLAN

NOTES:

1. This plan sheet is a record drawing from Oakland Touchdown 1 contract. The Contractor shall verify the existing installation. See sheet E-30 of Oakland Touchdown 1, contract No. 04-0120L4.
2. The installed components shall not be limited to the ones listed below, but shall be a complete installation. For details, see Bridge Structures Girder Westbound, typical Detail sheets.
   - Furnish and install (4) one-inch inner-ducts with TOS fiber optic cables in one inner-duct, into existing conduit shown on this drawing. Refer to riser diagram on sheets E-978 through E-981 and detail on E-973.
   - Inspect for system ground continuity.
3. All cable trays and conduits shown on this drawing are existing. Bold ones are to be used for pulling cable.

REQUEST FOR INFORMATION NOT ADDRESSED IN THIS CCO REMAIN IN FORCE

MARK	DATE	DESCRIPTIONS	BY	CH'D	CCO#
0	03/08/10	MEP INTEGRATION	SYC	FW	110

REVISIONS

CONTRACT CHANGE ORDER NO._____
SHEET _____ OF _____

BRIDGE STRUCTURES GIRDER WESTBOUND
OAKLAND APPROACH STRUCTURES
SCALE 1:50

E-620

THIS PLAN ACCURATE FOR ELECTRICAL WORK ONLY.

ALL DIMENSIONS ARE IN METERS UNLESS OTHERWISE SHOWN

STATE OF CALIFORNIA - DEPARTMENT OF TRANSPORTATION
Caltrans

DESIGN OVERSIGHT: BEHZAD GOLEMOHAMMADI

CALCULATED/DESIGNED BY: SYC DATE 01/10
CHECKED BY: FW 01/10
REVISED BY
DATE REVISED

FOR REDUCED PLANS ORIGINAL SCALE IS IN MILLIMETERS 0 20 40 60 80

DGN FILE =>04-0120f1_E-620.dgn
USERNAME =>llorico

CU 04251

EA 0120F1

LAST REVISION 00-00-00
DATE PLOTTED => 06-MAY-2010
TIME PLOTTED => 18:04

REQUEST FOR INFORMATION NOT ADDRESSED IN THIS CCO REMAIN IN FORCE

MARK	DATE	REVISIONS DESCRIPTIONS	BY	CH'D	CCO#
0	03/08/10	MEP INTEGRATION	SYC	FW	110

CONTRACT CHANGE ORDER NO._____
SHEET _____ OF _____

Caltrans Metric

DIST	COUNTY	ROUTE	KILOMETER POST TOTAL PROJECT	SHEET No	TOTAL SHEETS
04	SF, Ala	80	12.2/14.3 0.0/4.0	407a 06S22	1204

Syn Yee Chin 03/08/10
REGISTERED ELECTRICAL ENGINEER DATE

05-06-2010
PLANS APPROVAL DATE

REGISTERED PROFESSIONAL ENGINEER
SYN YEE CHIN
No. 18186
Exp. 09/30/2011
ELECTRICAL
STATE OF CALIFORNIA

PB AMERICAS, Inc.
A Parsons Brinckerhoff Company
303 Second St., Suite 700N
San Francisco, CA 94107-1317

The State of California or its officers or agents shall not be responsible for the accuracy or completeness of electronic copies of this plan sheet.

Caltrans now has a web site! To get to the web site, go to http://www.dot.ca.gov

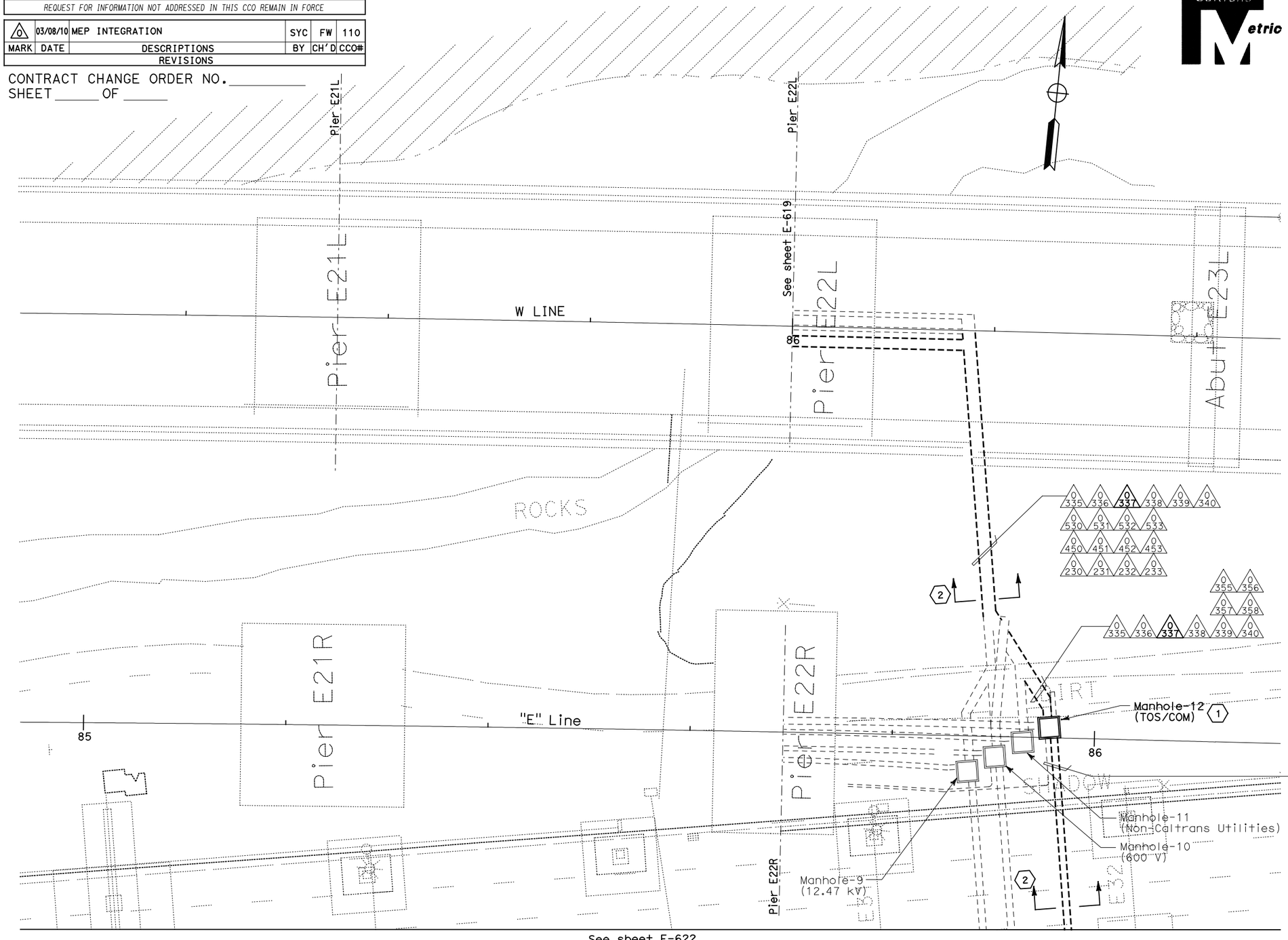

See sheet E-622

PLAN

NOTES:

1. This plan sheet is a record drawing from Oakland Touchdown 1 contract. The Contractor shall verify the existing installation. See sheet E-81 of Oakland Touchdown 1, contract No. 04-0120L4.
2. The Installed components shall not be limited to the ones listed below, but shall be a complete installation. For details, see Bridge Structures Girder Westbound, typical Details sheets.
   - Furnish and install (4) one-inch inner-ducts with TOS fiber optic cables in one inner-duct, into existing conduit shown on this drawing. Refer to riser diagram on sheets E-978 through E-981 and detail on E-973.
3. All conduits shown on this drawing are existing. Bold ones are to be used for pulling cable.

SHEET NOTES:

(1) For details on racking TOS fiber inside manhole, see E-663A, Detail 3.

(2) Cross section reference for conduit configuration.

BRIDGE STRUCTURES GIRDER WESTBOUND
OAKLAND APPROACH STRUCTURES
UNDERGROUND

SCALE: 1:200

E-621

THIS PLAN ACCURATE FOR ELECTRICAL WORK ONLY.

ALL DIMENSIONS ARE IN METERS UNLESS OTHERWISE SHOWN

FOR REDUCED PLANS ORIGINAL SCALE IS IN MILLIMETERS 0 20 40 60 80

DGN FILE =>04-0120f1_E-621.dgn
USERNAME =>llorico

CU 04251 EA 0120F1

DESIGN OVERSIGHT
BEHZAD GOLEMOHAMMADI

CALCULATED/ DESIGNED BY SYC
CHECKED BY FW

DATE	REVISED BY
01/10	DATE REVISED

STATE OF CALIFORNIA - DEPARTMENT OF TRANSPORTATION
Caltrans

LAST REVISION 00-00-00
DATE PLOTTED => 06-MAY-2010
TIME PLOTTED => 18:04

DIST	COUNTY	ROUTE	KILOMETER POST TOTAL PROJECT	SHEET No	TOTAL SHEETS
04	SF, Ala	80	12.2/14.3 0.0/4.0	407a 06S23	1204

Syn Yee Chin 03/08/10
REGISTERED ELECTRICAL ENGINEER DATE

SYN YEE CHIN No. 18186 Exp. 09/30/2011 ELECTRICAL — REGISTERED PROFESSIONAL ENGINEER — STATE OF CALIFORNIA

05-06-2010
PLANS APPROVAL DATE

PB AMERICAS, Inc.
A Parsons Brinckerhoff Company
303 Second St., Suite 700N
San Francisco, CA 94107-1317

The State of California or its officers or agents shall not be responsible for the accuracy or completeness of electronic copies of this plan sheet.

Caltrans now has a web site! To get to the web site, go to http://www.dot.ca.gov

Caltrans Metric

0 320 0 321 0 322
0 323 0 324 0 325
0 326 0 327 0 328
0 329 0 330 0 331

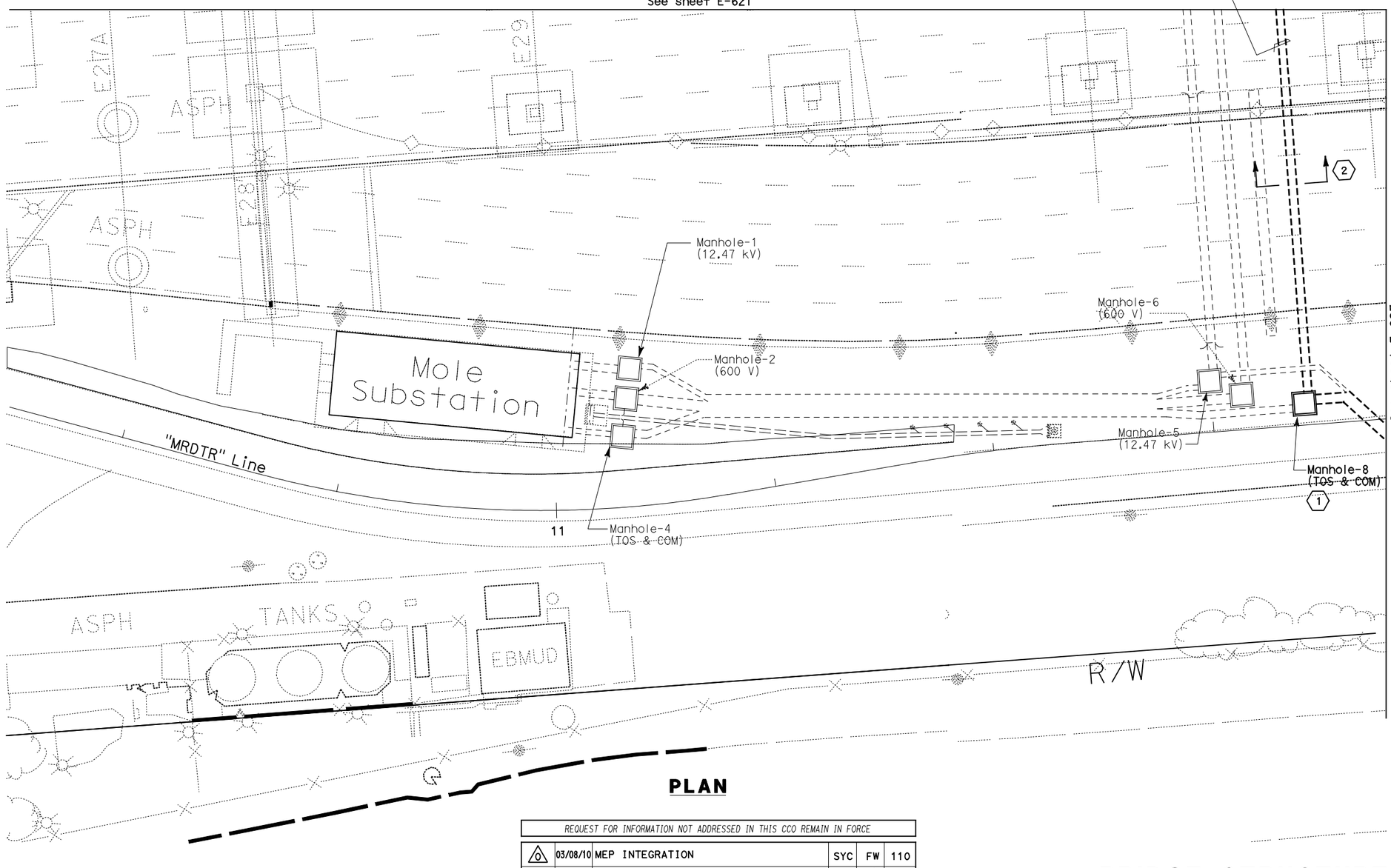

PLAN

NOTES:

1. This plan sheet is a record drawing from Oakland Touchdown 1 contract. The Contractor shall verify the existing installation. See sheet E-80 of Oakland Touchdown 1, contract No. 04-0120L4.
2. The installed components shall not be limited to the ones listed below, but shall be a complete installation. For details, see Bridge Structures Girder Westbound, typical Details sheets.
   - Furnish and install (4) one-inch inner-ducts with TOS fiber optic cables in one inner-duct, into existing conduit shown on this drawing. Refer to riser diagram on sheets E-978 through E-981 and detail on E-973.
3. All conduits shown on this drawing are existing. Bold ones are to be use for pulling cable.

SHEET NOTES:

(1) For details on racking TOS fiber inside manhole, see E-663A, Detail 3.

(2) Cross section reference for conduit configuration.

REQUEST FOR INFORMATION NOT ADDRESSED IN THIS CCO REMAIN IN FORCE						
MARK	DATE	DESCRIPTIONS	BY	CH'D	CCO#
0	03/08/10	MEP INTEGRATION	SYC	FW	110
REVISIONS					

CONTRACT CHANGE ORDER NO._____
SHEET _____ OF _____

BRIDGE STRUCTURES GIRDER WESTBOUND
OAKLAND APPROACH STRUCTURES
UNDERGROUND

SCALE: 1:200

E-622

STATE OF CALIFORNIA - DEPARTMENT OF TRANSPORTATION
Caltrans

DESIGN OVERSIGHT
BEHZAD GOLEMOHAMMADI

CALCULATED/ DESIGNED BY	CHECKED BY	DATE	REVISED BY	DATE REVISED
SYC	FW	01/10		

LAST REVISION 00-00-00
DATE PLOTTED => 06-MAY-2010
TIME PLOTTED => 18:04

THIS PLAN ACCURATE FOR ELECTRICAL WORK ONLY.

ALL DIMENSIONS ARE IN METERS UNLESS OTHERWISE SHOWN

FOR REDUCED PLANS ORIGINAL SCALE IS IN MILLIMETERS 0 20 40 60 80

DGN FILE =>04-0120f1_E-622.dgn
USERNAME =>llorico

CU 04251

EA 0120F1

DIST	COUNTY	ROUTE	KILOMETER POST TOTAL PROJECT	SHEET No	TOTAL SHEETS
04	SF, Ala	80	12.2/14.3 0.0/4.0	407a 06S24	1204

Syn Yee Chin 03/08/10
REGISTERED ELECTRICAL ENGINEER DATE

05-06-2010
PLANS APPROVAL DATE

REGISTERED PROFESSIONAL ENGINEER
SYN YEE CHIN
No. 18186
Exp. 09/30/2011
ELECTRICAL
STATE OF CALIFORNIA

PB AMERICAS, Inc.
A Parsons Brinckerhoff Company
303 Second St., Suite 700N
San Francisco, CA 94107-1317

The State of California or its officers or agents shall not be responsible for the accuracy or completeness of electronic copies of this plan sheet.

Caltrans now has a web site! To get to the web site, go to http://www.dot.ca.gov

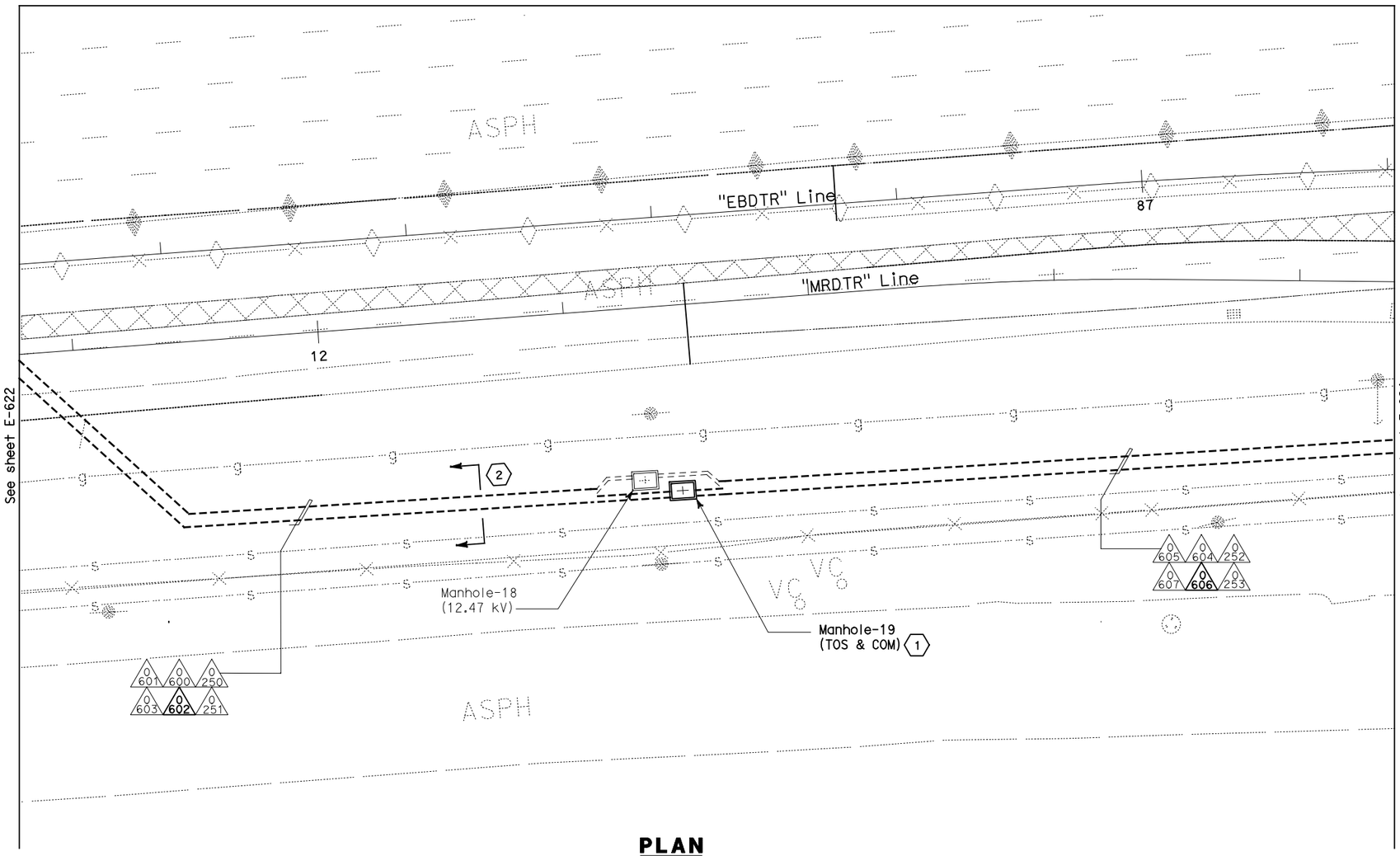

PLAN

NOTES:

1. This plan sheet is a record drawing from Oakland Touchdown 1 contract. The Contractor shall verify the existing installation. See sheet E-82 of Oakland Touchdown 1, contract No. 04-0120L4.
2. The installed components shall not be limited to the ones listed below, but shall be a complete installation. For details, see Bridge Structures Girder Westbound, typical Details sheets.
   - Furnish and install (4) one-inch inner-ducts with TOS fiber optic cables in one inner-duct, into existing conduit shown on this drawing. Refer to riser diagram on sheets E-978 through E-981 and detail on E-973.
3. All conduits shown on this drawing are existing. Bold ones are to be used for pulling cable.

SHEET NOTES:

(1) For details on racking TOS fiber inside manhole, see E-663A, Detail 3.

(2) Cross section reference for conduit configuration.

REQUEST FOR INFORMATION NOT ADDRESSED IN THIS CCO REMAIN IN FORCE

MARK	DATE	DESCRIPTIONS	BY	CH'D	CCO#
		REVISIONS			
0	03/08/10	MEP INTEGRATION	SYC	FW	110

CONTRACT CHANGE ORDER NO._____
SHEET _____ OF _____

BRIDGE STRUCTURES GIRDER WESTBOUND
OAKLAND APPROACH STRUCTURES
UNDERGROUND

SCALE: 1:200

E-623

THIS PLAN ACCURATE FOR ELECTRICAL WORK ONLY.

ALL DIMENSIONS ARE IN METERS UNLESS OTHERWISE SHOWN

FOR REDUCED PLANS ORIGINAL SCALE IS IN MILLIMETERS 0 20 40 60 80

DGN FILE =>04-0120f1_E-623.dgn
USERNAME =>llorico

CU 04251

EA 0120F1

DESIGN OVERSIGHT BEHZAD GOLEMOHAMMADI

CALCULATED/DESIGNED BY SYC
CHECKED BY FW

MARK	DATE	REVISED BY	DATE REVISED
0	03/10	01/10	

STATE OF CALIFORNIA - DEPARTMENT OF TRANSPORTATION
Caltrans

LAST REVISION 00-00-00
DATE PLOTTED => 06-MAY-2010
TIME PLOTTED => 18:04

DIST	COUNTY	ROUTE	KILOMETER POST TOTAL PROJECT	SHEET No	TOTAL SHEETS
04	SF, Ala	80	12.2/14.3 0.0/4.0	407a 06S25	1204

Caltrans Metric

Syn Yee Chin 03/08/10
REGISTERED ELECTRICAL ENGINEER DATE

REGISTERED PROFESSIONAL ENGINEER
SYN YEE CHIN
No. 18186
Exp. 09/30/2011
ELECTRICAL
STATE OF CALIFORNIA

05-06-2010
PLANS APPROVAL DATE

PB AMERICAS, Inc.
A Parsons Brinckerhoff Company
303 Second St., Suite 700N
San Francisco, CA 94107-1317

The State of California or its officers or agents shall not be responsible for the accuracy or completeness of electronic copies of this plan sheet.

Caltrans now has a web site! To get to the web site, go to http://www.dot.ca.gov

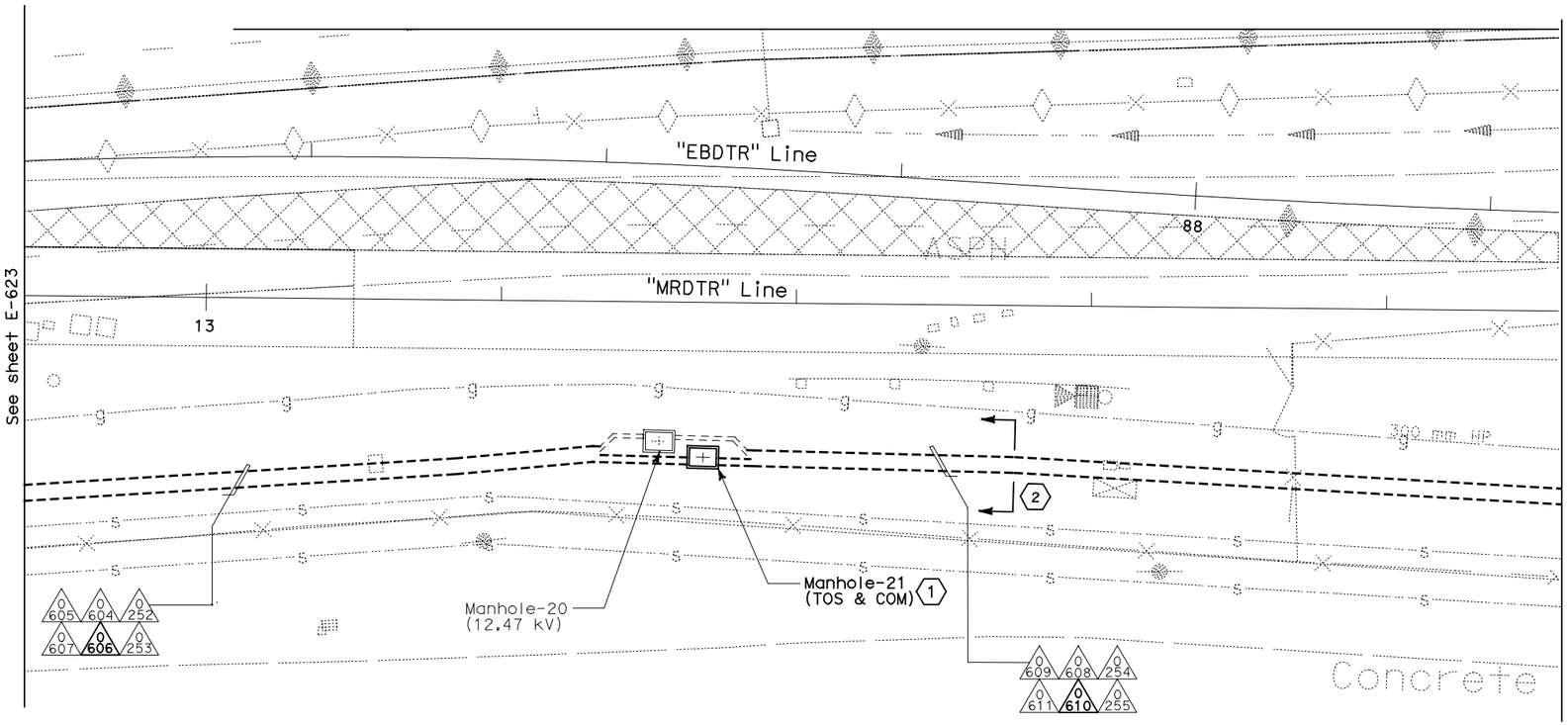

PLAN

NOTES:

1. This plan sheet is a record drawing from Oakland Touchdown 1 contract. The Contractor shall verify the existing installation. See sheet E-83 of Oakland Touchdown 1, contract No. 04-0120L4.
2. The installed components shall not be limited to the ones listed below, but shall be a complete installation. For details, see Bridge Structures Girder Westbound, typical Details sheets.
   - Furnish and install (4) one-inch inner-ducts with TOS fiber optic cables in one inner-duct, into existing conduit shown on this drawing. Refer to riser diagram on sheets E-978 through E-981 and detail on E-973.
3. All conduits shown on this drawing are existing. Bold ones are to be used for pulling cable.

SHEET NOTES:

(1) For details on racking TOS fiber inside manhole, see E-663A, Detail 3.

(2) Cross section reference for conduit configuration.

REQUEST FOR INFORMATION NOT ADDRESSED IN THIS CCO REMAIN IN FORCE					
0	03/08/10	MEP INTEGRATION	SYC	FW	110
MARK	DATE	DESCRIPTIONS	BY	CH'D	CCO#
REVISIONS					

CONTRACT CHANGE ORDER NO._____
SHEET _____ OF _____

BRIDGE STRUCTURES GIRDER WESTBOUND
OAKLAND APPROACH STRUCTURES
UNDERGROUND

SCALE: 1:200

E-624

THIS PLAN ACCURATE FOR ELECTRICAL WORK ONLY.

ALL DIMENSIONS ARE IN METERS UNLESS OTHERWISE SHOWN

FOR REDUCED PLANS ORIGINAL SCALE IS IN MILLIMETERS 0 20 40 60 80

DGN FILE =>04-0120f1_E-624.dgn
USERNAME =>llorico

CU 04251

EA 0120F1

STATE OF CALIFORNIA - DEPARTMENT OF TRANSPORTATION
Caltrans

DESIGN OVERSIGHT
BEHZAD GOLEMOHAMMADI

CALCULATED/ DESIGNED BY
CHECKED BY

MARK	DATE	REVISED BY	DATE REVISED
	0/10	SYC FW	0/10

LAST REVISION 00-00-00
DATE PLOTTED => 06-MAY-2010
TIME PLOTTED => 18:04

DIST	COUNTY	ROUTE	KILOMETER POST TOTAL PROJECT	SHEET No	TOTAL SHEETS
04	SF, Ala	80	12.2/14.3 0.0/4.0	407a 06S26	1204

Syn Yee Chin 03/08/10
REGISTERED ELECTRICAL ENGINEER DATE

SYN YEE CHIN
No. 18186
Exp. 09/30/2011
ELECTRICAL
REGISTERED PROFESSIONAL ENGINEER
STATE OF CALIFORNIA

05-06-2010
PLANS APPROVAL DATE

PB AMERICAS, Inc.
A Parsons Brinckerhoff Company
303 Second St., Suite 700N
San Francisco, CA 94107-1317

The State of California or its officers or agents shall not be responsible for the accuracy or completeness of electronic copies of this plan sheet.

Caltrans now has a web site! To get to the web site, go to http://www.dot.ca.gov

Caltrans Metric

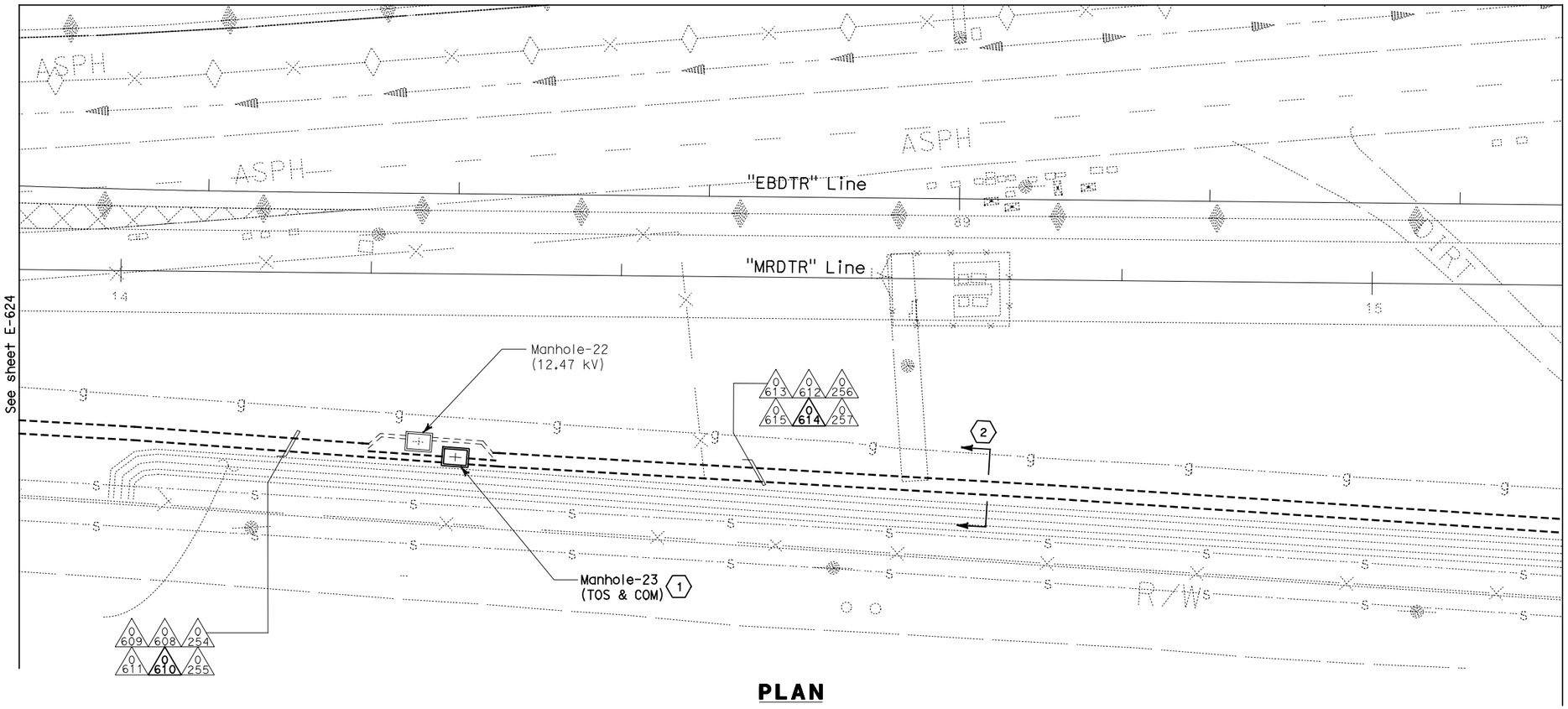

PLAN

NOTES:

1. This plan sheet is a record drawing from Oakland Touchdown 1 contract. The Contractor shall verify the existing installation. See sheet E-84 of Oakland Touchdown 1, contract No. 04-0120L4.
2. The installed components shall not be limited to the ones listed below, but shall be a complete installation. For details, see Bridge Structures Girder Westbound, typical Details sheets.
   - Furnish and install (4) one-inch inner-ducts with TOS fiber optic cables in one inner-duct, into existing conduit shown on this drawing. Refer to riser diagram on sheets E-978 through E-981 and detail on E-973.
3. All conduits shown on this drawings are existing. Bold ones are to be used for pulling cable.

THIS PLAN ACCURATE FOR ELECTRICAL WORK ONLY.

SHEET NOTES:

(1) For details on racking TOS fiber inside manhole, see E-663A, Detail 3.

(2) Cross section reference for conduit configuration.

ALL DIMENSIONS ARE IN METERS UNLESS OTHERWISE SHOWN

REQUEST FOR INFORMATION NOT ADDRESSED IN THIS CCO REMAIN IN FORCE

MARK	DATE	DESCRIPTIONS	BY	CH'D	CCO#
		REVISIONS			
0	03/08/10	MEP INTEGRATION	SYC	FW	110

CONTRACT CHANGE ORDER NO._____
SHEET _____ OF _____

BRIDGE STRUCTURES GIRDER WESTBOUND
OAKLAND APPROACH STRUCTURES
UNDERGROUND

SCALE: 1:200

E-625

CALCULATED/ DESIGNED BY	SYC	DATE 01/10	REVISED BY
CHECKED BY	FW	01/10	DATE REVISED

DESIGN OVERSIGHT
BEHZAD GOLEMOHAMMADI

STATE OF CALIFORNIA - DEPARTMENT OF TRANSPORTATION
Caltrans

FOR REDUCED PLANS ORIGINAL SCALE IS IN MILLIMETERS 0 20 40 60 80

DGN FILE =>04-0120f1_E-625.dgn
USERNAME =>llorico

CU 04251

EA 0120F1

LAST REVISION 00-00-00
DATE PLOTTED => 06-MAY-2010
TIME PLOTTED => 18:04

DIST	COUNTY	ROUTE	KILOMETER POST TOTAL PROJECT	SHEET No	TOTAL SHEETS
04	SF,Ala	80	12.2/14.3 0.0/4.0	407a 06S27	1204

Syn Yee Chin 03/08/10
REGISTERED ELECTRICAL ENGINEER DATE

05-06-2010
PLANS APPROVAL DATE

REGISTERED PROFESSIONAL ENGINEER SYN YEE CHIN No. 18186 Exp. 09/30/2011 ELECTRICAL STATE OF CALIFORNIA

PB AMERICAS, Inc.
A Parsons Brinckerhoff Company
303 Second St., Suite 700N
San Francisco, CA 94107-1317

The State of California or its officers or agents shall not be responsible for the accuracy or completeness of electronic copies of this plan sheet.

Caltrans now has a web site! To get to the web site, go to http://www.dot.ca.gov

Caltrans Metric

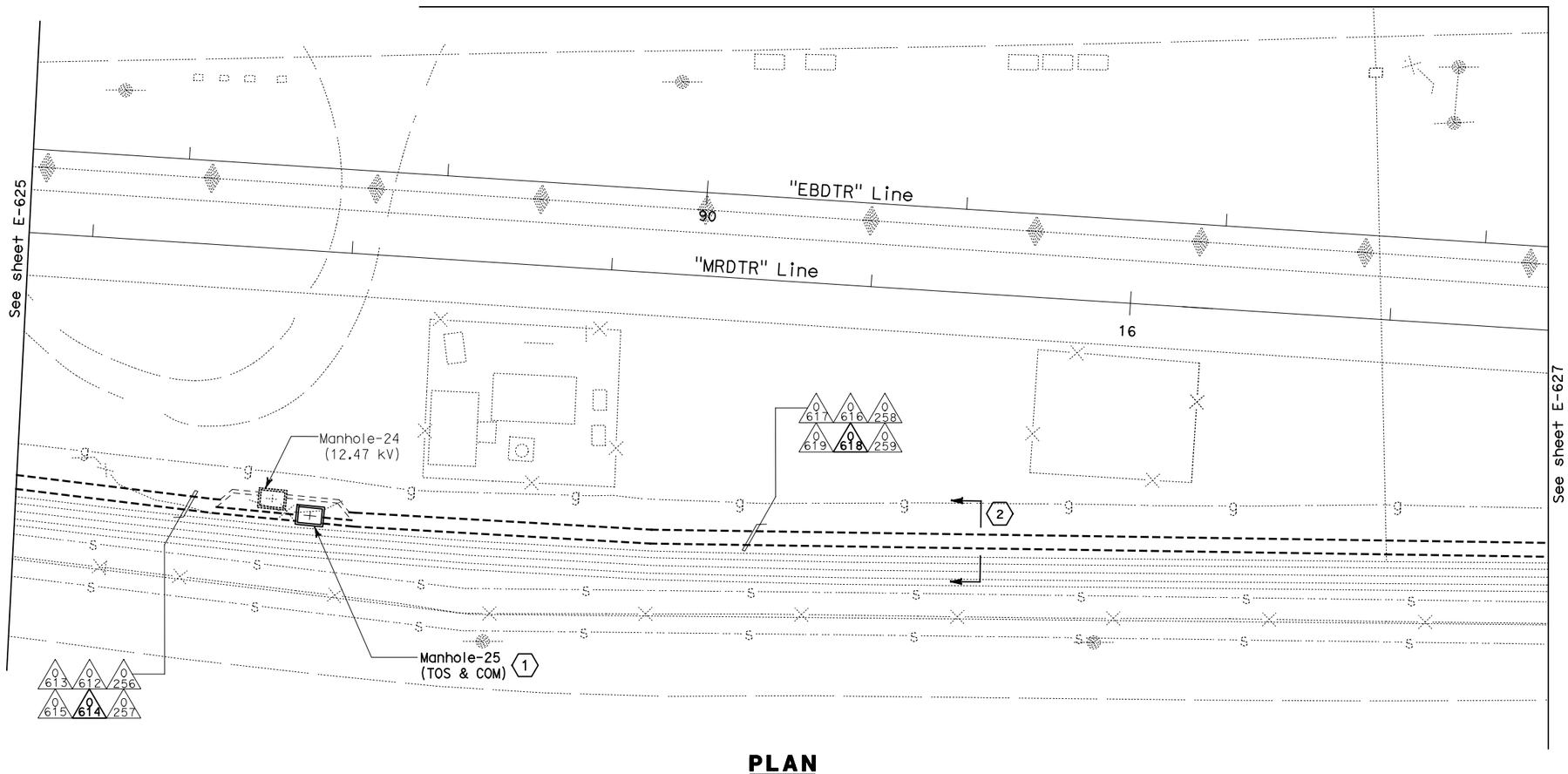

PLAN

NOTES:

1. This plan sheet is a record drawing from Oakland Touchdown 1 contract. The Contractor shall verify the existing installation. See sheet E-85 of Oakland Touchdown 1, contract No. 04-0120L4.
2. The installed components shall not be limited to the ones listed below, but shall be a complete installation. For details, see Bridge Structures Girder Westbound, typical Details sheets.
   - Furnish and install (4) one-inch inner-ducts with TOS fiber optic cables in one inner-duct, into existing conduit shown on this drawing. Refer to riser diagram on sheets E-978 through E-981 and detail on E-973.
3. All conduits shown on this drawing are existing. Bold ones to be used for pulling cable.

SHEET NOTES:

1. For details on racking TOS fiber inside manhole, see E-663A, Detail 3.
2. Cross section reference for conduit configuration.

THIS PLAN ACCURATE FOR ELECTRICAL WORK ONLY.

ALL DIMENSIONS ARE IN METERS UNLESS OTHERWISE SHOWN

REQUEST FOR INFORMATION NOT ADDRESSED IN THIS CCO REMAIN IN FORCE

MARK	DATE	DESCRIPTIONS	BY	CH'D	CCO#
0	03/08/10	MEP INTEGRATION	SYC	FW	110

REVISIONS

CONTRACT CHANGE ORDER NO._____
SHEET _____ OF _____

BRIDGE STRUCTURES GIRDER WESTBOUND
OAKLAND APPROACH STRUCTURES
UNDERGROUND

SCALE: 1:200

E-626

STATE OF CALIFORNIA - DEPARTMENT OF TRANSPORTATION
Caltrans

DESIGN OVERSIGHT: BEHZAD GOLEMOHAMMADI

CALCULATED/DESIGNED BY: SYC DATE 01/10 REVISED BY
CHECKED BY: FW 01/10 DATE REVISED

FOR REDUCED PLANS ORIGINAL SCALE IS IN MILLIMETERS 0 20 40 60 80

DGN FILE =>04-0120f1_E-626.dgn
USERNAME =>llorico

CU 04251 EA 0120F1

LAST REVISION 00-00-00
DATE PLOTTED => 06-MAY-2010
TIME PLOTTED => 18:04

DIST	COUNTY	ROUTE	KILOMETER POST TOTAL PROJECT	SHEET No	TOTAL SHEETS
04	SF, Ala	80	12.2/14.3 0.0/4.0	407a 06S28	1204

Syn Yee Chin 03/08/10
REGISTERED ELECTRICAL ENGINEER DATE

05-06-2010
PLANS APPROVAL DATE

REGISTERED PROFESSIONAL ENGINEER
SYN YEE CHIN
No. 18186
Exp. 09/30/2011
ELECTRICAL
STATE OF CALIFORNIA

PB AMERICAS, Inc.
A Parsons Brinckerhoff Company
303 Second St., Suite 700N
San Francisco, CA 94107-1317

The State of California or its officers or agents shall not be responsible for the accuracy or completeness of electronic copies of this plan sheet.

Caltrans now has a web site! To get to the web site, go to http://www.dot.ca.gov

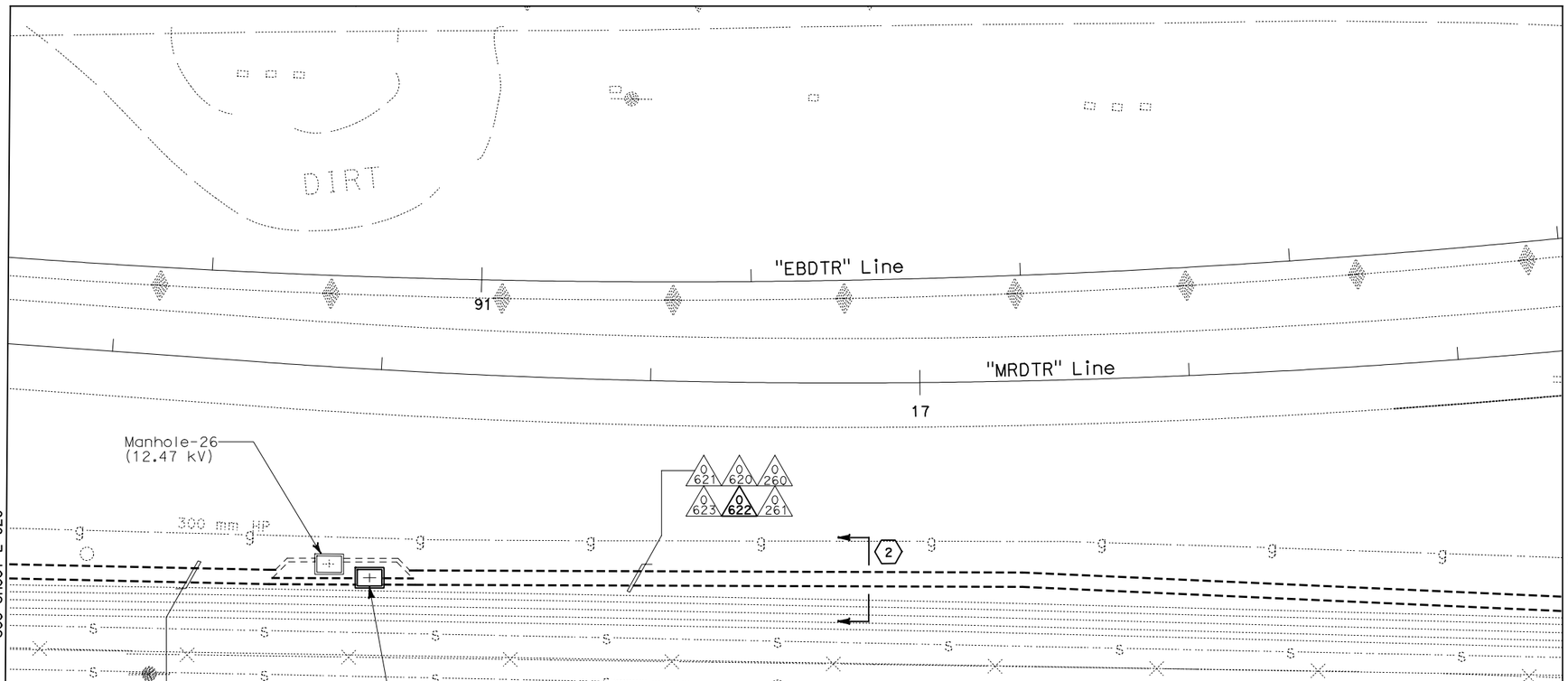

PLAN

NOTES:

1. This plan sheet is a record drawing from Oakland Touchdown 1 contract. The Contractor shall verify the existing installation. See sheet E-86 of Oakland Touchdown 1, contract No. 04-0120L4.
2. The installed components shall not be limited to the ones listed below, but shall be a complete installation. For details, see Bridge Structures Girder Westbound, typical Details sheets.
   - Furnish and install (4) one-inch inner-ducts with TOS fiber optic cables in one inner-duct, into existing conduit shown on this drawing. Refer to riser diagram on sheets E-978 through E-981 and detail on E-973.
3. All conduits shown on this drawing are existing. Bold ones are to be used for pulling cable.

SHEET NOTES:

1. For details on racking TOS fiber inside manhole, see E-663A, Detail 3.
2. Cross section reference for conduit configuration.

REQUEST FOR INFORMATION NOT ADDRESSED IN THIS CCO REMAIN IN FORCE

MARK	DATE	REVISIONS DESCRIPTIONS	BY	CH'D	CCO#
0	03/08/10	MEP INTEGRATION	SYC	FW	110

CONTRACT CHANGE ORDER NO._____
SHEET _____ OF _____

BRIDGE STRUCTURES GIRDER WESTBOUND
OAKLAND APPROACH STRUCTURES
UNDERGROUND

SCALE: 1:200

E-627

CALCULATED/ DESIGNED BY	CHECKED BY
SYC	FW
DATE 01/10	01/10
REVISED BY	DATE REVISED

DESIGN OVERSIGHT
BEHZAD GOLEMOHAMMADI

STATE OF CALIFORNIA - DEPARTMENT OF TRANSPORTATION
Caltrans

THIS PLAN ACCURATE FOR ELECTRICAL WORK ONLY.

ALL DIMENSIONS ARE IN METERS UNLESS OTHERWISE SHOWN

FOR REDUCED PLANS ORIGINAL SCALE IS IN MILLIMETERS 0 20 40 60 80

DGN FILE =>04-0120f1_E-627.dgn
USERNAME =>llorico

CU 04251

EA 0120F1

DATE PLOTTED => 06-MAY-2010
TIME PLOTTED => 18:04

LAST REVISION 00-00-00

DIST	COUNTY	ROUTE	KILOMETER POST TOTAL PROJECT	SHEET No	TOTAL SHEETS
04	SF, Ala	80	12.2/14.3 0.0/4.0	407a 06S29	1204

Syn Yee Chin 03/08/10
REGISTERED ELECTRICAL ENGINEER DATE

05-06-2010
PLANS APPROVAL DATE

REGISTERED PROFESSIONAL ENGINEER
SYN YEE CHIN
No. 18186
Exp. 09/30/2011
ELECTRICAL
STATE OF CALIFORNIA

PB AMERICAS, Inc.
A Parsons Brinckerhoff Company
303 Second St., Suite 700N
San Francisco, CA 94107-1317

The State of California or its officers or agents shall not be responsible for the accuracy or completeness of electronic copies of this plan sheet.

Caltrans now has a web site! To get to the web site, go to http://www.dot.ca.gov

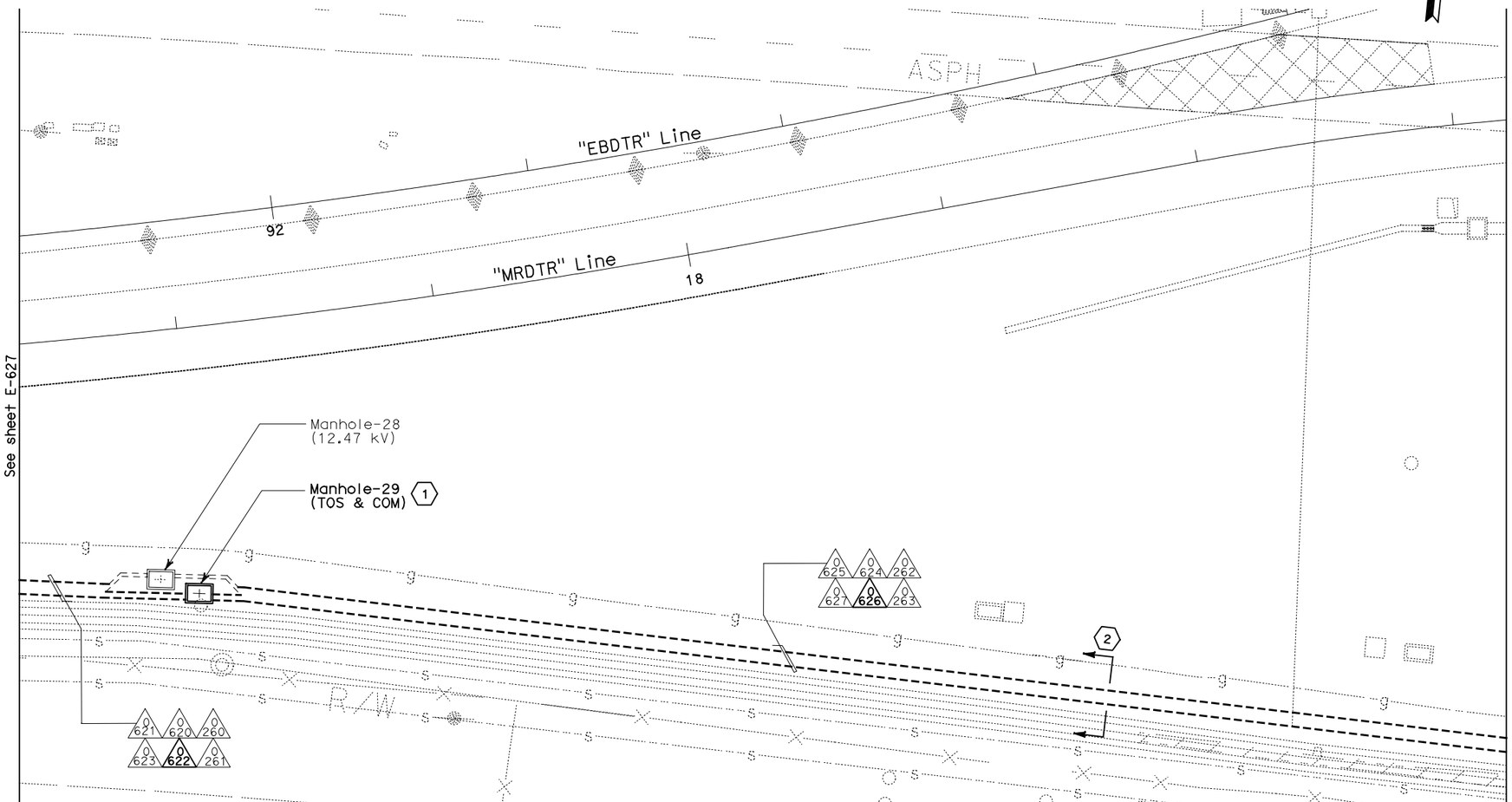

PLAN

NOTES:

1. This plan sheet is a record drawing from Oakland Touchdown 1 contract. The Contractor shall verify the existing installation. See sheet E-87 of Oakland Touchdown 1, contract No. 04-0120L4.
2. The installed components shall not be limited to the ones listed below, but shall be a complete installation. For details, see Bridge Structures Girder Westbound, typical Details sheets.
   - Furnish and install (4) one-inch inner-ducts with TOS fiber optic cables in one inner-duct, into existing conduit shown on this drawing. Refer to riser diagram on sheets E-978 through E-981 and detail on E-973.
3. All conduits shown on this drawings are existing. Bold ones are to be used for pulling cable.

SHEET NOTES:

(1) For details on racking TOS fiber inside manhole, see E-663A, Detail 3.

(2) Cross section reference for conduit configuration.

REQUEST FOR INFORMATION NOT ADDRESSED IN THIS CCO REMAIN IN FORCE					
0	03/08/10	MEP INTEGRATION	SYC	FW	110
MARK	DATE	DESCRIPTIONS	BY	CH'D	CCO#
REVISIONS					

CONTRACT CHANGE ORDER NO._____
SHEET _____ OF _____

BRIDGE STRUCTURES GIRDER WESTBOUND
OAKLAND APPROACH STRUCTURES
UNDERGROUND

SCALE: 1:200

E-628

THIS PLAN ACCURATE FOR ELECTRICAL WORK ONLY.

ALL DIMENSIONS ARE IN METERS UNLESS OTHERWISE SHOWN

FOR REDUCED PLANS ORIGINAL SCALE IS IN MILLIMETERS 0 20 40 60 80

DGN FILE =>04-0120f1_E-628.dgn
USERNAME =>llorico

CU 04251

EA 0120F1

DATE PLOTTED => 06-MAY-2010
TIME PLOTTED => 18:05

LAST REVISION 00-00-00

STATE OF CALIFORNIA - DEPARTMENT OF TRANSPORTATION
Caltrans

DESIGN OVERSIGHT
BEHZAD GOLEMOHAMMADI

CALCULATED/ DESIGNED BY	SYC	DATE 01/10	REVISED BY
CHECKED BY	FW	01/10	DATE REVISED

DIST	COUNTY	ROUTE	KILOMETER POST TOTAL PROJECT	SHEET No	TOTAL SHEETS
04	SF, Ala	80	12.2/14.3 0.0/4.0	407a 06S30	1204

Syn Yee Chin 03/08/10
REGISTERED ELECTRICAL ENGINEER DATE

05-06-2010
PLANS APPROVAL DATE

REGISTERED PROFESSIONAL ENGINEER
SYN YEE CHIN
No. 18186
Exp. 09/30/2011
ELECTRICAL
STATE OF CALIFORNIA

PB AMERICAS, Inc.
A Parsons Brinckerhoff Company
303 Second St., Suite 700N
San Francisco, CA 94107-1317

The State of California or its officers or agents shall not be responsible for the accuracy or completeness of electronic copies of this plan sheet.

Caltrans now has a web site! To get to the web site, go to http://www.dot.ca.gov

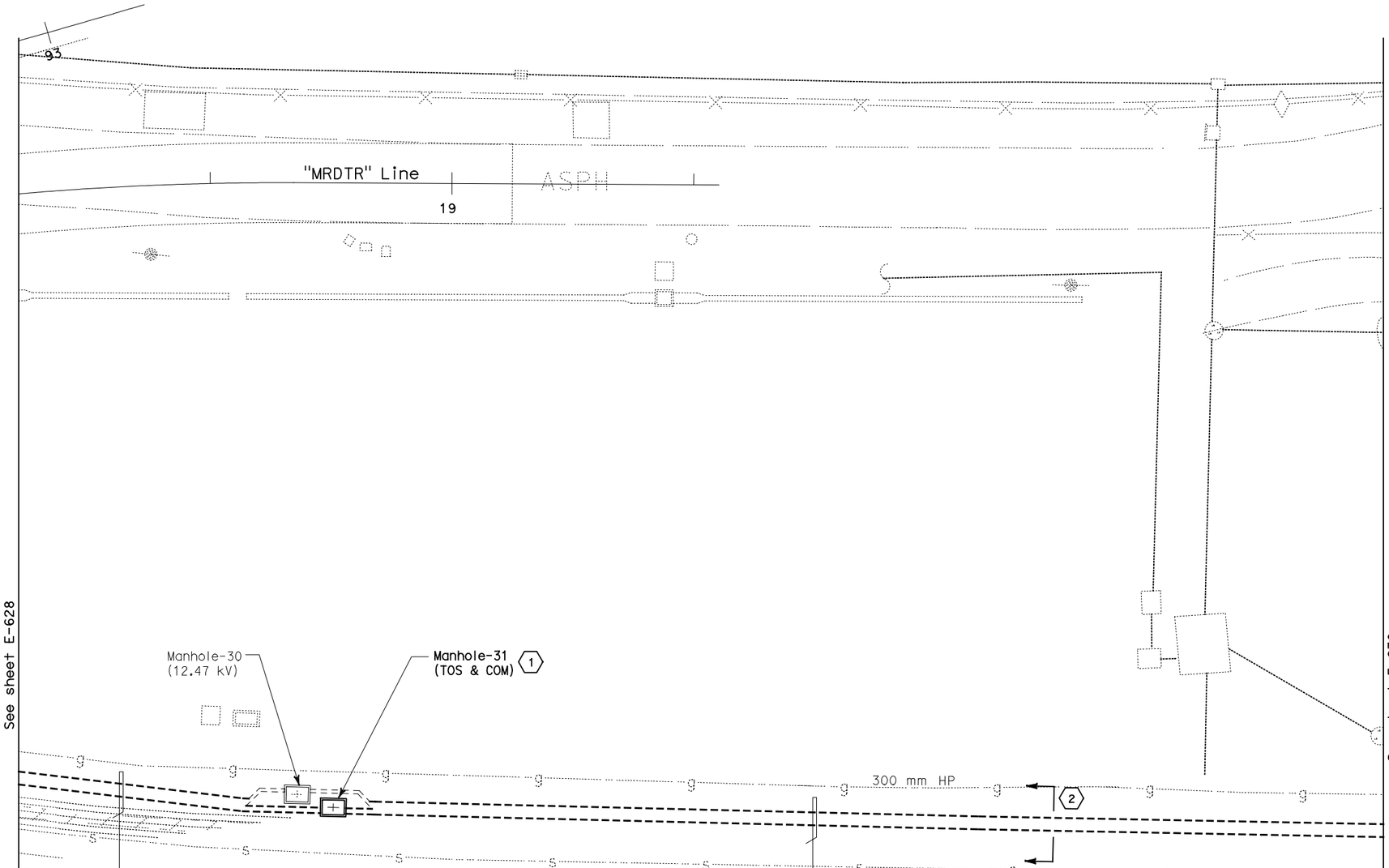

PLAN

NOTES:

1. This plan sheet is a record drawing from Oakland Touchdown 1 contract. The Contractor shall verify the existing installation. See sheet E-88 of Oakland Touchdown 1, contract No. 04-0120L4.
2. The installed components shall not be limited to the ones listed below, but shall be a complete installation. For details, see Bridge Structures Girder Westbound, typical Details sheets.
   - Furnish and install (4) one-inch inner-ducts with TOS fiber optic cables in one inner-duct, into existing conduit shown on this drawing. Refer to riser diagram on sheets E-978 through E-981 and detail on E-973.
3. All conduits shown on this drawing are existing. Bold ones are to be used for pulling cable.

SHEET NOTES:

1. For details on racking TOS fiber inside manhole, see E-663A, Detail 3.
2. Cross section reference for conduit configuration.

REQUEST FOR INFORMATION NOT ADDRESSED IN THIS CCO REMAIN IN FORCE

MARK	DATE	DESCRIPTIONS	BY	CH'D	CCO#
		REVISIONS			
0	03/08/10	MEP INTEGRATION	SYC	FW	110

CONTRACT CHANGE ORDER NO._____
SHEET _____ OF _____

BRIDGE STRUCTURES GIRDER WESTBOUND
OAKLAND APPROACH STRUCTURES
UNDERGROUND

SCALE: 1:200

E-629

CALCULATED/ DESIGNED BY	CHECKED BY	SYC	DATE 01/10	REVISED BY	DATE REVISED
		FW	01/10		

DESIGN OVERSIGHT
BEHZAD GOLEMOHAMMADI

STATE OF CALIFORNIA - DEPARTMENT OF TRANSPORTATION
Caltrans

DATE PLOTTED => 06-MAY-2010
TIME PLOTTED => 16:05
LAST REVISION 00-00-00

THIS PLAN ACCURATE FOR ELECTRICAL WORK ONLY.

ALL DIMENSIONS ARE IN METERS UNLESS OTHERWISE SHOWN

FOR REDUCED PLANS ORIGINAL SCALE IS IN MILLIMETERS 0 20 40 60 80

DGN FILE =>04-0120f1_E-629.dgn
USERNAME =>llorico

CU 04251

EA 0120F1

DIST	COUNTY	ROUTE	KILOMETER POST TOTAL PROJECT	SHEET No	TOTAL SHEETS
04	SF,Ala	80	12.2/14.3 0.0/4.0	407a 06S31	1204

Caltrans Metric

Syn Yee Chin 03/08/10
REGISTERED ELECTRICAL ENGINEER DATE

05-06-2010
PLANS APPROVAL DATE

REGISTERED PROFESSIONAL ENGINEER SYN YEE CHIN No. 18186 Exp. 09/30/2011 ELECTRICAL STATE OF CALIFORNIA

PB AMERICAS, Inc.
A Parsons Brinckerhoff Company
303 Second St., Suite 700N
San Francisco, CA 94107-1317

The State of California or its officers or agents shall not be responsible for the accuracy or completeness of electronic copies of this plan sheet.

Caltrans now has a web site! To get to the web site, go to http://www.dot.ca.gov

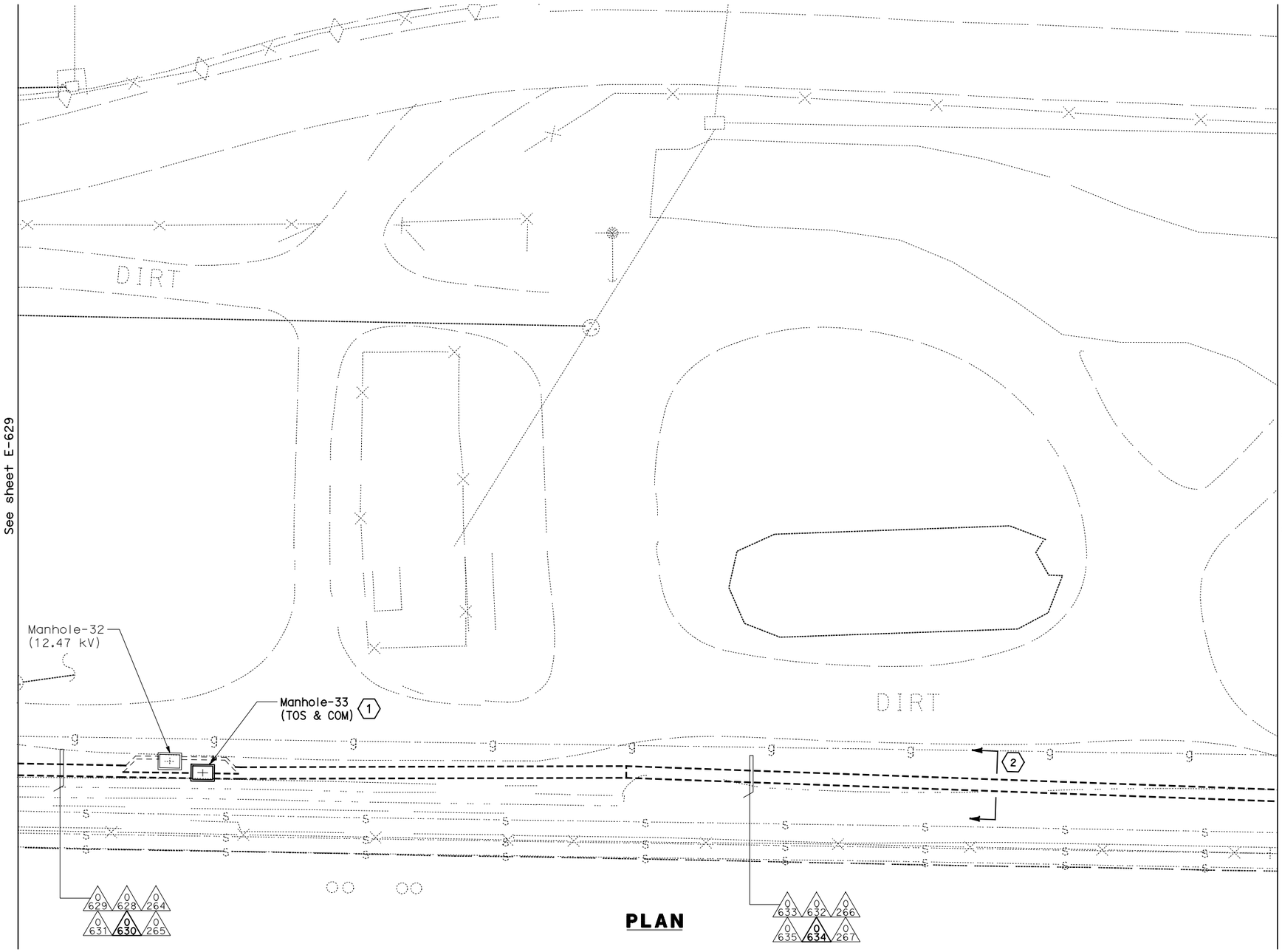

PLAN

NOTES:

1. This plan sheet is a record drawing from Oakland Touchdown 1 contract. The Contractor shall verify the existing installation. See sheet E-89 of Oakland Touchdown 1, contract No. 04-0120L4.
2. The installed components shall not be limited to the ones listed below, but shall be a complete installation. For details, see Bridge Structures Girder Westbound, typical Details sheets.
   - Furnish and install (4) one-inch inner-ducts with TOS fiber optic cables in one inner-duct, into existing conduit shown on this drawing. Refer to riser diagram on sheets E-978 through E-981 and detail on E-973.
3. All conduits shown on this drawing are existing. Bold ones are to be used for pulling cable.

SHEET NOTES:

1. For details on racking TOS fiber inside manhole, see E-663A, Detail 3.
2. Cross section reference for conduit configuration.

REQUEST FOR INFORMATION NOT ADDRESSED IN THIS CCO REMAIN IN FORCE					
0	03/08/10	MEP INTEGRATION	SYC	FW	110
MARK	DATE	DESCRIPTIONS	BY	CH'D	CCO#
REVISIONS					

CONTRACT CHANGE ORDER NO._____
SHEET_____ OF _____

BRIDGE STRUCTURES GIRDER WESTBOUND
OAKLAND APPROACH STRUCTURES UNDERGROUND
SCALE: 1:200

E-630

THIS PLAN ACCURATE FOR ELECTRICAL WORK ONLY.

ALL DIMENSIONS ARE IN METERS UNLESS OTHERWISE SHOWN

STATE OF CALIFORNIA - DEPARTMENT OF TRANSPORTATION
Caltrans

DESIGN OVERSIGHT: BEHZAD GOLEMOHAMMADI
CALCULATED/DESIGNED BY: SYC DATE 01/10
CHECKED BY: FW 01/10
REVISED BY
DATE REVISED

FOR REDUCED PLANS ORIGINAL SCALE IS IN MILLIMETERS 0 20 40 60 80

DGN FILE =>04-0120f1_E-630.dgn
USERNAME =>llorico

CU 04251

EA 0120F1

LAST REVISION 00-00-00
DATE PLOTTED => 06-MAY-2010
TIME PLOTTED => 16:05

DIST	COUNTY	ROUTE	KILOMETER POST TOTAL PROJECT	SHEET No	TOTAL SHEETS
04	SF, Ala	80	12.2/14.3 0.0/4.0	407a 06S32	1204

Syn Yee Chin 03/08/10
REGISTERED ELECTRICAL ENGINEER DATE

05-06-2010
PLANS APPROVAL DATE

REGISTERED PROFESSIONAL ENGINEER
SYN YEE CHIN
No. 18186
Exp. 09/30/2011
ELECTRICAL
STATE OF CALIFORNIA

PB AMERICAS, Inc.
A Parsons Brinckerhoff Company
303 Second St., Suite 700N
San Francisco, CA 94107-1317

The State of California or its officers or agents shall not be responsible for the accuracy or completeness of electronic copies of this plan sheet.

Caltrans now has a web site! To get to the web site, go to http://www.dot.ca.gov

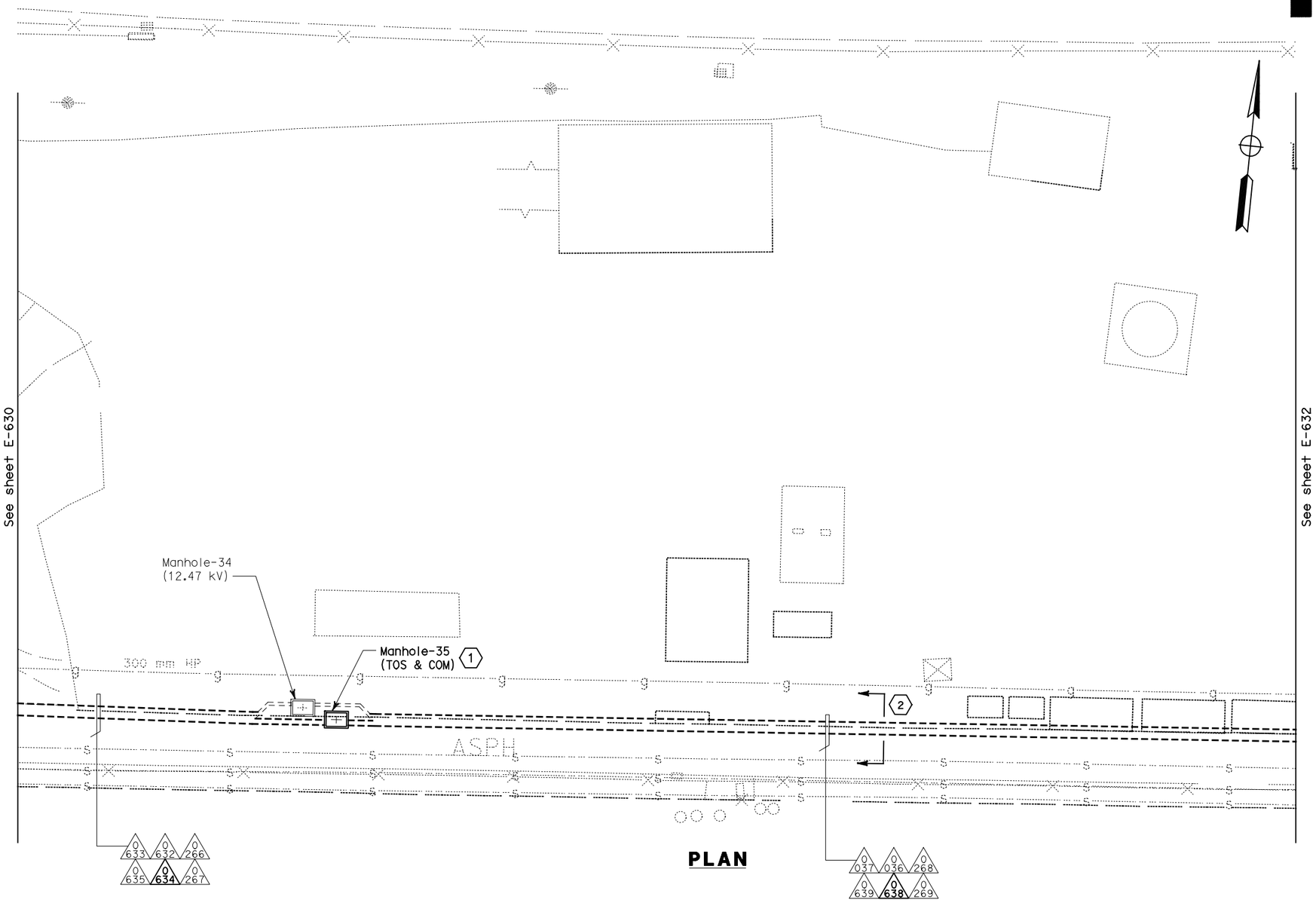

PLAN

NOTES:

1. This plan sheet is a record drawing from Oakland Touchdown 1 contract. The Contractor shall verify the existing installation. See sheet E-90 of Oakland Touchdown 1, contract No. 04-0120L4.
2. The installed components shall not be limited to the ones listed below, but shall be a complete installation. For details, see Bridge Structures Girder Westbound, typical Details sheets.
   - Furnish and install (4) one-inch inner-ducts with TOS fiber optic cables in one inner-duct, into existing conduit shown on this drawing. Refer to riser diagram on sheets E-978 through E-981 and detail on E-973.
3. All conduits shown on this drawing are existing. Bold ones are to be used for pulling cable.

SHEET NOTES:

(1) For details on racking TOS fiber inside manhole, see E-663A, Detail 3.

(2) Cross section reference for conduit configuration.

REQUEST FOR INFORMATION NOT ADDRESSED IN THIS CCO REMAIN IN FORCE					
0	03/08/10	MEP INTEGRATION	SYC	FW	110
MARK	DATE	DESCRIPTIONS	BY	CH'D	CCO#
REVISIONS					

CONTRACT CHANGE ORDER NO._____
SHEET _____ OF _____

BRIDGE STRUCTURES GIRDER WESTBOUND
OAKLAND APPROACH STRUCTURES
UNDERGROUND

SCALE: 1:200

E-631

THIS PLAN ACCURATE FOR ELECTRICAL WORK ONLY.

ALL DIMENSIONS ARE IN METERS UNLESS OTHERWISE SHOWN

FOR REDUCED PLANS ORIGINAL SCALE IS IN MILLIMETERS 0 20 40 60 80

DGN FILE =>04-0120f1_E-631.dgn
USERNAME =>llorico

CU 04251

EA 0120F1

DESIGN OVERSIGHT
BEHZAD GOLEMOHAMMADI

STATE OF CALIFORNIA - DEPARTMENT OF TRANSPORTATION
Caltrans

	CALCULATED/ DESIGNED BY	CHECKED BY
SYC	FW	
DATE 01/10	01/10	
REVISED BY	DATE REVISED	

LAST REVISION 00-00-00
DATE PLOTTED => 06-MAY-2010
TIME PLOTTED => 16:05

DIST	COUNTY	ROUTE	KILOMETER POST TOTAL PROJECT	SHEET No	TOTAL SHEETS
04	SF, Ala	80	12.2/14.3 0.0/4.0	407a 06S33	1204

Syn Yee Chin 03/08/10
REGISTERED ELECTRICAL ENGINEER DATE

SYN YEE CHIN
No. 18186
Exp. 09/30/2011
ELECTRICAL
REGISTERED PROFESSIONAL ENGINEER
STATE OF CALIFORNIA

05-06-2010
PLANS APPROVAL DATE

PB AMERICAS, Inc.
A Parsons Brinckerhoff Company
303 Second St., Suite 700N
San Francisco, CA 94107-1317

The State of California or its officers or agents shall not be responsible for the accuracy or completeness of electronic copies of this plan sheet.

Caltrans now has a web site! To get to the web site, go to http://www.dot.ca.gov

Caltrans Metric

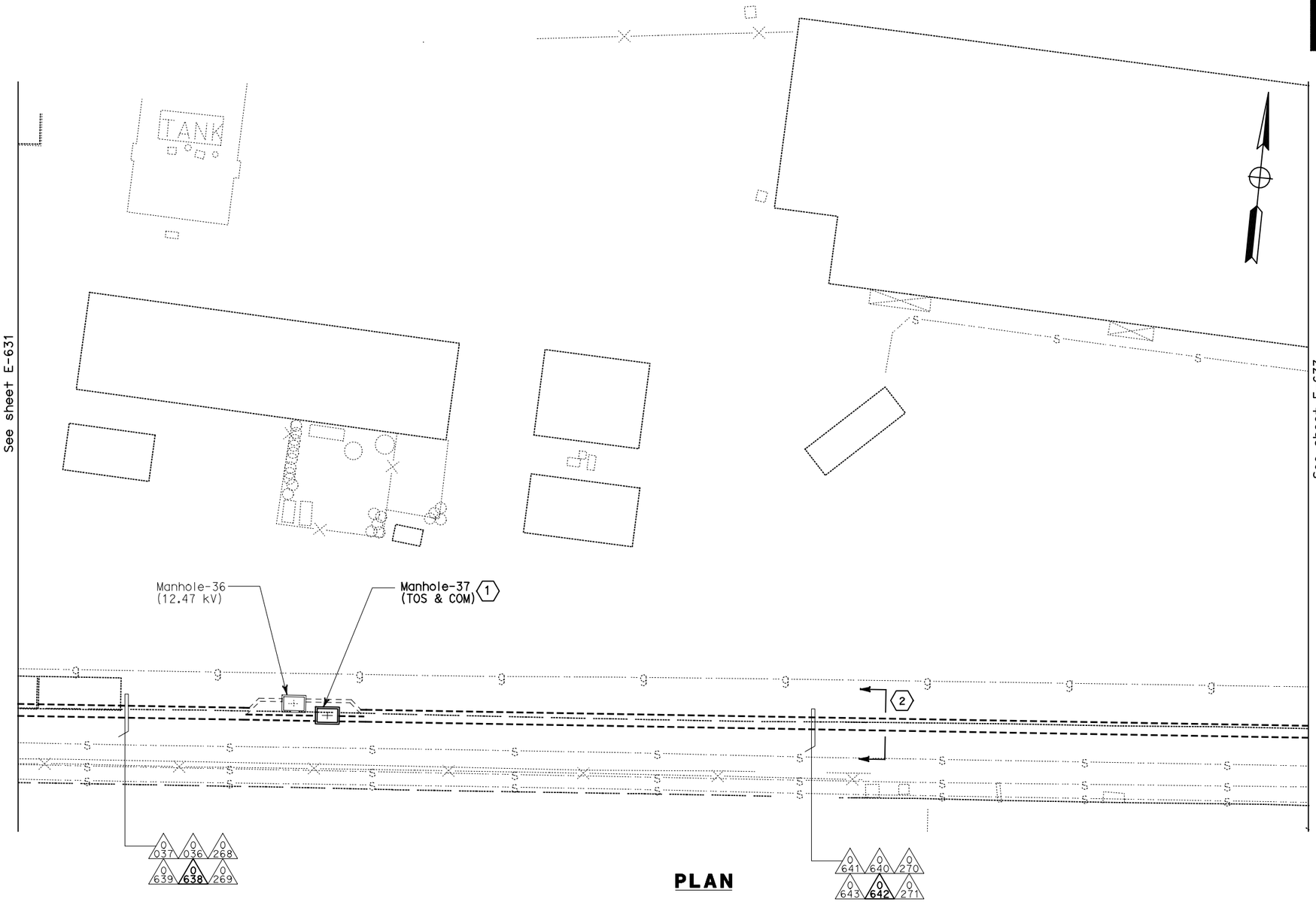

PLAN

NOTES:

1. This plan sheet is a record drawing from Oakland Touchdown 1 contract. The Contractor shall verify the existing installation. See sheet E-91 of Oakland Touchdown 1, contract No. 04-0120L4.
2. The installed components shall not be limited to the ones listed below, but shall be a complete installation. For details, see Bridge Structures Girder Westbound, typical Details sheets,
   - Furnish and install (4) one-inch inner-ducts with TOS fiber optic cables in one inner-duct, into existing conduit shown on this drawing. Refer to riser diagram on sheets E-978 through E-981 and detail on E-973.
3. All conduits shown on this drawing are existing. Bold ones are to be used for pulling cable.

SHEET NOTES:

(1) For details on racking TOS fiber inside manhole, see E-663A, Detail 3.

(2) Cross section reference for conduit configuration.

REQUEST FOR INFORMATION NOT ADDRESSED IN THIS CCO REMAIN IN FORCE						
MARK	DATE	REVISIONS DESCRIPTIONS	BY	CH'D	CCO#	
0	03/08/10	MEP INTEGRATION	SYC	FW	110	

CONTRACT CHANGE ORDER NO._____
SHEET _____ OF _____

BRIDGE STRUCTURES GIRDER WESTBOUND
OAKLAND APPROACH STRUCTURES
UNDERGROUND

SCALE: 1:200

E-632

THIS PLAN ACCURATE FOR ELECTRICAL WORK ONLY.

ALL DIMENSIONS ARE IN METERS UNLESS OTHERWISE SHOWN

FOR REDUCED PLANS ORIGINAL SCALE IS IN MILLIMETERS 0 20 40 60 80

DGN FILE =>04-0120f1_E-632.dgn
USERNAME =>llorico

CU 04251

EA 0120F1

LAST REVISION 00-00-00
DATE PLOTTED => 06-MAY-2010
TIME PLOTTED => 16:05

STATE OF CALIFORNIA - DEPARTMENT OF TRANSPORTATION
Caltrans

DESIGN OVERSIGHT
BEHZAD GOLEMOHAMMADI

CALCULATED/ DESIGNED BY
CHECKED BY

DATE	REVISED BY
01/10	DATE REVISED
SYC	
FW	

DIST	COUNTY	ROUTE	KILOMETER POST TOTAL PROJECT	SHEET No	TOTAL SHEETS
04	SF, Ala	80	12.2/14.3 0.0/4.0	407a 06S34	1204

Syn Yee Chin 03/08/10
REGISTERED ELECTRICAL ENGINEER DATE

05-06-2010
PLANS APPROVAL DATE

REGISTERED PROFESSIONAL ENGINEER
SYN YEE CHIN
No. 18186
Exp. 09/30/2011
ELECTRICAL
STATE OF CALIFORNIA

PB AMERICAS, Inc.
A Parsons Brinckerhoff Company
303 Second St., Suite 700N
San Francisco, CA 94107-1317

The State of California or its officers or agents shall not be responsible for the accuracy or completeness of electronic copies of this plan sheet.

Caltrans now has a web site! To get to the web site, go to http://www.dot.ca.gov

Caltrans Metric

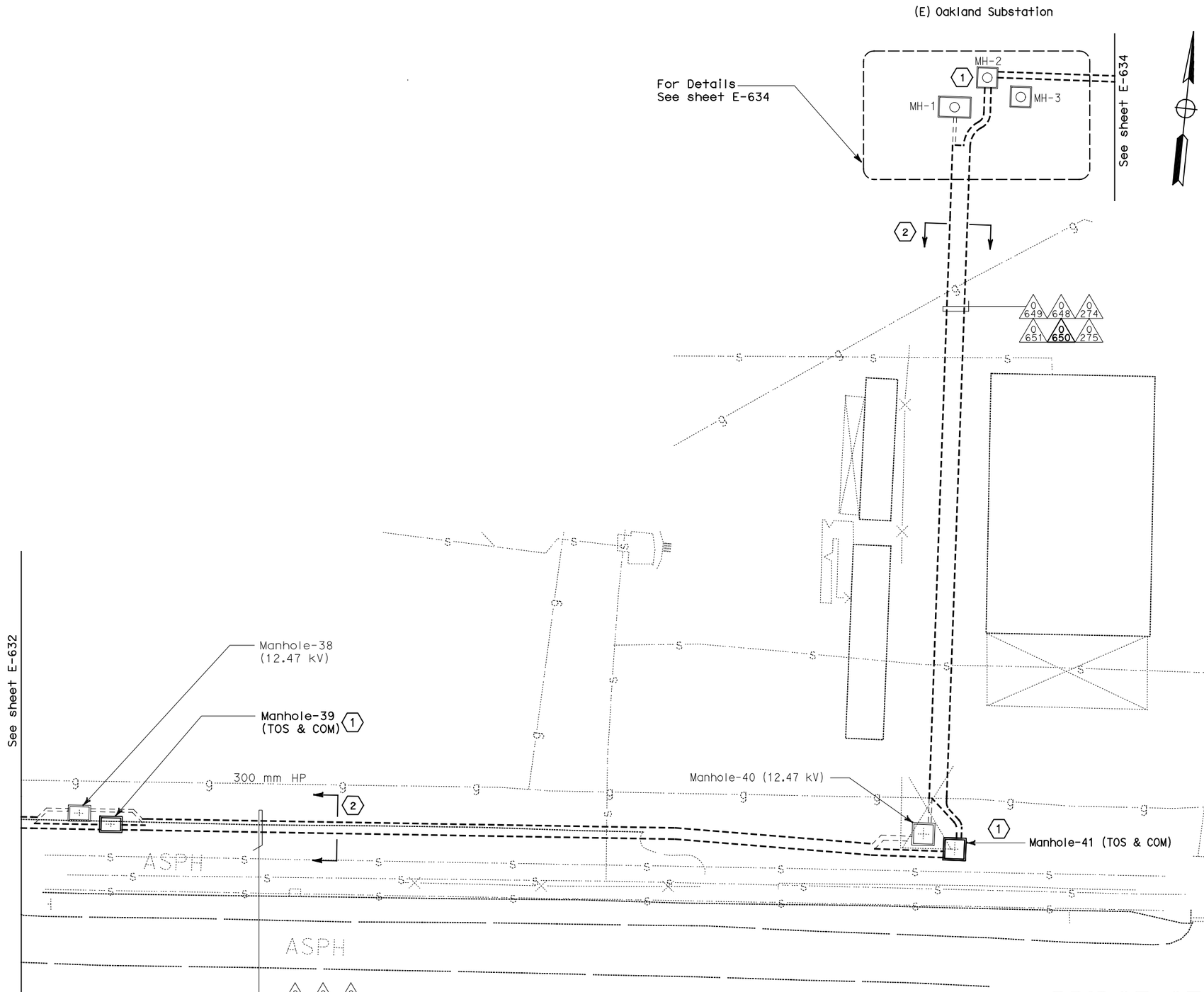

PLAN

NOTES:

1. This plan sheet is a record drawing from Oakland Touchdown 1 contract. The Contractor shall verify the existing installation. See sheet E-92 of Oakland Touchdown 1, contract No. 04-0120L4.
2. The installed components shall not be limited to the ones listed below, but shall be a complete installation. For details, see Bridge Structures Girder Westbound, typical Details sheets.
   - Furnish and install (4) one-inch inner-ducts with TOS fiber optic cables in one inner-duct, into existing conduit shown on this drawing. Refer to riser diagram on sheets E-978 through E-981 and detail on E-973.
3. All conduits shown on this drawing are existing. Bold ones are to be used for pulling cable.

SHEET NOTES:

(1) For details on racking TOS fiber inside manhole, see E-663A, Detail 3.

(2) Cross section reference for conduit configuration.

REQUEST FOR INFORMATION NOT ADDRESSED IN THIS CCO REMAIN IN FORCE

MARK	DATE	REVISIONS DESCRIPTIONS	BY	CH'D	CCO#
0	03/08/10	MEP INTEGRATION	SYC	FW	110

CONTRACT CHANGE ORDER NO. _____
SHEET _____ OF _____

BRIDGE STRUCTURES GIRDER WESTBOUND
OAKLAND APPROACH STRUCTURES
UNDERGROUND

SCALE: 1:200

E-633

DESIGN OVERSIGHT	CALCULATED/ DESIGNED BY	DATE	REVISED BY
BEHZAD GOLEMOHAMMADI	CHECKED BY	SYC 03/10	FW 01/10

STATE OF CALIFORNIA - DEPARTMENT OF TRANSPORTATION
Caltrans

THIS PLAN ACCURATE FOR ELECTRICAL WORK ONLY.

ALL DIMENSIONS ARE IN METERS UNLESS OTHERWISE SHOWN

FOR REDUCED PLANS ORIGINAL SCALE IS IN MILLIMETERS 0 20 40 60 80

DGN FILE =>04-0120f1_E-633.dgn
USERNAME =>llorico

CU 04251

EA 0120F1

LAST REVISION 00-00-00
DATE PLOTTED => 06-MAY-2010
TIME PLOTTED => 18:05

NOTES:

1. This plan sheet is a record drawing from Oakland Substation contract. The Contractor shall verify the existing installation. See sheet E-35 of Oakland Substation, contract No. 04-014034.

2. The installed components shall not be limited to the ones listed below, but shall be a complete installation. For details, see Bridge Structures Girder Westbound, typical Details sheets.
   - Furnish and install (4) one-inch inner-ducts with TOS fiber optic cables in one inner-duct, into existing conduit shown on this drawing. Refer to riser diagram on sheets E-978 through E-981 and detail on E-973.

3. All conduits shown on this drawing are existing. Bold ones are to be used for pulling cable.

SHEET NOTES:

(1) For details on racking TOS fiber inside manhole, see E-663A, Detail 3.

(2) Cross section reference for conduit configuration.

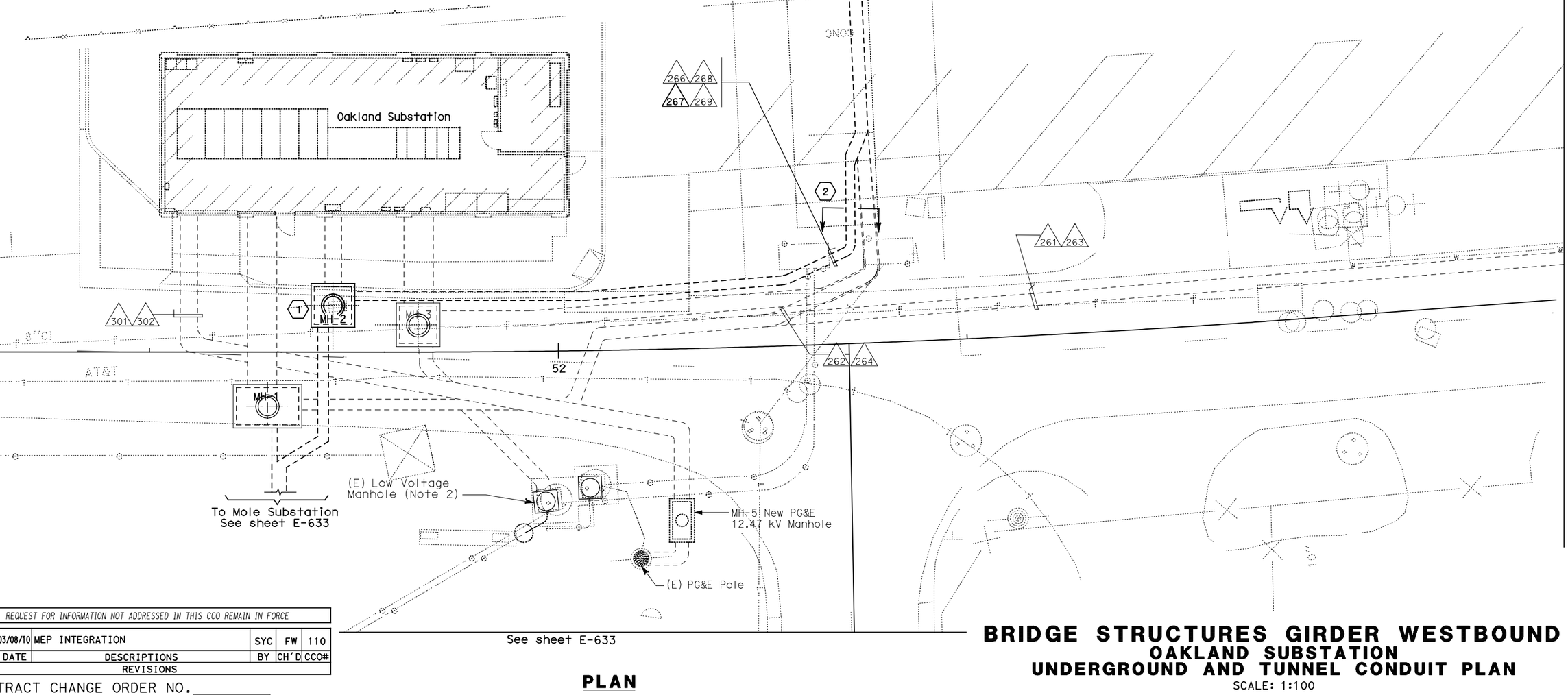

DIST	COUNTY	ROUTE	KILOMETER POST TOTAL PROJECT	SHEET No	TOTAL SHEETS
04	SF, Ala	80	12.2/14.3 0.0/4.0	407a 06S35	1204

Syn Yee Chin 03/08/10
REGISTERED ELECTRICAL ENGINEER DATE

05-06-2010
PLANS APPROVAL DATE

REGISTERED PROFESSIONAL ENGINEER
SYN YEE CHIN
No. 18186
Exp. 09/30/2011
ELECTRICAL
STATE OF CALIFORNIA

PB AMERICAS, Inc.
A Parsons Brinckerhoff Company
303 Second St., Suite 700N
San Francisco, CA 94107-1317

The State of California or its officers or agents shall not be responsible for the accuracy or completeness of electronic copies of this plan sheet.

Caltrans now has a web site! To get to the web site, go to http://www.dot.ca.gov

MARK	DATE	REVISIONS	BY	CH'D	CCO#
0	03/08/10	MEP INTEGRATION	SYC	FW	110

REQUEST FOR INFORMATION NOT ADDRESSED IN THIS CCO REMAIN IN FORCE

CONTRACT CHANGE ORDER NO._____
SHEET _____ OF _____

THIS PLAN ACCURATE FOR ELECTRICAL WORK ONLY.

ALL DIMENSIONS ARE IN METERS UNLESS OTHERWISE SHOWN

PLAN

BRIDGE STRUCTURES GIRDER WESTBOUND
OAKLAND SUBSTATION
UNDERGROUND AND TUNNEL CONDUIT PLAN

SCALE: 1:100

E-634

DESIGN OVERSIGHT	CALCULATED/ DESIGNED BY	DATE	REVISED BY	DATE REVISED
BEHZAD GOLEMOHAMMADI	CHECKED BY	SYC	0/10	FW	0/10

STATE OF CALIFORNIA - DEPARTMENT OF TRANSPORTATION
Caltrans

FOR REDUCED PLANS ORIGINAL SCALE IS IN MILLIMETERS 0 20 40 60 80

DGN FILE =>04-0120f1_E-634.dgn
USERNAME =>llorico

CU 04251

EA 0120F1

LAST REVISION 00-00-00
DATE PLOTTED => 06-MAY-2010
TIME PLOTTED => 18:05

DIST	COUNTY	ROUTE	KILOMETER POST TOTAL PROJECT	SHEET No	TOTAL SHEETS
04	SF,Ala	80	12.2/14.3 0.0/4.0	407a 06S36	1204

Syn Yee Chin 03/08/10
REGISTERED ELECTRICAL ENGINEER DATE

05-06-2010
PLANS APPROVAL DATE

REGISTERED PROFESSIONAL ENGINEER SYN YEE CHIN No. 18186 Exp. 09/30/2011 ELECTRICAL STATE OF CALIFORNIA

PB AMERICAS, Inc.
A Parsons Brinckerhoff Company
303 Second St., Suite 700N
San Francisco, CA 94107-1317

The State of California or its officers or agents shall not be responsible for the accuracy or completeness of electronic copies of this plan sheet.

Caltrans now has a web site! To get to the web site, go to http://www.dot.ca.gov

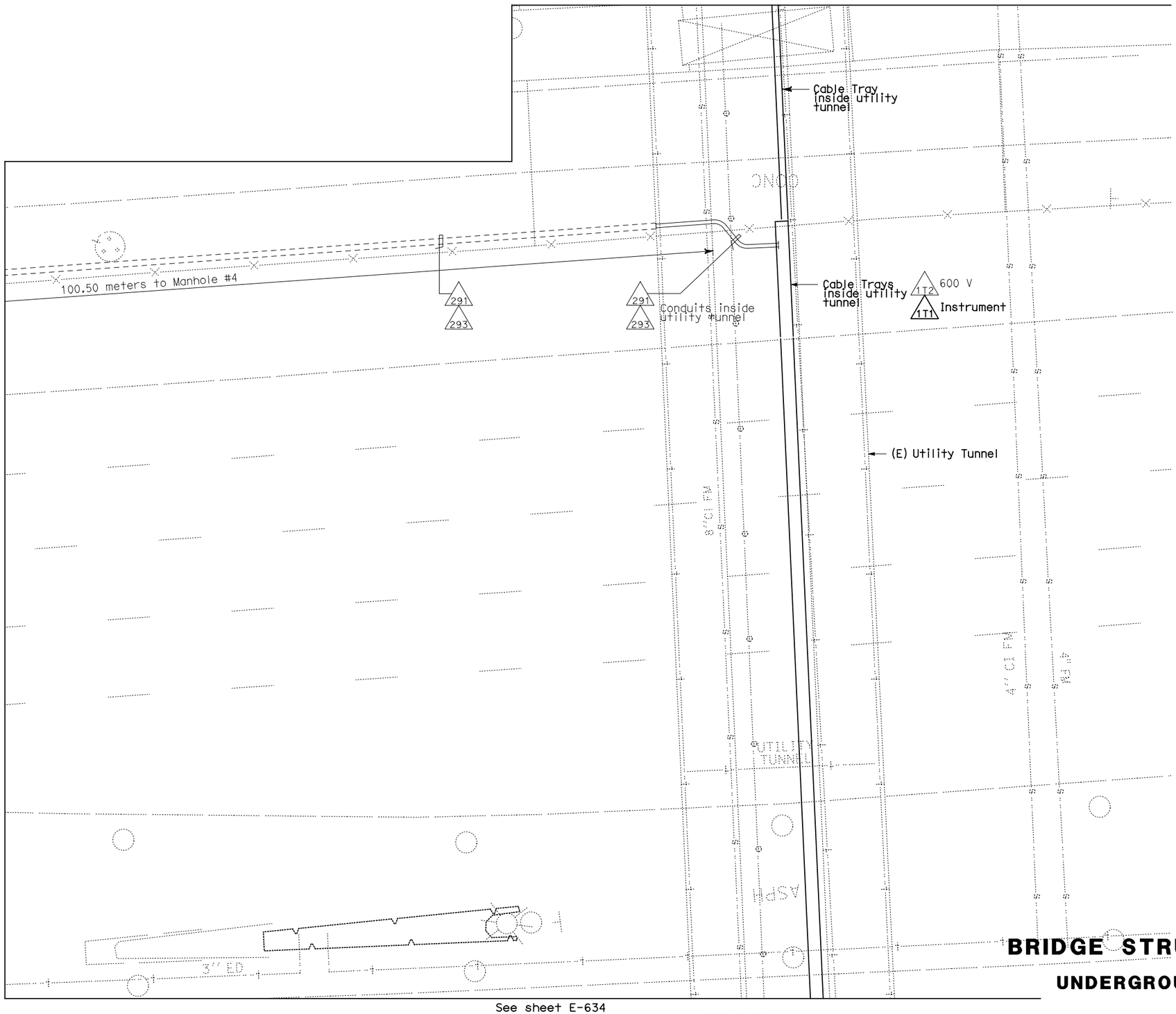

PLAN

NOTES:

1. This plan sheet is a record drawing from Oakland Substation contract. The Contractor shall verify the existing installation. See sheet E-34 of Oakland Substation, contract No. 04-014034.
2. The installed components shall not be limited to the ones listed below, but shall be a complete installation. For details, see Bridge Structures Girder Westbound, typical Details sheets.
   - Furnish and install TOS fiber optic cables into existing cable tray shown on this drawing. Refer to riser diagram on sheets E-978 through E-981.
3. All cable trays and conduits shown on this drawing are existing. Bold ones are to be used for pulling cable.

REQUEST FOR INFORMATION NOT ADDRESSED IN THIS CCO REMAIN IN FORCE

MARK	DATE	DESCRIPTIONS	BY	CH'D	CCO#
0	03/08/10	MEP INTEGRATION	SYC	FW	110

REVISIONS

CONTRACT CHANGE ORDER NO._____
SHEET _____ OF _____

BRIDGE STRUCTURES GIRDER WESTBOUND
OAKLAND SUBSTATION
UNDERGROUND AND TUNNEL CONDUIT PLAN

SCALE: 1:100

E-635

THIS PLAN ACCURATE FOR ELECTRICAL WORK ONLY.

ALL DIMENSIONS ARE IN METERS UNLESS OTHERWISE SHOWN

STATE OF CALIFORNIA - DEPARTMENT OF TRANSPORTATION
Caltrans

DESIGN OVERSIGHT: BEHZAD GOLEMOHAMMADI

CALCULATED/DESIGNED BY: SYC DATE 01/10
CHECKED BY: FW 01/10
REVISED BY
DATE REVISED

FOR REDUCED PLANS ORIGINAL SCALE IS IN MILLIMETERS 0 20 40 60 80

DGN FILE =>04-0120f1_E-635.dgn
USERNAME =>llorico

CU 04251

EA 0120F1

LAST REVISION 00-00-00
DATE PLOTTED => 06-MAY-2010
TIME PLOTTED => 18:05

DIST	COUNTY	ROUTE	KILOMETER POST TOTAL PROJECT	SHEET No	TOTAL SHEETS
04	SF, Ala	80	12.2/14.3 0.0/4.0	407a 06S37	1204

Syn Yee Chin 03/08/10
REGISTERED ELECTRICAL ENGINEER DATE

05-06-2010
PLANS APPROVAL DATE

REGISTERED PROFESSIONAL ENGINEER
SYN YEE CHIN
No. 18186
Exp. 09/30/2011
ELECTRICAL
STATE OF CALIFORNIA

PB AMERICAS, Inc.
A Parsons Brinckerhoff Company
303 Second St., Suite 700N
San Francisco, CA 94107-1317

The State of California or its officers or agents shall not be responsible for the accuracy or completeness of electronic copies of this plan sheet.

Caltrans now has a web site! To get to the web site, go to http://www.dot.ca.gov

Caltrans Metric

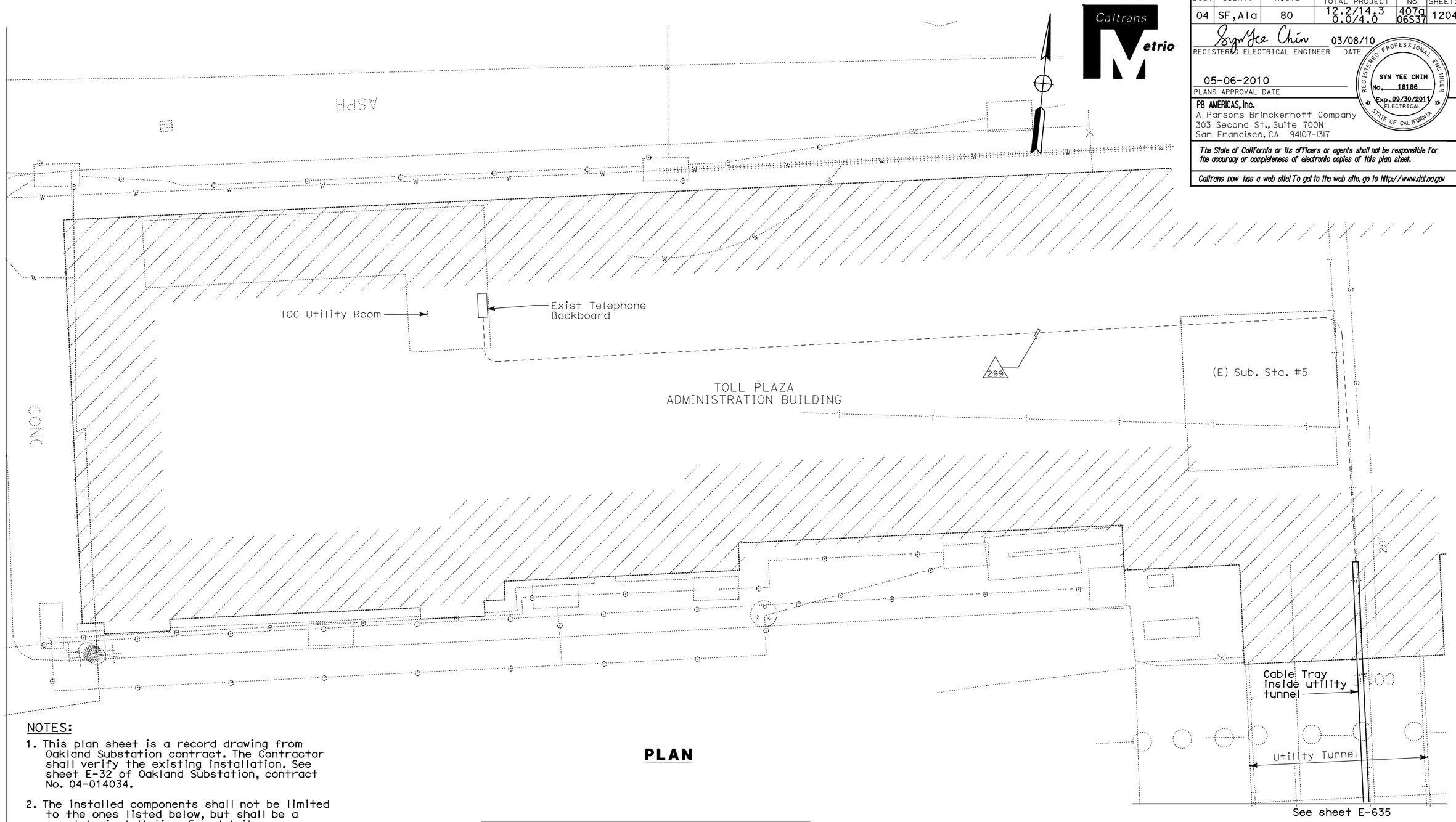

NOTES:

1. This plan sheet is a record drawing from Oakland Substation contract. The Contractor shall verify the existing installation. See sheet E-32 of Oakland Substation, contract No. 04-014034.
2. The installed components shall not be limited to the ones listed below, but shall be a complete installation. For details, see Bridge Structures Girder Westbound, typical Details sheets.
   - Furnish and install TOS fiber optic cables into existing cable tray shown on this drawing and continue to termination in TOS Cabinet in Toll Plaza Administration Building. Refer to riser diagram on sheets E-978 through E-981.
3. All cable trays and conduits shown on this drawing are existing. Bold ones are to be used for pulling cable.

PLAN

REQUEST FOR INFORMATION NOT ADDRESSED IN THIS CCO REMAIN IN FORCE						
MARK	DATE	REVISIONS DESCRIPTIONS	BY	CH'D	CCO#
0	03/08/10	MEP INTEGRATION	SYC	FW	110

CONTRACT CHANGE ORDER NO._____
SHEET _____ OF _____

BRIDGE STRUCTURES GIRDER WESTBOUND
OAKLAND SUBSTATION
UNDERGROUND AND TUNNEL CONDUIT PLAN

SCALE: 1:100

E-636

CALCULATED/ DESIGNED BY	CHECKED BY	DESIGN OVERSIGHT
SYC	FW	BEHZAD GOLEMOHAMMADI

MARK	DATE	REVISED BY	DATE REVISED
0	03/10		

STATE OF CALIFORNIA - DEPARTMENT OF TRANSPORTATION
Caltrans

THIS PLAN ACCURATE FOR ELECTRICAL WORK ONLY.

ALL DIMENSIONS ARE IN METERS UNLESS OTHERWISE SHOWN

FOR REDUCED PLANS ORIGINAL SCALE IS IN MILLIMETERS 0 20 40 60 80

DGN FILE =>04-0120f1_E-636.dgn
USERNAME =>llorico

CU 04251

EA 0120F1

LAST REVISION 00-00-00
DATE PLOTTED => 06-MAY-2010
TIME PLOTTED => 18:05

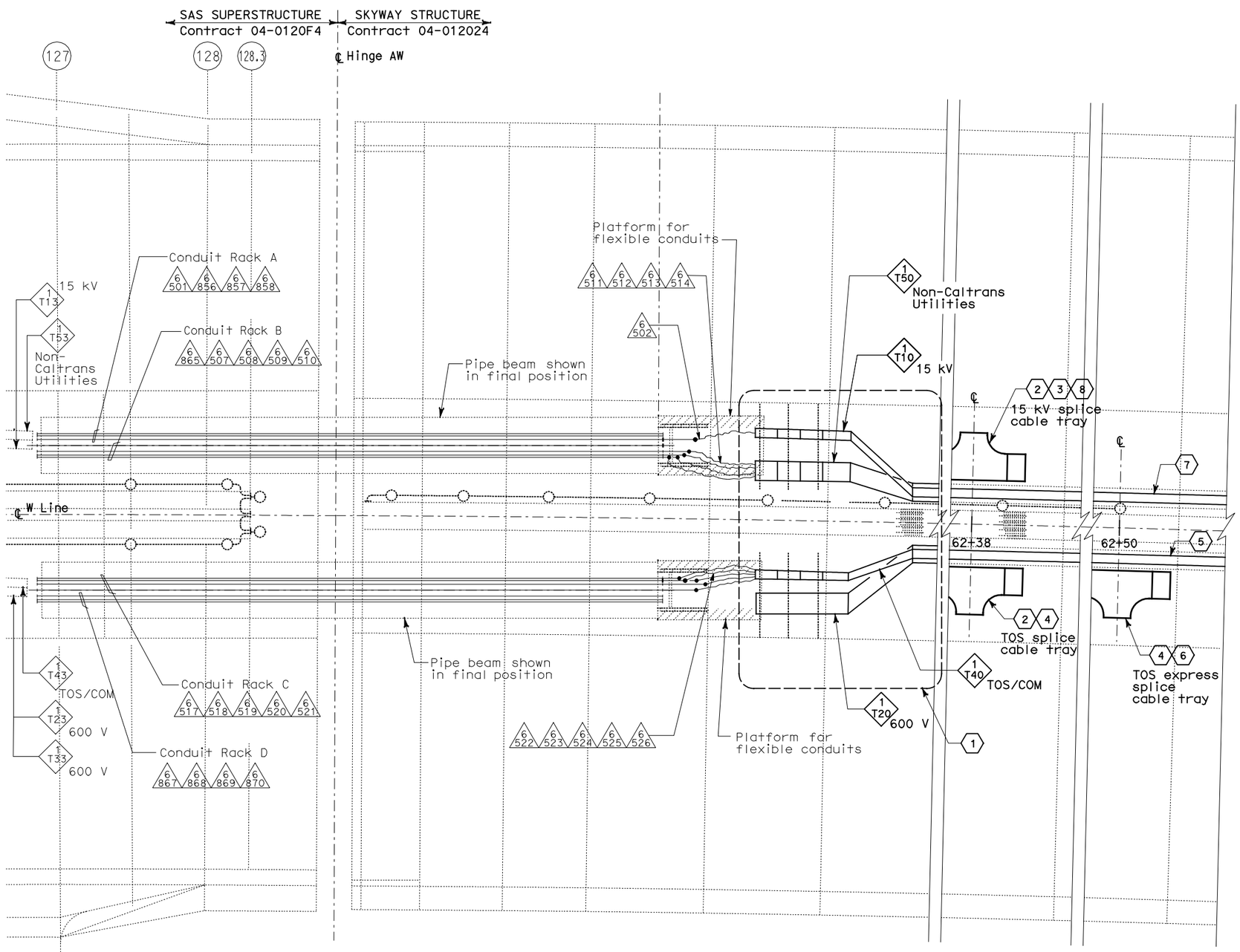

PLAN - HINGE AW

SCALE: 1:75

DIST	COUNTY	ROUTE	KILOMETER POST TOTAL PROJECT	SHEET No	TOTAL SHEETS
04	SF, Ala	80	12.2/14.3 0.0/4.0	407a 06S38	1204

Syn Yee Chin 03/08/10
REGISTERED ELECTRICAL ENGINEER DATE

05-06-2010
PLANS APPROVAL DATE

REGISTERED PROFESSIONAL ENGINEER — SYN YEE CHIN No. 18186 Exp. 09/30/2011 ELECTRICAL — STATE OF CALIFORNIA

PB AMERICAS, Inc.
A Parsons Brinckerhoff Company
303 Second St., Suite 700N
San Francisco, CA 94107-1317

The State of California or its officers or agents shall not be responsible for the accuracy or completeness of electronic copies of this plan sheet.

Caltrans now has a web site! To get to the web site, go to http://www.dot.ca.gov

NOTES:

1. This plan sheet is a record drawing from SAS Superstructure contract. The Contractor shall verify the existing installation. See sheet E-101A from the SAS Superstructure Contract No. 04-0120F4.
2. The installed components shall not be limited to the ones listed below, but shall be a complete instalation. For details, see Bridge Structures Girder Westbound, typical Details sheets.
   - Inspect for system ground continuity. See sheets E-666 and E-667.

SHEET NOTES:

(1) Contractor to complete the installation of 15 kV, Non-Caltrans Utilities,TOS and 600 V cable trays furnished by Skyway Contract, to facilitate installation of cables.

(2) Mount and secure splice cable tray between diaphragms at Station 62+38 as shown on E-600. See sheet E-663, section detail 5.

(3) Furnish and install splice cable tray as shown on sheet E-663, plan detail 1.

(4) Furnish and install splice cable tray as shown on sheet E-663, plan detail 2.

(5) Furnish and install TOS fiber optic cables into existing cable tray shown on this drawing. See sheets E-980, E-981, and E-982.

(6) Mount and secure splice cable tray at station 62+50 between diaphragms as shown on E-600. See sheet E-663, section detail 5.

(7) Furnish and install 15 kV cables into existing cable tray shown on this drawing. See sheets E-664 and E-665.

(8) 15 kV splice kit furnished by others.

REQUEST FOR INFORMATION NOT ADDRESSED IN THIS CCO REMAIN IN FORCE

MARK	DATE	DESCRIPTIONS	BY	CH'D	CCO#
		REVISIONS			
0	04/19/10	MEP INTEGRATION	SYC	FW	110

CONTRACT CHANGE ORDER NO._____
SHEET _____ OF _____

DETAILS
BRIDGE STRUCTURES GIRDER WESTBOUND SAS SUPERSTRUCTURE AND SKYWAY STRUCTURE INTERFACE-HINGE AW

SCALE: AS NOTED

E-637

THIS PLAN ACCURATE FOR ELECTRICAL WORK ONLY.

ALL DIMENSIONS ARE IN METERS UNLESS OTHERWISE SHOWN

FOR REDUCED PLANS ORIGINAL SCALE IS IN MILLIMETERS 0 20 40 60 80

DGN FILE =>04-0120f1_E-637.dgn
USERNAME =>llorico

CU 04251 EA 0120F1

STATE OF CALIFORNIA - DEPARTMENT OF TRANSPORTATION
Caltrans

DESIGN OVERSIGHT BEHZAD GOLEMOHAMMADI

CALCULATED/ DESIGNED BY | CHECKED BY
DATE 01/10 | 01/10
SYC | FW
REVISED BY | DATE REVISED

LAST REVISION 00-00-00
DATE PLOTTED => 06-MAY-2010
TIME PLOTTED => 18:05

DIST	COUNTY	ROUTE	KILOMETER POST TOTAL PROJECT	SHEET No	TOTAL SHEETS
04	SF, Ala	80	12.2/14.3 0.0/4.0	407a 06S39	1204

Syn Yee Chin 03/08/10
REGISTERED ELECTRICAL ENGINEER DATE

05-06-2010
PLANS APPROVAL DATE

REGISTERED PROFESSIONAL ENGINEER
SYN YEE CHIN
No. 18186
Exp. 09/30/2011
ELECTRICAL
STATE OF CALIFORNIA

PB AMERICAS, Inc.
A Parsons Brinckerhoff Company
303 Second St., Suite 700N
San Francisco, CA 94107-1317

The State of California or its officers or agents shall not be responsible for the accuracy or completeness of electronic copies of this plan sheet.

Caltrans now has a web site! To get to the web site, go to http://www.dot.ca.gov

Caltrans Metric

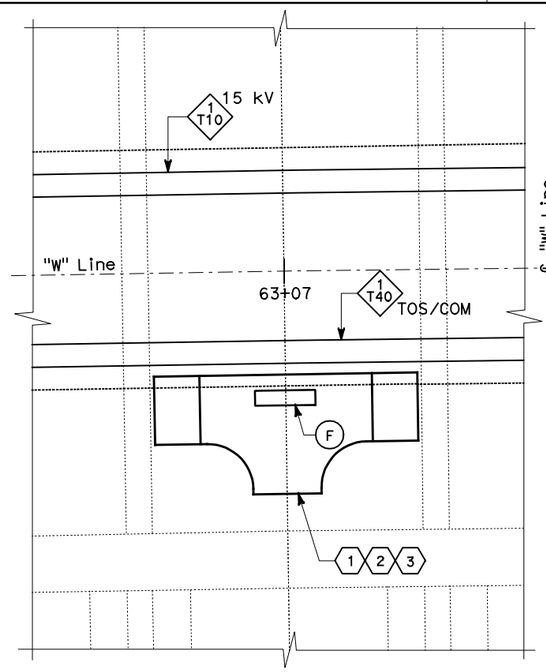

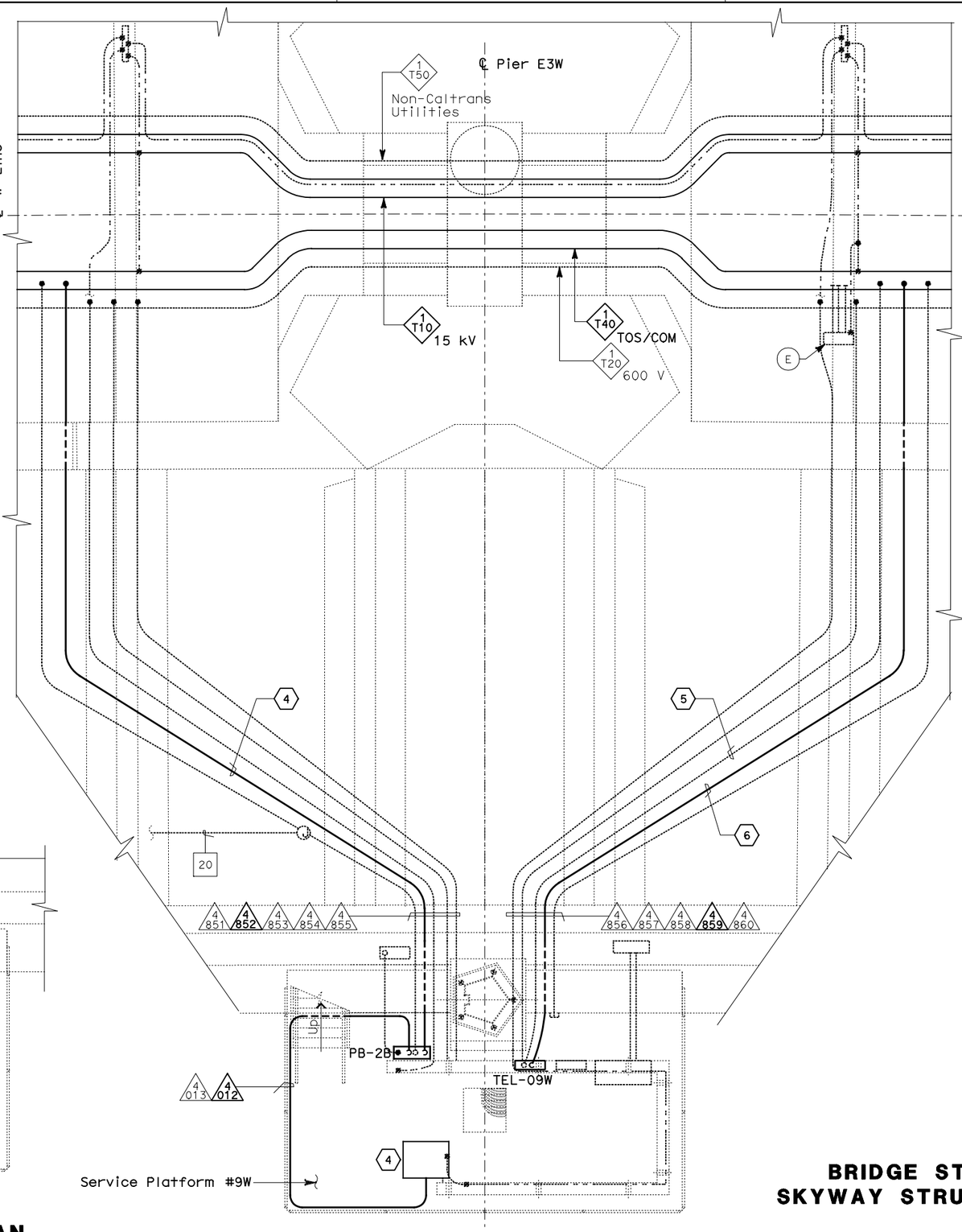

EQUIPMENT SCHEDULE:

- (A) Utility Panel UP-131
  100 A, 208/120 V, 3-Phase, 4-Wire
- (B) Controller Cabinet #TOS-09WA
- (C) Telephone Terminal Box #TEL-09W
- (D) Navigation Relay Cabinet #NAP-9W
- (E) Scada Communication Terminal Box #COM-09W
- (F) Fiber Optic Splice Closure #FSC-09W

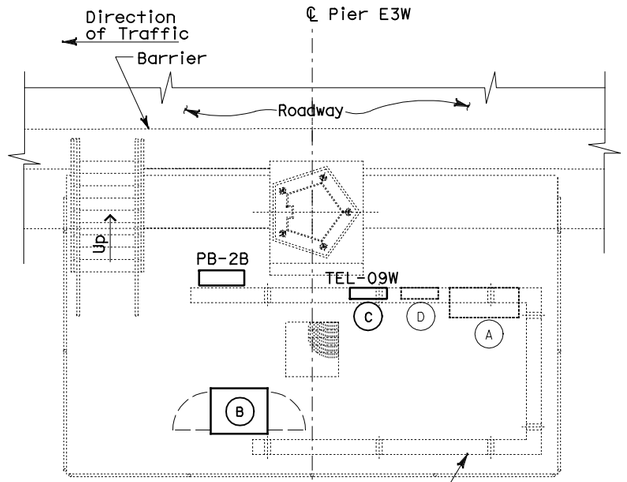

SERVICE PLATFORM #9W EQUIPMENT ARRANGEMENT PLAN

SCALE: 1:40

THIS PLAN ACCURATE FOR ELECTRICAL WORK ONLY.

CONDUIT AND GROUNDING PLAN - WB

SCALE: 1:40

ALL DIMENSIONS ARE IN METERS UNLESS OTHERWISE SHOWN

NOTES:

1. This plan sheet is a record drawing from Skyway Structures contract. The Contractor shall verify the existing installation. See sheet EE-266 from Skyway Structures, Contract No. 04-012024.
2. The installed components shall not be limited to the ones listed below, but shall be a complete installation. For details, see Bridge Structures Girder Westbound, typical Details sheets.
   - Furnish and install the 15kV cables into existing cable tray shown on this drawing. See sheets E-664 and E-665.
   - Furnish and install the TOS fiber optic cables into existing cable tray and conduits shown on this drawing. Pull a 72 fiber in the main tray and terminate in the splice closure. See sheets E-978 through E-981.
   - Inspect for system ground continuity. See sheets E-666 and E-667.
3. All cable trays, conduits and equipment shown on this drawing are existing. Bold ones are to be used for pulling cable.

SHEET NOTES:

1. Furnish and install splice cable tray as shown on sheet E-663, plan detail 2.
2. Mount splice cable tray between diaphragms, and secure properly. See sheet E-663, section detail 4.
3. Contractor shall locate the splice cable tray at Station 63+07 as shown on E-601.
4. Furnish and install 12 fiber optic cables from Fiber Optic Splice Closure to Controller Cabinet. Route via pull box PB-2B. Coil 3m of cable inside Controller Cabinet for connections by others. The coiled end of the fiber optic cables shall be terminated with mated connectors. See sheets E-972 and E-973.
5. Pulling and termination of cables shall be done by Others.
6. Pull and terminate 50 pair telephone cable in Telephone Terminal Box. See sheets E-960, E-962 and E-964.

REQUEST FOR INFORMATION NOT ADDRESSED IN THIS CCO REMAIN IN FORCE

MARK	DATE	REVISIONS DESCRIPTIONS	BY	CH'D	CCO#
0	03/08/10	MEP INTEGRATION	SYC	FW	110

CONTRACT CHANGE ORDER NO._____
SHEET _____ OF _____

DETAILS
BRIDGE STRUCTURES GIRDER WESTBOUND
SKYWAY STRUCTURES - SERVICE PLATFORM #9W

SCALE AS NOTED

E-638

DESIGNED BY	CALCULATED BY	CHECKED BY	DESIGN OVERSIGHT
SYC	FW	01/10	BEHZAD GOLEMOHAMMADI

MARK	DATE	REVISED BY	DATE REVISED
0	01/10		

STATE OF CALIFORNIA - DEPARTMENT OF TRANSPORTATION
Caltrans

FOR REDUCED PLANS ORIGINAL SCALE IS IN MILLIMETERS 0 20 40 60 80

DGN FILE =>04-0120f1_E-638.dgn
USERNAME =>llorico

CU 04251 EA 0120F1

LAST REVISION 00-00-00
DATE PLOTTED => 06-MAY-2010
TIME PLOTTED => 18:06

DIST	COUNTY	ROUTE	KILOMETER POST TOTAL PROJECT	SHEET No	TOTAL SHEETS
04	SF, Ala	80	12.2/14.3 0.0/4.0	407a 06S40	1204

Synyee Chin 03/08/10
REGISTERED ELECTRICAL ENGINEER DATE

05-06-2010
PLANS APPROVAL DATE

REGISTERED PROFESSIONAL ENGINEER
SYN YEE CHIN
No. 18186
Exp. 09/30/2011
ELECTRICAL
STATE OF CALIFORNIA

PB AMERICAS, Inc.
A Parsons Brinckerhoff Company
303 Second St., Suite 700N
San Francisco, CA 94107-1317

The State of California or its officers or agents shall not be responsible for the accuracy or completeness of electronic copies of this plan sheet.

Caltrans now has a web site! To get to the web site, go to http://www.dot.ca.gov

Caltrans Metric

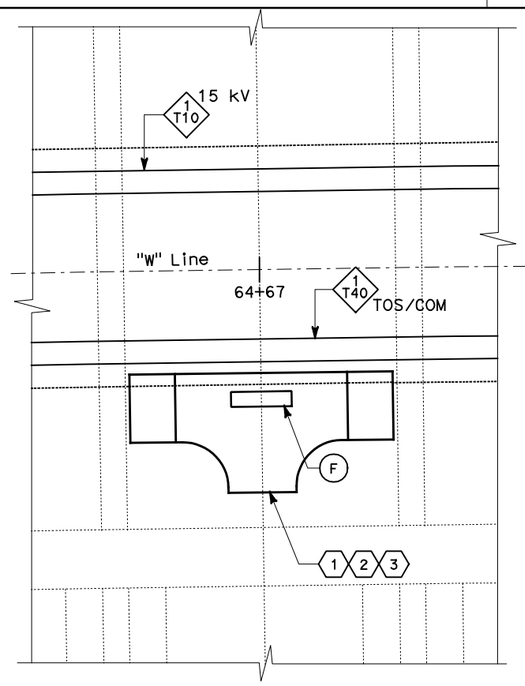

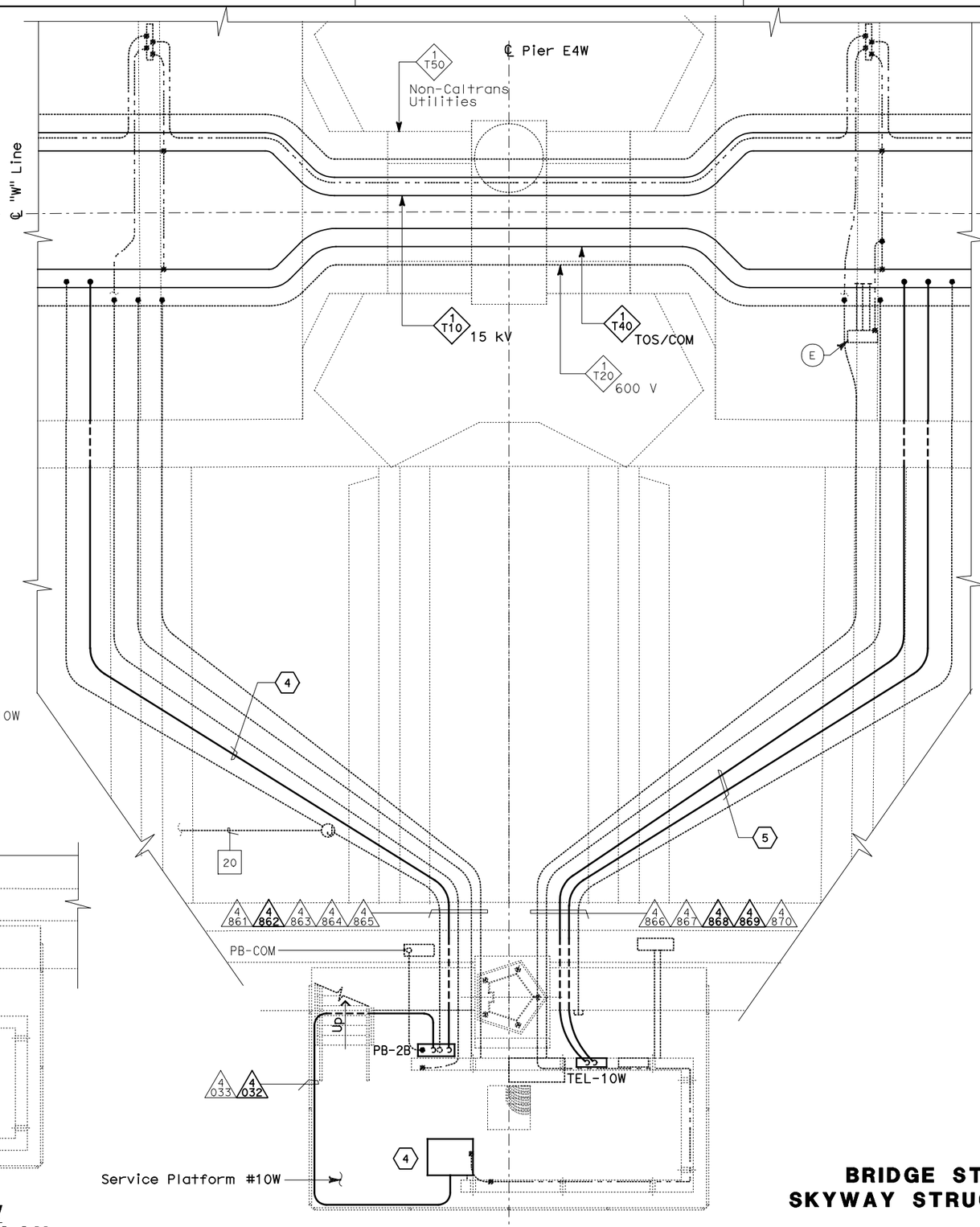

EQUIPMENT SCHEDULE:

- (A) Utility Panel UP-132
  100 A, 208/120 V, 3-Phase, 4-Wire
- (B) Controller Cabinet #TOS-10WA
- (C) Telephone Terminal Box #TEL-10W
- (D) Navigation Relay Cabinet #NAP-10W
- (E) Scada Communication Terminal Box #COM-10W
- (F) Fiber Optic Splice Closure #FSC-10W

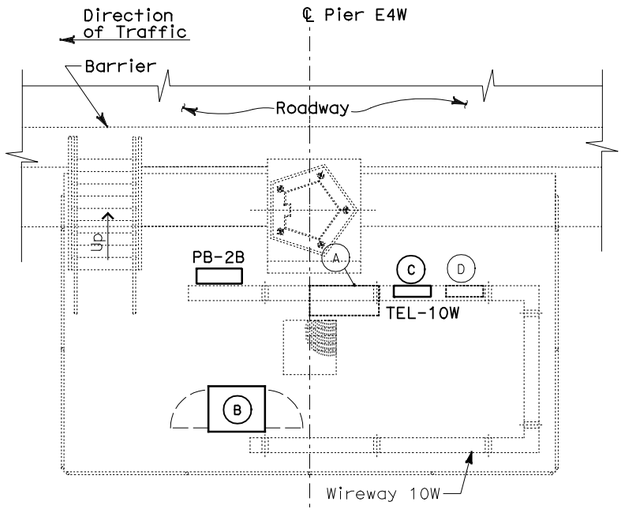

SERVICE PLATFORM #10W EQUIPMENT ARRANGEMENT PLAN

SCALE: 1:40

THIS PLAN ACCURATE FOR ELECTRICAL WORK ONLY.

CONDUIT AND GROUNDING PLAN - WB

SCALE: 1:40

ALL DIMENSIONS ARE IN METERS UNLESS OTHERWISE SHOWN

NOTES:

1. This plan sheet is a record drawing from Skyway Structures contract. The Contractor shall verify the existing installation. See sheet EE-267 Skyway Structures, Contract No. 04-012024.
2. The installed components shall not be limited to the ones listed below, but shall be a complete installation. For details, see Bridge Structures Girder Westbound, typical Details sheets.
   - Furnish and install the 15kV cables into existing cable tray shown on this drawing. See sheets E-664 and E-665.
   - Furnish and install the TOS fiber optic cables into existing cable tray and conduits shown on this drawing. Pull a 72 fiber in the main tray and terminate in the splice closure. See sheets E-978 through E-981.
   - Inspect for system ground continuity. See sheets E-666 and E-667.
3. All cable trays, conduits and equipment shown on this drawing are existing. Bold ones are to be used for pulling cable.

SHEET NOTES:

1. Furnish and install splice cable tray as shown on sheet E-663, plan detail 2.
2. Mount splice cable tray between diaphragms and secure properly. See sheet E-663, section detail 4.
3. Contractor shall locate the splice cable tray at Station 64+67 as shown on E-602.
4. Furnish and install 12 fiber optic cables from Fiber Optic Splice Closure to Controller Cabinet. Route via pull box PB-2B. Coil 3m of cable inside Controller Cabinet for connections by others. The coiled end of the fiber optic cables shall be terminated with mated connectors. See sheets E-972 and E-973.
5. Pull and terminate 50 pair telephone cable in Telephone Terminal Box. See sheets E-960, E-962 and E-964.

REQUEST FOR INFORMATION NOT ADDRESSED IN THIS CCO REMAIN IN FORCE

MARK	DATE	REVISIONS DESCRIPTIONS	BY	CH'D	CCO#
0	03/08/10	MEP INTEGRATION	SYC	FW	110

CONTRACT CHANGE ORDER NO._____
SHEET _____ OF _____

DETAILS
BRIDGE STRUCTURES GIRDER WESTBOUND
SKYWAY STRUCTURES - SERVICE PLATFORM #10W

SCALE AS NOTED

E-639

DATE	REVISED BY
01/10	DATE REVISED
SYC	FW
CALCULATED/ DESIGNED BY	CHECKED BY

DESIGN OVERSIGHT
BEHZAD GOLEMOHAMMADI

STATE OF CALIFORNIA - DEPARTMENT OF TRANSPORTATION
Caltrans

LAST REVISION 00-00-00
DATE PLOTTED => 06-MAY-2010
TIME PLOTTED => 18:06

FOR REDUCED PLANS ORIGINAL SCALE IS IN MILLIMETERS 0 20 40 60 80

DGN FILE =>04-0120f1_E-639.dgn
USERNAME =>llorico

CU 04251

EA 0120F1

DIST	COUNTY	ROUTE	KILOMETER POST TOTAL PROJECT	SHEET No	TOTAL SHEETS
04	SF, Ala	80	12.2/14.3 0.0/4.0	407a 06S41	1204

Syn Yee Chin 03/08/10
REGISTERED ELECTRICAL ENGINEER DATE

05-06-2010
PLANS APPROVAL DATE

REGISTERED PROFESSIONAL ENGINEER
SYN YEE CHIN
No. 18186
Exp. 09/30/2011
ELECTRICAL
STATE OF CALIFORNIA

PB AMERICAS, Inc.
A Parsons Brinckerhoff Company
303 Second St., Suite 700N
San Francisco, CA 94107-1317

The State of California or its officers or agents shall not be responsible for the accuracy or completeness of electronic copies of this plan sheet.

Caltrans now has a web site! To get to the web site, go to http://www.dot.ca.gov

Caltrans Metric

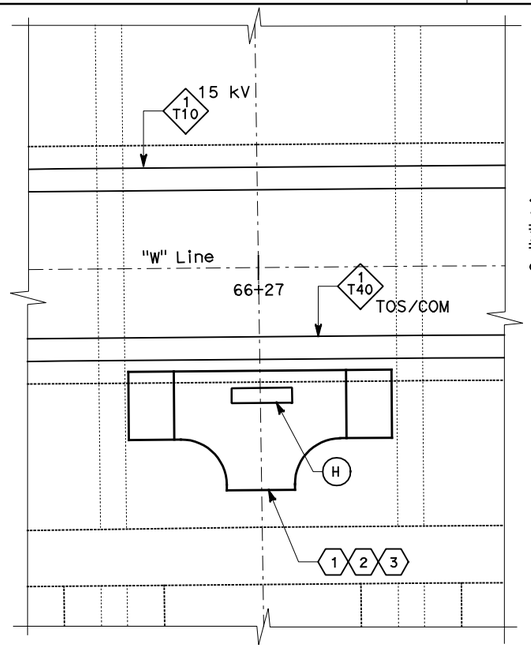

EQUIPMENT SCHEDULE:

- (A) Utility Panel UP-133
  100 A, 208/120 V, 3-Phase, 4-Wire
- (B) Controller Cabinet #TOS-11WA
- (C) Utility Panel UP-144
  100 A, 120/240 V, 1-Phase,
  3-Wire with 25 kVA
  Transformer, 480-120/240 V
- (D) Remote Terminal Unit RTU#12W
- (E) Telephone Terminal Box #TEL-11W
- (F) Navigation Relay Cabinet #NAP-11W
- (G) Scada Communication Terminal Box #COM-11W
- (H) Fiber Optic Splice Closure #FSC-11W
- (J) Controller Cabinet #TOS-11WB

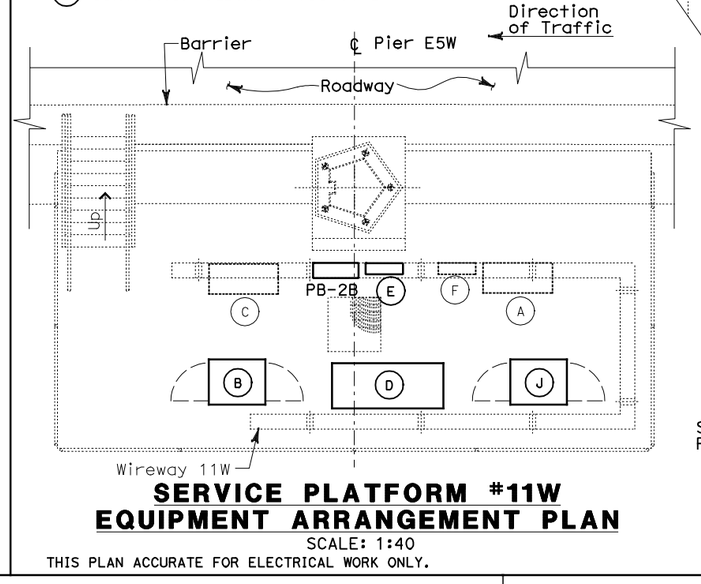

SERVICE PLATFORM #11W EQUIPMENT ARRANGEMENT PLAN

SCALE: 1:40

THIS PLAN ACCURATE FOR ELECTRICAL WORK ONLY.

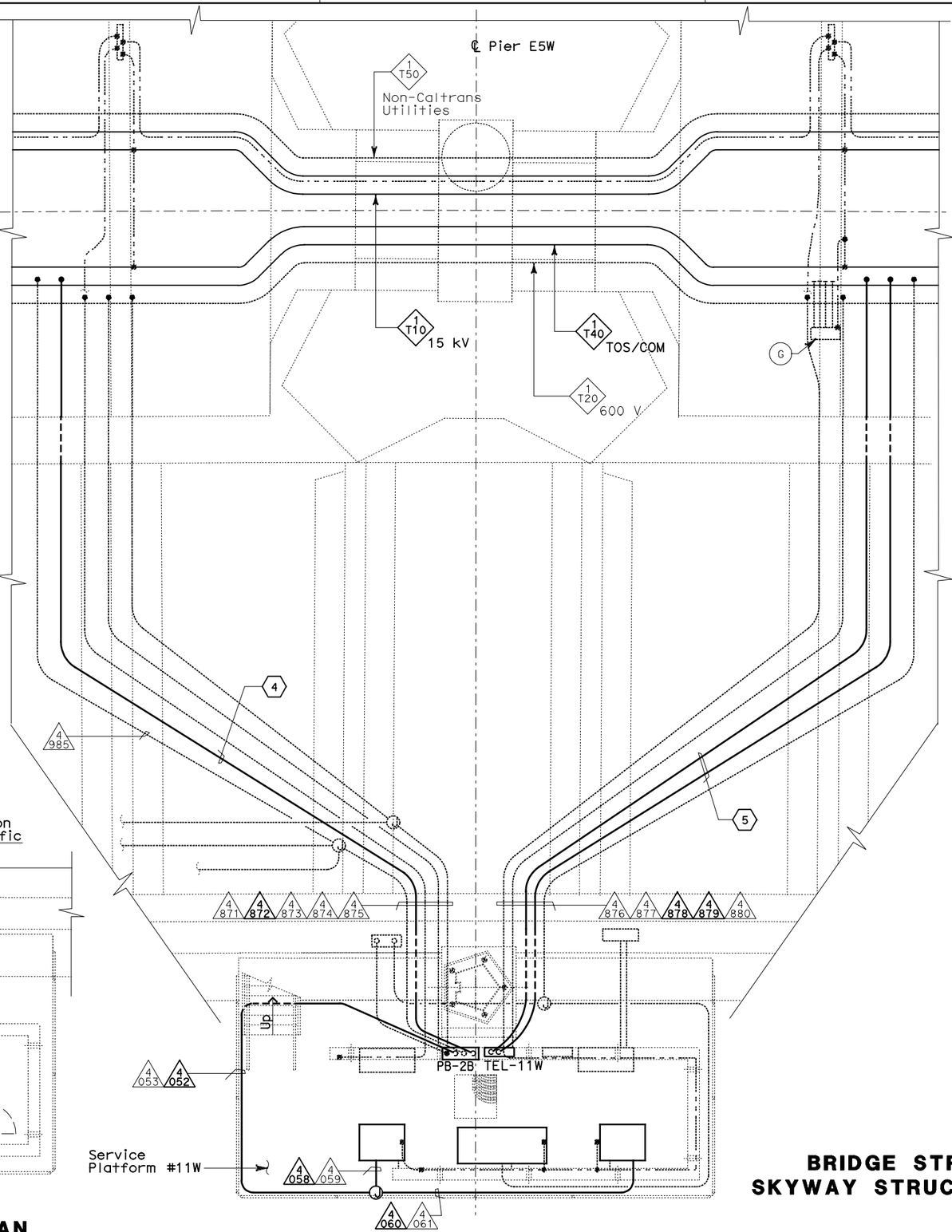

CONDUIT AND GROUNDING PLAN - WB

SCALE: 1:40

ALL DIMENSIONS ARE IN METERS UNLESS OTHERWISE SHOWN

NOTES:

1. This plan sheet is a record drawing from Skyway Structures contract. The Contractor shall verify the existing installation. See sheet EE-268 from Skyway Structures, Contract No. 04-012024.
2. The installed components shall not be limited to the ones listed below, but shall be a complete installation. For details, see Bridge Structures Girder Westbound, typical Details sheets.
   - Furnish and install the 15kV cables into existing cable tray shown on this drawing. See sheets E-664 and E-665.
   - Furnish and install the TOS fiber optic cables into existing cable tray and conduits shown on this drawing. Pull a 72 fiber in the main tray and terminate in the splice closure. See sheets E-978 through E-981.
   - Inspect for system ground continuity. See sheets E-666 and E-667.
   - Remote Terminal Unit #12W. See sheets E-902 through E-906.
3. All cable trays, conduits and equipment shown on this drawing are existing. Bold ones are to be used for pulling cable.

SHEET NOTES:

(1) Furnish and install splice cable tray as shown on sheet E-663, plan detail 2.

(2) Mount splice cable tray between diaphragms, and secure properly. See sheet E-663, section detail 4.

(3) Contractor shall locate the splice cable tray at Station 66+27 as shown on E-603.

(4) Furnish and install two 12 fiber optic cables from Fiber Optic Splice Closure to Controller Cabinet. Route via pull box PB-2B. Coil 3m of cable inside Controller Cabinet for connections by others. The coiled end of the fiber optic cables shall be terminated with mated connectors. See sheets E-972 and E-973.

(5) Pull and terminate 50 pair telephone cable in Telephone Terminal Box. See sheets E-960, E-962 and E-964.

REQUEST FOR INFORMATION NOT ADDRESSED IN THIS CCO REMAIN IN FORCE

MARK	DATE	DESCRIPTIONS	BY	CH'D	CCO#
		REVISIONS			
0	03/08/10	MEP INTEGRATION	SYC	FW	110

CONTRACT CHANGE ORDER NO. _____
SHEET _____ OF _____

DETAILS
BRIDGE STRUCTURES GIRDER WESTBOUND
SKYWAY STRUCTURES - SERVICE PLATFORM #11W

SCALE AS NOTED

E-640

CALCULATED/ DESIGNED BY	CHECKED BY
SYC	FW

DATE	REVISED BY	DATE REVISED
01/10		01/10

DESIGN OVERSIGHT
BEHZAD GOLEMOHAMMADI

STATE OF CALIFORNIA - DEPARTMENT OF TRANSPORTATION
Caltrans

LAST REVISION 00-00-00
DATE PLOTTED => 06-MAY-2010
TIME PLOTTED => 18:06

FOR REDUCED PLANS ORIGINAL SCALE IS IN MILLIMETERS 0 20 40 60 80

DGN FILE =>04-0120f1_E-640.dgn
USERNAME =>llorico

CU 04251

EA 0120F1

DIST	COUNTY	ROUTE	KILOMETER POST TOTAL PROJECT	SHEET No	TOTAL SHEETS
04	SF, Ala	80	12.2/14.3 0.0/4.0	407a 06S42	1204

Syn Yee Chin 03/08/10
REGISTERED ELECTRICAL ENGINEER DATE

05-06-2010
PLANS APPROVAL DATE

REGISTERED PROFESSIONAL ENGINEER
SYN YEE CHIN
No. 18186
Exp. 09/30/2011
ELECTRICAL
STATE OF CALIFORNIA

PB AMERICAS, Inc.
A Parsons Brinckerhoff Company
303 Second St., Suite 700N
San Francisco, CA 94107-1317

The State of California or its officers or agents shall not be responsible for the accuracy or completeness of electronic copies of this plan sheet.

Caltrans now has a web site! To get to the web site, go to http://www.dot.ca.gov

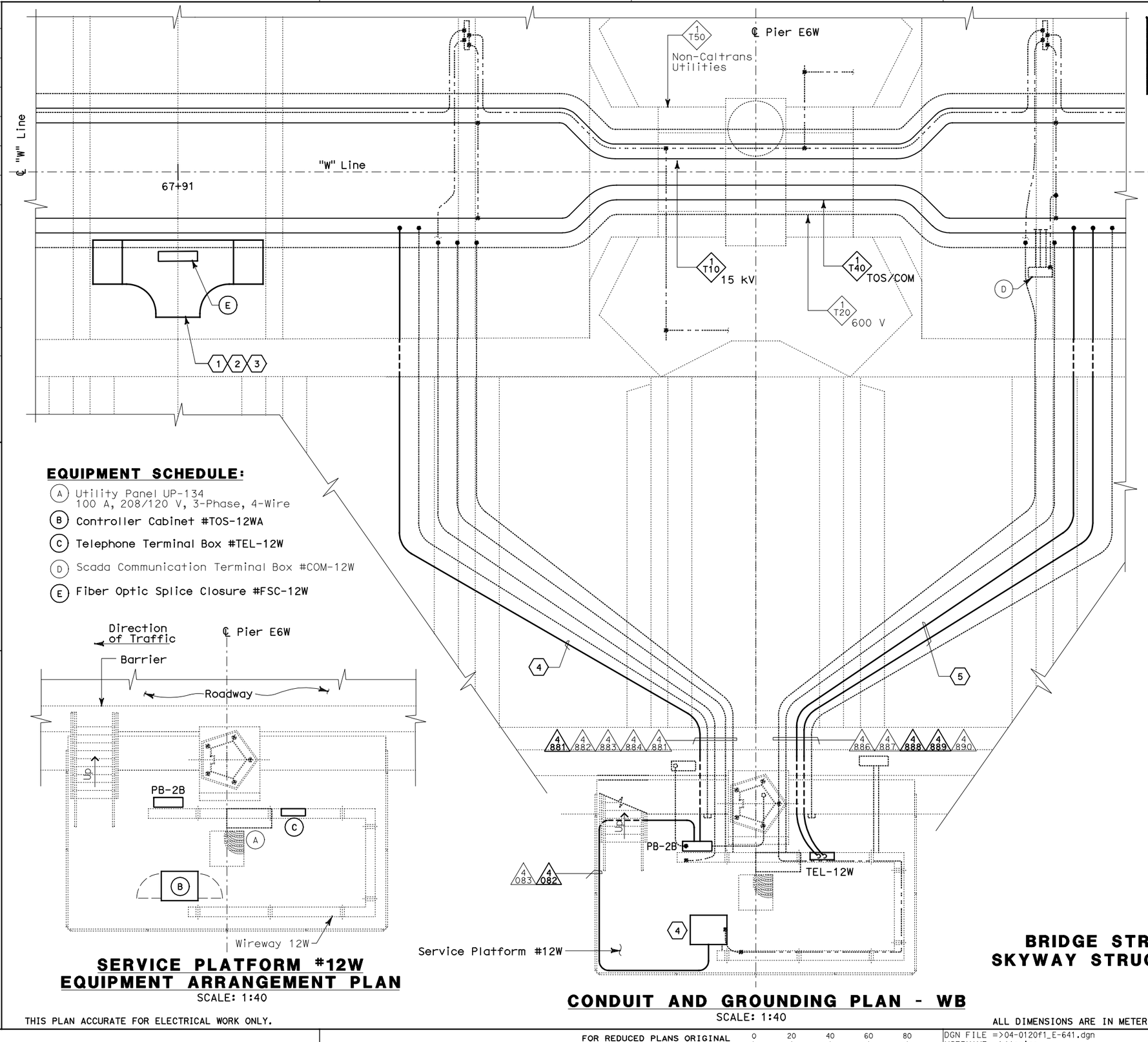

EQUIPMENT SCHEDULE:

- (A) Utility Panel UP-134
  100 A, 208/120 V, 3-Phase, 4-Wire
- (B) Controller Cabinet #TOS-12WA
- (C) Telephone Terminal Box #TEL-12W
- (D) Scada Communication Terminal Box #COM-12W
- (E) Fiber Optic Splice Closure #FSC-12W

SERVICE PLATFORM #12W EQUIPMENT ARRANGEMENT PLAN

SCALE: 1:40

CONDUIT AND GROUNDING PLAN - WB

SCALE: 1:40

NOTES:

1. This plan sheet is a record drawing from Skyway Structures contract. The Contractor shall verify the existing installation. See sheet EE-269 from Skyway Structures, Contract No. 04-012024.
2. The installed components shall not be limited to the ones listed below, but shall be a complete installation. For details, see Bridge Structures Girder Westbound, typical Details sheets.
   - Furnish and install the 15kV cables into existing cable tray shown on this drawing. See sheets E-664 and E-665.
   - Furnish and install the TOS fiber optic cables into existing cable tray and conduits shown on this drawing. Pull a 72 fiber in the main tray and terminate in the splice closure. See sheets E-978 through E-981.
   - Inspect for system ground continuity. See sheets E-666 and E-667.
3. All cable trays, conduits and equipment shown on this drawing are existing. Bold ones are to be used for pulling cable.

SHEET NOTES:

1. Furnish and install splice cable tray as shown on sheet E-663, plan detail 2.
2. Mount splice cable tray between diaphragms, and secure properly. See sheet E-663, section detail 4.
3. Contractor shall locate the splice cable tray at Station 67+91 as shown on E-604.
4. Furnish and install 12 fiber optic cables from Fiber Optic Splice Closure to Controller Cabinet. Route via pull box PB-2B. Coil 3m of cable inside Controller Cabinet for connections by others. The coiled end of the fiber optic cables shall be terminated with mated connectors. See sheets E-972 and E-973.
5. Pull and terminate 50 pair telephone cable in Telephone Terminal Box. See sheets E-960, E-962 and E-964.

REQUEST FOR INFORMATION NOT ADDRESSED IN THIS CCO REMAIN IN FORCE

MARK	DATE	DESCRIPTIONS	BY	CH'D	CCO#
		REVISIONS			
0	03/08/10	MEP INTEGRATION	SYC	FW	110

CONTRACT CHANGE ORDER NO._____
SHEET _____ OF _____

DETAILS
BRIDGE STRUCTURES GIRDER WESTBOUND
SKYWAY STRUCTURES-SERVICE PLATFORM #12W

SCALE AS NOTED

E-641

THIS PLAN ACCURATE FOR ELECTRICAL WORK ONLY.

ALL DIMENSIONS ARE IN METERS UNLESS OTHERWISE SHOWN

FOR REDUCED PLANS ORIGINAL SCALE IS IN MILLIMETERS 0 20 40 60 80

DGN FILE =>04-0120f1_E-641.dgn
USERNAME =>llorico

CU 04251

EA 0120F1

DESIGN OVERSIGHT BEHZAD GOLEMOHAMMADI

CALCULATED/DESIGNED BY SYC DATE 01/10 REVISED BY
CHECKED BY FW 01/10 DATE REVISED

STATE OF CALIFORNIA - DEPARTMENT OF TRANSPORTATION

LAST REVISION 00-00-00 DATE PLOTTED => 06-MAY-2010 TIME PLOTTED => 18:06

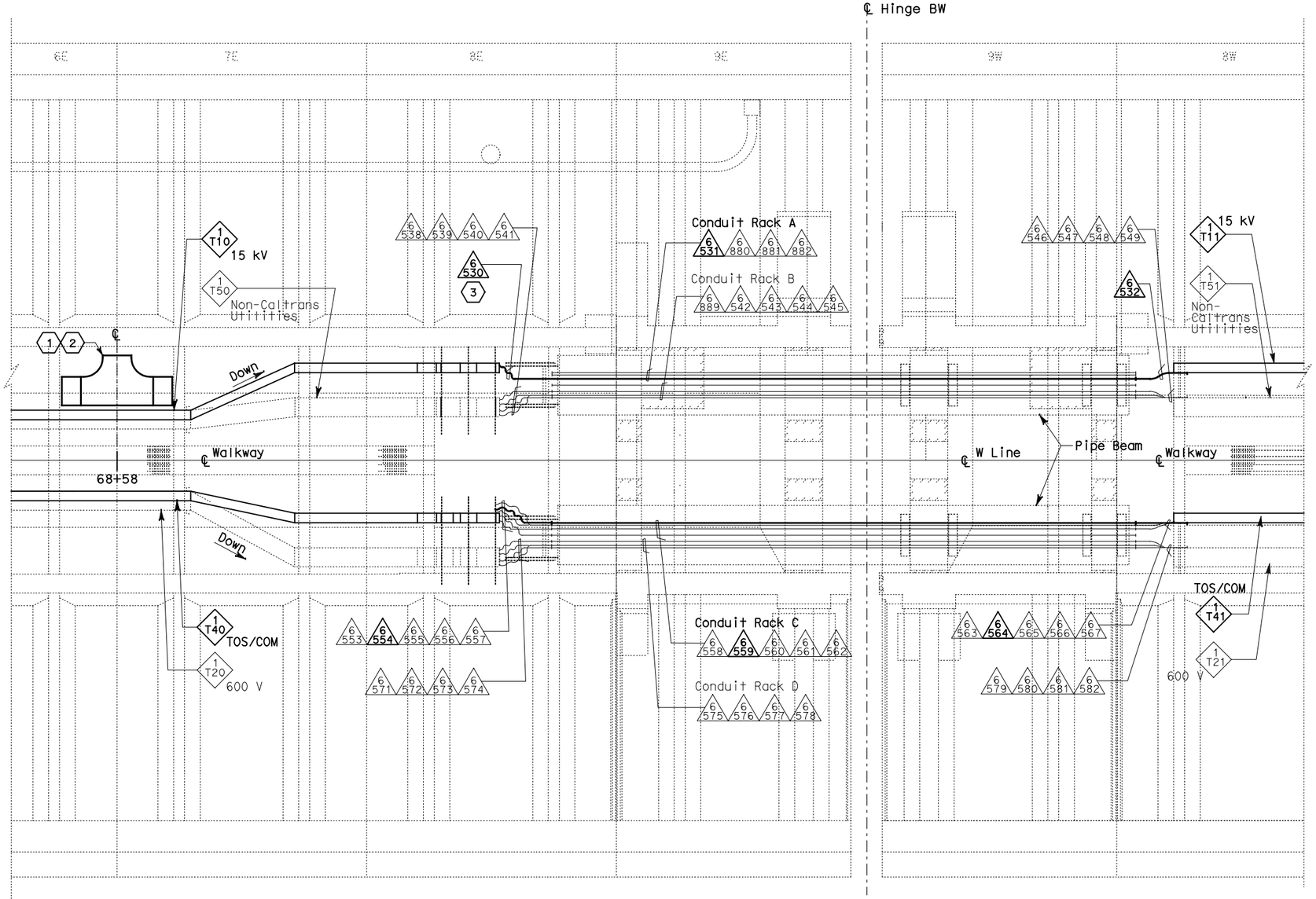

PLAN - HINGE BW

SCALE: 1:75

REQUEST FOR INFORMATION NOT ADDRESSED IN THIS CCO REMAIN IN FORCE					
MARK	DATE	DESCRIPTIONS	BY	CH'D	CCO#
		REVISIONS			
0	03/08/10	MEP INTEGRATION	SYC	FW	110

CONTRACT CHANGE ORDER NO._____
SHEET _____ OF _____

DETAILS
BRIDGE STRUCTURES GIRDER WESTBOUND
SKYWAY STRUCTURES-HINGE BW

SCALE AS NOTED

E-642

Caltrans Metric

DIST	COUNTY	ROUTE	KILOMETER POST TOTAL PROJECT	SHEET No	TOTAL SHEETS
04	SF, Ala	80	12.2/14.3 0.0/4.0	407a 06S43	1204

Syn Yee Chin 03/08/10
REGISTERED ELECTRICAL ENGINEER DATE

REGISTERED PROFESSIONAL ENGINEER
SYN YEE CHIN
No. 18186
Exp. 09/30/2011
ELECTRICAL
STATE OF CALIFORNIA

05-06-2010
PLANS APPROVAL DATE

PB AMERICAS, Inc.
A Parsons Brinckerhoff Company
303 Second St., Suite 700N
San Francisco, CA 94107-1317

The State of California or its officers or agents shall not be responsible for the accuracy or completeness of electronic copies of this plan sheet.

Caltrans now has a web site! To get to the web site, go to http://www.dot.ca.gov

NOTES:

1. This plan sheet is a record drawing from Skyway Structures contract. The Contractor shall verify the existing installation. See sheet EE-296A from Skyway Structures, contract No. 04-012024.
2. The installed components shall not be limited to the ones listed below, but shall be a complete installation, For details, see Bridge Structures Girder Westbound, typical Details sheets.
   - Furnish and install the 15kV cables into existing cable trays and conduits shown on this drawing. See sheets E-664 and E-665.
   - Furnish and install fiber optic cables into existing cable trays and conduits shown on this drawing. See sheets E-978 through E-981.
   - Inspect for system ground continuity. See sheets E-666 and E-667.
3. All cable trays and conduits shown on this drawing are existing. Bold ones are to be used for pulling cable.

SHEET NOTES:

(1) Furnish and install splice cable tray as shown on sheet E-663, plan detail 1.

(2) Mount splice cable tray between diaphragms at Station 68+58 as shown on sheet E-605 and secure properly. See sheet E-663, section detail 4.

(3) In order to be able to pull the 15kV cable, the Contractor shall disassemble the 15kV flexible conduit installation. The 15kV flexible conduit shall be reinstalled after the 15kV cable has been installed.

DESIGN OVERSIGHT
BEHZAD GOLEMOHAMMADI

STATE OF CALIFORNIA - DEPARTMENT OF TRANSPORTATION
Caltrans

	DATE	REVISED BY
CALCULATED/DESIGNED BY		
CHECKED BY	01/10	DATE REVISED
SYC		
FW		

LAST REVISION 00-00-00
DATE PLOTTED => 06-MAY-2010
TIME PLOTTED => 18:06

THIS PLAN ACCURATE FOR ELECTRICAL WORK ONLY.

ALL DIMENSIONS ARE IN METERS UNLESS OTHERWISE SHOWN

FOR REDUCED PLANS ORIGINAL SCALE IS IN MILLIMETERS 0 20 40 60 80

DGN FILE =>04-0120f1_E-642.dgn
USERNAME =>llorico

CU 04251

EA 0120F1

DIST	COUNTY	ROUTE	KILOMETER POST TOTAL PROJECT	SHEET No	TOTAL SHEETS
04	SF, Ala	80	12.2/14.3 0.0/4.0	407a 06S44	1204

Syn Yee Chin 03/08/10
REGISTERED ELECTRICAL ENGINEER DATE

SYN YEE CHIN No. 18186 Exp. 09/30/2011 ELECTRICAL — REGISTERED PROFESSIONAL ENGINEER — STATE OF CALIFORNIA

05-06-2010
PLANS APPROVAL DATE

PB AMERICAS, Inc.
A Parsons Brinckerhoff Company
303 Second St., Suite 700N
San Francisco, CA 94107-1317

The State of California or its officers or agents shall not be responsible for the accuracy or completeness of electronic copies of this plan sheet.

Caltrans now has a web site! To get to the web site, go to http://www.dot.ca.gov

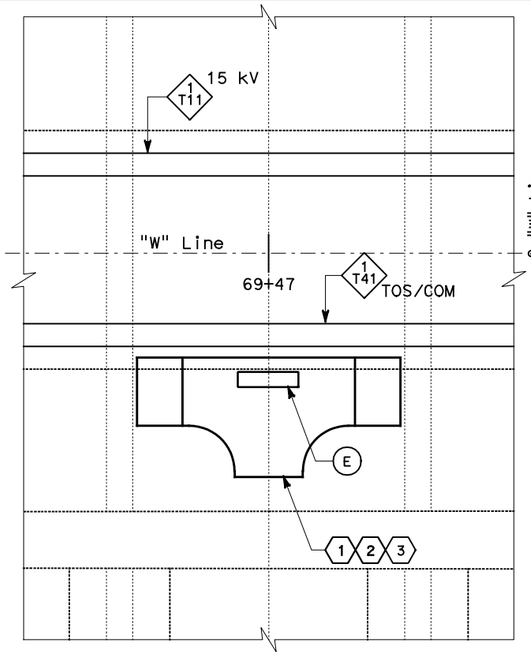

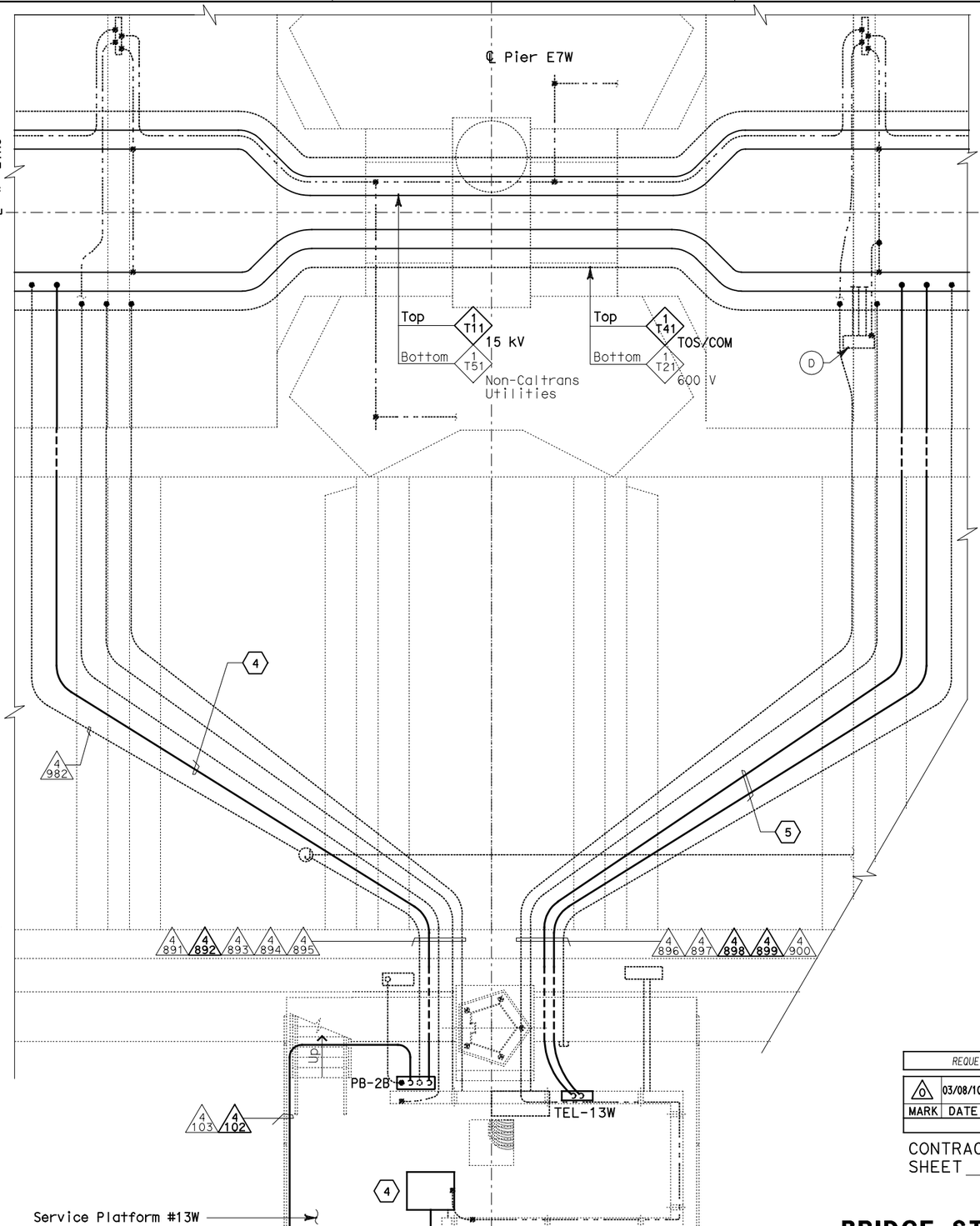

EQUIPMENT SCHEDULE:

- (A) Utility Panel UP-135 100 A, 208/120 V, 3-Phase, 4-Wire
- (B) Controller Cabinet #TOS-13WA
- (C) Telephone Terminal Box #TEL-13W
- (D) Scada Communication Terminal Box #COM-13W
- (E) Fiber Optic Splice Closure #FSC-13W

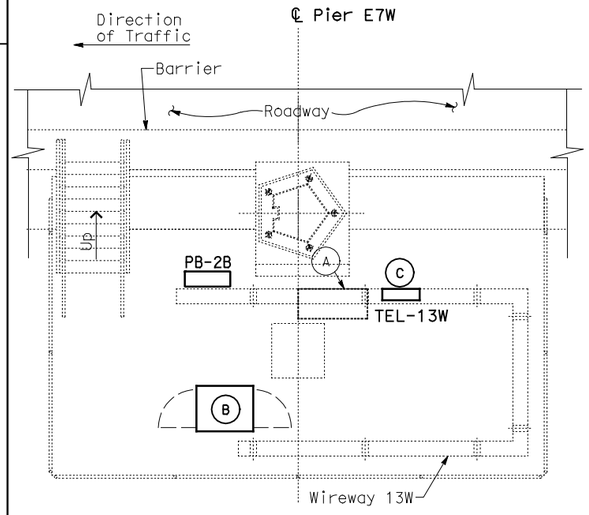

SERVICE PLATFORM #13W EQUIPMENT ARRANGEMENT PLAN

SCALE: 1:40

THIS PLAN ACCURATE FOR ELECTRICAL WORK ONLY.

CONDUIT AND GROUNDING PLAN - WB

SCALE: 1:40

ALL DIMENSIONS ARE IN METERS UNLESS OTHERWISE SHOWN

NOTES:

1. This plan sheet is a record drawing from Skyway Structures contract. The Contractor shall verify the existing installation. See sheet EE-270 from Skyway Structures, contract No. 04-012024.
2. The installed components shall not be limited to the ones listed below, but shall be a complete installation. For details, see Bridge Structures Girder Westbound, typical Details sheets.
   - Furnish and install the 15kV cables into existing cable tray shown on this drawing. See sheets E-664 and E-665.
   - Furnish and install the TOS fiber optic cables into existing cable tray and conduits shown on this drawing. Pull a 72 fiber in the main tray and terminate in the splice closure. See sheets E-978 through E-981.
   - Inspect for system ground continuity. See sheets E-666 and E-667.
3. All cable trays, conduits, and equipment shown on this drawing are existing. Bold ones are to be used for pulling cable.

SHEET NOTES:

1. Furnish and install splice cable tray as shown on sheet E-663, plan detail 2.
2. Mount splice cable tray between diaphragms and secure properly. See sheet E-663, section detail 4.
3. Contractor shall locate the splice cable tray at Station 69+47 as shown on sheet E-605.
4. Furnish and install 12 fiber optic cables from Fiber Optic Splice Closure to Controller Cabinet. Route via pull box PB-2B. Coil 3m of cable inside Controller Cabinet for connections by others. The coiled end of the fiber optic cables shall be terminated with mated connectors. See sheets E-972 and E-973.
5. Pull and terminate 50 pair telephone cable in Telephone Terminal Box. See sheets E-960, E-962 and E-964.

REQUEST FOR INFORMATION NOT ADDRESSED IN THIS CCO REMAIN IN FORCE

MARK	DATE	DESCRIPTIONS	BY	CH'D	CCO#
		REVISIONS			
0	03/08/10	MEP INTEGRATION	SYC	FW	110

CONTRACT CHANGE ORDER NO. _____
SHEET _____ OF _____

DETAILS
BRIDGE STRUCTURES GIRDER WESTBOUND
SKYWAY STRUCTURES-SERVICE PLATFORM #13W

SCALE AS NOTED

E-643

DATE	BY	REVISED
01/10	SYC	DATE REVISED
01/10	FW	CALCULATED/ DESIGNED BY
		CHECKED BY

DESIGN OVERSIGHT — BEHZAD GOLEMOHAMMADI

STATE OF CALIFORNIA - DEPARTMENT OF TRANSPORTATION — Caltrans

FOR REDUCED PLANS ORIGINAL SCALE IS IN MILLIMETERS 0 20 40 60 80

DGN FILE =>04-0120f1_E-643.dgn
USERNAME =>llorico

CU 04251

EA 0120F1

LAST REVISION 00-00-00 — DATE PLOTTED => 06-MAY-2010 — TIME PLOTTED => 18:06

DIST	COUNTY	ROUTE	KILOMETER POST TOTAL PROJECT	SHEET No	TOTAL SHEETS
04	SF, Ala	80	12.2/14.3 0.0/4.0	407a 06S45	1204

Syn Yee Chin 03/08/10
REGISTERED ELECTRICAL ENGINEER DATE

05-06-2010
PLANS APPROVAL DATE

REGISTERED PROFESSIONAL ENGINEER
SYN YEE CHIN
No. 18186
Exp. 09/30/2011
ELECTRICAL
STATE OF CALIFORNIA

PB AMERICAS, Inc.
A Parsons Brinckerhoff Company
303 Second St., Suite 700N
San Francisco, CA 94107-1317

The State of California or its officers or agents shall not be responsible for the accuracy or completeness of electronic copies of this plan sheet.

Caltrans now has a web site! To get to the web site, go to http://www.dot.ca.gov

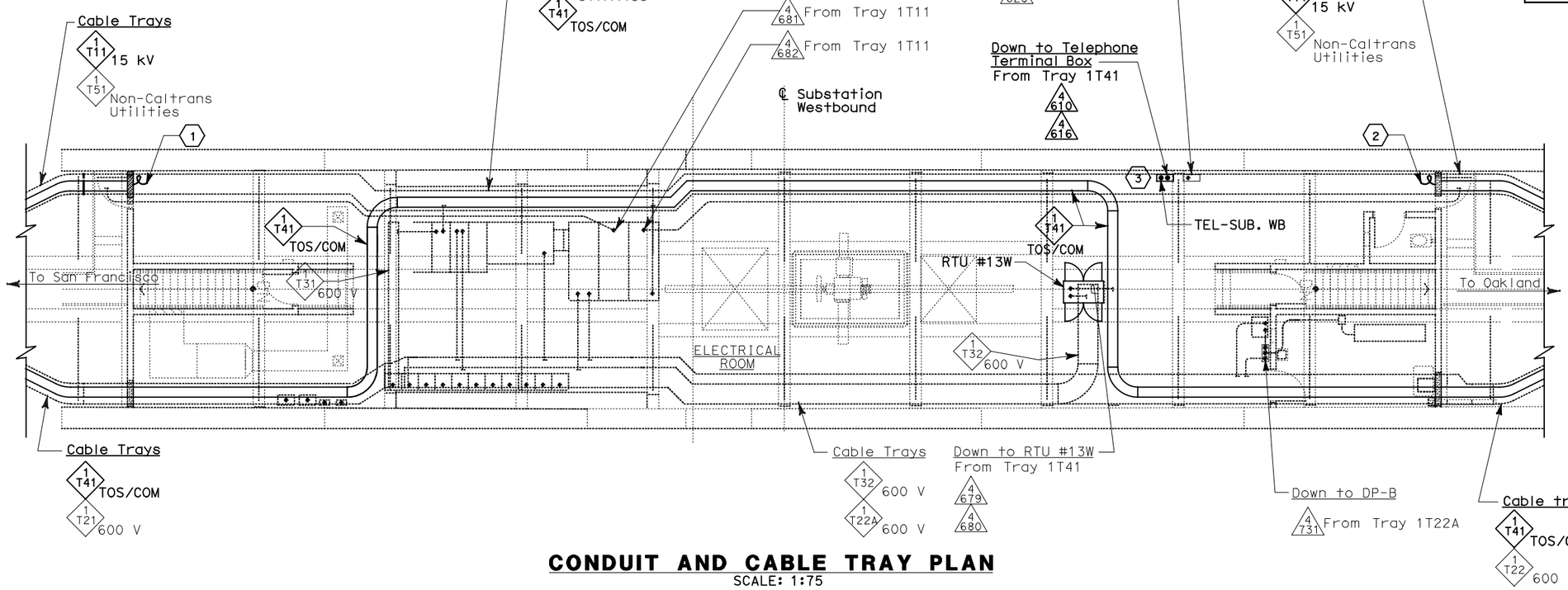

CONDUIT AND CABLE TRAY PLAN

SCALE: 1:75

NOTES:

1. This plan sheet is a record drawing from Skyway Structures contract. The Contractor shall verify the existing installation. See sheet EE-12 from Skyway Structures, contract No. 04-012024.
2. The installed components shall not be limited to the ones listed below, but shall be a complete installation. For details, see Bridge Structures Girder Westbound, typical Details sheets.
   - Furnish and install the 15 kV cables into the existing cable trays shown on this drawing. See sheets E-664 and E-665.
   - Furnish and install the TOS fiber optic cables into the existing cable trays shown on this drawing. Pull TOS fiber optic cables in the main tray. See sheets E-978 through E-981.
   - Inspect for system ground continuity. See sheets E-666 and E-667.
   - Remote Terminal Unit #13W. See sheets E-902, and E-910 through E-920.
3. All cable trays, conduits and equipment shown on this drawing are existing. Bold ones are to be used for pulling cable. Contractor to ensure that 90° bends on trays are satisfactory to meet the minimum bending radius for cables.

SHEET NOTES:

(1) Contractor to coil 25 m of 15 kV cable, sufficient to make future terminations to 12.47 kV switchgear.

(2) Contractor to coil 45 m of 15 kV cable, sufficient to make future terminations to 12.47 kV switchgear.

(3) Pull and terminate 50 pair telephone cable in Telephone Terminal Box. See sheets E-960, E-962 and E-964.

REQUEST FOR INFORMATION NOT ADDRESSED IN THIS CCO REMAIN IN FORCE					
0	03/08/10	MEP INTEGRATION	SYC	FW	110
MARK	DATE	DESCRIPTIONS	BY	CH'D	CCO#
REVISIONS					

CONTRACT CHANGE ORDER NO._____
SHEET _____ OF _____

DETAILS
BRIDGE STRUCTURES GIRDER WESTBOUND
SKYWAY STRUCTURES-SUBSTATION WESTBOUND

SCALE: AS NOTED

E-644

THIS PLAN ACCURATE FOR ELECTRICAL WORK ONLY.

ALL DIMENSIONS ARE IN METERS UNLESS OTHERWISE SHOWN

FOR REDUCED PLANS ORIGINAL SCALE IS IN MILLIMETERS 0 20 40 60 80

DGN FILE =>04-0120f1_E-644.dgn
USERNAME =>llorico

CU 04251

EA 0120F1

DESIGN OVERSIGHT BEHZAD GOLEMOHAMMADI

CALCULATED/DESIGNED BY SYC | DATE 01/10 | REVISED BY
CHECKED BY FW | 01/10 | DATE REVISED

STATE OF CALIFORNIA - DEPARTMENT OF TRANSPORTATION
Caltrans

LAST REVISION 00-00-00
DATE PLOTTED => 06-MAY-2010
TIME PLOTTED => 18:06

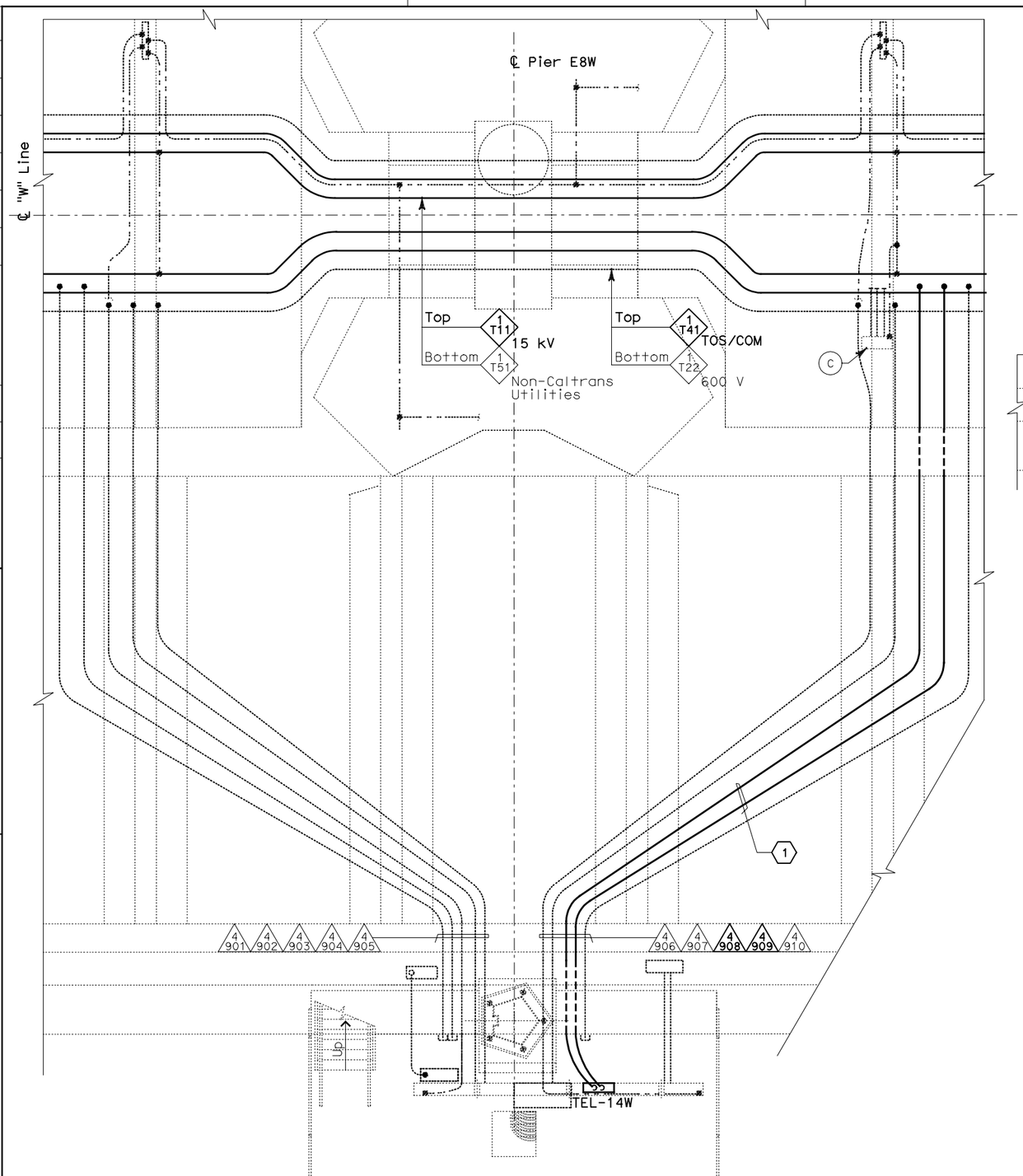

CONDUIT AND GROUNDING PLAN - WB

SCALE: 1:40

EQUIPMENT SCHEDULE:

- (A) Utility Panel UP-136
  100 A, 208/120 V, 3-Phase,
  4-Wire
- (B) Telephone Terminal Box
  #TEL-14W
- (C) Scada Communication Terminal Box
  #COM-14W

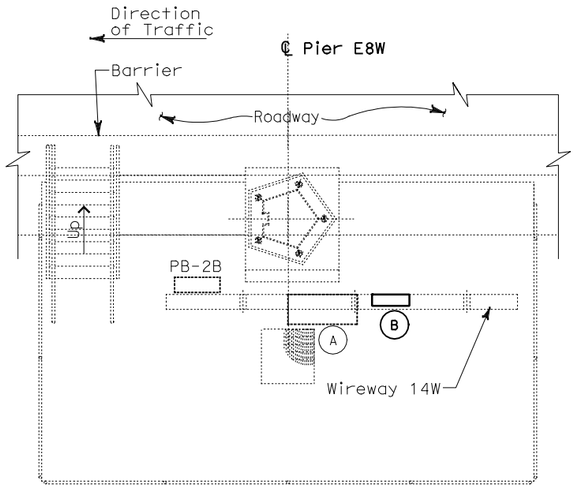

SERVICE PLATFORM #14W
EQUIPMENT ARRANGEMENT PLAN

SCALE: 1:40

NOTES:

1. This plan sheet is a record drawing from Skyway Structures contract. The Contractor shall verify the existing installation. See sheet EE-271 from Skyway Structures, contract No. 04-012024.
2. The installed components shall not be limited to the ones listed below, but shall be a complete installation. For details, see Bridge Structures Girder Westbound, typical Details sheets.
   - Furnish and install the 15kV cables into existing cable tray shown on this drawing. See sheets E-664 and E-665.
   - Furnish and install the TOS fiber optic cables into existing cable tray shown on this drawing. See sheets E-978 through E-981.
   - Inspect for system ground continuity. See sheets E-666 and E-667.
3. All cable trays, conduits and equipment shown on this drawing are existing. Bold ones are to be used for pulling cable.

SHEET NOTES:

(1) Pull and terminate 50 pair telephone cable in Telephone Terminal Box. See sheets E-960, E-962 and E-964.

DIST	COUNTY	ROUTE	KILOMETER POST TOTAL PROJECT	SHEET No	TOTAL SHEETS
04	SF, Ala	80	12.2/14.3 0.0/4.0	407a 06S46	1204

Syn Yee Chin 03/08/10
REGISTERED ELECTRICAL ENGINEER DATE

05-06-2010
PLANS APPROVAL DATE

REGISTERED PROFESSIONAL ENGINEER
SYN YEE CHIN
No. 18186
Exp. 09/30/2011
ELECTRICAL
STATE OF CALIFORNIA

PB AMERICAS, Inc.
A Parsons Brinckerhoff Company
303 Second St., Suite 700N
San Francisco, CA 94107-1317

The State of California or its officers or agents shall not be responsible for the accuracy or completeness of electronic copies of this plan sheet.

Caltrans now has a web site! To get to the web site, go to http://www.dot.ca.gov

REQUEST FOR INFORMATION NOT ADDRESSED IN THIS CCO REMAIN IN FORCE					
MARK	DATE	REVISIONS DESCRIPTIONS	BY	CH'D	CCO#
0	03/08/10	MEP INTEGRATION	SYC	FW	110

CONTRACT CHANGE ORDER NO._____
SHEET _____ OF _____

DETAILS
BRIDGE STRUCTURES GIRDER WESTBOUND
SKYWAY STRUCTURES-SERVICE PLATFORM #14W

SCALE AS NOTED

E-645

CALCULATED/ DESIGNED BY	SYC	DATE 01/10	REVISED BY
CHECKED BY	FW	01/10	DATE REVISED

DESIGN OVERSIGHT
BEHZAD GOLEMOHAMMADI

STATE OF CALIFORNIA - DEPARTMENT OF TRANSPORTATION
Caltrans

THIS PLAN ACCURATE FOR ELECTRICAL WORK ONLY.

ALL DIMENSIONS ARE IN METERS UNLESS OTHERWISE SHOWN

FOR REDUCED PLANS ORIGINAL SCALE IS IN MILLIMETERS 0 20 40 60 80

DGN FILE =>04-0120f1_E-645.dgn
USERNAME =>llorico

CU 04251

EA 0120F1

LAST REVISION 00-00-00 DATE PLOTTED => 06-MAY-2010 TIME PLOTTED => 18:07

DIST	COUNTY	ROUTE	KILOMETER POST TOTAL PROJECT	SHEET No	TOTAL SHEETS
04	SF, Ala	80	12.2/14.3 0.0/4.0	407a 06S47	1204

Syn Yee Chin 03/08/10
REGISTERED ELECTRICAL ENGINEER DATE

05-06-2010
PLANS APPROVAL DATE

REGISTERED PROFESSIONAL ENGINEER
SYN YEE CHIN
No. 18186
Exp. 09/30/2011
ELECTRICAL
STATE OF CALIFORNIA

PB AMERICAS, Inc.
A Parsons Brinckerhoff Company
303 Second St., Suite 700N
San Francisco, CA 94107-1317

The State of California or its officers or agents shall not be responsible for the accuracy or completeness of electronic copies of this plan sheet.

Caltrans now has a web site! To get to the web site, go to http://www.dot.ca.gov

Caltrans Metric

DESIGN OVERSIGHT	CALCULATED/ DESIGNED BY	DATE	REVISED BY	DATE REVISED
BEHZAD GOLEMOHAMMADI	CHECKED BY	01/10	FW	01/10
		SYC		

STATE OF CALIFORNIA - DEPARTMENT OF TRANSPORTATION
Caltrans

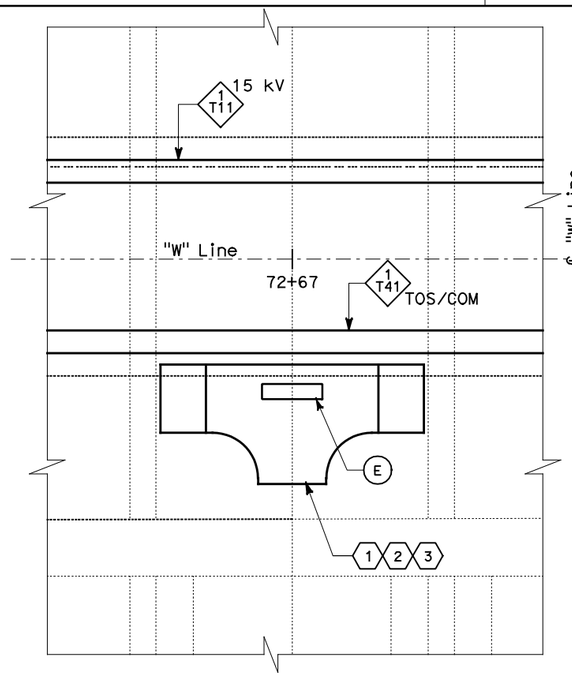

EQUIPMENT SCHEDULE:

- (A) Utility Panel UP-137 100 A, 208/120 V, 3-Phase, 4-Wire
- (B) Controller Cabinet #TOS-15WA
- (C) Telephone Terminal Box #TEL-15W
- (D) Scada Communication Terminal Box #COM-15W
- (E) Fiber Optic Splice Closure #FSC-15W

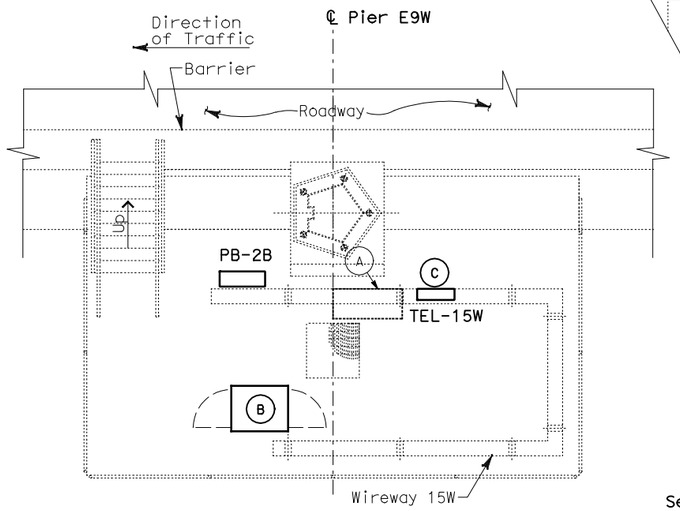

SERVICE PLATFORM #15W EQUIPMENT ARRANGEMENT PLAN

SCALE: 1:40

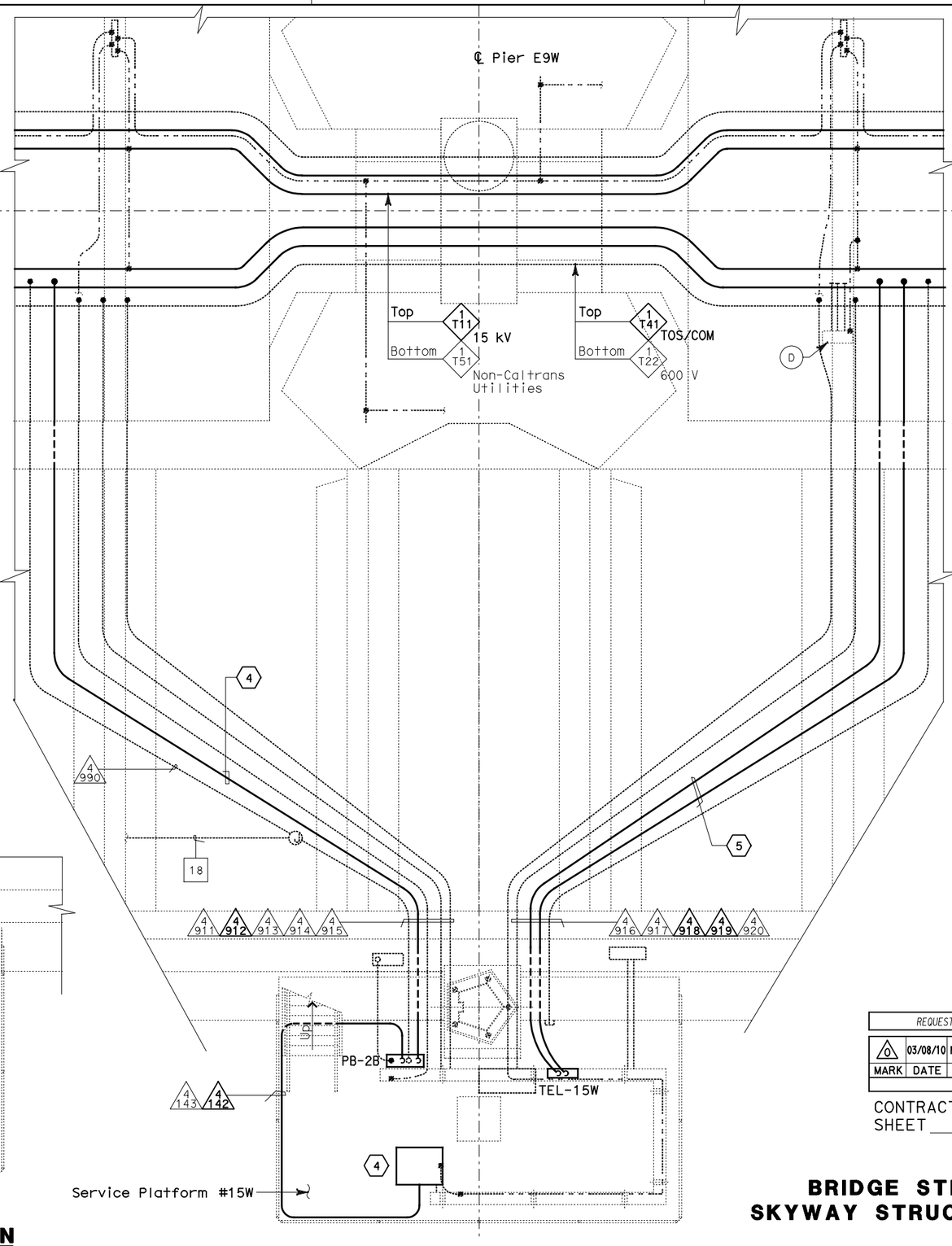

CONDUIT AND GROUNDING PLAN - WB

SCALE: 1:40

NOTES:

1. This plan sheet is a record drawing from Skyway Structures contract. The Contractor shall verify the existing installation. See sheet EE-272 from Skyway Structures, contract No. 04-012024.
2. The installed components shall not be limited to the ones listed below, but shall be a complete installation. For details, see Bridge Structures Girder Westbound, typical Details sheets.
   - Furnish and install the 15kV cables into existing cable tray shown on this drawing. See sheets E-664 and E-665.
   - Furnish and install the TOS fiber optic cables into existing cable tray and conduits shown on this drawing. Pull a 72 fiber in the main tray and terminate in the splice closure. See sheets E-978 through E-981.
   - Inspect for system ground continuity. See sheets E-666 and E-667.
3. All cable trays, conduits and equipment shown on this drawing are existing. Bold ones are to be used for pulling cable.

SHEET NOTES:

1. Furnish and install splice cable tray as shown on sheet E-663, plan detail 2.
2. Mount splice cable tray between diaphragms and secure properly. See sheet E-663, section detail 4.
3. Contractor shall locate the splice cable tray at Station 72+67 as shown on E-608.
4. Furnish and install 12 fiber optic cables from Fiber Optic Splice Closure to Controller Cabinet. Route via pull box PB-2B. Coil 3m of cable inside Controller Cabinet for connections by others. The coiled end of the fiber optic cables shall be terminated with mated connectors. See sheets E-972 and E-973.
5. Pull and terminate 50 pair telephone cable in Telephone Terminal Box. See sheets E-960, E-962 and E-964.

REQUEST FOR INFORMATION NOT ADDRESSED IN THIS CCO REMAIN IN FORCE

MARK	DATE	REVISIONS DESCRIPTIONS	BY	CH'D	CCO#
0	03/08/10	MEP INTEGRATION	SYC	FW	110

CONTRACT CHANGE ORDER NO._____
SHEET_____ OF _____

DETAILS
BRIDGE STRUCTURES GIRDER WESTBOUND
SKYWAY STRUCTURES - SERVICE PLATFORM #15W

SCALE AS NOTED

E-646

THIS PLAN ACCURATE FOR ELECTRICAL WORK ONLY.

ALL DIMENSIONS ARE IN METERS UNLESS OTHERWISE SHOWN

LAST REVISION 00-00-00
DATE PLOTTED => 06-MAY-2010
TIME PLOTTED => 18:07

FOR REDUCED PLANS ORIGINAL SCALE IS IN MILLIMETERS 0 20 40 60 80

DGN FILE =>04-0120f1_E-646.dgn
USERNAME =>llorico

CU 04251

EA 0120F1

DIST	COUNTY	ROUTE	KILOMETER POST TOTAL PROJECT	SHEET No	TOTAL SHEETS
04	SF, Ala	80	12.2/14.3 0.0/4.0	407a 06S48	1204

Synyee Chin 03/08/10
REGISTERED ELECTRICAL ENGINEER DATE

05-06-2010
PLANS APPROVAL DATE

REGISTERED PROFESSIONAL ENGINEER
SYN YEE CHIN
No. 18186
Exp. 09/30/2011
ELECTRICAL
STATE OF CALIFORNIA

PB AMERICAS, Inc.
A Parsons Brinckerhoff Company
303 Second St., Suite 700N
San Francisco, CA 94107-1317

The State of California or its officers or agents shall not be responsible for the accuracy or completeness of electronic copies of this plan sheet.

Caltrans now has a web site! To get to the web site, go to http://www.dot.ca.gov

Caltrans Metric

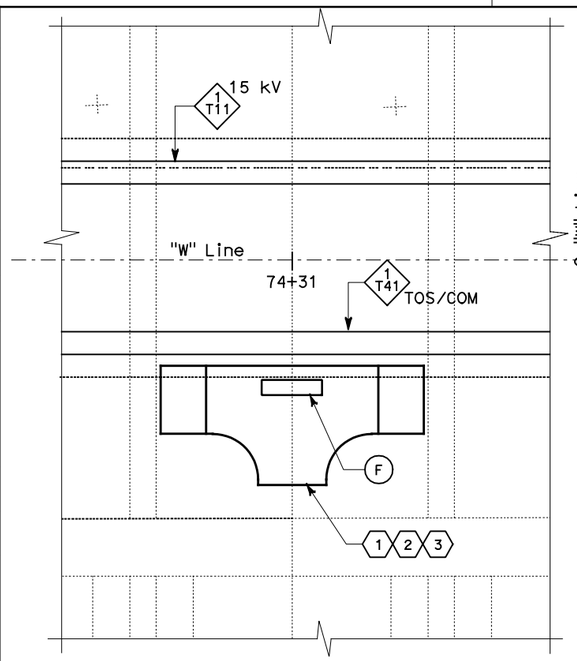

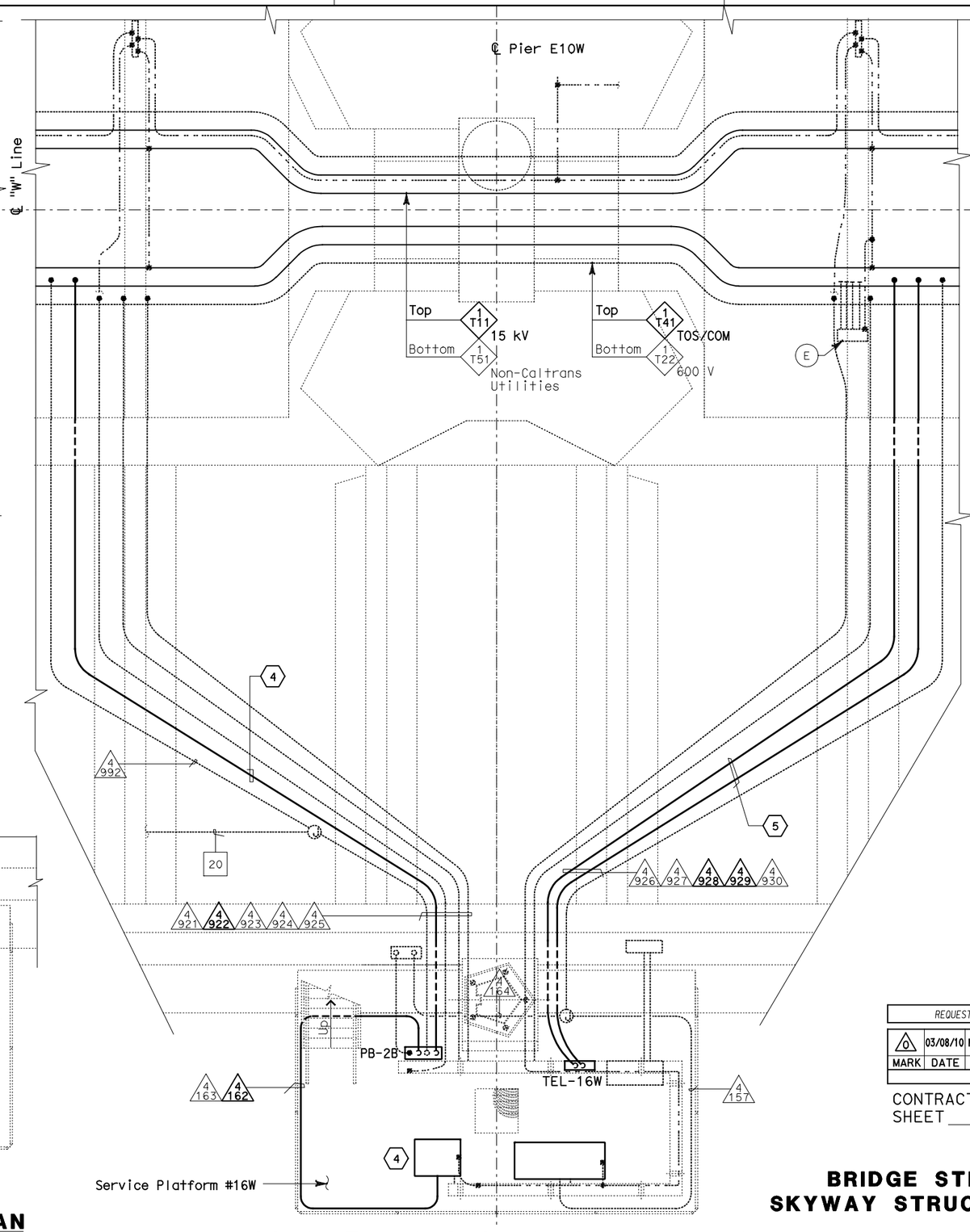

EQUIPMENT SCHEDULE:

- (A) Utility Panel UP-138
  100 A, 208/120 V, 3-Phase, 4-Wire
- (B) Controller Cabinet #TOS-16WA
- (C) Remote Terminal Unit RTU#14W
- (D) Telephone Terminal Box #TEL-16W
- (E) Scada Communication Terminal Box #COM-16W
- (F) Fiber Optic Splice Closure #FSC-16W

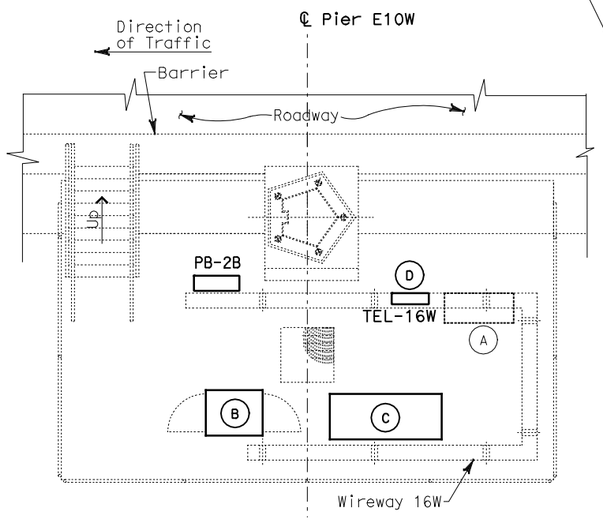

SERVICE PLATFORM #16W EQUIPMENT ARRANGEMENT PLAN

SCALE: 1:40

CONDUIT AND GROUNDING PLAN - WB

SCALE: 1:40

NOTES:

1. This plan sheet is a record drawing from Skyway Structures contract. The Contractor shall verify the existing installation. See sheet EE-273 from Skyway Structures, contract No. 04-012024.
2. The installed components shall not be limited to the ones listed below, but shall be a complete installation. For details, see Bridge Structures Girder Westbound, typical Details sheets.
   - Furnish and install the 15kV cables into existing cable tray shown on this drawing. See sheets E-664 and E-665.
   - Furnish and install the TOS fiber optic cables into existing cable tray and conduits shown on this drawing. Pull a 72 fiber in the main tray and terminate in the splice closure. See sheets E-978 through E-981.
   - Inspect for system ground continuity. See sheets E-666 and E-667.
   - Remote Terminal Unit #14W. See sheets E-931 through E-933.
3. All cable trays, conduits and equipment shown on this drawing are existing. Bold ones are to be used for pulling cable.

SHEET NOTES:

1. Furnish and install splice cable tray as shown on sheet E-663, plan detail 2.
2. Mount splice cable tray between diaphragms and secure properly. See sheet E-663, section detail 4.
3. Contractor shall locate the splice cable tray at Station 74+31 as shown on E-609
4. Furnish and install 12 fiber optic cables from Fiber Optic Splice Closure to Controller Cabinet. Route via pull box PB-2B. Coil 3m of cable inside Controller Cabinet for connections by others. The coiled end of the fiber optic cables shall be terminated with mated connectors. See sheets E-972 and E-973.
5. Pull and terminate 50 pair telephone cable in Telephone Terminal Box. See sheets E-960, E-962 and E-964.

REQUEST FOR INFORMATION NOT ADDRESSED IN THIS CCO REMAIN IN FORCE					
MARK	DATE	REVISIONS DESCRIPTIONS	BY	CH'D	CCO#
0	03/08/10	MEP INTEGRATION	SYC	FW	110

CONTRACT CHANGE ORDER NO. _____
SHEET _____ OF _____

DETAILS
BRIDGE STRUCTURES GIRDER WESTBOUND
SKYWAY STRUCTURES - SERVICE PLATFORM #16W

SCALE AS NOTED

E-647

THIS PLAN ACCURATE FOR ELECTRICAL WORK ONLY.

ALL DIMENSIONS ARE IN METERS UNLESS OTHERWISE SHOWN

FOR REDUCED PLANS ORIGINAL SCALE IS IN MILLIMETERS 0 20 40 60 80

DGN FILE =>04-0120f1_E-647.dgn
USERNAME =>llorico

CU 04251

EA 0120F1

CALCULATED/ DESIGNED BY	CHECKED BY	SYC	DATE 01/10	REVISED BY	DATE REVISED
		FW	01/10		

DESIGN OVERSIGHT BEHZAD GOLEMOHAMMADI

STATE OF CALIFORNIA - DEPARTMENT OF TRANSPORTATION Caltrans

LAST REVISION 00-00-00 DATE PLOTTED => 06-MAY-2010 TIME PLOTTED => 18:07

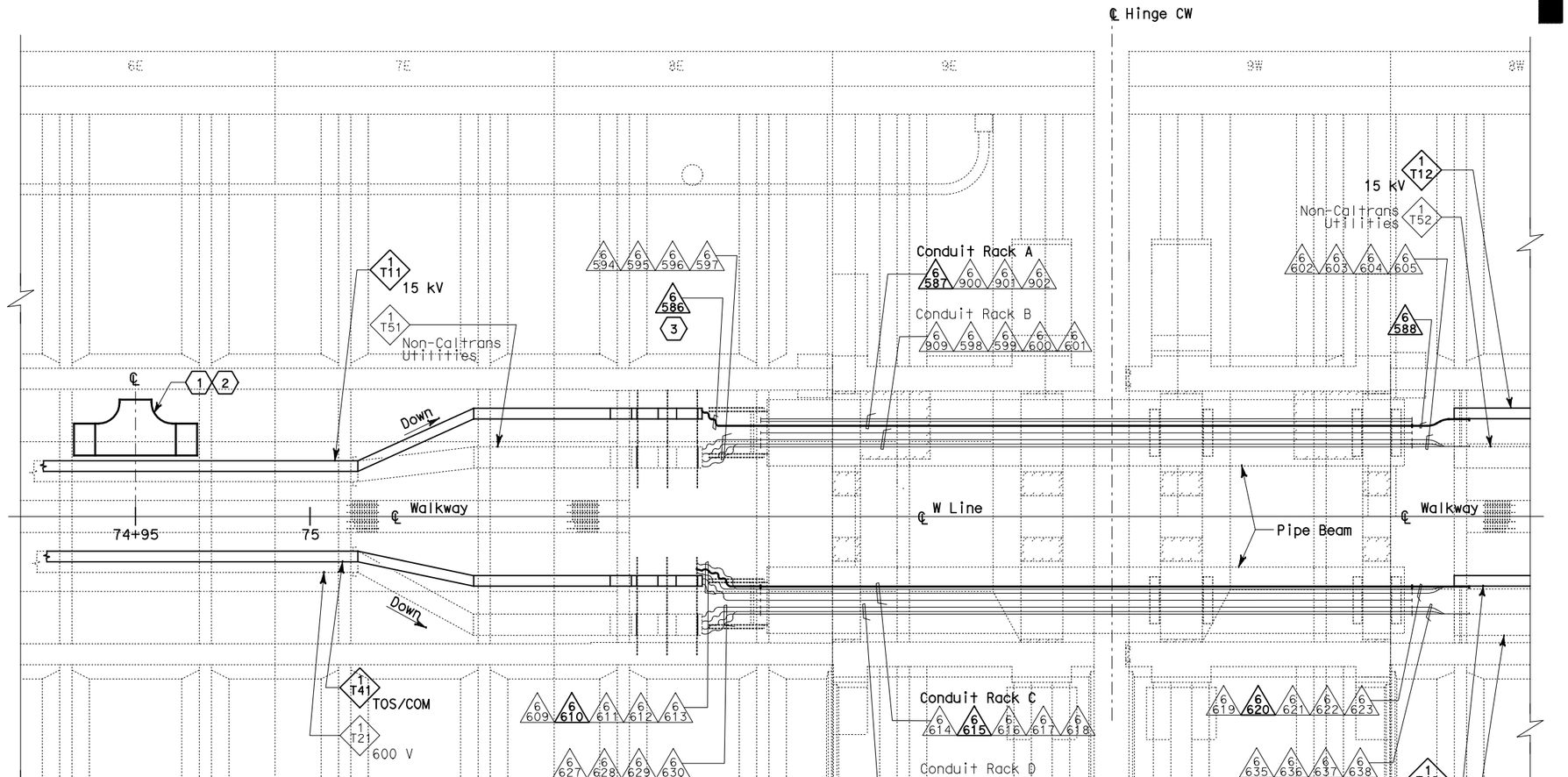

PLAN - HINGE CW

SCALE: 1:75

NOTES:

1. This plan sheet is a record drawing from Skyway Structures contract. The Contractor shall verify the existing installation. See sheet EE-297A from Skyway Structures, contract No. 04-012024.
2. The installed components shall not be limited to the ones listed below, but shall be a complete installation. For details, see Bridge Structures Girder Westbound, typical Details sheets.
   - Furnish and install the 15kV cables into existing cable trays and conduits shown on this drawing. See sheets E-664 and E-665.
   - Furnish and install fiber optic cables into existing cable trays and conduits shown on this drawing. See sheets E-978 through E-981.
   - Inspect for system ground continuity. See sheets E-666 and E-667.
3. All cable trays and conduits shown on this drawing are existing. Bold ones are to be used for pulling cable.

SHEET NOTES:

(1) Furnish and install splice cable tray as shown on sheet E-663, plan detail 1.

(2) Mount splice cable tray between diaphragms at Station 74+95 as shown on sheet E-610, and secure properly. See sheet E-663, section detail 4.

(3) In order to be able to pull the 15kV cable, the Contractor shall disassemble the 15kV flexible conduit installation. The 15kV flexible conduit shall be reinstalled after the 15kV cable has been installed.

REQUEST FOR INFORMATION NOT ADDRESSED IN THIS CCO REMAIN IN FORCE					
MARK	DATE	REVISIONS DESCRIPTIONS	BY	CH'D	CCO#
0	03/08/10	MEP INTEGRATION	SYC	FW	110

CONTRACT CHANGE ORDER NO._____
SHEET _____ OF _____

DETAILS
BRIDGE STRUCTURES GIRDER WESTBOUND
SKYWAY STRUCTURES-HINGE CW

SCALE AS NOTED

E-648

DIST	COUNTY	ROUTE	KILOMETER POST TOTAL PROJECT	SHEET No	TOTAL SHEETS
04	SF, Ala	80	12.2/14.3 0.0/4.0	407a 06S49	1204

Syn Yee Chin 03/08/10
REGISTERED ELECTRICAL ENGINEER DATE

REGISTERED PROFESSIONAL ENGINEER
SYN YEE CHIN
No. 18186
Exp. 09/30/2011
ELECTRICAL
STATE OF CALIFORNIA

PLANS APPROVAL DATE

PB AMERICAS, Inc.
A Parsons Brinckerhoff Company
303 Second St., Suite 700N
San Francisco, CA 94107-1317

The State of California or its officers or agents shall not be responsible for the accuracy or completeness of electronic copies of this plan sheet.

Caltrans now has a web site! To get to the web site, go to http://www.dot.ca.gov

100% SUBMITTAL (03/08/2010)
STATE OF CALIFORNIA - DEPARTMENT OF TRANSPORTATION
Caltrans
DESIGN OVERSIGHT
BEHZAD GOLEMOHAMMADI
CALCULATED/ DESIGNED BY
CHECKED BY
DATE 01/10 SYC
01/10 FW
DATE REVISED
REVISED BY

THIS PLAN ACCURATE FOR ELECTRICAL WORK ONLY.

ALL DIMENSIONS ARE IN METERS UNLESS OTHERWISE SHOWN

FOR REDUCED PLANS ORIGINAL SCALE IS IN MILLIMETERS 0 20 40 60 80

DGN FILE =>04-0120f1_E-648.dgn
USERNAME =>llorico

CU 04251

EA 0120F1

LAST REVISION 00-00-00
DATE PLOTTED => 06-MAY-2010
TIME PLOTTED => 18:07

DIST	COUNTY	ROUTE	KILOMETER POST TOTAL PROJECT	SHEET No	TOTAL SHEETS
04	SF,Ala	80	12.2/14.3 0.0/4.0	407a 06S50	1204

Syn Yee Chin 03/08/10
REGISTERED ELECTRICAL ENGINEER DATE

05-06-2010
PLANS APPROVAL DATE

REGISTERED PROFESSIONAL ENGINEER SYN YEE CHIN No. 18186 Exp. 09/30/2011 ELECTRICAL STATE OF CALIFORNIA

PB AMERICAS, Inc.
A Parsons Brinckerhoff Company
303 Second St., Suite 700N
San Francisco, CA 94107-1317

The State of California or its officers or agents shall not be responsible for the accuracy or completeness of electronic copies of this plan sheet.

Caltrans now has a web site! To get to the web site, go to http://www.dot.ca.gov

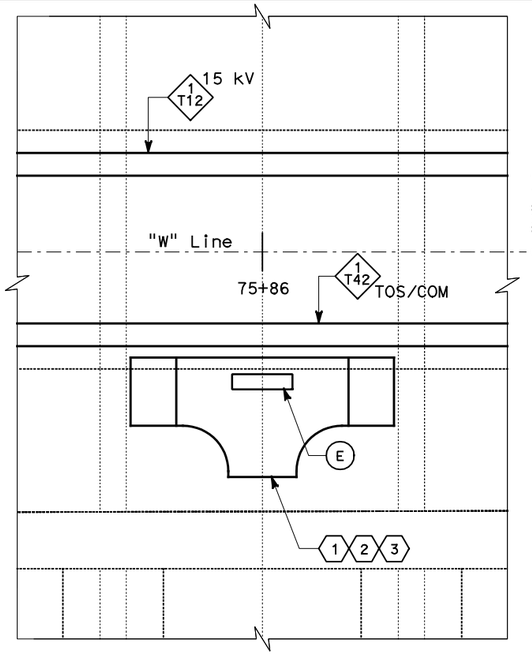

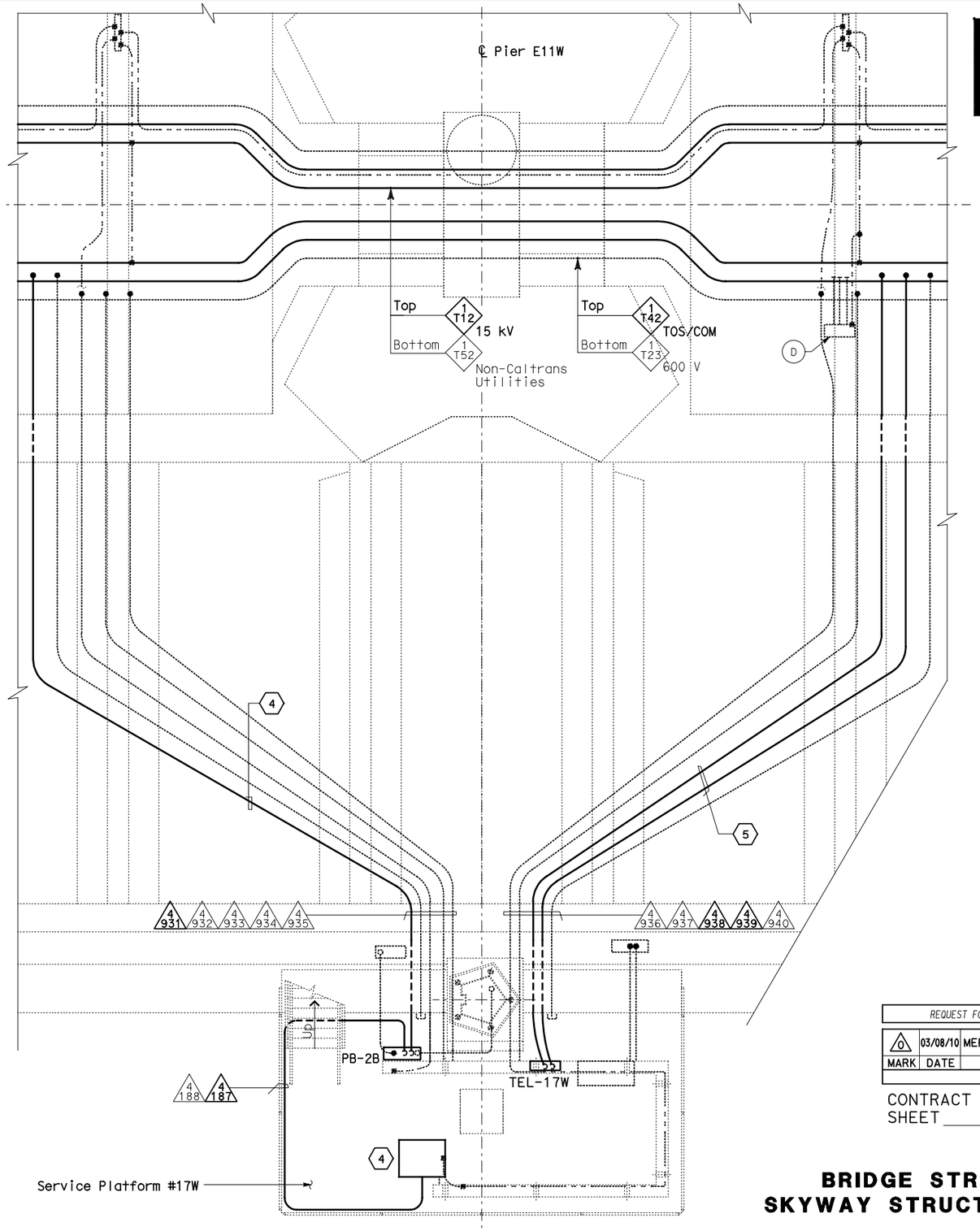

EQUIPMENT SCHEDULE:

- (A) Utility Panel UP-139 100 A, 208/120 V, 3-Phase, 4-Wire
- (B) Controller Cabinet #TOS-17WA
- (C) Telephone Terminal Box #TEL-17W
- (D) Scada Communication Terminal Box #COM-17W
- (E) Fiber Optic Splice Closure #FSC-17W

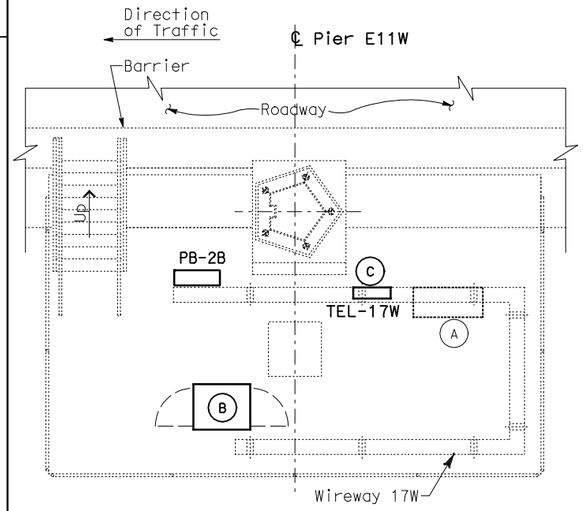

SERVICE PLATFORM #17W EQUIPMENT ARRANGEMENT PLAN

SCALE: 1:40

THIS PLAN ACCURATE FOR ELECTRICAL WORK ONLY.

CONDUIT AND GROUNDING PLAN - WB

SCALE: 1:40

NOTES:

1. This plan sheet is a record drawing from Skyway Structures contract. The Contractor shall verify the existing installation. See sheet EE-274 from Skyway Structures, contract No. 04-012024.
2. The installed components shall not be limited to the ones listed below, but shall be a complete installation. For details, see Bridge Structures Girder Westbound, typical Details sheets.
   - Furnish and install the 15kV cables into existing cable tray shown on this drawing. See sheets E-664 and E-665.
   - Furnish and install the TOS fiber optic cables into existing cable tray and conduits shown on this drawing. Pull a 72 fiber in the main tray and terminate in the splice closure. See sheets E-978 through E-981.
   - Inspect for system ground continuity. See sheets E-666 and E-667.
3. All cable trays, conduits and equipment shown on this drawing are existing. Bold ones are to be used for pulling cable.

SHEET NOTES:

1. Furnish and install splice cable tray as shown on sheet E-663, plan detail 2.
2. Mount splice cable tray between diaphragms and secure properly. See sheet E-663, section detail 4.
3. Contractor shall locate the splice cable tray at Station 75+86 as shown on sheet E-610.
4. Furnish and install 12 fiber optic cables from Fiber Optic Splice Closure to Controller Cabinet. Route via pull box PB-2B. Coil 3m of cable inside Controller Cabinet for connections by others. The coiled end of the fiber optic cables shall be terminated with mated connectors. See sheets E-972 and E-973.
5. Pull and terminate 50 pair telephone cable in Telephone Terminal Box. See sheets E-960, E-962 and E-964.

REQUEST FOR INFORMATION NOT ADDRESSED IN THIS CCO REMAIN IN FORCE

MARK	DATE	DESCRIPTIONS	BY	CH'D	CCO#
0	03/08/10	MEP INTEGRATION	SYC	FW	110

REVISIONS

CONTRACT CHANGE ORDER NO._____
SHEET_____ OF _____

DETAILS
BRIDGE STRUCTURES GIRDER WESTBOUND
SKYWAY STRUCTURES - SERVICE PLATFORM #17W

SCALE AS NOTED

ALL DIMENSIONS ARE IN METERS UNLESS OTHERWISE SHOWN

E-649

STATE OF CALIFORNIA - DEPARTMENT OF TRANSPORTATION
Caltrans

DESIGN OVERSIGHT: BEHZAD GOLEMOHAMMADI
CALCULATED/DESIGNED BY: SYC DATE 01/10
CHECKED BY: FW 01/10
REVISED BY
DATE REVISED

FOR REDUCED PLANS ORIGINAL SCALE IS IN MILLIMETERS 0 20 40 60 80

DGN FILE =>04-0120f1_E-649.dgn
USERNAME =>llorico

CU 04251 EA 0120F1

LAST REVISION 00-00-00
DATE PLOTTED => 06-MAY-2010
TIME PLOTTED => 18:07

DIST	COUNTY	ROUTE	KILOMETER POST TOTAL PROJECT	SHEET No	TOTAL SHEETS
04	SF, Ala	80	12.2/14.3 0.0/4.0	407a 06S51	1204

Syn Yee Chin 03/08/10
REGISTERED ELECTRICAL ENGINEER DATE

05-06-2010
PLANS APPROVAL DATE

REGISTERED PROFESSIONAL ENGINEER
SYN YEE CHIN
No. 18186
Exp. 09/30/2011
ELECTRICAL
STATE OF CALIFORNIA

PB AMERICAS, Inc.
A Parsons Brinckerhoff Company
303 Second St., Suite 700N
San Francisco, CA 94107-1317

The State of California or its officers or agents shall not be responsible for the accuracy or completeness of electronic copies of this plan sheet.

Caltrans now has a web site! To get to the web site, go to http://www.dot.ca.gov

NOTES:

1. This plan sheet is a record drawing from Skyway Structures contract. The Contractor shall verify the existing installation. See sheet EE-275 from Skyway Structures, contract No. 04-012024.
2. The installed components shall not be limited to the ones listed below, but shall be a complete installation. For details, see Bridge Structures Girder Westbound, typical Details sheets.
   - Furnish and install the 15kV cables into existing cable tray shown on this drawing. See sheets E-664 and E-665.
   - Furnish and install the TOS fiber optic cables into existing cable tray and conduits shown on this drawing. Pull a 72 fiber in the main tray and terminate in the splice closure. See sheets E-978 through E-981.
   - Inspect for system ground continuity. See sheets E-666 and E-667.
3. All cable trays, conduits and equipment shown on this drawing are existing. Bold ones are to be used for pulling cable.

SHEET NOTES:

(1) Furnish and install splice cable tray as shown on sheet E-663, plan detail 2.

(2) Mount splice cable tray between diaphragms and secure properly. See sheet E-663, section detail 4.

(3) Contractor shall locate the splice cable tray at Station 77+47 as shown on sheet E-612.

(4) Furnish and install 12 fiber optic cables from Fiber Optic Splice Closure to Controller Cabinet. Route via pull box PB-2B. Coil 3m of cable inside Controller Cabinet for connections by others. The coiled end of the fiber optic cables shall be terminated with mated connectors. See sheets E-972 and E-973.

(5) Pull and terminate 50 pair telephone cable in Telephone Terminal Box. See sheets E-960, E-962 and E-964.

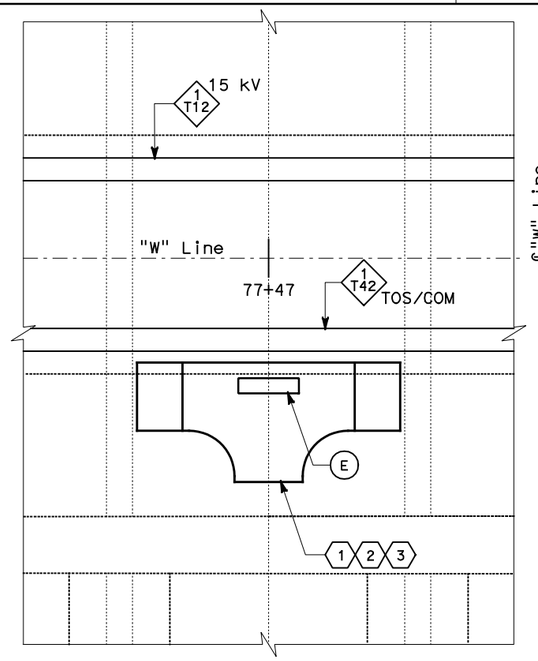

EQUIPMENT SCHEDULE:

- (A) Utility Panel UP-140
  100 A, 208/120 V, 3-Phase, 4-Wire
- (B) Controller Cabinet #TOS-18WA
- (C) Telephone Terminal Box #TEL-18W
- (D) Scada Communication Terminal Box #COM-18W
- (E) Fiber Optic Splice Closure #FSC-18W

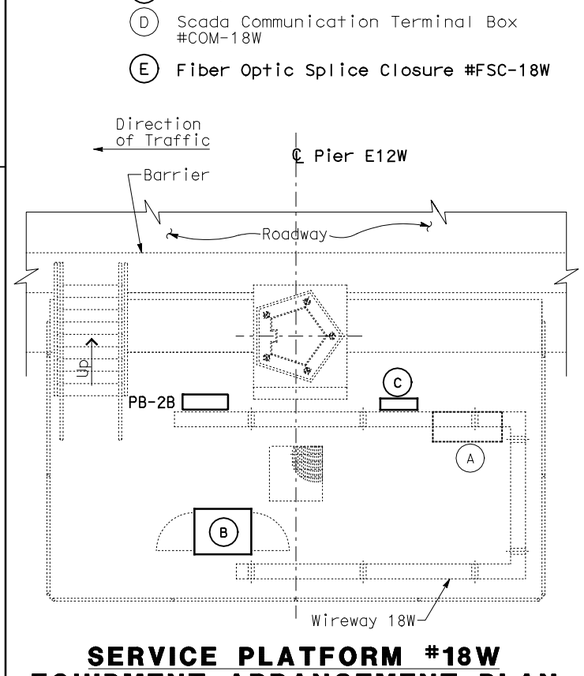

SERVICE PLATFORM #18W EQUIPMENT ARRANGEMENT PLAN

SCALE: 1:40

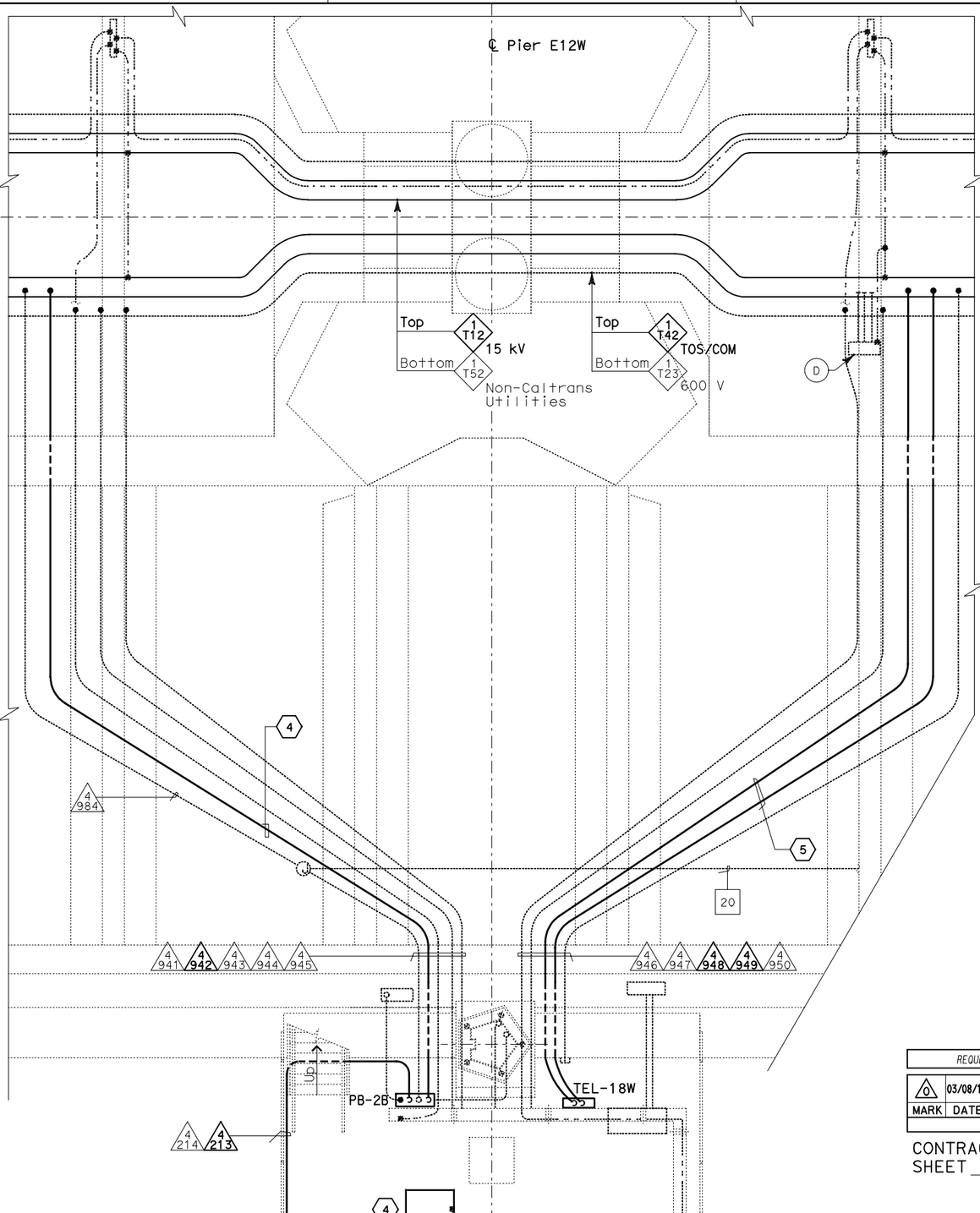

CONDUIT AND GROUNDING PLAN - WB

SCALE: 1:40

REQUEST FOR INFORMATION NOT ADDRESSED IN THIS CCO REMAIN IN FORCE					
MARK	DATE	REVISIONS DESCRIPTIONS	BY	CH'D	CCO#
0	03/08/10	MEP INTEGRATION	SYC	FW	110

CONTRACT CHANGE ORDER NO._____
SHEET _____ OF _____

DETAILS
BRIDGE STRUCTURES GIRDER WESTBOUND
SKYWAY STRUCTURES-SERVICE PLATFORM #18W

SCALE AS NOTED

E-650

THIS PLAN ACCURATE FOR ELECTRICAL WORK ONLY.

ALL DIMENSIONS ARE IN METERS UNLESS OTHERWISE SHOWN

CALCULATED/ DESIGNED BY	DATE	REVISED BY	DATE REVISED
CHECKED BY	SYC 01/10	FW	01/10

DESIGN OVERSIGHT
BEHZAD GOLEMOHAMMADI

STATE OF CALIFORNIA - DEPARTMENT OF TRANSPORTATION
Caltrans

LAST REVISION 00-00-00
DATE PLOTTED => 06-MAY-2010
TIME PLOTTED => 18:07

FOR REDUCED PLANS ORIGINAL SCALE IS IN MILLIMETERS 0 20 40 60 80

DGN FILE =>04-0120f1_E-650.dgn
USERNAME =>llorico

CU 04251

EA 0120F1

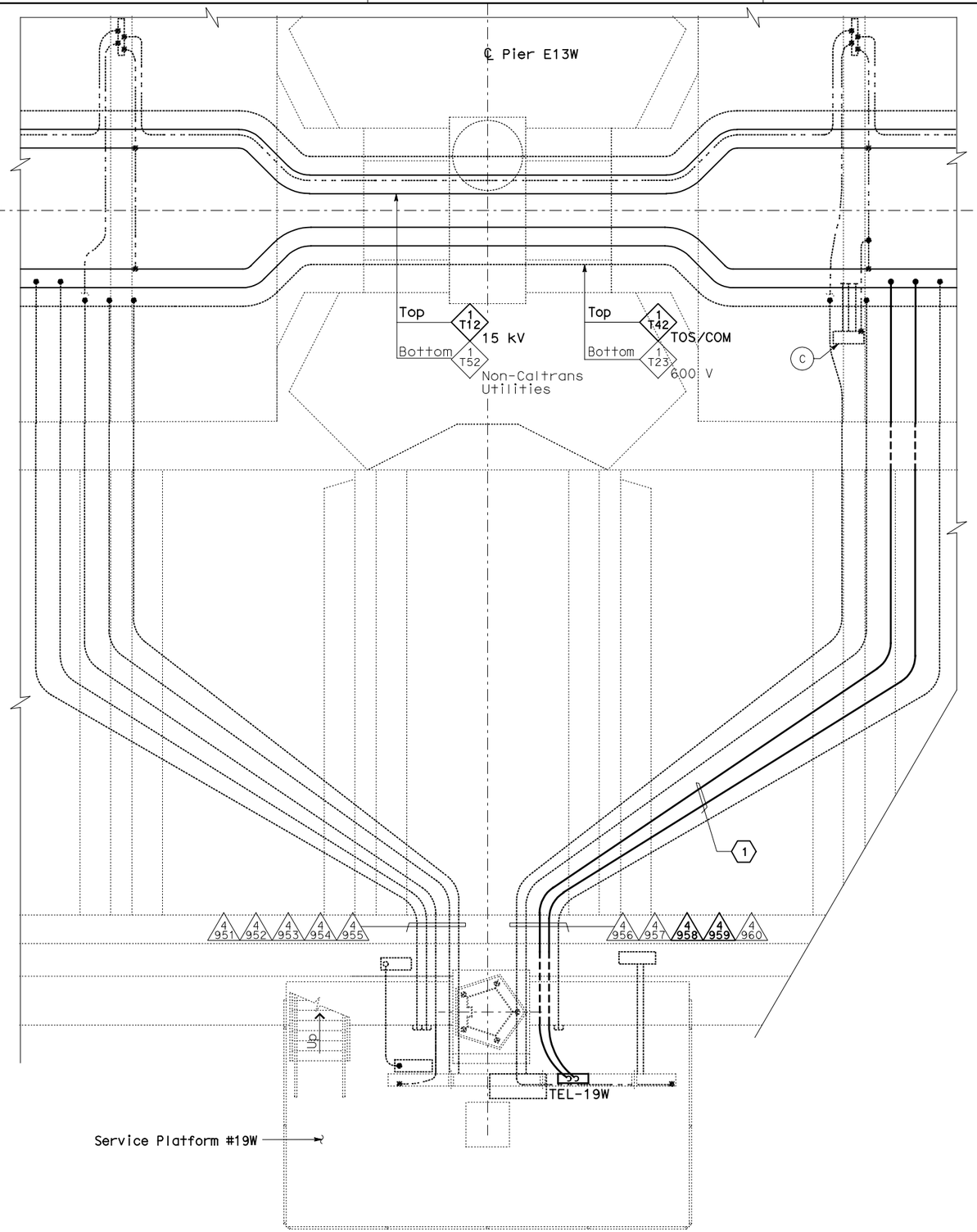

CONDUIT AND GROUNDING PLAN - WB

SCALE: 1:40

THIS PLAN ACCURATE FOR ELECTRICAL WORK ONLY.

EQUIPMENT SCHEDULE:

(A) Utility Panel UP-141
100 A, 208/120 V, 3-Phase, 4-Wire

(B) Telephone Terminal Box #TEL-19W

(C) Scada Communication Terminal Box #COM-19W

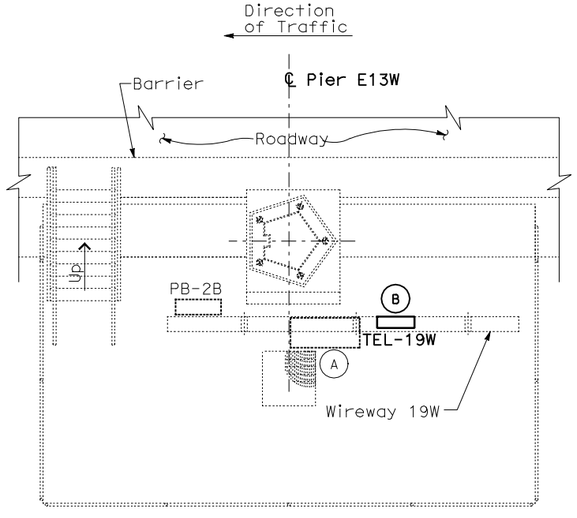

SERVICE PLATFORM #19W EQUIPMENT ARRANGEMENT PLAN

SCALE: 1:40

NOTES:

1. This plan sheet is a record drawing from Skyway Structures contract. The Contractor shall verify the existing installation. See sheet EE-276 from Skyway Structures, contract No. 04-012024.
2. The installed components shall not be limited to the ones listed below, but shall be a complete installation. For details, see Bridge Structures Girder Westbound, typical Details sheets.
   - Furnish and install the 15kV cables into existing cable tray shown on this drawing. See sheets E-664 and E-665.
   - Furnish and install the TOS fiber optic cables into existing cable tray shown on this drawing. See sheets E-978 through E-981.
   - Inspect for system ground continuity. See sheets E-666 and E-667.
3. All cable trays, conduits and equipment shown on this drawing are existing. Bold ones are to be used for pulling cable.

SHEET NOTES:

(1) Pull and terminate 50 pair telephone cable in Telephone Terminal Box. See sheets E-960, E-962 and E-964.

DIST	COUNTY	ROUTE	KILOMETER POST TOTAL PROJECT	SHEET No	TOTAL SHEETS
04	SF,Ala	80	12.2/14.3 0.0/4.0	407a 06S52	1204

Syn Yee Chin 03/08/10
REGISTERED ELECTRICAL ENGINEER DATE

05-06-2010
PLANS APPROVAL DATE

REGISTERED PROFESSIONAL ENGINEER — SYN YEE CHIN No. 18186 Exp. 09/30/2011 ELECTRICAL — STATE OF CALIFORNIA

PB AMERICAS, Inc.
A Parsons Brinckerhoff Company
303 Second St., Suite 700N
San Francisco, CA 94107-1317

The State of California or its officers or agents shall not be responsible for the accuracy or completeness of electronic copies of this plan sheet.

Caltrans now has a web site! To get to the web site, go to http://www.dot.ca.gov

MARK	DATE	REVISIONS	BY	CH'D	CCO#
0	03/08/10	MEP INTEGRATION	SYC	FW	110

REQUEST FOR INFORMATION NOT ADDRESSED IN THIS CCO REMAIN IN FORCE

CONTRACT CHANGE ORDER NO._____
SHEET _____ OF _____

DETAILS
BRIDGE STRUCTURES GIRDER WESTBOUND
SKYWAY STRUCTURES - SERVICE PLATFORM #19W

SCALE AS NOTED

E-651

ALL DIMENSIONS ARE IN METERS UNLESS OTHERWISE SHOWN

FOR REDUCED PLANS ORIGINAL SCALE IS IN MILLIMETERS 0 20 40 60 80

DGN FILE =>04-0120f1_E-651.dgn
USERNAME =>llorico

CU 04251

EA 0120F1

DESIGN OVERSIGHT
BEHZAD GOLEMOHAMMADI

STATE OF CALIFORNIA - DEPARTMENT OF TRANSPORTATION
Caltrans

	CALCULATED/ DESIGNED BY	CHECKED BY
SYC	FW	
DATE 01/10	01/10	
REVISED BY	DATE REVISED	

LAST REVISION 00-00-00
DATE PLOTTED => 06-MAY-2010
TIME PLOTTED => 18:07

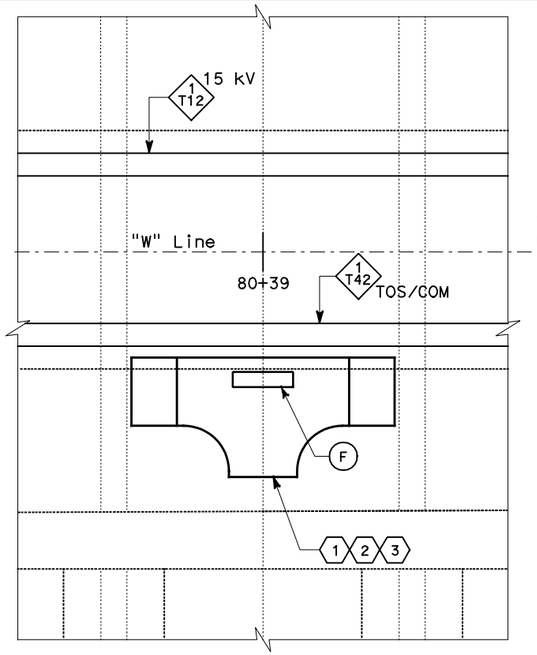

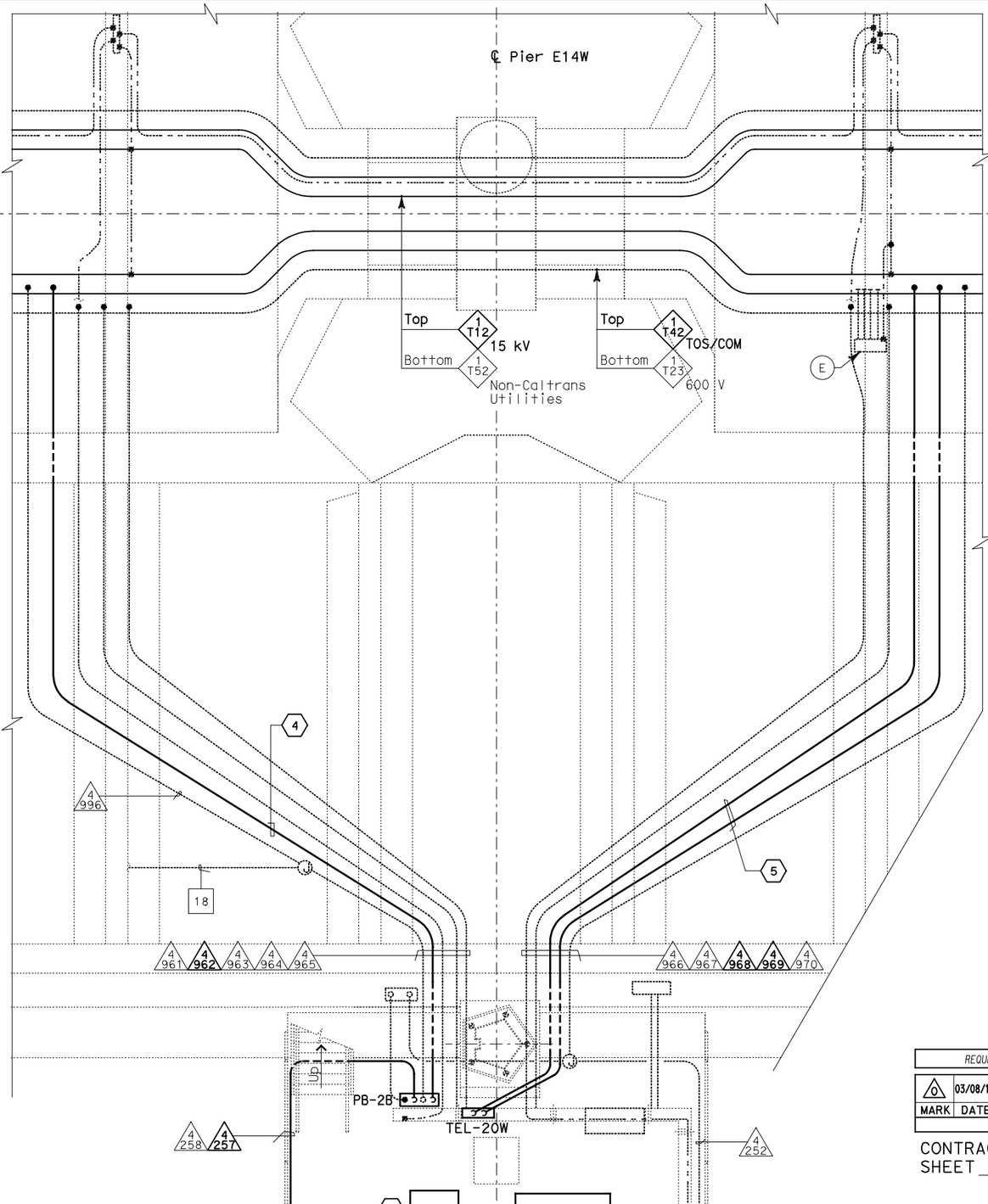

EQUIPMENT SCHEDULE:

- (A) Utility Panel UP-142
  100 A, 208/120 V, 3-Phase, 4-Wire
- (B) Controller Cabinet #TOS-20WA
- (C) Remote Terminal Unit RTU#15W
- (D) Telephone Terminal Box #TEL-20W
- (E) Scada Communication Terminal Box #COM-20W
- (F) Fiber Optic Splice Closure #FSC-20W

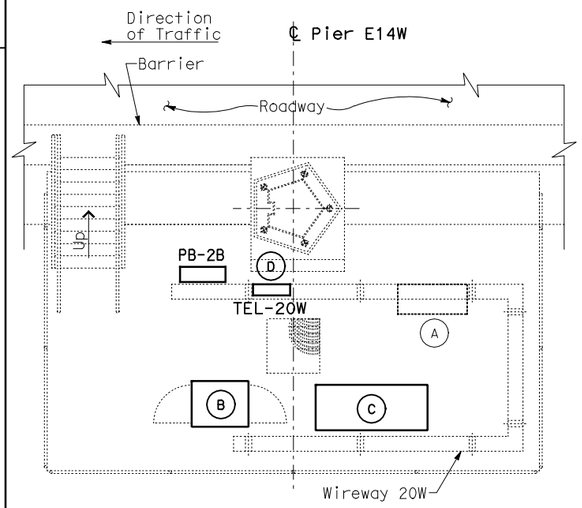

SERVICE PLATFORM #20W
EQUIPMENT ARRANGEMENT PLAN

SCALE: 1:40

THIS PLAN ACCURATE FOR ELECTRICAL WORK ONLY.

CONDUIT AND GROUNDING PLAN - WB

SCALE: 1:40

ALL DIMENSIONS ARE IN METERS UNLESS OTHERWISE SHOWN

DIST	COUNTY	ROUTE	KILOMETER POST TOTAL PROJECT	SHEET No	TOTAL SHEETS
04	SF, Ala	80	12.2/14.3 0.0/4.0	407a 06S53	1204

Syn Yee Chin 03/08/10
REGISTERED ELECTRICAL ENGINEER DATE

05-06-2010
PLANS APPROVAL DATE

REGISTERED PROFESSIONAL ENGINEER
SYN YEE CHIN
No. 18186
Exp. 09/30/2011
ELECTRICAL
STATE OF CALIFORNIA

PB AMERICAS, Inc.
A Parsons Brinckerhoff Company
303 Second St., Suite 700N
San Francisco, CA 94107-1317

The State of California or its officers or agents shall not be responsible for the accuracy or completeness of electronic copies of this plan sheet.

Caltrans now has a web site! To get to the web site, go to http://www.dot.ca.gov

NOTES:

1. This plan sheet is a record drawing from Skyway Structures contract. The Contractor shall verify the existing installation. See sheet EE-277 from Skyway Structures, contract No. 04-012024.
2. The installed components shall not be limited to the ones listed below, but shall be a complete installation. For details, see Bridge Structures Girder Westbound, typical Details sheets.
   - Furnish and install the 15kV cables into existing cable tray shown on this drawing. See sheets E-664 and E-665.
   - Furnish and install the TOS fiber optic cables into existing cable tray and conduits shown on this drawing. Pull a 72 fiber in the main tray and terminate in the splice closure. See sheets E-978 through E-981.
   - Inspect for system ground continuity. See sheets E-666 and E-667
   - Remote Terminal Unit #15W. See sheets E-902, E-931, E-936 and E-937.
3. All cable trays, conduits and equipment shown on this drawing are existing. Bold ones are to be used for pulling cable.

SHEET NOTES:

1. Furnish and install splice cable tray as shown on sheet E-663, plan detail 2.
2. Mount splice cable tray between diaphragms and secure properly. See sheet E-663, section detail 4.
3. Contractor shall locate the splice cable tray at Station 80+39 as shown on sheet E-614.
4. Furnish and install 12 fiber optic cables from Fiber Optic Splice Closure to Controller Cabinet. Route via pull box PB-2B. Coil 3m of cable inside Controller Cabinet for connections by others. The coiled end of the fiber optic cables shall be terminated with mated connectors. See sheets E-972 and E-973.
5. Pull and terminate 50 pair telephone cable in Telephone Terminal Box. See sheets E-960, E-962 and E-964.

REQUEST FOR INFORMATION NOT ADDRESSED IN THIS CCO REMAIN IN FORCE					
MARK	DATE	REVISIONS DESCRIPTIONS	BY	CH'D	CCO#
0	03/08/10	MEP INTEGRATION	SYC	FW	110

CONTRACT CHANGE ORDER NO. _____
SHEET _____ OF _____

DETAILS
BRIDGE STRUCTURES GIRDER WESTBOUND
SKYWAY STRUCTURES-SERVICE PLATFORM #20W

SCALE AS NOTED

E-652

CALCULATED/ DESIGNED BY	CHECKED BY	SYC	DATE 01/10	REVISED BY	DATE REVISED
BEHZAD GOLEMOHAMMADI		FW	01/10		

DESIGN OVERSIGHT

STATE OF CALIFORNIA - DEPARTMENT OF TRANSPORTATION
Caltrans

LAST REVISION 00-00-00 | DATE PLOTTED => 06-MAY-2010 | TIME PLOTTED => 18:07

FOR REDUCED PLANS ORIGINAL SCALE IS IN MILLIMETERS 0 20 40 60 80

DGN FILE =>04-0120f1_E-652.dgn
USERNAME =>llorico

CU 04251 | EA 0120F1

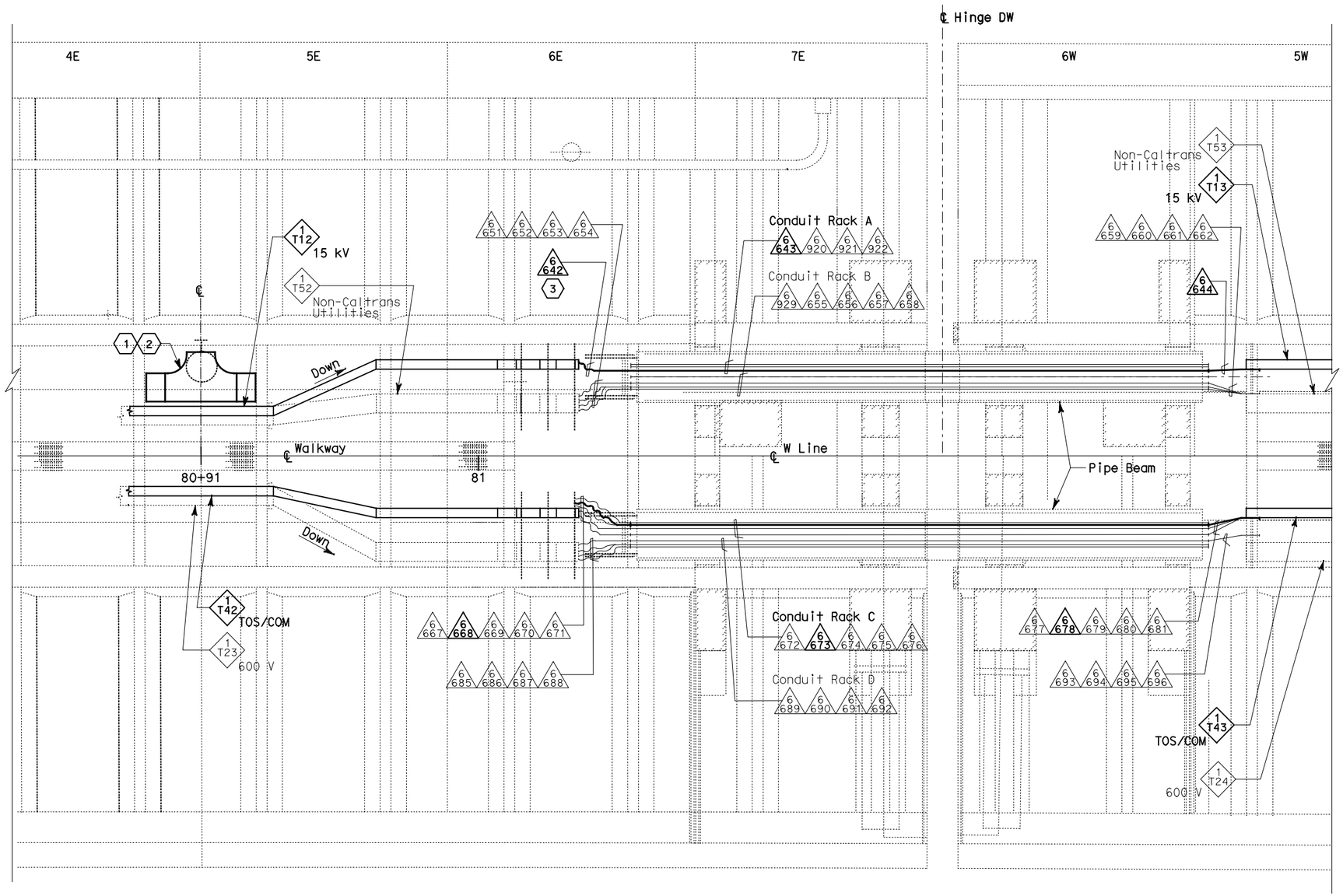

PLAN - HINGE DW

SCALE: 1:75

NOTES:

1. This plan sheet is a record drawing from Skyway Structures contract. The Contractor shall verify the existing installation. See sheet EE-298A from Skyway Structures, contract No. 04-012024.
2. The installed components shall not be limited to the ones listed below, but shall be a complete installation. For details, see Bridge Structures Girder Westbound, typical Details sheets.
   - Furnish and install the 15kV cables into existing cable trays and conduits shown on this drawing. See sheets E-664 and E-665.
   - Furnish and install fiber optic cables into existing cable trays and conduits shown on this drawing. See sheets E-978 through E-981.
   - Inspect for system ground continuity. See sheets E-666 and E-667.
3. All cable trays and conduits shown on this drawing are existing. Bold ones are to be used for pulling cable.

SHEET NOTES:

(1) Furnish and install splice cable tray as shown on sheet E-663, plan detail 1.

(2) Mount splice cable tray between diaphragms at Station 80+91 as shown on sheet E-614, and secure properly. See sheet E-663, section detail 4.

(3) In order to be able to pull the 15kV cable, the Contractor shall disassemble the 15kV flexible conduit installation. The 15kV flexible conduit shall be reinstalled after the 15kV cable has been installed.

REQUEST FOR INFORMATION NOT ADDRESSED IN THIS CCO REMAIN IN FORCE

MARK	DATE	DESCRIPTIONS	BY	CH'D	CCO#
		REVISIONS			
0	03/08/10	MEP INTEGRATION	SYC	FW	110

CONTRACT CHANGE ORDER NO._____
SHEET_____OF_____

DETAILS
BRIDGE STRUCTURES GIRDER WESTBOUND
SKYWAY STRUCTURES-HINGE DW

SCALE AS NOTED

E-653

THIS PLAN ACCURATE FOR ELECTRICAL WORK ONLY.

ALL DIMENSIONS ARE IN METERS UNLESS OTHERWISE SHOWN

FOR REDUCED PLANS ORIGINAL SCALE IS IN MILLIMETERS 0 20 40 60 80

DGN FILE =>04-0120f1_E-653.dgn
USERNAME =>llorico

CU 04251 | EA 0120F1

DIST	COUNTY	ROUTE	KILOMETER POST TOTAL PROJECT	SHEET No	TOTAL SHEETS
04	SF,Ala	80	12.2/14.3 0.0/4.0	407a 06S54	1204

Syn Yee Chin 03/08/10
REGISTERED ELECTRICAL ENGINEER DATE

REGISTERED PROFESSIONAL ENGINEER — SYN YEE CHIN No. 18186 Exp. 09/30/2011 ELECTRICAL — STATE OF CALIFORNIA

05-06-2010
PLANS APPROVAL DATE

PB AMERICAS, Inc.
A Parsons Brinckerhoff Company
303 Second St., Suite 700N
San Francisco, CA 94107-1317

The State of California or its officers or agents shall not be responsible for the accuracy or completeness of electronic copies of this plan sheet.

Caltrans now has a web site! To get to the web site, go to http://www.dot.ca.gov

Caltrans Metric

DESIGN OVERSIGHT
BEHZAD GOLEMOHAMMADI

STATE OF CALIFORNIA - DEPARTMENT OF TRANSPORTATION
Caltrans

REVISED BY	DATE REVISED	CALCULATED/ DESIGNED BY	CHECKED BY
SYC	01/10	FW	01/10

LAST REVISION 00-00-00
DATE PLOTTED => 06-MAY-2010
TIME PLOTTED => 18:08

DIST	COUNTY	ROUTE	KILOMETER POST TOTAL PROJECT	SHEET No	TOTAL SHEETS
04	SF, Ala	80	12.2/14.3 0.0/4.0	407a 06S55	1204

Syn Yee Chin 03/08/10
REGISTERED ELECTRICAL ENGINEER DATE

REGISTERED PROFESSIONAL ENGINEER
SYN YEE CHIN
No. 18186
Exp. 09/30/2011
ELECTRICAL
STATE OF CALIFORNIA

05-06-2010
PLANS APPROVAL DATE

PB AMERICAS, Inc.
A Parsons Brinckerhoff Company
303 Second St., Suite 700N
San Francisco, CA 94107-1317

The State of California or its officers or agents shall not be responsible for the accuracy or completeness of electronic copies of this plan sheet.

Caltrans now has a web site! To get to the web site, go to http://www.dot.ca.gov

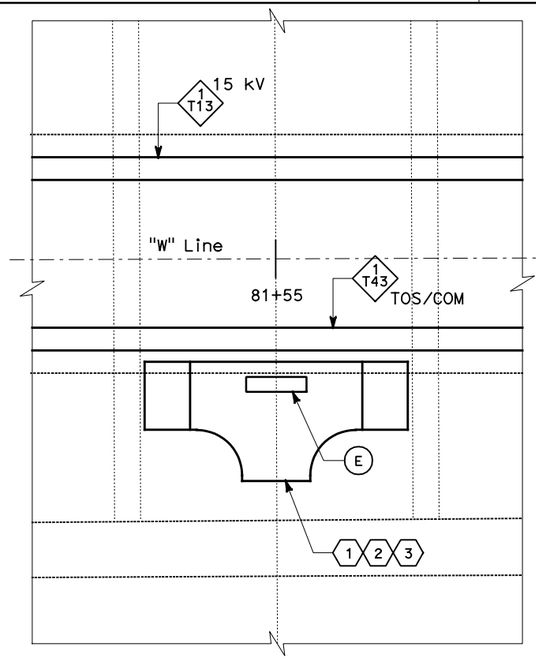

EQUIPMENT SCHEDULE:

- (A) Utility Panel UP-143
  100 A, 208/120 V, 3-Phase, 4-Wire
- (B) Controller Cabinet #TOS-21WA
- (C) Telephone Terminal Box #TEL-21W
- (D) Scada Communication Terminal Box #COM-21W
- (E) Fiber Optic Splice Closure #FSC-21W

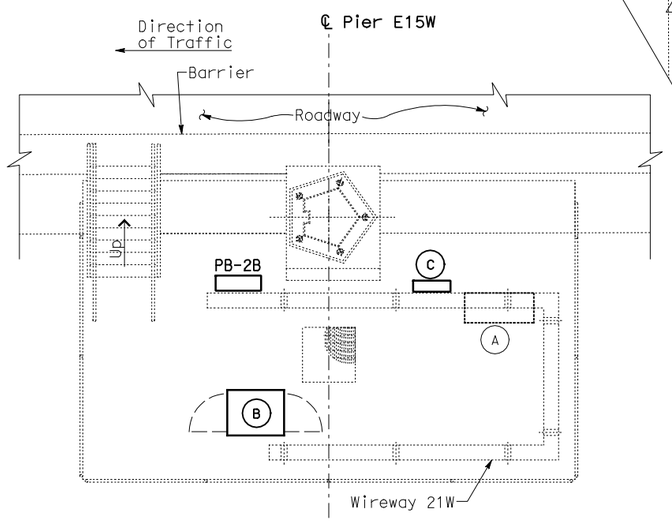

SERVICE PLATFORM #21W EQUIPMENT ARRANGEMENT PLAN

SCALE: 1:40

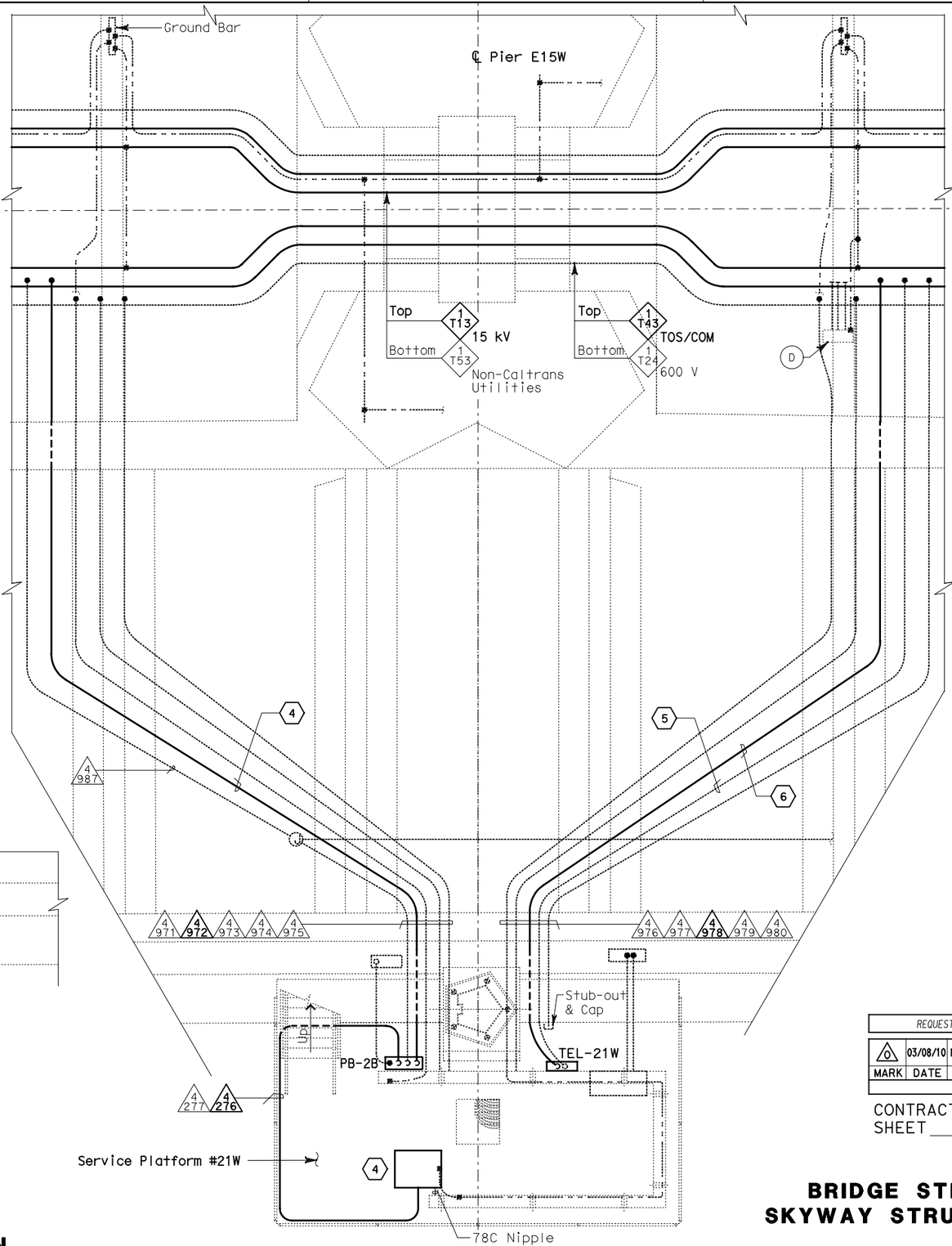

CONDUIT AND GROUNDING PLAN - WB

SCALE: 1:40

NOTES:

1. This plan sheet is a record drawing from Skyway Structures contract. The Contractor shall verify the existing installation. See sheet EE-278 from Skyway Structures, contract No. 04-012024.
2. The installed components shall not be limited to the ones listed below, but shall be a complete installation. For details, see Bridge Structures Girder Westbound, typical Details sheets.
   - Furnish and install the 15kV cables into existing cable tray shown on this drawing. See sheets E-664 and E-665.
   - Furnish and install the TOS fiber optic cables into existing cable tray and conduit shown on this drawing. Pull a 72 fiber in the main tray and terminate in the splice closure. See sheets E-978 through E-981.
   - Inspect for system ground continuity. See sheets E-666 and E-667.
3. All cable trays, conduits and equipment shown on this drawing are existing. Bold ones are to be used for pulling cable.

SHEET NOTES:

1. Furnish and install splice cable tray as shown on sheet E-663, plan detail 2.
2. Mount splice cable tray between diaphragms and secure properly. See sheet E-663, section detail 4.
3. Contractor shall locate the splice cable tray at Station 81+55 as shown on sheet E-615.
4. Furnish and install 12 fiber optic cables from Fiber Optic Splice Closure to Controller Cabinet. Route via pull box PB-2B. Coil 3m of cable inside Controller Cabinet for connections by others. The coiled end of the fiber optic cables shall be terminated with mated connectors. See sheets E-972 and E-973.
5. Pulling and termination of cables by others.
6. Pull and terminate 50 pair telephone cable in Telephone Terminal Box. See sheets E-960, E-962 and E-964.

REQUEST FOR INFORMATION NOT ADDRESSED IN THIS CCO REMAIN IN FORCE

MARK	DATE	DESCRIPTIONS	BY	CH'D	CCO#
		REVISIONS			
0	03/08/10	MEP INTEGRATION	SYC	FW	110

CONTRACT CHANGE ORDER NO._____
SHEET _____ OF _____

DETAILS
BRIDGE STRUCTURES GIRDER WESTBOUND
SKYWAY STRUCTURES-SERVICE PLATFORM #21W

SCALE AS NOTED

E-654

CALCULATED/ DESIGNED BY	CHECKED BY
SYC	FW
DATE 01/10	01/10
REVISED BY	DATE REVISED

DESIGN OVERSIGHT
BEHZAD GOLEMOHAMMADI

STATE OF CALIFORNIA - DEPARTMENT OF TRANSPORTATION
Caltrans

LAST REVISION 00-00-00
DATE PLOTTED => 06-MAY-2010
TIME PLOTTED => 18:08

THIS PLAN ACCURATE FOR ELECTRICAL WORK ONLY.

ALL DIMENSIONS ARE IN METERS UNLESS OTHERWISE SHOWN

FOR REDUCED PLANS ORIGINAL SCALE IS IN MILLIMETERS 0 20 40 60 80

DGN FILE =>04-0120f1_E-654.dgn
USERNAME =>llorico

CU 04251

EA 0120F1

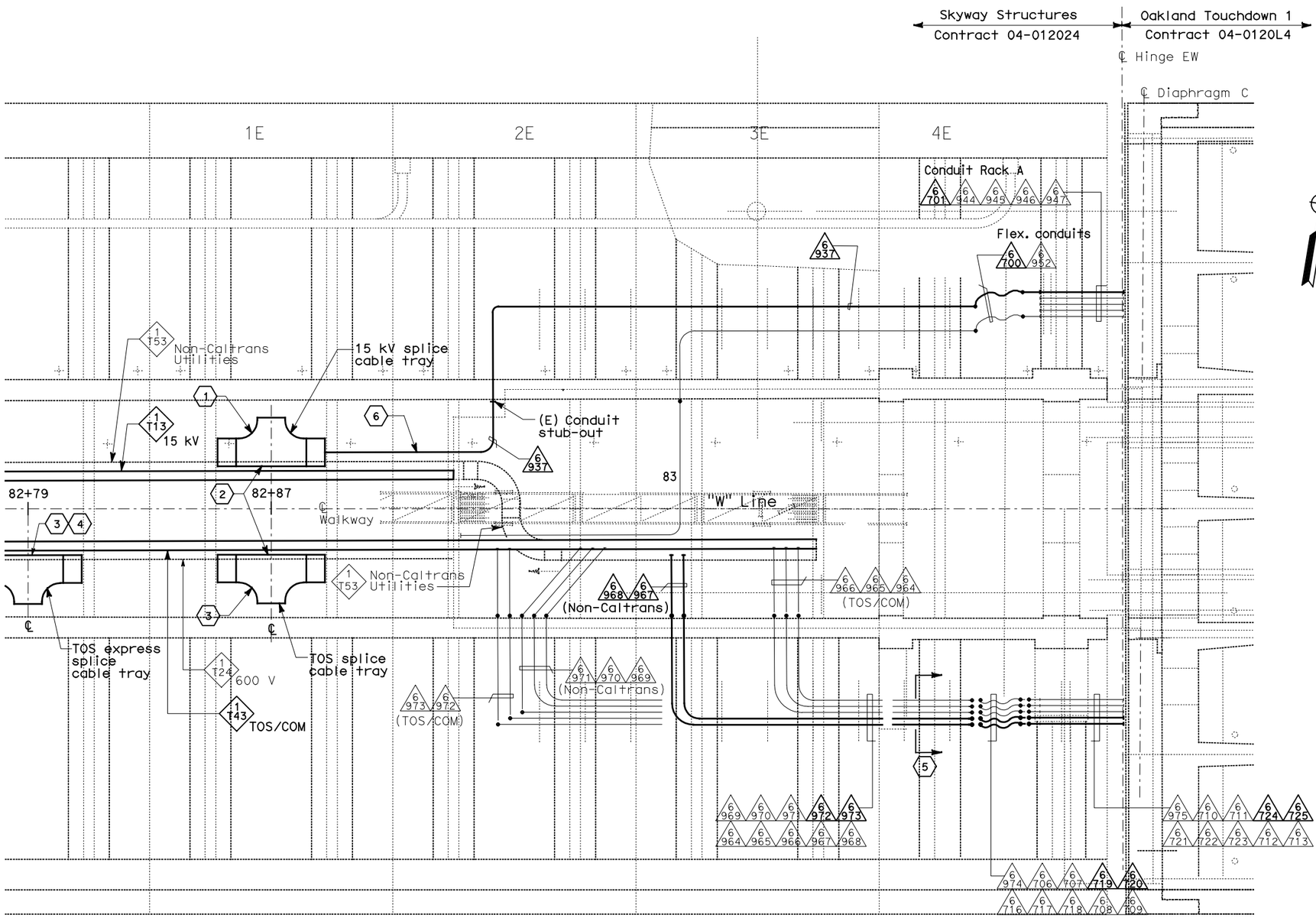

PLAN - HINGE EW

SCALE 1:75

DIST	COUNTY	ROUTE	KILOMETER POST TOTAL PROJECT	SHEET No	TOTAL SHEETS
04	SF, Ala	80	12.2/14.3 0.0/4.0	407a 06S56	1204

Syn Yee Chin 03/08/10
REGISTERED ELECTRICAL ENGINEER DATE

SYN YEE CHIN No. 18186 Exp. 09/30/2011 ELECTRICAL — REGISTERED PROFESSIONAL ENGINEER — STATE OF CALIFORNIA

05-06-2010
PLANS APPROVAL DATE

PB AMERICAS, Inc.
A Parsons Brinckerhoff Company
303 Second St., Suite 700N
San Francisco, CA 94107-1317

The State of California or its officers or agents shall not be responsible for the accuracy or completeness of electronic copies of this plan sheet.

Caltrans now has a web site! To get to the web site, go to http://www.dot.ca.gov

NOTES:

1. This plan sheet is a record drawing from Oakland Touchdown 1 contract. The Contractor shall verify the existing installation. See sheet E-23 from Oakland Touchdown 1, contract No. 04-0120L4.
2. The installed components shall not be limited to the ones listed below, but shall be a complete installation. For details, see Bridge Structures Girder Westbound, typical Details sheets.
   - Furnish and install 15kV cables into existing cable trays and conduits shown on this drawing. See sheets E-664 and E-665.
   - Furnish and install TOS fiber optic cables into existing cable trays and conduits shown on this drawing. See sheets E-978 through E-981.
   - Inspect for system ground continuity. See sheets E-666 and E-667.
3. All cable trays and conduits shown on this drawing are existing. Bold ones are to be used for pulling cable.

SHEET NOTES:

1. Furnish and install splice cable tray as shown on sheet E-663A, Detail 7.
2. Mount splice cable tray between diaphragms at Station 82+87 as shown on E-616 and secure properly. See sheet E-663, section detail 4.
3. Furnish and install splice cable tray as shown on sheet E-663, plan detail 2.
4. Mount splice cable tray between diaphragms at Station 82+79 as shown on E-616 and secure properly. See sheet E-663, Section detail 4.
5. Cross section reference for conduit configuration.
6. Extend from stub-out to splice cable tray, see Plan-Detail 7 on Sheet E-663A.

REQUEST FOR INFORMATION NOT ADDRESSED IN THIS CCO REMAIN IN FORCE

MARK	DATE	DESCRIPTIONS	BY	CH'D	CCO#
		REVISIONS			
0	03/08/10	MEP INTEGRATION	SYC	FW	110

CONTRACT CHANGE ORDER NO._____
SHEET _____ OF _____

DETAILS
BRIDGE STRUCTURES GIRDER WESTBOUND SKYWAY STRUCTURES AND OAKLAND APPROACH STRUCTURES INTERFACE-HINGE EW

SCALE AS NOTED

E-655

CALCULATED/ DESIGNED BY	CHECKED BY	DATE 01/10	SYC	FW	REVISED BY	DATE REVISED
DESIGN OVERSIGHT	BEHZAD GOLEMOHAMMADI					

STATE OF CALIFORNIA - DEPARTMENT OF TRANSPORTATION
Caltrans

THIS PLAN ACCURATE FOR ELECTRICAL WORK ONLY.

ALL DIMENSIONS ARE IN METERS UNLESS OTHERWISE SHOWN

FOR REDUCED PLANS ORIGINAL SCALE IS IN MILLIMETERS 0 20 40 60 80

DGN FILE =>04-0120f1_E-655.dgn
USERNAME =>llorico

CU 04251 EA 0120F1

LAST REVISION 00-00-00 DATE PLOTTED => 06-MAY-2010 TIME PLOTTED => 18:08

DIST	COUNTY	ROUTE	KILOMETER POST TOTAL PROJECT	SHEET No	TOTAL SHEETS
04	SF, Ala	80	12.2/14.3 0.0/4.0	407a 06S57	1204

Syn Yee Chin 03/08/10
REGISTERED ELECTRICAL ENGINEER DATE

SYN YEE CHIN
No. 18186
Exp. 09/30/2011
ELECTRICAL
REGISTERED PROFESSIONAL ENGINEER
STATE OF CALIFORNIA

05-06-2010
PLANS APPROVAL DATE

PB AMERICAS, Inc.
A Parsons Brinckerhoff Company
303 Second St., Suite 700N
San Francisco, CA 94107-1317

The State of California or its officers or agents shall not be responsible for the accuracy or completeness of electronic copies of this plan sheet.

Caltrans now has a web site! To get to the web site, go to http://www.dot.ca.gov

Skyway Structures Contract 04-012024

Oakland Touchdown 1 Contract 04-0120L4

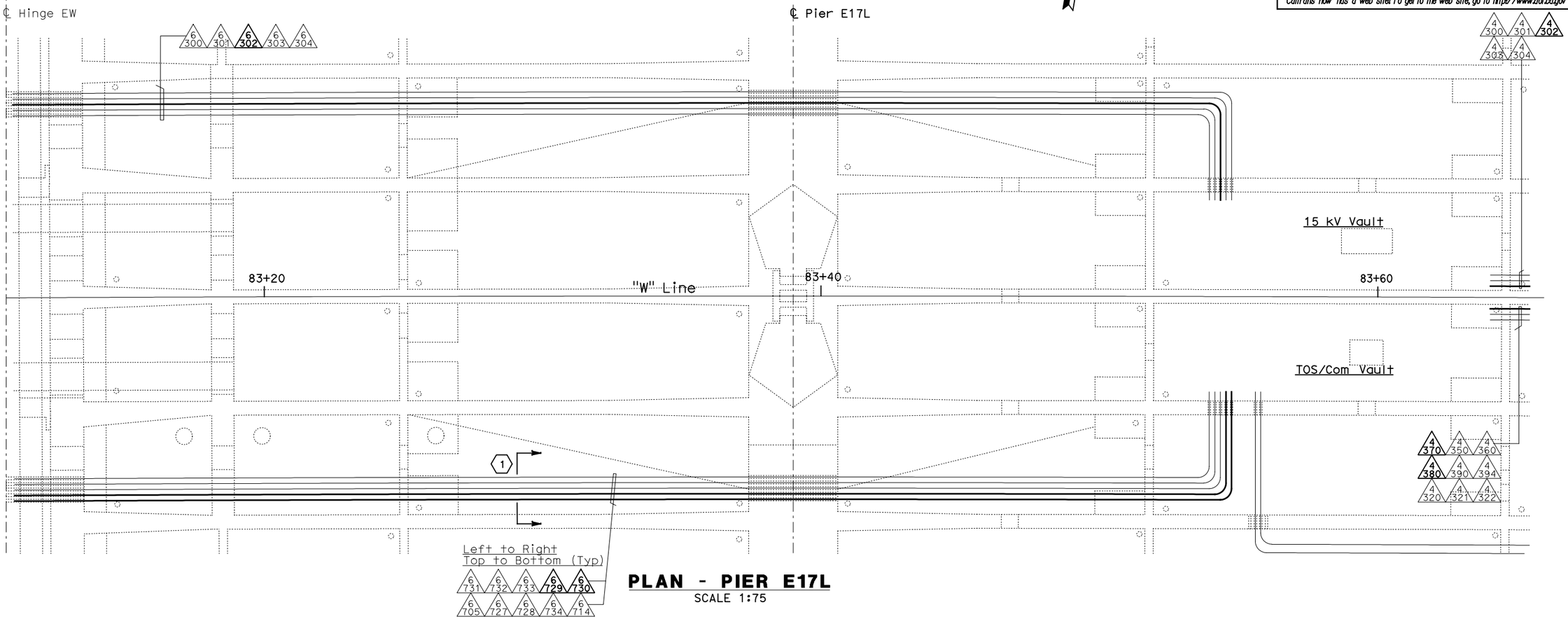

PLAN - PIER E17L
SCALE 1:75

NOTES:

1. This plan sheet is a record drawing from Oakland Touchdown 1 contract. The Contractor shall verify the existing installation. See sheet E-24 from Oakland Touchdown 1, contract No. 04-0120L4.
2. The installed components shall not be limited to the ones listed below, but shall be a complete installation. For details, see Bridge Structures Girder Westbound, typical Details sheets.
   - Furnish and install 15 kV cables into existing conduit shown on this drawing. See sheets E-664 and E-665.
   - Furnish and install TOS fiber optic cables into existing conduits shown on this drawing. See sheets E-978 through E-981.
   - Inspect for system ground continuity. See sheets E-666 and E-667.
3. All conduits shown on this drawing are existing. Bold ones are to be used for pulling cable.

SHEET NOTES:

(1) Cross section reference for conduit configuration.

REQUEST FOR INFORMATION NOT ADDRESSED IN THIS CCO REMAIN IN FORCE

MARK	DATE	DESCRIPTIONS	BY	CH'D	CCO#
		REVISIONS			
0	03/08/10	MEP INTEGRATION	SYC	FW	110

CONTRACT CHANGE ORDER NO._____
SHEET _____ OF _____

DETAILS
BRIDGE STRUCTURES GIRDER WESTBOUND
OAKLAND APPROACH STRUCTURES-PIER E17L
SCALE AS NOTED

E-656

DESIGN OVERSIGHT: BEHZAD GOLEMOHAMMADI

CALCULATED/DESIGNED BY: SYC | DATE 01/10 | REVISED BY: DATE REVISED
CHECKED BY: FW | 01/10

STATE OF CALIFORNIA - DEPARTMENT OF TRANSPORTATION
Caltrans

LAST REVISION 00-00-00 | DATE PLOTTED => 06-MAY-2010 | TIME PLOTTED => 18:08

THIS PLAN ACCURATE FOR ELECTRICAL WORK ONLY.

ALL DIMENSIONS ARE IN METERS UNLESS OTHERWISE SHOWN

FOR REDUCED PLANS ORIGINAL SCALE IS IN MILLIMETERS 0 20 40 60 80

DGN FILE =>04-0120f1_E-656.dgn
USERNAME =>llorico

CU 04251 | EA 0120F1

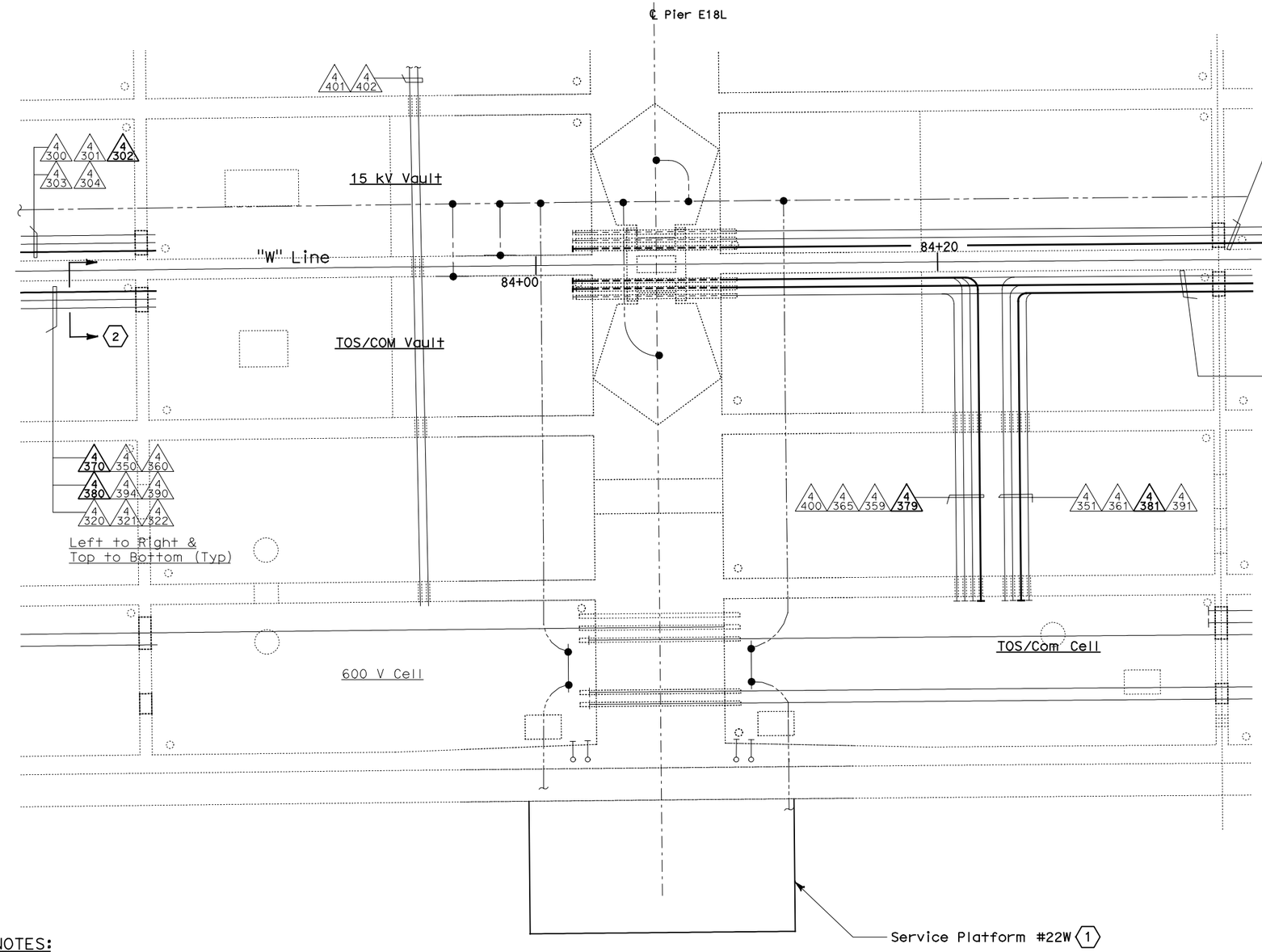

PLAN - PIER E18L

SCALE: 1:60

NOTES:

1. This plan sheet is a record drawing from Oakland Touchdown 1 contract. The Contractor shall verify the existing installation. See sheet E-25 of Oakland Touchdown 1, contract No. 04-0120L4.
2. The installed components shall not be limited to the ones listed below, but shall be a complete installation. For details, see Bridge Structures Girder Westbound, typical Details sheets.
   - Furnish and install 15 kV cables into existing conduit shown on this drawing. See sheets E-664 and E-665.
   - Furnish and install TOS fiber optic cables into existing conduits shown on this drawing. See sheets E-978 through E-981.
   - Inspect for system ground continuity.
3. All conduits shown on this drawing are existing. Bold ones are to be used for pulling cable.

SHEET NOTES:

(1) For Service Platform #22W details, see sheet E-658.

(2) Cross section reference for conduit configuration.

DIST	COUNTY	ROUTE	KILOMETER POST TOTAL PROJECT	SHEET No	TOTAL SHEETS
04	SF, Ala	80	12.2/14.3 0.0/4.0	407a 06S58	1204

Syn Yee Chin 03/08/10
REGISTERED ELECTRICAL ENGINEER DATE

REGISTERED PROFESSIONAL ENGINEER
SYN YEE CHIN
No. 18186
Exp. 09/30/2011
ELECTRICAL
STATE OF CALIFORNIA

05-06-2010
PLANS APPROVAL DATE

PB AMERICAS, Inc.
A Parsons Brinckerhoff Company
303 Second St., Suite 700N
San Francisco, CA 94107-1317

The State of California or its officers or agents shall not be responsible for the accuracy or completeness of electronic copies of this plan sheet.

Caltrans now has a web site! To get to the web site, go to http://www.dot.ca.gov

REQUEST FOR INFORMATION NOT ADDRESSED IN THIS CCO REMAIN IN FORCE					
0	03/08/10	MEP INTEGRATION	SYC	FW	110
MARK	DATE	DESCRIPTIONS	BY	CH'D	CCO#
REVISIONS					

CONTRACT CHANGE ORDER NO._____
SHEET _____ OF _____

DETAILS
BRIDGE STRUCTURES GIRDER WESTBOUND
OAKLAND APPROACH STRUCTURES-PIER E18L

SCALE AS NOTED

E-657

DESIGN OVERSIGHT	CALCULATED/ DESIGNED BY	DATE	REVISED BY
BEHZAD GOLEMOHAMMADI	CHECKED BY	SYC	DATE REVISED
		FW	01/10

STATE OF CALIFORNIA - DEPARTMENT OF TRANSPORTATION
Caltrans

THIS PLAN ACCURATE FOR ELECTRICAL WORK ONLY.

ALL DIMENSIONS ARE IN METERS UNLESS OTHERWISE SHOWN

FOR REDUCED PLANS ORIGINAL SCALE IS IN MILLIMETERS 0 20 40 60 80

DGN FILE =>04-0120f1_E-657.dgn
USERNAME =>llorico

CU 04251

EA 0120F1

LAST REVISION 00-00-00
DATE PLOTTED => 06-MAY-2010
TIME PLOTTED => 18:08

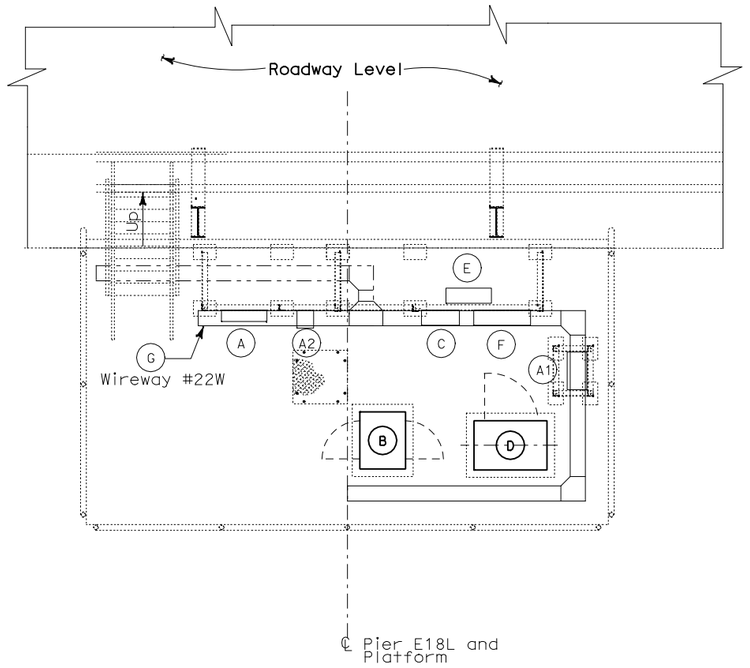

SERVICE PLATFORM #22W EQUIPMENT ARRANGEMENT PLAN

SCALE 1:40

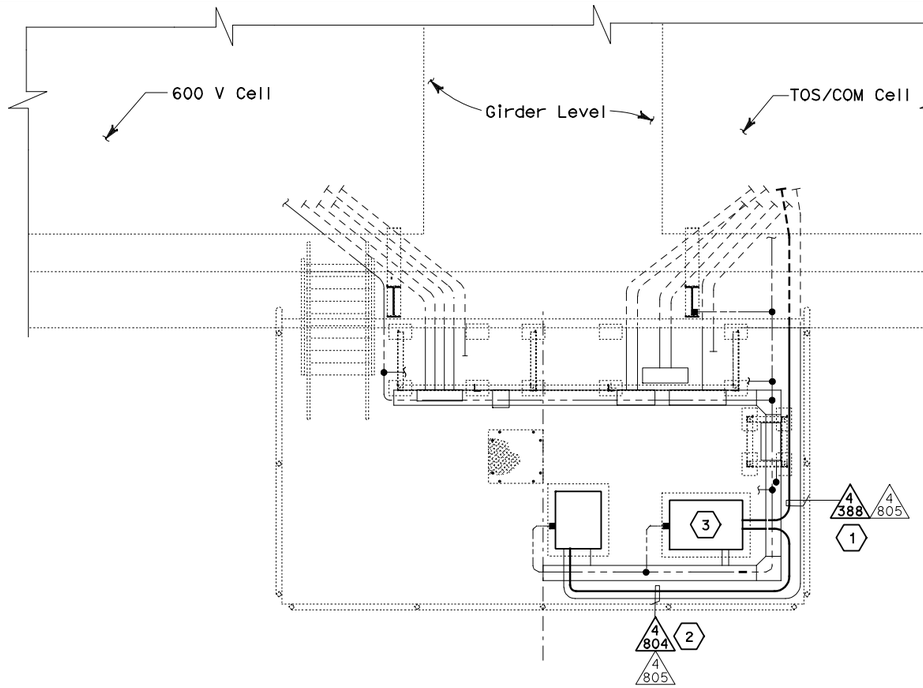

CONDUIT AND GROUNDING PLAN

SCALE 1:40

Caltrans Metric

DIST	COUNTY	ROUTE	KILOMETER POST TOTAL PROJECT	SHEET No	TOTAL SHEETS
04	SF, Ala	80	12.2/14.3 0.0/4.0	407a 06S59	1204

Syn Yee Chin 03/08/10
REGISTERED ELECTRICAL ENGINEER DATE

REGISTERED PROFESSIONAL ENGINEER
SYN YEE CHIN
No. 18186
Exp. 09/30/2011
ELECTRICAL
STATE OF CALIFORNIA

05-06-2010
PLANS APPROVAL DATE

PB AMERICAS, Inc.
A Parsons Brinckerhoff Company
303 Second St., Suite 700N
San Francisco, CA 94107-1317

The State of California or its officers or agents shall not be responsible for the accuracy or completeness of electronic copies of this plan sheet.

Caltrans now has a web site! To get to the web site, go to http://www.dot.ca.gov

NOTES:

1. This plan sheet is a record drawing from Oakland Touchdown 1 contract. The Contractor shall verify the existing installation. See sheet E-20 from Oakland Touchdown 1, contract No. 04-0120L4.
2. The installed components shall not be limited to the ones listed below, but shall be a complete installation. For details, see Bridge Structures Girder Westbound, typical Details sheets.
   - Furnish and install TOS fiber optic cables into existing conduits shown on this drawing. See sheets E-978 through E-981.
3. All conduits and equipment shown on this drawing are existing. Bold ones are to be used for pulling cable.

SHEET NOTES:

(1) Furnish and install TOS fiber optic cables into existing conduit. Pull a 72 fiber and terminate in the splice closure inside TOS Splice Cabinet. See sheets E-980, E-981, and E-982.

(2) Furnish and install 12 fiber optic cables from Fiber Optic Splice Closure to Controller Cabinet. Coil 3m of cable inside Controller Cabinet for connection by others. The coiled end of the fiber optic cables shall be terminated with mated connectors. See sheets E-972 and E-973.

(3) Furnish and install Fiber Splice Closure in existing TOS Splice Cabinet.

EQUIPMENT SCHEDULE:

(A) Utility Panel UP-171
208/120 V, 3 Phase, 4 wire (NEMA 4X)
Size: 914 H x 610 W x 152 D. (PB-8A)

(A1) 15 KVA Transformer, 3 Phase, 4 wire
480V - 208/120 V, 60 Hz, (NEMA) 4X)
Size: 762 H x 584 W x 419 D

(A2) Enclosed molded case circuit breaker,(NEMA 4X)
Size: 506 H x 225 W x 237 D

(B) **Controller Cabinet #TOS-22WA**
Size: 1625 H x 615 W x 768 D

(C) Telephone Terminal Box #TEL-22W (PB-7C)
Size: 762 H x 508 W x 203 D

(D) **TOS splice cabinet #TOS-22WS with Fiber Splice Closure #FSC-22W (3) inside (Refer to TOS sheet E-972)**
Size: 1400 H x 980 W x 660 D

(E) PB-2B for TOS/COM, mounted on panel rack
Size: 762 H x 610 W x 203 D

(F) SCADA Communication Terminal Box #COM-22W (PB-7B)
Size: 762 H x 762 W x 203 D

(G) 600 V, Wireway (NEMA 4X)
Size: 203 H x 203 W

REQUEST FOR INFORMATION NOT ADDRESSED IN THIS CCO REMAIN IN FORCE					
0	03/08/10	MEP INTEGRATION	SYC	FW	110
MARK	DATE	DESCRIPTIONS	BY	CH'D	CCO#
REVISIONS					

CONTRACT CHANGE ORDER NO._____
SHEET _____ OF _____

DETAILS
BRIDGE STRUCTURES GIRDER WESTBOUND
OAKLAND APPROACH STRUCTURES-SERVICE PLATFORM #22W

SCALE AS NOTED

E-658

DESIGN OVERSIGHT	CALCULATED/ DESIGNED BY	DRAWN BY	CHECKED BY	DATE	REVISED BY
BEHZAD GOLEMOHAMMADI	SYC	FW		01/10	DATE REVISED

STATE OF CALIFORNIA - DEPARTMENT OF TRANSPORTATION
Caltrans

THIS PLAN ACCURATE FOR ELECTRICAL WORK ONLY.

ALL DIMENSIONS ARE IN METERS UNLESS OTHERWISE SHOWN

FOR REDUCED PLANS ORIGINAL SCALE IS IN MILLIMETERS 0 20 40 60 80

DGN FILE =>04-0120f1_E-658.dgn
USERNAME =>llorico

CU 04251

EA 0120F1

LAST REVISION 00-00-00
DATE PLOTTED => 06-MAY-2010
TIME PLOTTED => 18:08

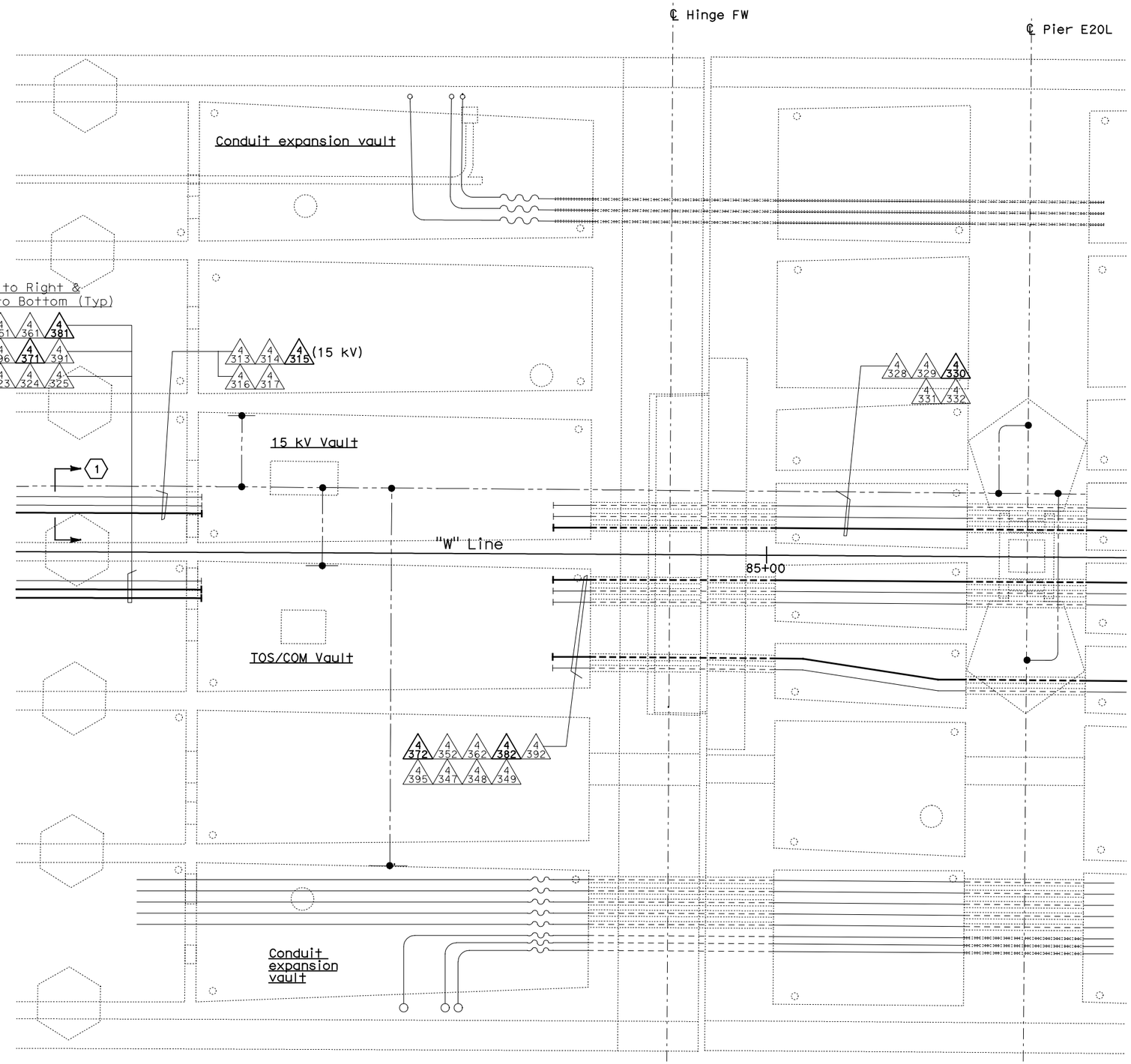

PLAN - HINGE FW

SCALE: 1:60

Caltrans Metric

DIST	COUNTY	ROUTE	KILOMETER POST TOTAL PROJECT	SHEET No	TOTAL SHEETS
04	SF,Ala	80	12.2/14.3 0.0/4.0	407a 06S60	1204

Synyee Chin 03/08/10
REGISTERED ELECTRICAL ENGINEER DATE

REGISTERED PROFESSIONAL ENGINEER
SYN YEE CHIN
No. 18186
Exp. 09/30/2011
ELECTRICAL
STATE OF CALIFORNIA

05-06-2010
PLANS APPROVAL DATE

PB AMERICAS, Inc.
A Parsons Brinckerhoff Company
303 Second St., Suite 700N
San Francisco, CA 94107-1317

The State of California or its officers or agents shall not be responsible for the accuracy or completeness of electronic copies of this plan sheet.

Caltrans now has a web site! To get to the web site, go to http://www.dot.ca.gov

NOTES:

1. This plan sheet is a record drawing from Oakland Touchdown 1 contract. The Contractor shall verify the existing installation. See sheet E-26 from Oakland Touchdown 1, contract No. 04-0120L4.
2. The installed components shall not be limited to the ones listed below, but shall be a complete installation. For details, see Bridge Structures Girder Westbound, typical Details sheets.
   - Furnish and install 15 kV cables into existing conduits shown on this drawing. See sheets E-664 and E-665.
   - Furnish and install TOS fiber optic cables into existing conduits shown on this drawing. See sheets E-978 through E-981.
   - Inspect for system ground continuity.
3. All conduits shown on this drawing are existing. Bold ones are to be used for pulling cable.

SHEET NOTES:

(1) Cross section reference for conduit configuration.

REQUEST FOR INFORMATION NOT ADDRESSED IN THIS CCO REMAIN IN FORCE

MARK	DATE	DESCRIPTIONS	BY	CH'D	CCO#
		REVISIONS			
0	03/08/10	MEP INTEGRATION	SYC	FW	110

CONTRACT CHANGE ORDER NO._____
SHEET _____ OF _____

DETAILS
BRIDGE STRUCTURES GIRDER WESTBOUND
OAKLAND APPROACH STRUCTURES-HINGE FW

SCALE AS NOTED

E-659

CALCULATED/DESIGNED BY	DATE	REVISED BY
CHECKED BY	DATE REVISED	
SYC	03/10	FW

DESIGN OVERSIGHT
BEHZAD GOLEMOHAMMADI

STATE OF CALIFORNIA - DEPARTMENT OF TRANSPORTATION
Caltrans

LAST REVISION 00-00-00
DATE PLOTTED => 06-MAY-2010
TIME PLOTTED => 18:08

THIS PLAN ACCURATE FOR ELECTRICAL WORK ONLY.

ALL DIMENSIONS ARE IN METERS UNLESS OTHERWISE SHOWN

FOR REDUCED PLANS ORIGINAL SCALE IS IN MILLIMETERS 0 20 40 60 80

DGN FILE =>04-0120f1_E-659.dgn
USERNAME =>llorico

CU 04251

EA 0120F1

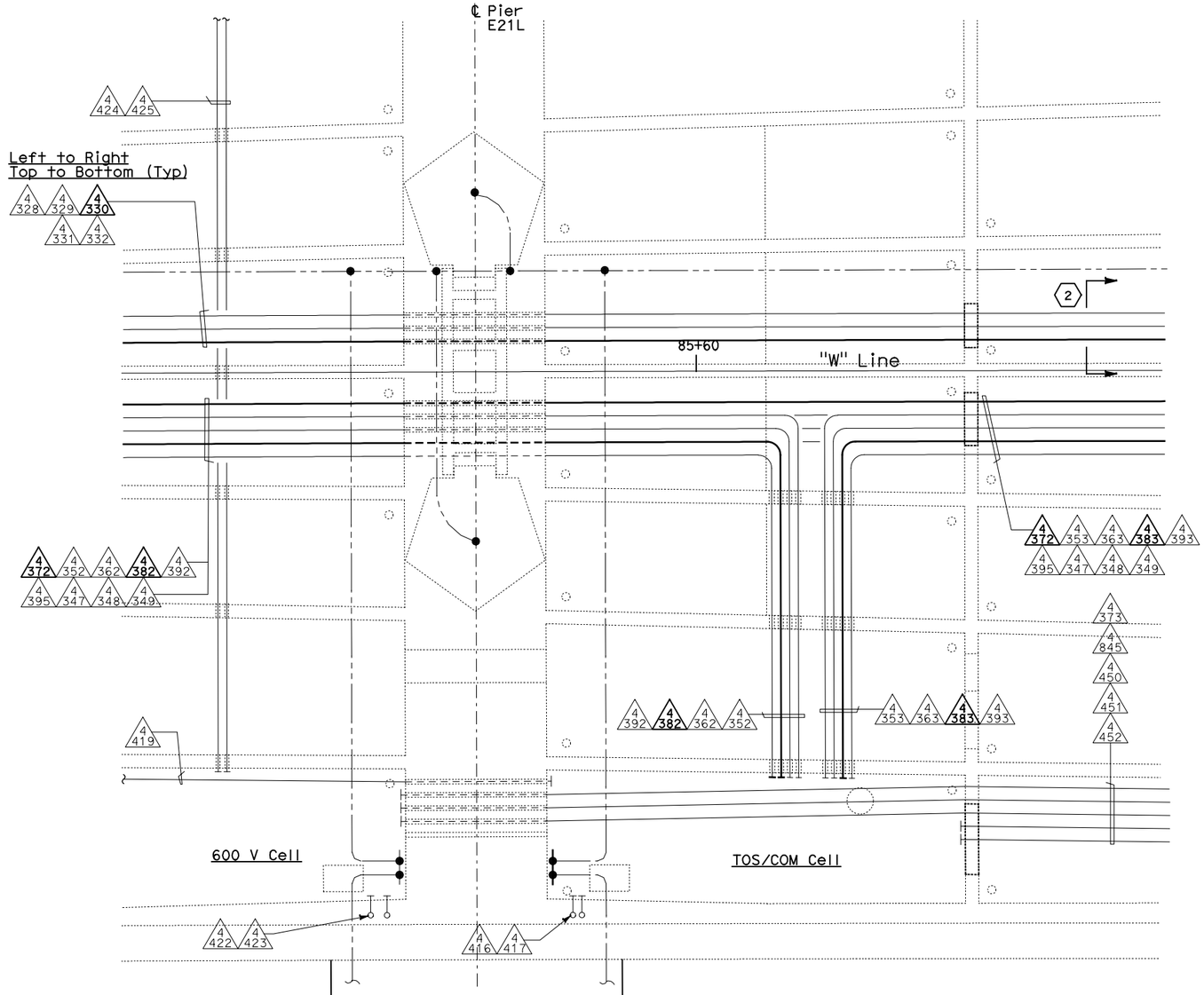

PLAN - PIER E21L
SCALE: 1:60

Caltrans Metric

DIST	COUNTY	ROUTE	KILOMETER POST TOTAL PROJECT	SHEET No	TOTAL SHEETS
04	SF, Ala	80	12.2/14.3 0.0/4.0	407a 06S61	1204

Syn Yee Chin 03/08/10
REGISTERED ELECTRICAL ENGINEER DATE

REGISTERED PROFESSIONAL ENGINEER
SYN YEE CHIN
No. 18186
Exp. 09/30/2011
ELECTRICAL
STATE OF CALIFORNIA

05-06-2010
PLANS APPROVAL DATE

PB AMERICAS, Inc.
A Parsons Brinckerhoff Company
303 Second St., Suite 700N
San Francisco, CA 94107-1317

The State of California or its officers or agents shall not be responsible for the accuracy or completeness of electronic copies of this plan sheet.

Caltrans now has a web site! To get to the web site, go to http://www.dot.ca.gov

NOTES:

1. This plan sheet is a record drawing from Oakland Touchdown 1 contract. The Contractor shall verify the existing installation. See sheet E-27 from Oakland Touchdown 1, contract No. 04-0120L4.
2. The installed components shall not be limited to the ones listed below, but shall be a complete installation. For details, see Bridge Structures Girder Westbound, typical Details sheets.
   - Furnish and install 15 kV cables into existing conduit shown on this drawing. See sheets E-664 and E-665.
   - Furnish and install TOS fiber optic cables into existing conduits shown on this drawing. See sheets E-978 through E-981.
   - Inspect for system ground continuity.
3. All conduits shown on this drawing are existing. Bold ones are to be used for pulling cable.

SHEET NOTES:

1. For Service Platform #23W Details, see sheet E-661.
2. Cross section reference for conduit cofiguration.

REQUEST FOR INFORMATION NOT ADDRESSED IN THIS CCO REMAIN IN FORCE

MARK	DATE	DESCRIPTIONS	BY	CH'D	CCO#
		REVISIONS			
0	03/08/10	MEP INTEGRATION	SYC	FW	110

CONTRACT CHANGE ORDER NO._____
SHEET _____ OF _____

DETAILS
BRIDGE STRUCTURES GIRDER WESTBOUND
OAKLAND APPROACH STRUCTURES-PIER E21L
SCALE AS NOTED

E-660

DESIGN OVERSIGHT	BEHZAD GOLEMOHAMMADI
CALCULATED/ DESIGNED BY	
CHECKED BY	
DRAWN BY	SYC
REVISED BY	FW
DATE REVISED	01/10
DATE	01/10

STATE OF CALIFORNIA - DEPARTMENT OF TRANSPORTATION
Caltrans

THIS PLAN ACCURATE FOR ELECTRICAL WORK ONLY.

ALL DIMENSIONS ARE IN METERS UNLESS OTHERWISE SHOWN

FOR REDUCED PLANS ORIGINAL SCALE IS IN MILLIMETERS 0 20 40 60 80

DGN FILE =>04-0120f1_E-660.dgn
USERNAME =>llorico

CU 04251

EA 0120F1

LAST REVISION 00-00-00
DATE PLOTTED => 06-MAY-2010
TIME PLOTTED => 18:08

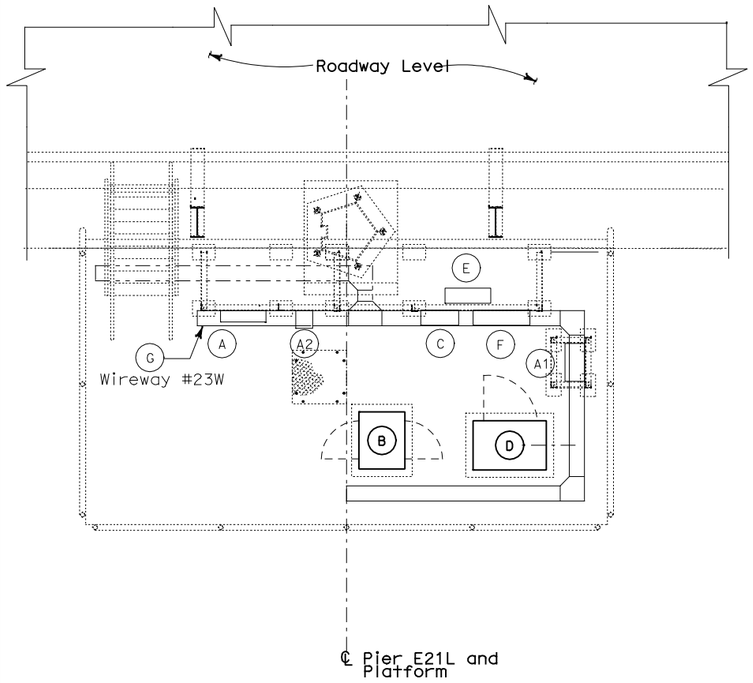

EQUIPMENT ARRANGEMENT PLAN
SCALE 1:40

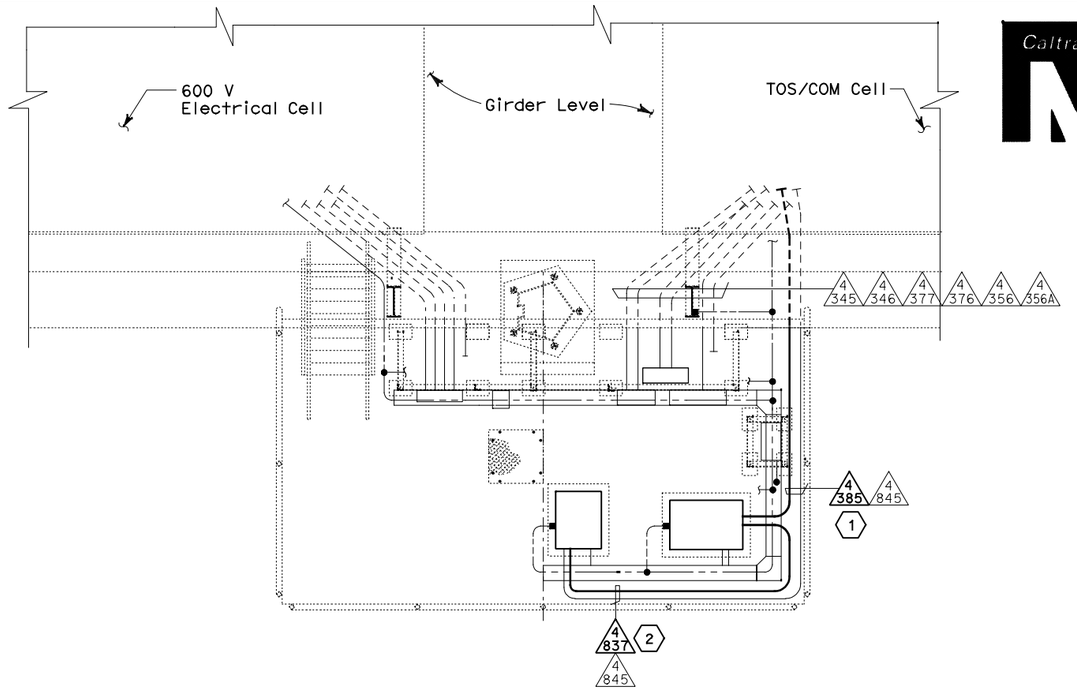

CONDUIT AND GROUNDING PLAN
SCALE 1:40

Caltrans Metric

DIST	COUNTY	ROUTE	KILOMETER POST TOTAL PROJECT	SHEET No	TOTAL SHEETS
04	SF, Ala	80	12.2/14.3 0.0/4.0	407a 06S62	1204

Syn Yee Chin 03/08/10
REGISTERED ELECTRICAL ENGINEER DATE

SYN YEE CHIN No. 18186 Exp. 09/30/2011 ELECTRICAL — REGISTERED PROFESSIONAL ENGINEER — STATE OF CALIFORNIA

PLANS APPROVAL DATE

PB AMERICAS, Inc.
A Parsons Brinckerhoff Company
303 Second St., Suite 700N
San Francisco, CA 94107-1317

The State of California or its officers or agents shall not be responsible for the accuracy or completeness of electronic copies of this plan sheet.

Caltrans now has a web site! To get to the web site, go to http://www.dot.ca.gov

DESIGN OVERSIGHT — BEHZAD GOLEMOHAMMADI

CALCULATED/DESIGNED BY — SYC
CHECKED BY — FW

DATE	REVISED BY	DATE REVISED
01/10	01/10	

100% SUBMITTAL (03/08/2010)

STATE OF CALIFORNIA - DEPARTMENT OF TRANSPORTATION
Caltrans

NOTES:

1. This plan sheet is a record drawing from Oakland Touchdown 1 contract. The Contractor shall verify the existing installation. See sheet E-21 from Oakland Touchdown 1, contract No. 04-0120L4.
2. The installed components shall not be limited to the ones listed below, but shall be a complete installation. For details, see Bridge Structures Girder Westbound, typical Details sheets.
   - Furnish and install TOS fiber optic cables into existing conduits shown on this drawing. See sheets E-978 through E-981.
3. All conduits and equipment shown on this drawing are existing. Bold ones are to be used for pulling cable.

SHEET NOTES:

(1) Furnish and install (3) one inch inner duct in this conduit. Use one inner duct to pull TOS Fiber FTC-W from TOS/COM Cell into TOS Splice Cabinet and coil 9 m for splicing by others. Furnish and install a 72 fiber by coiling 9m of its end in TOS Splice Cabinet and pulling through another inner duct inside the same conduit heading towards TOS/COM Cell in girder then continue eastwards. The coiled ends of the fiber cable shall be terminated with mated connectors. Refer to sheets E-972 through E-980.

(2) Furnish and install 12 fiber optic cables from TOS Splice Cabinet to Controller Cabinet. Coil 3m of cable inside Controller Cabinet for connection by others. The coiled end of the fiber optic cables shall be terminated with mated connectors. See sheets E-972 through E-980.

EQUIPMENT SCHEDULE:

(A) Utility Panel UP-172, 100A
208/120 V, 3 Phase, 4 wire (NEMA 4X)
Size: 914 H x 610 W x 152 D. (PB-8A)

(A1) 15 KVA Transformer, 3 Phase, 4 wire
480V - 208/120 V, 60 Hz, (NEMA) 4X)
Size: 762 H x 584 W x 419 D

(A2) Enclosed molded case circuit breaker,(NEMA 4X)
Size: 506 H x 225 W x 237 D

(B) Controller Cabinet #TOS-23WA
Size: 1625 H x 615 W x 768 D

(C) Telephone Terminal Box #TEL-23W (PB-7C)
Size: 762 H x 508 W x 203 D

(D) TOS splice cabinet #TOS-23WS
Size: 1400 H x 980 W x 660 D

(E) PB-2B for TOS/COM, mounted on panel rack
Size: 762 H x 610 W x 203 D

(F) SCADA Communication Terminal Box #COM-23W (PB-7B)
Size: 762 H x 762 W x 203 D

(G) 600V, Wireway #23W (NEMA 4X)
Size: 203 H x 203 W

REQUEST FOR INFORMATION NOT ADDRESSED IN THIS CCO REMAIN IN FORCE

MARK	DATE	DESCRIPTIONS	BY	CH'D	CCO#
		REVISIONS			
0	03/08/10	MEP INTEGRATION	SYC	FW	110

CONTRACT CHANGE ORDER NO._____
SHEET _____ OF _____

DETAILS
BRIDGE STRUCTURES GIRDER WESTBOUND
OAKLAND APPROACH STRUCTURES-SERVICE PLATFORM #23W
SCALE AS NOTED

E-661

LAST REVISION 00-00-00 — DATE PLOTTED => 06-MAY-2010 — TIME PLOTTED => 18:08

THIS PLAN ACCURATE FOR ELECTRICAL WORK ONLY.

ALL DIMENSIONS ARE IN METERS UNLESS OTHERWISE SHOWN

FOR REDUCED PLANS ORIGINAL SCALE IS IN MILLIMETERS 0 20 40 60 80

DGN FILE =>04-0120f1_E-661.dgn
USERNAME =>llorico

CU 04251

EA 0120F1

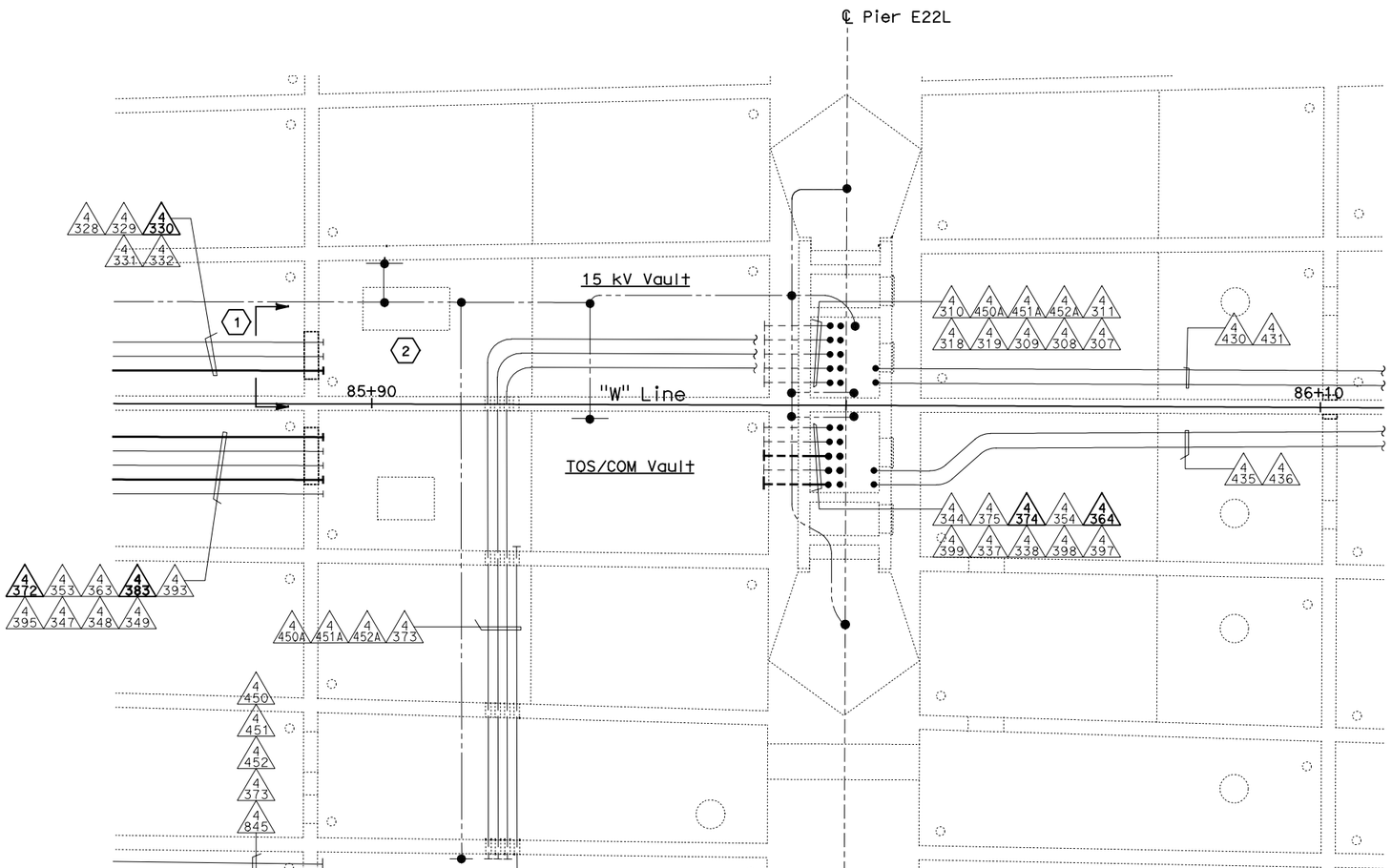

PLAN - PIER E22L

SCALE: 1:60

Caltrans Metric

DIST	COUNTY	ROUTE	KILOMETER POST TOTAL PROJECT	SHEET No	TOTAL SHEETS
04	SF, Ala	80	12.2/14.3 0.0/4.0	407a 06S63	1204

Syn Yee Chin 03/08/10
REGISTERED ELECTRICAL ENGINEER DATE

REGISTERED PROFESSIONAL ENGINEER
SYN YEE CHIN
No. 18186
Exp. 09/30/2011
ELECTRICAL
STATE OF CALIFORNIA

05-06-2010
PLANS APPROVAL DATE

PB AMERICAS, Inc.
A Parsons Brinckerhoff Company
303 Second St., Suite 700N
San Francisco, CA 94107-1317

The State of California or its officers or agents shall not be responsible for the accuracy or completeness of electronic copies of this plan sheet.

Caltrans now has a web site! To get to the web site, go to http://www.dot.ca.gov

NOTES:

1. This plan sheet is a record drawing from Oakland Touchdown 1 contract. The Contractor shall verify the existing installation. See sheet E-28 from Oakland Touchdown 1, contract No. 04-0120L4.
2. The installed components shall not be limited to the ones listed below, but shall be a complete installation. For details, see Bridge Structures Girder Westbound, typical Details sheets.
   - Furnish and install 15 kV cables into existing conduit shown on this drawing. Refer to riser diagram on sheets E-664 and E-665.
   - Furnish and install (4) one-inch inner-ducts with TOS fiber optic cables in one inner-duct, into existing conduit shown on this drawing. Refer to riser diagram on sheets E-978 through E-981 and detail on E-973.
   - Inspect for system ground continuity.
3. All conduits shown on this drawing are existing. Bold ones are to be used for pulling cable.

SHEET NOTES:

(1) Cross section reference for conduit configuration.

(2) Contractor shall coil 50 m of 15 kV cable in vault for future splice. See sheet E-663A, Detail 3A for racking details.

REQUEST FOR INFORMATION NOT ADDRESSED IN THIS CCO REMAIN IN FORCE

MARK	DATE	DESCRIPTIONS	BY	CH'D	CCO#
		REVISIONS			
0	03/08/10	MEP INTEGRATION	SYC	FW	110

CONTRACT CHANGE ORDER NO._____
SHEET _____ OF _____

DETAILS
BRIDGE STRUCTURES GIRDER WESTBOUND
OAKLAND APPROACH STRUCTURES-PIER E22L

SCALE AS NOTED

E-662

STATE OF CALIFORNIA - DEPARTMENT OF TRANSPORTATION
Caltrans
DESIGN OVERSIGHT
BEHZAD GOLEMOHAMMADI
CALCULATED/ DESIGNED BY
CHECKED BY
DATE 01/10
SYC
FW
01/10
REVISED BY
DATE REVISED

THIS PLAN ACCURATE FOR ELECTRICAL WORK ONLY.

ALL DIMENSIONS ARE IN METERS UNLESS OTHERWISE SHOWN

FOR REDUCED PLANS ORIGINAL SCALE IS IN MILLIMETERS 0 20 40 60 80

DGN FILE =>04-0120f1_E-662.dgn
USERNAME =>llorico

CU 04251

EA 0120F1

LAST REVISION 00-00-00
DATE PLOTTED => 06-MAY-2010
TIME PLOTTED => 18:09

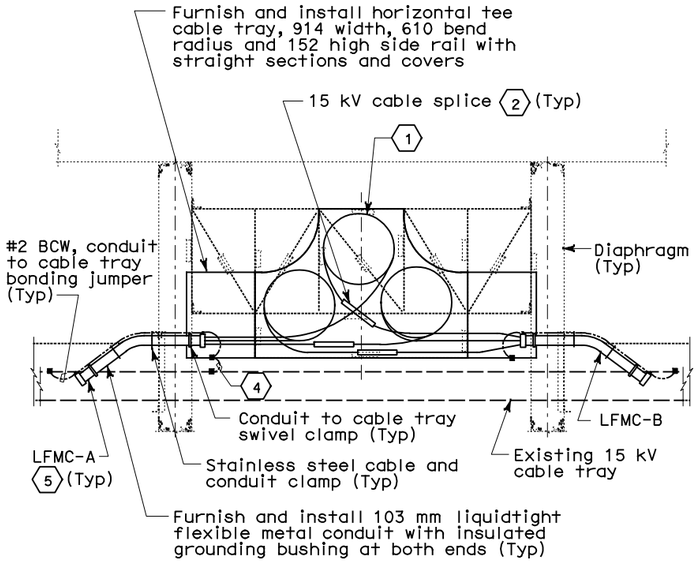

PLAN - DETAIL 1

15 kV Splice Cable Tray installation between diaphragms

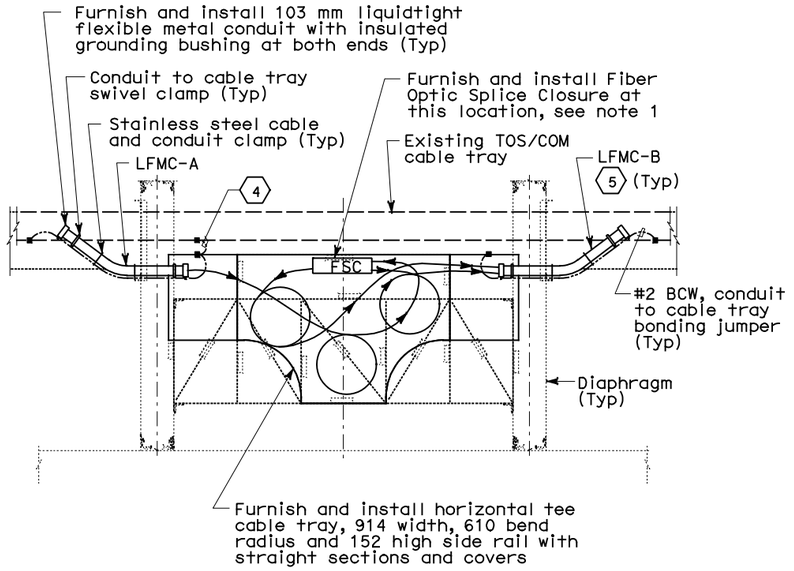

PLAN - DETAIL 2

TOS/COM Splice Cable Tray installation between diaphragms

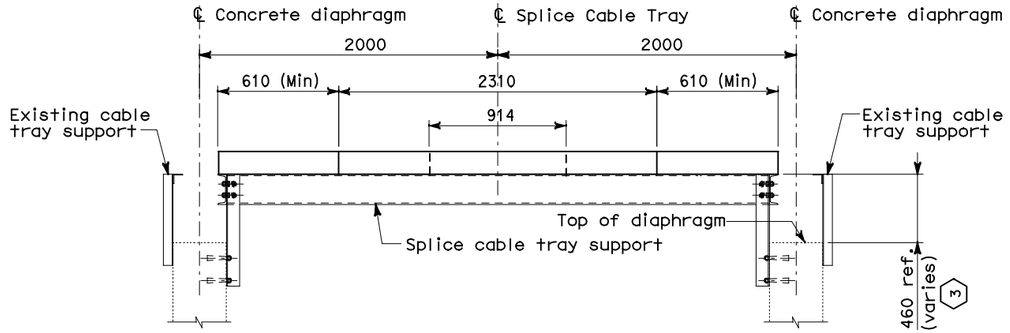

SECTION - DETAIL 4

Splice Cable Tray Support on Concrete Diaphragms
Refer to AS-20 for structural details

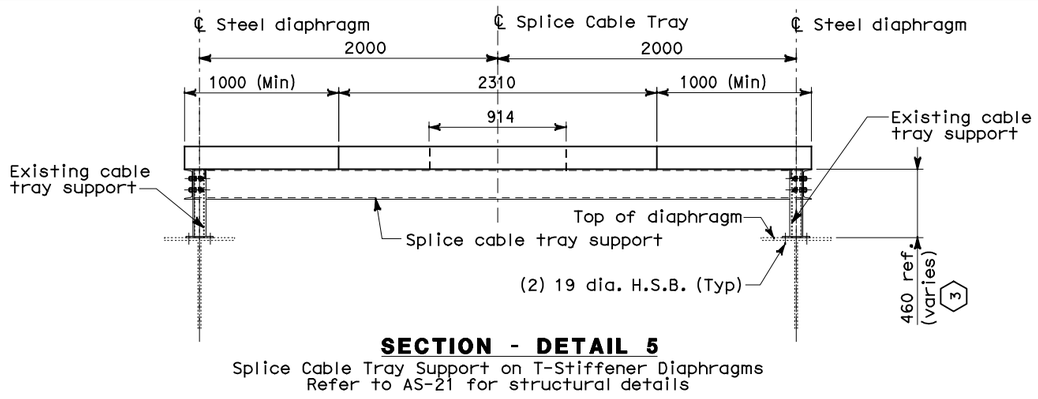

SECTION - DETAIL 5

Splice Cable Tray Support on T-Stiffener Diaphragms
Refer to AS-21 for structural details

THIS PLAN ACCURATE FOR ELECTRICAL WORK ONLY.

TABLE A		
15 kV Splice Cable Tray Conduit Schedule		
Location	LFMC-A	LFMC-B
Sta 62 + 38 (Hinge AW)	6502A	6502B
Sta 68 + 58 (Hinge BW)	6530A	6530B
Sta 74 + 95 (Hinge CW)	6586A	6586B
Sta 80 + 91 (Hinge DW)	6642A	6642B
Sta 82 + 87 (Hinge EW)	6936	-
TOS/COM Splice Cable Tray Conduit Schedule		
Location	LFMC-A	LFMC-B
Sta 62 + 38 (Hinge AW)	6523A	6523B
Sta 62 + 50 (Hinge AW)	6523C	6523D
Sta 63 + 07 (Service Platform #9W)	4852A	4852B
Sta 64 + 67 (Service Platform #10W)	4862A	4862B
Sta 66 + 27 (Service Platform #11W)	4872A	4872B
Sta 67 + 91 (Service Platform #12W)	4881A	4881B
Sta 69 + 47 (Service Platform #13W)	4982A	4982B
Sta 72 + 67 (Service Platform #15W)	4912A	4912B
Sta 74 + 31 (Service Platform #16W)	4922A	4922B
Sta 75 + 86 (Service Platform #17W)	4931A	4931B
Sta 77 + 47 (Service Platform #18W)	4942A	4942B
Sta 80 + 39 (Service Platform #20W)	4962A	4962B
Sta 81 + 55 (Service Platform #21W)	4972A	4972B
Sta 82 + 79 (Hinge EW)	6973A	6973B
Sta 82 + 87 (Hinge EW)	6972A	6972B

ALL DIMENSIONS ARE IN MILLIMETERS UNLESS OTHERWISE SHOWN

Caltrans Metric

DIST	COUNTY	ROUTE	KILOMETER POST TOTAL PROJECT	SHEET No	TOTAL SHEETS
04	SF, Ala	80	12.2/14.3 0.0/4.0	407a 06S64	1204

Syn Yee Chin 03/08/10
REGISTERED ELECTRICAL ENGINEER DATE

REGISTERED PROFESSIONAL ENGINEER
SYN YEE CHIN
No. 18186
Exp. 09/30/2011
ELECTRICAL
STATE OF CALIFORNIA

PLANS APPROVAL DATE

PB AMERICAS, Inc.
A Parsons Brinckerhoff Company
303 Second St., Suite 700N
San Francisco, CA 94107-1317

The State of California or its officers or agents shall not be responsible for the accuracy or completeness of electronic copies of this plan sheet.

Caltrans now has a web site! To get to the web site, go to http://www.dot.ca.gov

NOTES:

1. For fiber optic splice detail, see sheet E-972.

SHEET NOTES:

(1) Minimum cable bend radius shall be 12 times the diameter of the cable. Provide 6.5 meter cable slack per phase. For shield grounding see sheet E-663A, Detail 6.

(2) The 15 kV cable splice shall not project above the cable tray side rails. Locate splice at near mid-point of coiled cable.

(3) Contractor to verify dimensions and make adjustment to the support to suit field condition as required.

(4) Cable tray bonding jumper assembly shall be Cooper B-Line Catalog #99-40 or approved equal. Mounting hardware shall be hot dipped galvanized steel, ribbed neck carriage bolt, serrated flange hex nut, flat and lock washers.

(5) See Table A for conduit location and designation number.

REQUEST FOR INFORMATION NOT ADDRESSED IN THIS CCO REMAIN IN FORCE

MARK	DATE	DESCRIPTIONS	BY	CH'D	CCO#
		REVISIONS			
0	03/08/10	MEP INTEGRATION	RG SYC	FW	110

CONTRACT CHANGE ORDER NO._____
SHEET _____ OF _____

DETAILS
BRIDGE STRUCTURES GIRDER WESTBOUND
GIRDER TYPICAL DETAILS

NO SCALE

E-663

DESIGNED BY	CHECKED BY	DRAWN BY	CHECKED BY	REVISED BY	DATE REVISED
SYC	FW	01/10	01/10		

DESIGN OVERSIGHT: BEHZAD GOLEMOHAMMADI

100% SUBMITTAL (03/08/2010)

STATE OF CALIFORNIA - DEPARTMENT OF TRANSPORTATION

Caltrans

FOR REDUCED PLANS ORIGINAL SCALE IS IN MILLIMETERS 0 20 40 60 80

DGN FILE =>04-0120f1_E-663.dgn
USERNAME =>llorico

CU 04251 EA 0120F1

LAST REVISION 00-00-00
DATE PLOTTED => 06-MAY-2010
TIME PLOTTED => 18:09

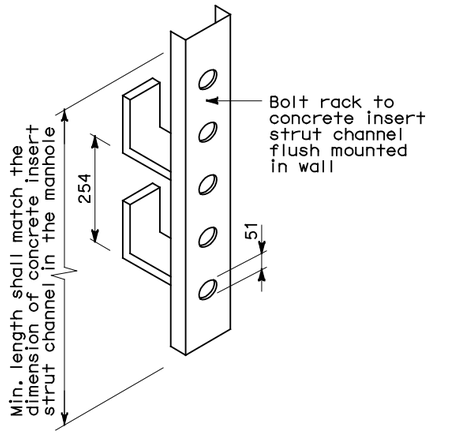

CABLE SADDLE RACK IN MANHOLE

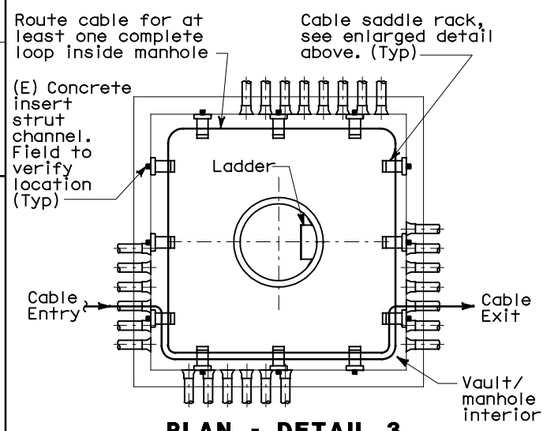

PLAN - DETAIL 3
Manhole Cable Loop on Support Rack

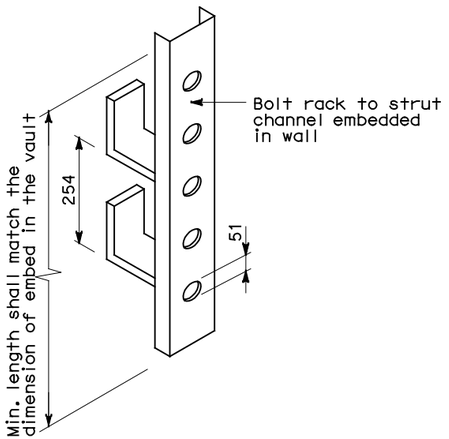

CABLE SADDLE RACK IN VAULT

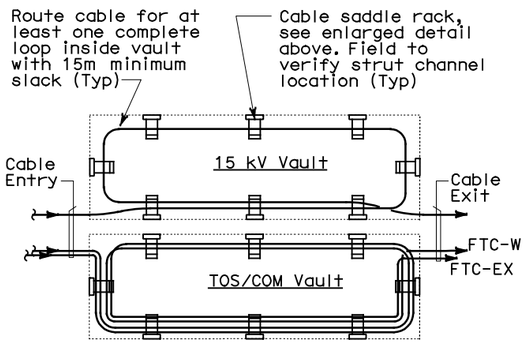

PLAN - DETAIL 3A
Vault Cable Loop on Support Rack

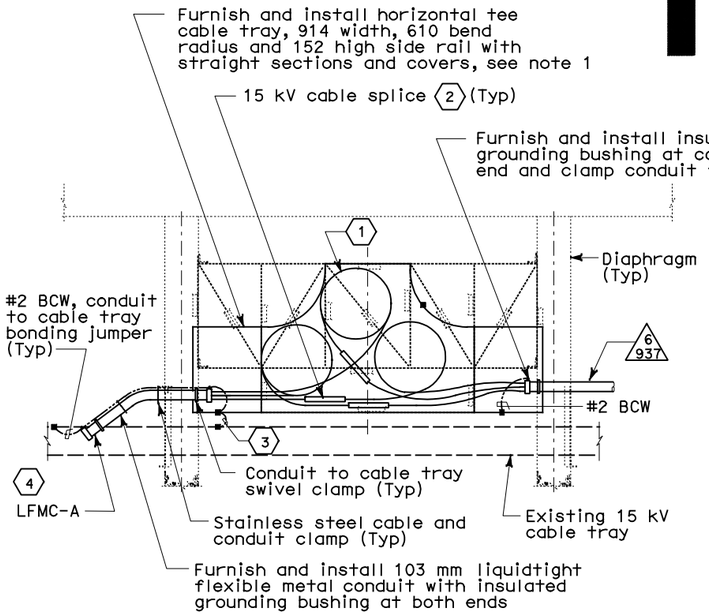

PLAN - DETAIL 7
15 kV Splice Cable Tray installation between diaphragms
See E-655 for Splice Cable Tray Location

NOTES:

1. For splice cable tray support details, see sheet E-663.

SHEET NOTES:

1. Minimum cable bend radius shall be 12 times the diameter of the cable. Provide 6.5 meter cable slack per phase. For shield grounding see Detail 6.
2. The 15 kV cable splice shall not project above the cable tray side rails. Locate splice at near mid-point of coiled cable.
3. Cable tray bonding jumper assembly shall be Cooper B-Line Catalog #99-40 or approved equal. Mounting hardware shall be hot dipped galvanized steel, ribbed neck carriage bolt, serrated flange hex nut, flat and lock washers.
4. See sheet E-663, Table A for conduit location and designation number.
5. Extend conduit to location shown on sheet E-655.

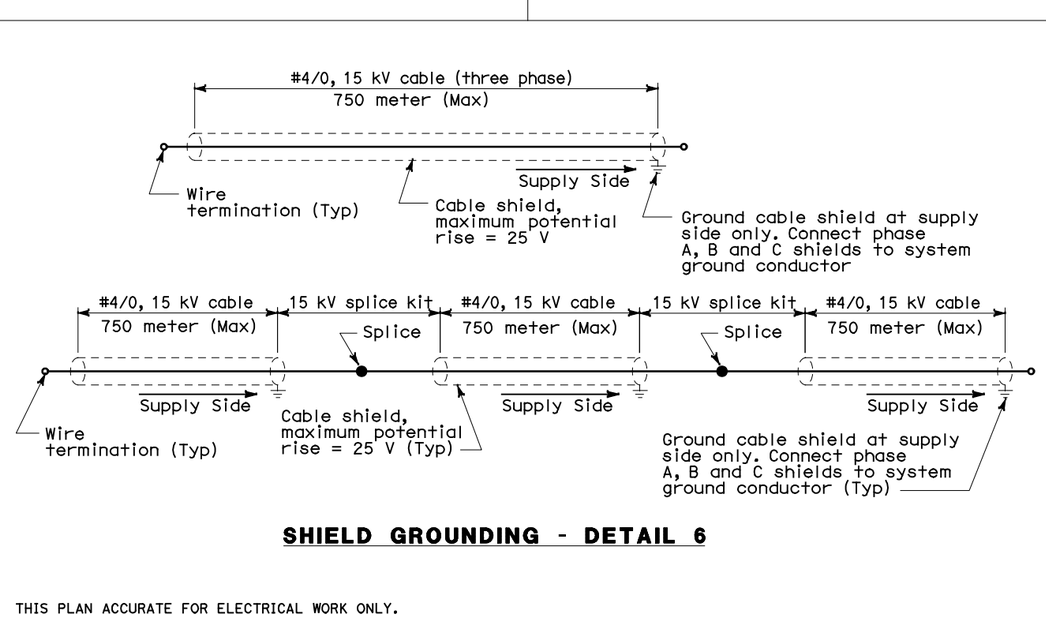

SHIELD GROUNDING - DETAIL 6

DIST	COUNTY	ROUTE	KILOMETER POST TOTAL PROJECT	SHEET No	TOTAL SHEETS
04	SF, Ala	80	12.2/14.3 0.0/4.0	407a 06S65	1204

Syn Yee Chin 03/08/10
REGISTERED ELECTRICAL ENGINEER DATE

05-06-2010
PLANS APPROVAL DATE

REGISTERED PROFESSIONAL ENGINEER
SYN YEE CHIN
No. 18186
Exp. 09/30/2011
ELECTRICAL
STATE OF CALIFORNIA

PB AMERICAS, Inc.
A Parsons Brinckerhoff Company
303 Second St., Suite 700N
San Francisco, CA 94107-1317

The State of California or its officers or agents shall not be responsible for the accuracy or completeness of electronic copies of this plan sheet.

Caltrans now has a web site! To get to the web site, go to http://www.dot.ca.gov

REVISED BY	DATE REVISED
DATE 01/10	01/10
SYC	FW
CALCULATED/ DESIGNED BY	CHECKED BY

DESIGN OVERSIGHT
BEHZAD GOLEMOHAMMADI

STATE OF CALIFORNIA - DEPARTMENT OF TRANSPORTATION
Caltrans

REQUEST FOR INFORMATION NOT ADDRESSED IN THIS CCO REMAIN IN FORCE

MARK	DATE	REVISIONS	BY	CH'D	CCO#
0	03/08/10	MEP INTEGRATION	RG SYC	FW	110

CONTRACT CHANGE ORDER NO._____
SHEET _____ OF _____

DETAILS
BRIDGE STRUCTURES GIRDER WESTBOUND
GIRDER TYPICAL DETAILS
NO SCALE

E-663A

LAST REVISION 00-00-00
DATE PLOTTED => 06-MAY-2010
TIME PLOTTED => 18:09

THIS PLAN ACCURATE FOR ELECTRICAL WORK ONLY.

ALL DIMENSIONS ARE IN MILLIMETERS UNLESS OTHERWISE SHOWN

FOR REDUCED PLANS ORIGINAL SCALE IS IN MILLIMETERS 0 20 40 60 80

DGN FILE =>04-0120f1_E-663A.dgn
USERNAME =>llorico

CU 04251

EA 0120F1

DIST	COUNTY	ROUTE	KILOMETER POST TOTAL PROJECT	SHEET No	TOTAL SHEETS
04	SF, Ala	80	12.2/14.3 0.0/4.0	407a 06S66	1204

Syn Yee Chin 03/08/10
REGISTERED ELECTRICAL ENGINEER DATE

05-06-2010
PLANS APPROVAL DATE

REGISTERED PROFESSIONAL ENGINEER
SYN YEE CHIN
No. 18186
Exp. 09/30/2011
ELECTRICAL
STATE OF CALIFORNIA

PB AMERICAS, Inc.
A Parsons Brinckerhoff Company
303 Second St., Suite 700N
San Francisco, CA 94107-1317

The State of California or its officers or agents shall not be responsible for the accuracy or completeness of electronic copies of this plan sheet.

Caltrans now has a web site! To get to the web site, go to http://www.dot.ca.gov

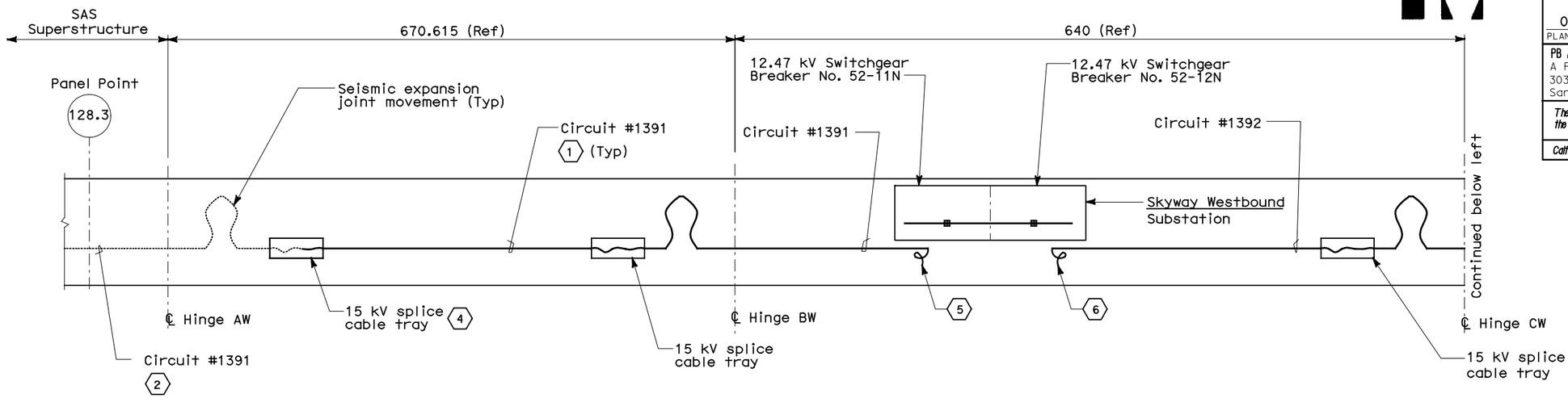

SKYWAY STRUCTURES

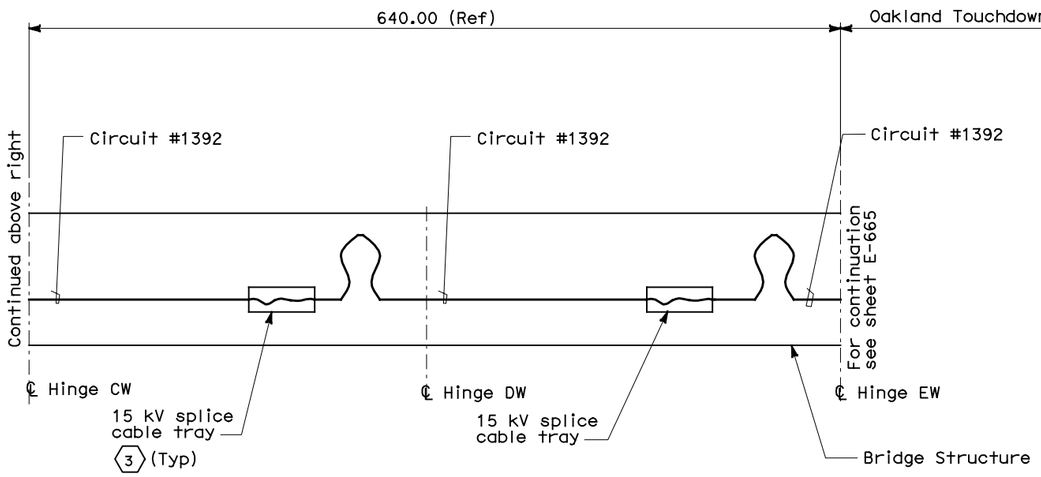

SKYWAY STRUCTURES

REQUEST FOR INFORMATION NOT ADDRESSED IN THIS CCO REMAIN IN FORCE

MARK	DATE	DESCRIPTIONS	BY	CH'D	CCO#
		REVISIONS			
0	03/08/10	MEP INTEGRATION	SYC	FW	110

CONTRACT CHANGE ORDER NO._____
SHEET_____ OF _____

SHEET NOTES:

1. Contractor to furnish and install the cables. The 15 kV cable tray and conduits was installed under Skyway Structures contract.
2. Cables to be installed by others.
3. Contractor to splice the 15 kV cables in the 15 kV splice cable tray.
4. Contractor to splice 15 kV cables for tie-in with 15 kV cables from SAS Superstructure.
5. Contractor to coil 25 m cable length for future terminations to 12.47 kV switchgear. See sheet E-644.
6. Contractor to coil 45 m cable length for future terminations to 12.47 kV switchgear. See sheet E-644.

DETAILS
BRIDGE STRUCTURES GIRDER WESTBOUND
SKYWAY STRUCTURES WB-15 KV RISER DIAGRAM
NO SCALE

E-664

DESIGN OVERSIGHT
BEHZAD GOLEMOHAMMADI

CALCULATED/ DESIGNED BY
CHECKED BY

DATE	BY	REVISED BY	DATE REVISED
01/10	FW		
08/10	SYC		

STATE OF CALIFORNIA - DEPARTMENT OF TRANSPORTATION
Caltrans

LAST REVISION 00-00-00
DATE PLOTTED => 06-MAY-2010
TIME PLOTTED => 18:09

THIS PLAN ACCURATE FOR ELECTRICAL WORK ONLY.

ALL DIMENSIONS ARE IN METERS UNLESS OTHERWISE SHOWN

FOR REDUCED PLANS ORIGINAL SCALE IS IN MILLIMETERS 0 20 40 60 80

DGN FILE =>04-0120f1_E-664.dgn
USERNAME =>llorico

CU 04251

EA 0120F1

DIST	COUNTY	ROUTE	KILOMETER POST TOTAL PROJECT	SHEET No	TOTAL SHEETS
04	SF, Ala	80	12.2/14.3 0.0/4.0	407a 06S67	1204

REGISTERED ELECTRICAL ENGINEER DATE

REGISTERED PROFESSIONAL ENGINEER
FADI WALIEDDINE
No. 11465
Exp. 12/31/2009
ELECTRICAL
STATE OF CALIFORNIA

PLANS APPROVAL DATE

PB AMERICAS, Inc.
A Parsons Brinckerhoff Company
303 Second St., Suite 700N
San Francisco, CA 94107-1317

The State of California or its officers or agents shall not be responsible for the accuracy or completeness of electronic copies of this plan sheet.

Caltrans now has a web site! To get to the web site, go to http://www.dot.ca.gov

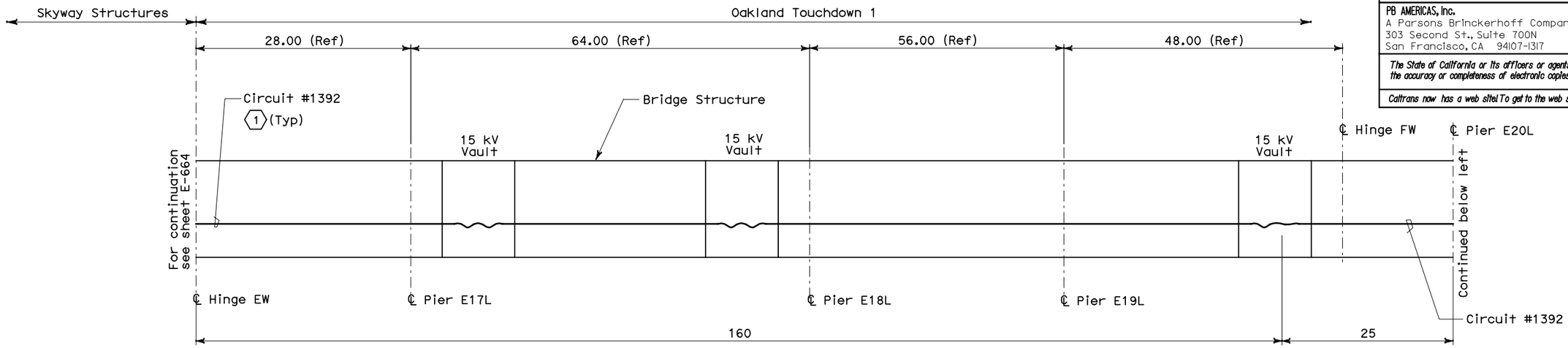

OAKLAND TOUCHDOWN 1

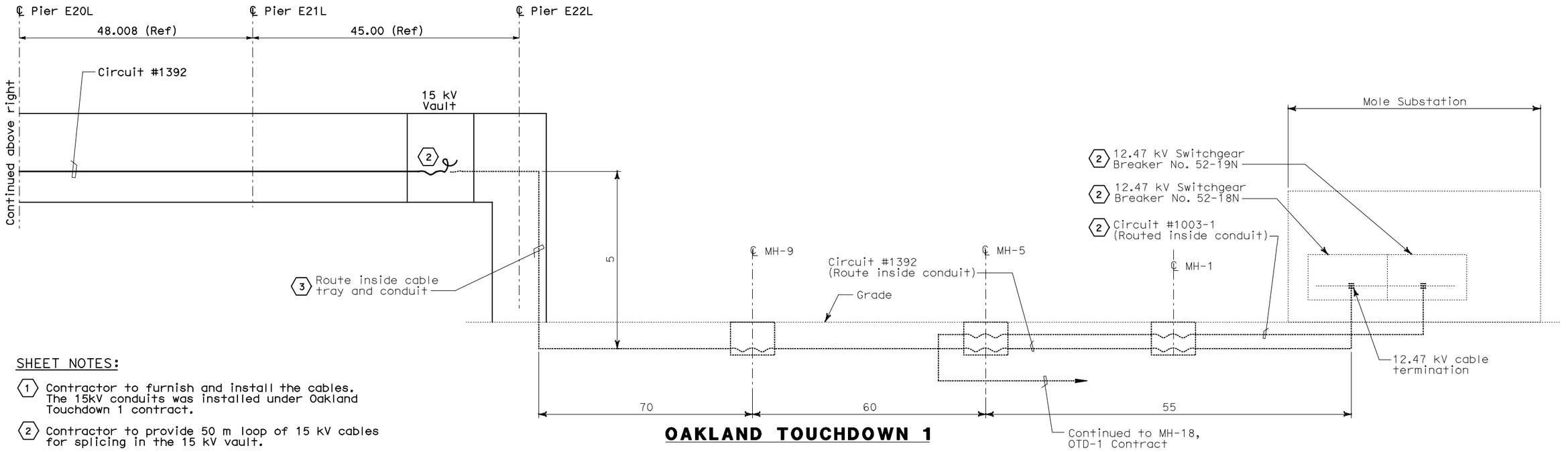

OAKLAND TOUCHDOWN 1

SHEET NOTES:

(1) Contractor to furnish and install the cables. The 15kV conduits was installed under Oakland Touchdown 1 contract.

(2) Contractor to provide 50 m loop of 15 kV cables for splicing in the 15 kV vault.

(3) Cables to be furnished and installed by others.

REQUEST FOR INFORMATION NOT ADDRESSED IN THIS CCO REMAIN IN FORCE

MARK	DATE	DESCRIPTIONS	BY	CH'D	CCO#
		REVISIONS			
0	03/08/10	MEP INTEGRATION	SYC	FW	110

CONTRACT CHANGE ORDER NO._____
SHEET _____ OF _____

DETAILS
BRIDGE STRUCTURES GIRDER WESTBOUND
OAKLAND APPROACH STRUCTURES WB-15 kV RISER DIAGRAM

NO SCALE

E-665

THIS PLAN ACCURATE FOR ELECTRICAL WORK ONLY.

ALL DIMENSIONS ARE IN METERS UNLESS OTHERWISE SHOWN.

100% SUBMITTAL (03/08/2010)
STATE OF CALIFORNIA - DEPARTMENT OF TRANSPORTATION
DESIGN OVERSIGHT
BEHZAD GOLEMOHAMMADI
Caltrans

CALCULATED/ DESIGNED BY	SYC	DATE 01/10	REVISED BY
CHECKED BY	FW	01/10	DATE REVISED

LAST REVISION 00-00-00
DATE PLOTTED => 06-MAY-2010
TIME PLOTTED => 18:09

FOR REDUCED PLANS ORIGINAL SCALE IS IN MILLIMETERS 0 20 40 60 80

DGN FILE =>04-0120f1_E-665.dgn
USERNAME =>llorico

CU 04251

EA 0120F1

DIST	COUNTY	ROUTE	KILOMETER POST TOTAL PROJECT	SHEET No	TOTAL SHEETS
04	SF, Ala	80	12.2/14.3 0.0/4.0	407a 06S68	1204

Caltrans Metric

Syn Yee Chin 03/08/10
REGISTERED ELECTRICAL ENGINEER DATE

05-06-2010
PLANS APPROVAL DATE

REGISTERED PROFESSIONAL ENGINEER
SYN YEE CHIN
No. 18186
Exp. 09/30/2011
ELECTRICAL
STATE OF CALIFORNIA

PB AMERICAS, Inc.
A Parsons Brinckerhoff Company
303 Second St., Suite 700N
San Francisco, CA 94107-1317

The State of California or its officers or agents shall not be responsible for the accuracy or completeness of electronic copies of this plan sheet.

Caltrans now has a web site! To get to the web site, go to http://www.dot.ca.gov

DATE	REVISED BY	DATE	REVISED
01/10	SYC	01/10	FW

CALCULATED/DESIGNED BY
CHECKED BY

DESIGN OVERSIGHT
BEHZAD GOLEMOHAMMADI

STATE OF CALIFORNIA - DEPARTMENT OF TRANSPORTATION
Caltrans

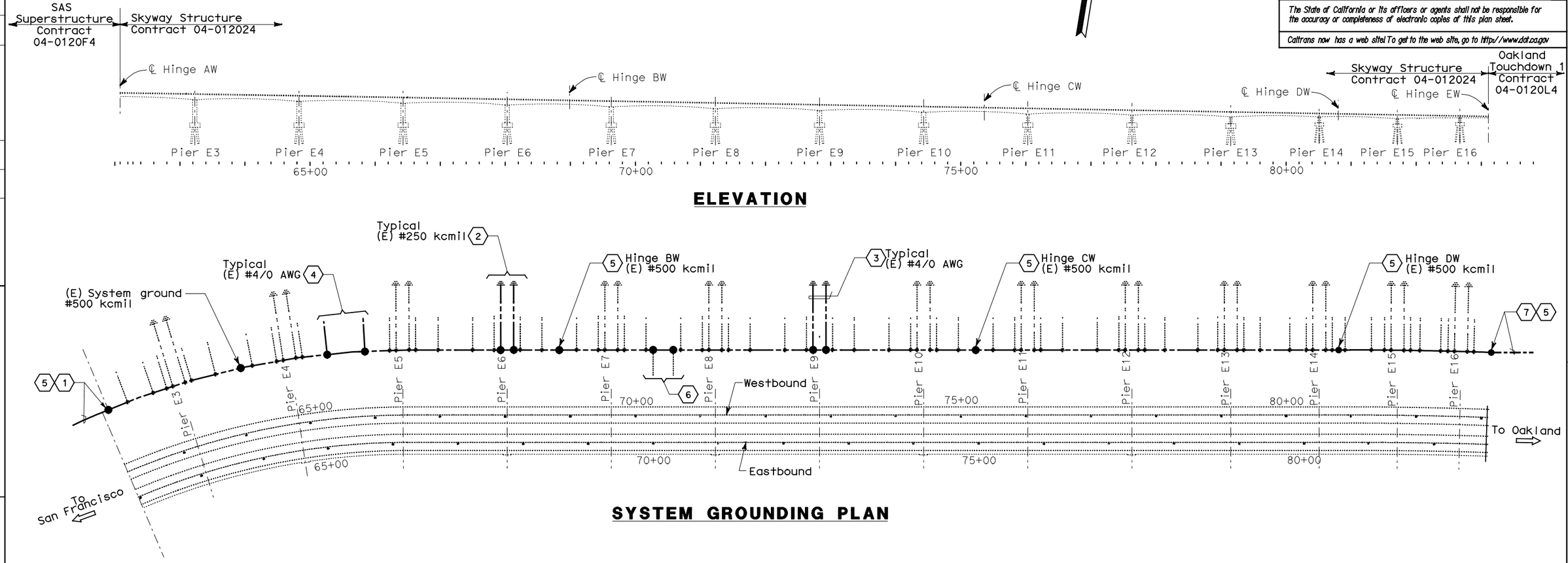

ELEVATION

SYSTEM GROUNDING PLAN

NOTES:

1. References:
   - For applicable details see Grounding Detail sheet E-667.
2. The system ground shall be continuously and mechanically connected as noted on the sheet notes. The Contractor shall provide the inspection report to the Engineer.

SHEET NOTES:

(1) The Contractor shall connect the system ground provided by Skyway contract. The system ground #500 kcmil shall be exothermically connected from SAS contract.

(2) The Contractor shall visually inspect the ground connection to the pier column. The ground connection is #250 kcmil to the system ground.

(3) The Contractor shall visually inspect the ground connection to the service platform. The ground connection is #4/0 AWG, routed inside an existing conduit to the system ground.

SHEET NOTES:

(4) The Contractor shall visually inspect the ground connection the cable tray racks. The ground connection is #4/0 AWG, located 1/3 the distance between pier columns.

(5) The Contractor shall disconnect and remove the connected system ground routed inside the existing hinge conduits. This ground conductor shall be re-installed together with 15 kV feeder cable. The ground conductors shall be exothermically re-connected.

(6) The Contractor shall visually inspect the ground connections to the ground bar inside the substation. The bar is connected to the system ground.

(7) The Contractor shall connect the system ground provided by Oakland Touchdown OTD-1 contract. The system ground #500 kcmil provided by Skyway contract shall be exothermically connected by this Contractor.

REQUEST FOR INFORMATION NOT ADDRESSED IN THIS CCO REMAIN IN FORCE

MARK	DATE	REVISIONS DESCRIPTIONS	BY	CH'D	CCO#
0	03/08/10	MEP INTEGRATION	SYC	FW	110

CONTRACT CHANGE ORDER NO._____
SHEET _____ OF _____

DETAILS
BRIDGE STRUCTURES GIRDER WESTBOUND MAIN BRIDGE SYSTEM GROUNDING-WB

SCALE: 1:3000

E-666

THIS PLAN ACCURATE FOR ELECTRICAL WORK ONLY.

ALL DIMENSIONS ARE IN METERS UNLESS OTHERWISE SHOWN

FOR REDUCED PLANS ORIGINAL SCALE IS IN MILLIMETERS 0 20 40 60 80

DGN FILE =>04-0120f1_E-666.dgn
USERNAME =>llorico

CU 04251

EA 0120F1

LAST REVISION 00-00-00
DATE PLOTTED => 06-MAY-2010
TIME PLOTTED => 18:09

DIST	COUNTY	ROUTE	KILOMETER POST TOTAL PROJECT	SHEET No	TOTAL SHEETS
04	SF, Ala	80	12.2/14.3 0.0/4.0	407a 06S69	1204

Syn Yee Chin 03/08/10
REGISTERED ELECTRICAL ENGINEER DATE

05-06-2010
PLANS APPROVAL DATE

REGISTERED PROFESSIONAL ENGINEER
SYN YEE CHIN
No. 18186
Exp. 09/30/2011
ELECTRICAL
STATE OF CALIFORNIA

PB AMERICAS, Inc.
A Parsons Brinckerhoff Company
303 Second St., Suite 700N
San Francisco, CA 94107-1317

The State of California or its officers or agents shall not be responsible for the accuracy or completeness of electronic copies of this plan sheet.

Caltrans now has a web site! To get to the web site, go to http://www.dot.ca.gov

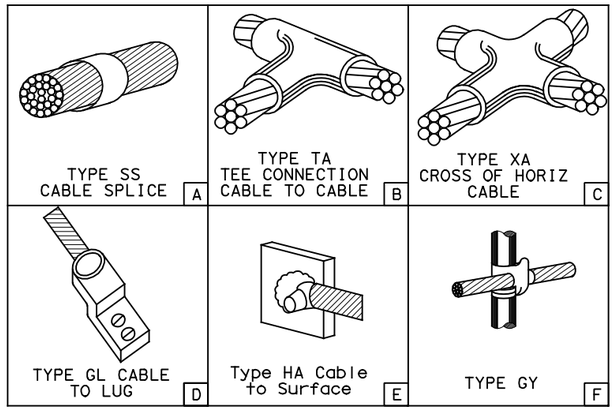

EXOTHERMIC CONNECTIONS (FIG. A THRU F)

DETAIL 1

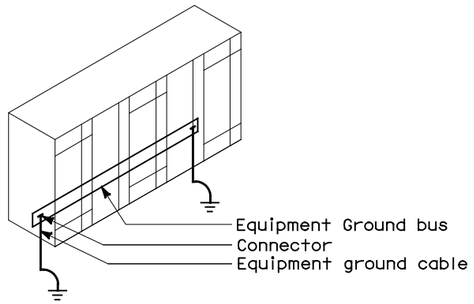

All switchgear, low voltage control centers are furnished with a ground bus. Each end of the ground bus is grounded.

EQUIPMENT GROUND FOR SWITCHGEAR, LVCC

DETAIL 4

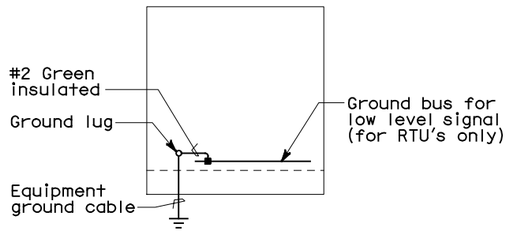

EQUIPMENT GROUND FOR
CONTROL CABINETS AND RTU'S

DETAIL 2

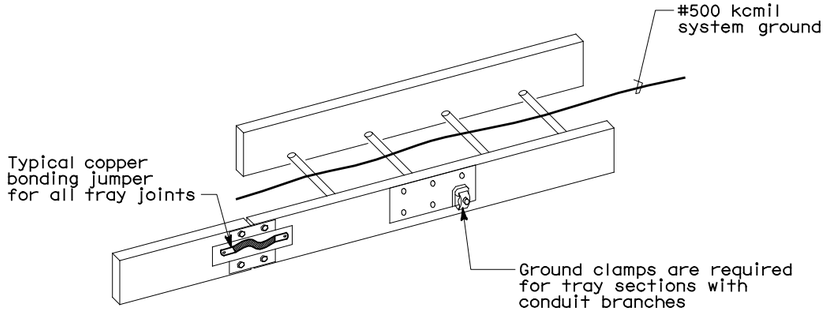

GROUNDING OF METALLIC 15kV CABLE TRAYS

DETAIL 5

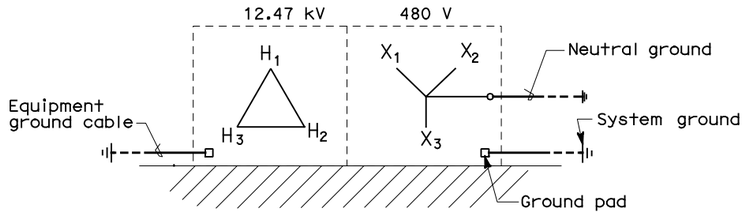

TRANSFORMER GROUNDING

DETAIL 3

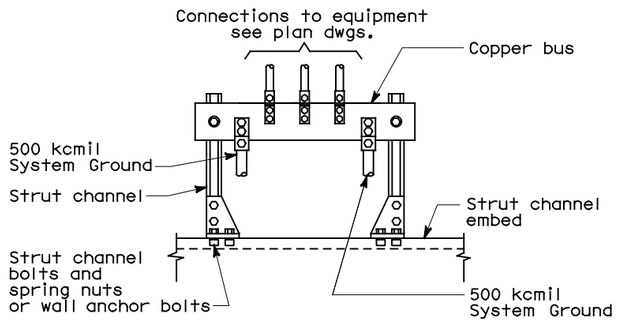

GROUND BAR

DETAIL 6

REQUEST FOR INFORMATION NOT ADDRESSED IN THIS CCO REMAIN IN FORCE					
0	03/08/10	MEP INTEGRATION	SYC	FW	110
MARK	DATE	DESCRIPTIONS	BY	CH'D	CCO#
REVISIONS					

CONTRACT CHANGE ORDER NO._____
SHEET _____ OF _____

DETAILS
BRIDGE STRUCTURES GIRDER WESTBOUND
TYPICAL GROUNDING INSTALLATION-WB

NO SCALE

E-667

CALCULATED/ DESIGNED BY	SYC
CHECKED BY	FW

DATE	REVISED BY
01/10	DATE REVISED

DESIGN OVERSIGHT
BEHZAD GOLEMOHAMMADI

STATE OF CALIFORNIA - DEPARTMENT OF TRANSPORTATION
Caltrans

THIS PLAN ACCURATE FOR ELECTRICAL WORK ONLY.

ALL DIMENSIONS ARE IN MILLIMETERS UNLESS OTHERWISE SHOWN

FOR REDUCED PLANS ORIGINAL SCALE IS IN MILLIMETERS 0 20 40 60 80

DGN FILE =>04-0120f1_E-667.dgn
USERNAME =>llorico

CU 04251

EA 0120F1

LAST REVISION 00-00-00
DATE PLOTTED => 06-MAY-2010
TIME PLOTTED => 18:09

DIST	COUNTY	ROUTE	KILOMETER POST TOTAL PROJECT	SHEET No	TOTAL SHEETS
04	SF, Ala	80	12.2/14.3 0.0/4.0	407a 08S01	1204

Syn Yee Chin 03/08/10
REGISTERED ELECTRICAL ENGINEER DATE

05-06-2010
PLANS APPROVAL DATE

REGISTERED PROFESSIONAL ENGINEER
SYN YEE CHIN
No. 18186
Exp. 09/30/2011
ELECTRICAL
STATE OF CALIFORNIA

PB AMERICAS, Inc.
A Parsons Brinckerhoff Company
303 Second St., Suite 700N
San Francisco, CA 94107-1317

The State of California or its officers or agents shall not be responsible for the accuracy or completeness of electronic copies of this plan sheet.

Caltrans now has a web site! To get to the web site, go to http://www.dot.ca.gov

Caltrans Metric

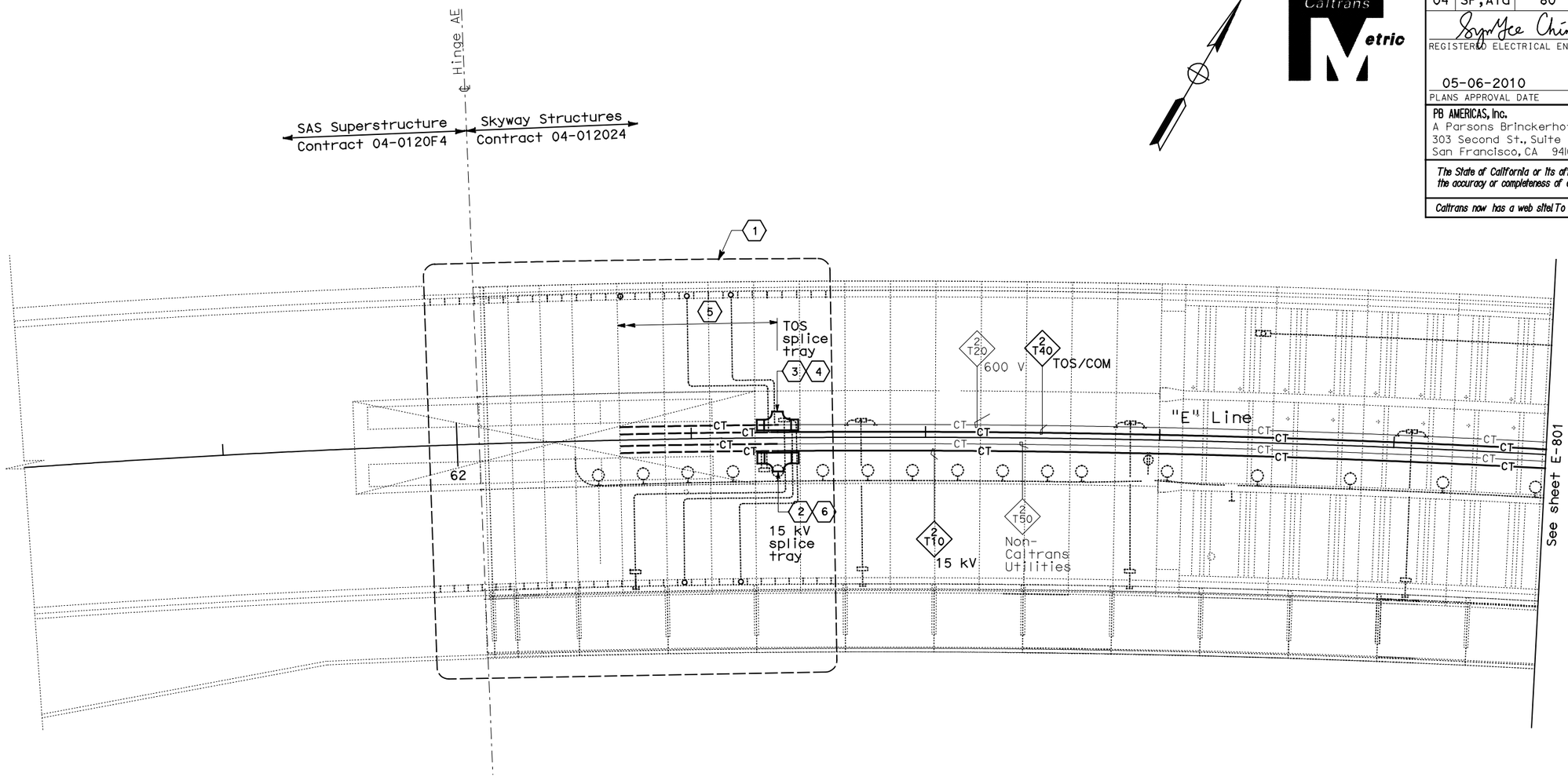

CONDUIT AND CABLE TRAY PLAN

NOTES:

1. This plan sheet is a record drawing from Skyway Structures contract. The Contractor shall verify the existing installation. See sheet EE-81 of Skyway Structures Contract No. 04-012024.
2. The installed components shall not be limited to the ones listed below, but shall be a complete installation. For details, see Bridge Structures Girder Eastbound, typical Details sheets.
   - Furnish and install 15 kV cables into existing cable tray shown on this drawing. Refer to riser diagram on E-837.
   - Furnish and install TOS fiber optic cables into existing cable tray shown on this drawing. Refer to riser diagram on E-983.
   - Inspect for system ground continuity. See sheets E-839 and E-840.
3. All cable trays shown on this drawing are existing, unless otherwise noted. Bold ones are to be used for pulling cable. See sheet note ⟨5⟩.

SHEET NOTES:

⟨1⟩ For Hinge AE area details, see sheet E-819.

⟨2⟩ Furnish and install splice cable tray as shown on sheet E-836, plan detail 1.

⟨3⟩ Furnish and install splice cable tray as shown on sheet E-836, plan detail 2.

⟨4⟩ Contractor to evaluate possibility of eliminating this TOS splice at this location to meet overall design intent. Refer to TOS drawings for further details.

⟨5⟩ Contractor to complete the installation of 15 kV, Non-Caltrans Utilities, TOS, and 600 V cable trays to facilitate installations of cables.

⟨6⟩ Contractor shall splice 15 kV cable to make tie-in to 15 kV cable in SAS Superstructure.

REQUEST FOR INFORMATION NOT ADDRESSED IN THIS CCO REMAIN IN FORCE

MARK	DATE	DESCRIPTIONS	BY	CH'D	CCO#
		REVISIONS			
0	03/08/10	MEP INTEGRATION	SYC	FW	110

CONTRACT CHANGE ORDER NO._____
SHEET_____ OF _____

BRIDGE STRUCTURES GIRDER EASTBOUND
SKYWAY STRUCTURES
SCALE: 1:200

E-800

CALCULATED/ DESIGNED BY	SYC	DATE 01/10	REVISED BY
CHECKED BY	FW	01/10	DATE REVISED

DESIGN OVERSIGHT
BEHZAD GOLEMOHAMMADI

STATE OF CALIFORNIA - DEPARTMENT OF TRANSPORTATION
Caltrans

THIS PLAN ACCURATE FOR ELECTRICAL WORK ONLY.

ALL DIMENSIONS ARE IN METERS UNLESS OTHERWISE SHOWN

FOR REDUCED PLANS ORIGINAL SCALE IS IN MILLIMETERS 0 20 40 60 80

DGN FILE =>04-0120f1_E-800.dgn
USERNAME =>llorico

CU 04251

EA 0120F1

LAST REVISION 00-00-00
DATE PLOTTED => 25-MAY-2010
TIME PLOTTED => 11:17

DIST	COUNTY	ROUTE	KILOMETER POST TOTAL PROJECT	SHEET No	TOTAL SHEETS
04	SF, Ala	80	12.2/14.3 0.0/4.0	407a 08S02	1204

Syn Yee Chin 03/08/10
REGISTERED ELECTRICAL ENGINEER DATE

05-06-2010
PLANS APPROVAL DATE

REGISTERED PROFESSIONAL ENGINEER
SYN YEE CHIN
No. 18186
Exp. 09/30/2011
ELECTRICAL
STATE OF CALIFORNIA

PB AMERICAS, Inc.
A Parsons Brinckerhoff Company
303 Second St., Suite 700N
San Francisco, CA 94107-1317

The State of California or its officers or agents shall not be responsible for the accuracy or completeness of electronic copies of this plan sheet.

Caltrans now has a web site! To get to the web site, go to http://www.dot.ca.gov

Caltrans Metric

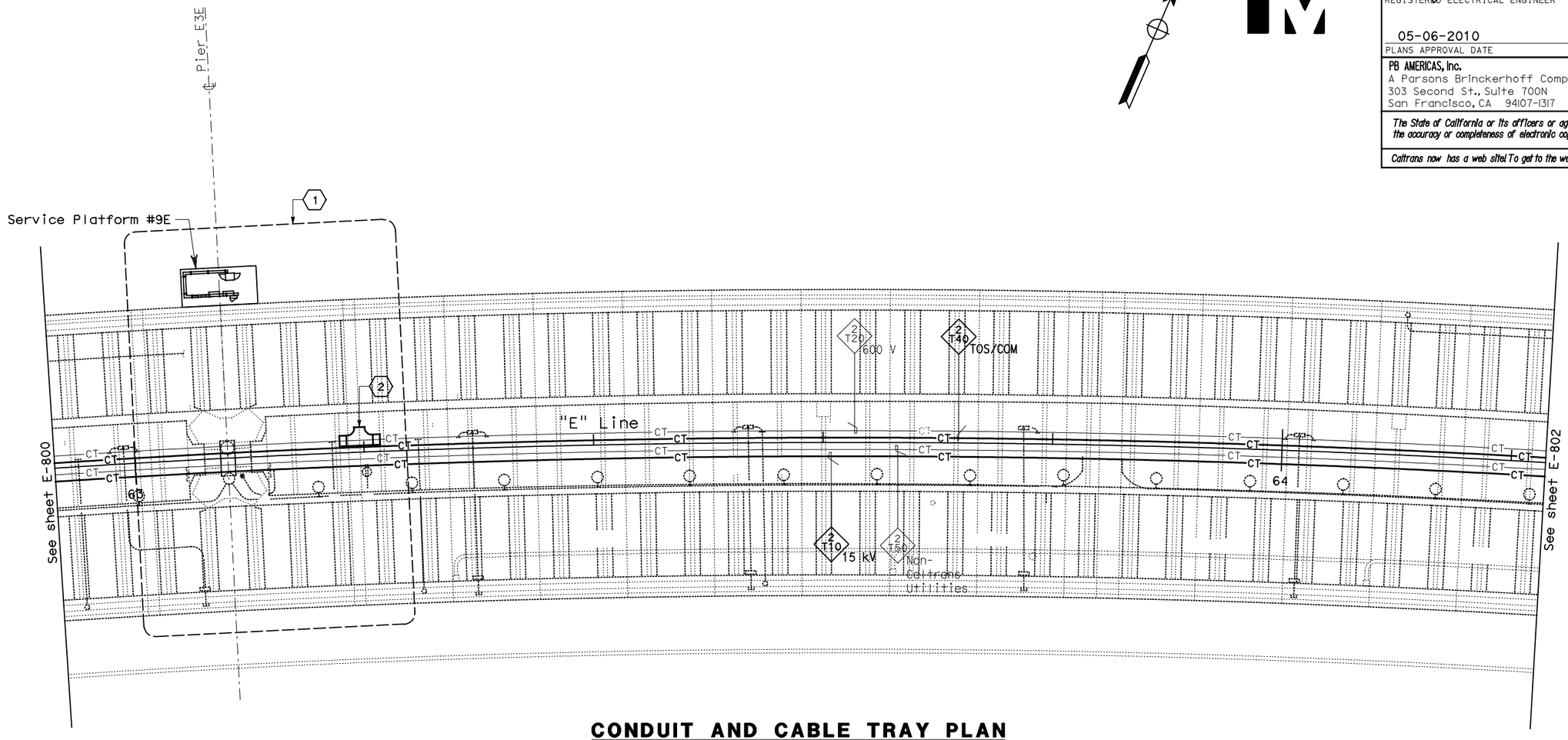

CONDUIT AND CABLE TRAY PLAN

NOTES:

1. This plan sheet is a record drawing from Skyway Structures contract. The Contractor shall verify the existing installation. See sheet EE-82 of Skyway Structures Contract No. 04-012024.
2. The installed components shall not be limited to the ones listed below, but shall be a complete installation. For details, see Bridge Structures Girder Eastbound, typical Details sheets.
   - Furnish and install 15 kV cables into existing cable tray shown on this drawing. Refer to riser diagram on E-837.
   - Furnish and install TOS fiber optic cables into existing cable tray shown on this drawing. Refer to riser diagram on E-983.
   - Inspect for system ground continuity. See sheets E-839 and E-840.
3. All cable trays shown on this drawing are existing. Bold ones are to be used for pulling cable.

SHEET NOTES:

(1) For Service Platform #9E details, see sheet E-820.

(2) Furnish and install splice cable tray as shown on sheet E-836, plan detail 2.

REQUEST FOR INFORMATION NOT ADDRESSED IN THIS CCO REMAIN IN FORCE

MARK	DATE	DESCRIPTIONS	BY	CH'D	CCO#
		REVISIONS			
0	03/08/10	MEP INTEGRATION	SYC	FW	110

CONTRACT CHANGE ORDER NO._____
SHEET _____ OF _____

BRIDGE STRUCTURES GIRDER EASTBOUND
SKYWAY STRUCTURES
SCALE: 1:200

E-801

THIS PLAN ACCURATE FOR ELECTRICAL WORK ONLY.

ALL DIMENSIONS ARE IN METERS UNLESS OTHERWISE SHOWN

FOR REDUCED PLANS ORIGINAL SCALE IS IN MILLIMETERS 0 20 40 60 80

DGN FILE =>04-0120f1_E-801.dgn
USERNAME =>llorico

CU 04251

EA 0120F1

DESIGN OVERSIGHT BEHZAD GOLEMOHAMMADI

CALCULATED/DESIGNED BY SYC
CHECKED BY FW

MARK	DATE	REVISED BY
0	01/10	DATE REVISED

STATE OF CALIFORNIA - DEPARTMENT OF TRANSPORTATION
Caltrans

LAST REVISION 00-00-00
DATE PLOTTED => 25-MAY-2010
TIME PLOTTED => 11:17

DIST	COUNTY	ROUTE	KILOMETER POST TOTAL PROJECT	SHEET No	TOTAL SHEETS
04	SF, Ala	80	12.2/14.3 0.0/4.0	407a 08S03	1204

Caltrans Metric

Syn Yee Chin 03/08/10
REGISTERED ELECTRICAL ENGINEER DATE

05-06-2010
PLANS APPROVAL DATE

REGISTERED PROFESSIONAL ENGINEER
SYN YEE CHIN
No. 18186
Exp. 09/30/2011
ELECTRICAL
STATE OF CALIFORNIA

PB AMERICAS, Inc.
A Parsons Brinckerhoff Company
303 Second St., Suite 700N
San Francisco, CA 94107-1317

The State of California or its officers or agents shall not be responsible for the accuracy or completeness of electronic copies of this plan sheet.

Caltrans now has a web site! To get to the web site, go to http://www.dot.ca.gov

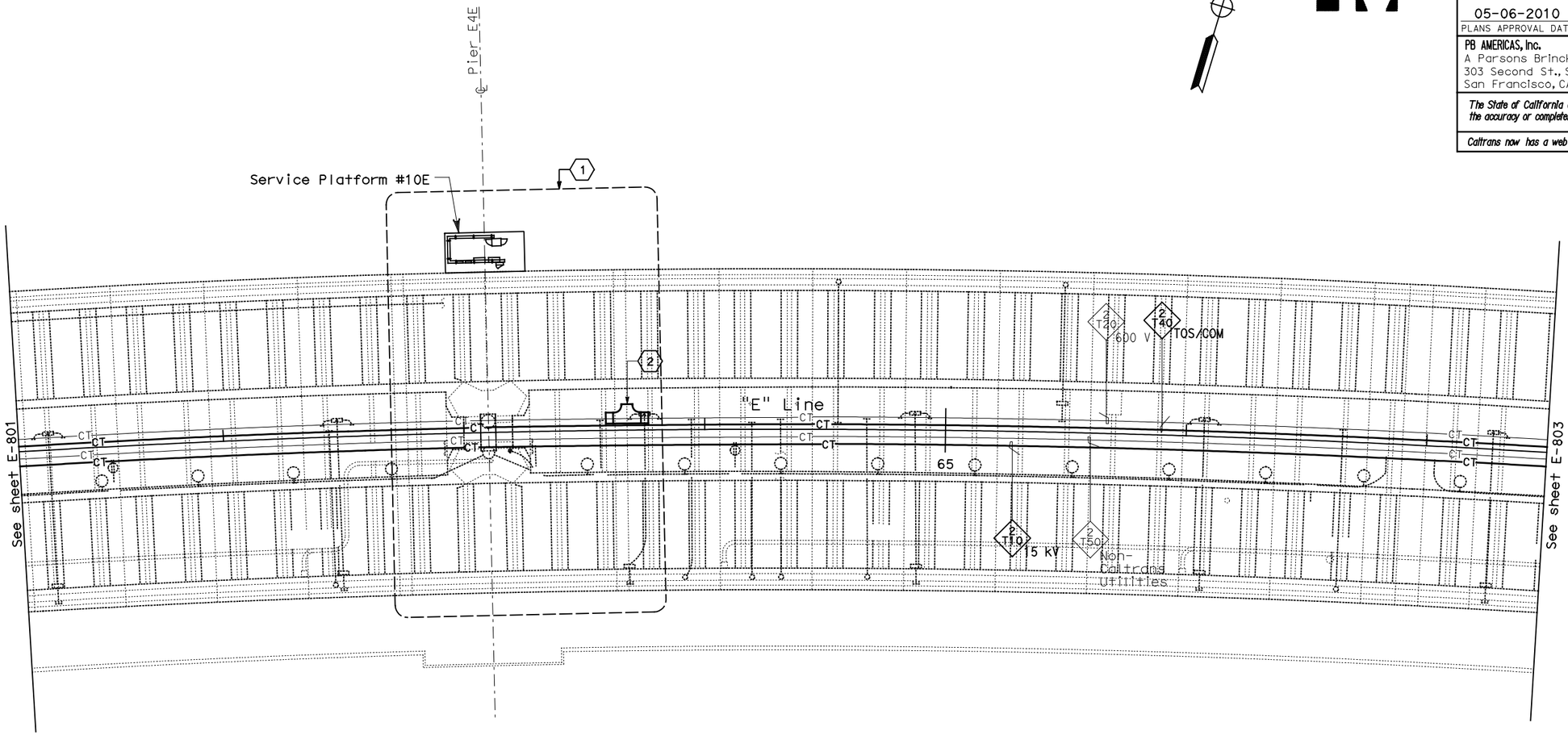

CONDUIT AND CABLE TRAY PLAN

NOTES:

1. This plan sheet is a record drawing from Skyway Structures contract. The Contractor shall verify the existing installation. See sheet EE-83 of Skyway Structures Contract No. 04-012024.
2. The installed components shall not be limited to the ones listed below, but shall be a complete installation. For details, see Bridge Structures Girder Eastbound, typical Details sheets.
   - Furnish and install 15 kV cables into existing cable tray shown on this drawing. Refer to riser diagram on E-837.
   - Furnish and install TOS fiber optic cables into existing cable tray shown on this drawing. Refer to riser diagram on E-983.
   - Inspect for system ground continuity. See sheets E-839 and E-840.
3. All cable trays shown on this drawing are existing. Bold ones are to be used for pulling cable.

SHEET NOTES:

(1) For Service Platform #10E details, see sheet E-821.

(2) Furnish and install splice cable tray as shown on sheet E-836, plan detail 2.

REQUEST FOR INFORMATION NOT ADDRESSED IN THIS CCO REMAIN IN FORCE

MARK	DATE	DESCRIPTIONS	BY	CH'D	CCO#
		REVISIONS			
0	03/08/10	MEP INTEGRATION	SYC	FW	110

CONTRACT CHANGE ORDER NO._____
SHEET _____ OF _____

BRIDGE STRUCTURES GIRDER EASTBOUND
SKYWAY STRUCTURES
SCALE: 1:200

E-802

THIS PLAN ACCURATE FOR ELECTRICAL WORK ONLY.

ALL DIMENSIONS ARE IN METERS UNLESS OTHERWISE SHOWN

FOR REDUCED PLANS ORIGINAL SCALE IS IN MILLIMETERS 0 20 40 60 80

DGN FILE =>04-0120f1_E-802.dgn
USERNAME =>llorico

CU 04251

EA 0120F1

DESIGN OVERSIGHT
BEHZAD GOLEMOHAMMADI

STATE OF CALIFORNIA - DEPARTMENT OF TRANSPORTATION
Caltrans

CALCULATED/DESIGNED BY
CHECKED BY
SYC
FW
DATE 01/10
01/10
REVISED BY
DATE REVISED

LAST REVISION 00-00-00
DATE PLOTTED => 25-MAY-2010
TIME PLOTTED => 11:17

DIST	COUNTY	ROUTE	KILOMETER POST TOTAL PROJECT	SHEET No	TOTAL SHEETS
04	SF,Ala	80	12.2/14.3 0.0/4.0	407a 08S04	1204

Caltrans Metric

Syn Yee Chin 03/08/10
REGISTERED ELECTRICAL ENGINEER DATE

05-06-2010
PLANS APPROVAL DATE

REGISTERED PROFESSIONAL ENGINEER SYN YEE CHIN No. 18186 Exp. 09/30/2011 ELECTRICAL STATE OF CALIFORNIA

PB AMERICAS, Inc.
A Parsons Brinckerhoff Company
303 Second St., Suite 700N
San Francisco, CA 94107-1317

The State of California or its officers or agents shall not be responsible for the accuracy or completeness of electronic copies of this plan sheet.

Caltrans now has a web site! To get to the web site, go to http://www.dot.ca.gov

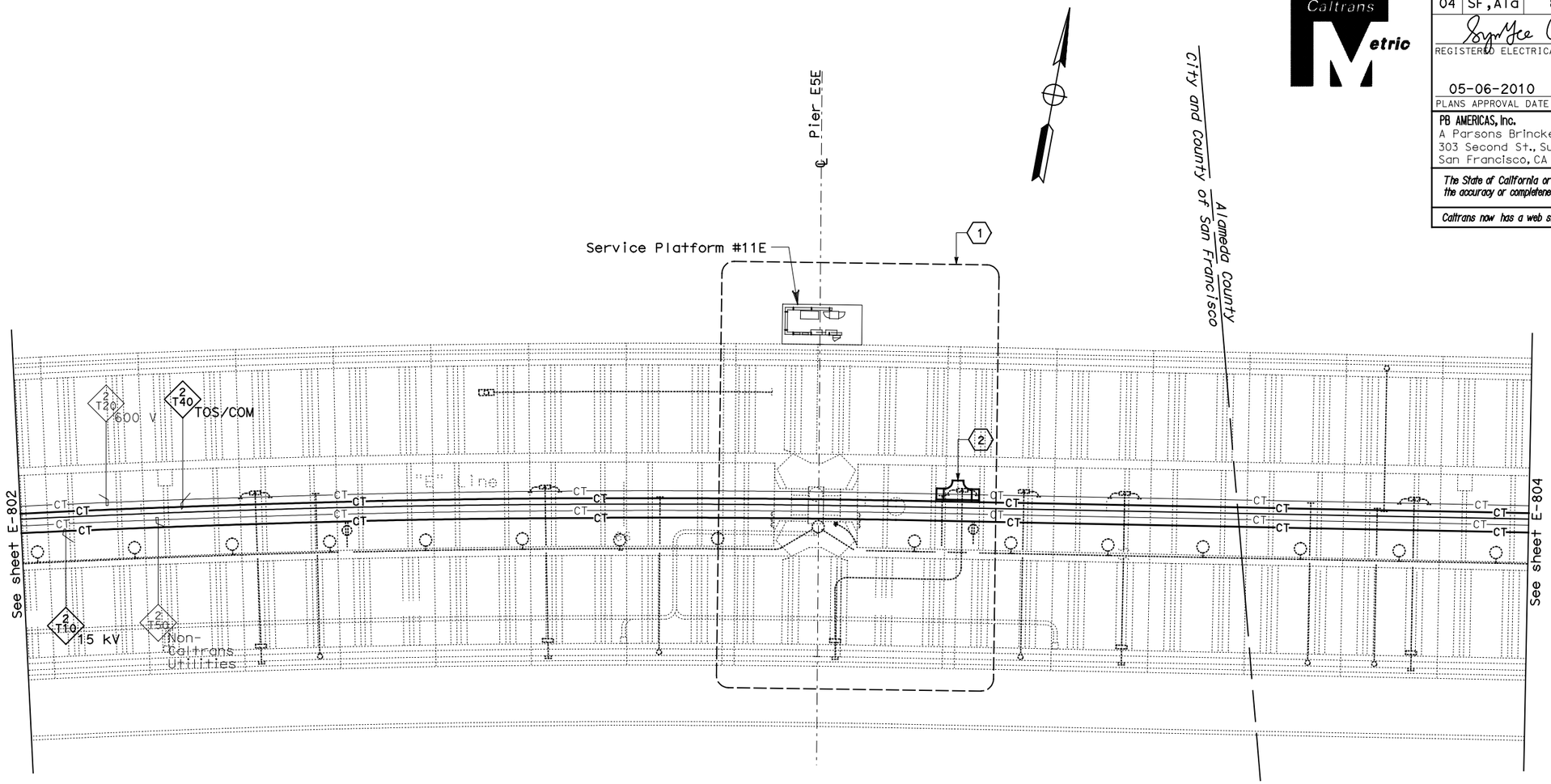

CONDUIT AND CABLE TRAY PLAN

NOTES:

1. This plan sheet is a record drawing from Skyway Structures contract. The Contractor shall verify the existing installation. See sheet EE-84 of Skyway Structures Contract No. 04-012024.
2. The installed components shall not be limited to the ones listed below, but shall be a complete installation. For details, see Bridge Structures Girder Eastbound, typical Details sheets.
   - Furnish and install 15 kV cables into existing cable tray shown on this drawing. Refer to riser diagram on E-837.
   - Furnish and install TOS fiber optic cables into existing cable tray shown on this drawing. Refer to riser diagram on E-983.
   - Inspect for system ground continuity. See sheets E-839 and E-840.
3. All cable trays shown on this drawing are existing. Bold ones are to be used for pulling cable.

SHEET NOTES:

1. For Service Platform #11E details, see sheet E-822.
2. Furnish and install splice cable tray as shown on sheet E-836, plan detail 2.

REQUEST FOR INFORMATION NOT ADDRESSED IN THIS CCO REMAIN IN FORCE

MARK	DATE	DESCRIPTIONS	BY	CH'D	CCO#
0	01/29/10	MEP INTEGRATION	SYC	FW	110

REVISIONS

CONTRACT CHANGE ORDER NO._____
SHEET _____ OF _____

BRIDGE STRUCTURES GIRDER EASTBOUND
SKYWAY STRUCTURES
SCALE: 1:200

E-803

THIS PLAN ACCURATE FOR ELECTRICAL WORK ONLY.

ALL DIMENSIONS ARE IN METERS UNLESS OTHERWISE SHOWN

FOR REDUCED PLANS ORIGINAL SCALE IS IN MILLIMETERS 0 20 40 60 80

DGN FILE =>04-0120f1_E-803.dgn
USERNAME =>llorico

CU 04251 EA 0120F1

STATE OF CALIFORNIA - DEPARTMENT OF TRANSPORTATION
Caltrans

DESIGN OVERSIGHT: BEHZAD GOLEMOHAMMADI

CALCULATED/DESIGNED BY: SYC DATE 01/10 REVISED BY
CHECKED BY: FW 01/10 DATE REVISED

LAST REVISION 00-00-00
DATE PLOTTED => 25-MAY-2010
TIME PLOTTED => 11:17

DIST	COUNTY	ROUTE	KILOMETER POST TOTAL PROJECT	SHEET No	TOTAL SHEETS
04	SF, Ala	80	12.2/14.3 0.0/4.0	407a 08S05	1204

Syn Yee Chin 03/08/10
REGISTERED ELECTRICAL ENGINEER DATE

SYN YEE CHIN
No. 18186
Exp. 09/30/2011
ELECTRICAL
REGISTERED PROFESSIONAL ENGINEER
STATE OF CALIFORNIA

05-06-2010
PLANS APPROVAL DATE

PB AMERICAS, Inc.
A Parsons Brinckerhoff Company
303 Second St., Suite 700N
San Francisco, CA 94107-1317

The State of California or its officers or agents shall not be responsible for the accuracy or completeness of electronic copies of this plan sheet.

Caltrans now has a web site! To get to the web site, go to http://www.dot.ca.gov

Caltrans Metric

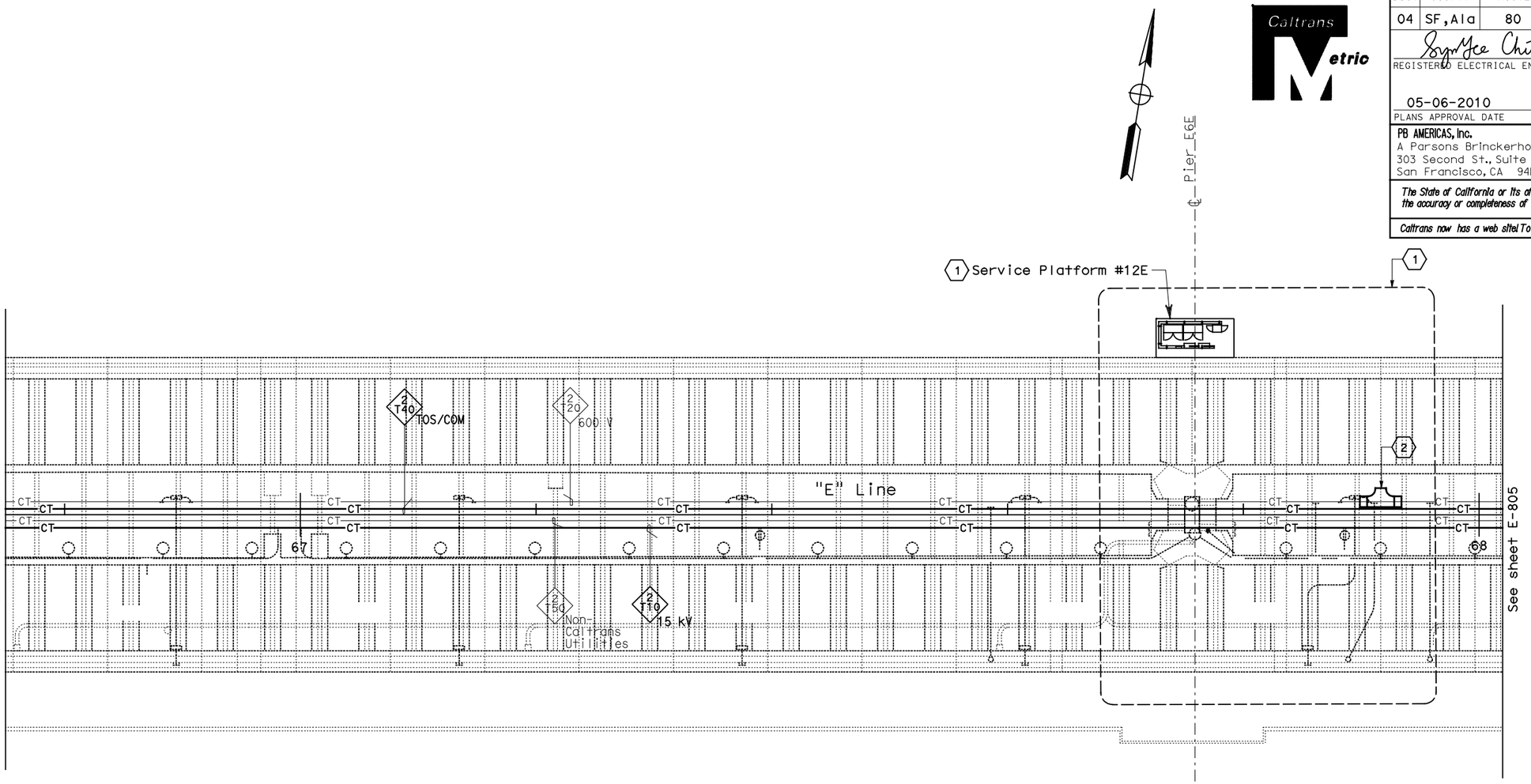

CONDUIT AND CABLE TRAY PLAN

NOTES:

1. This plan sheet is a record drawing from Skyway Structures contract. The Contractor shall verify the existing installation. See sheet EE-85 of Skyway Structures Contract No. 04-012024.
2. The installed components shall not be limited to the ones listed below, but shall be a complete installation. For details, see Bridge Structures Girder Eastbound, typical Details sheets.
   - Furnish and install 15 kV cables into existing cable tray shown on this drawing. Refer to riser diagram on E-837.
   - Furnish and install TOS fiber optic cables into existing cable tray shown on this drawing. Refer to riser diagram on E-983.
   - Inspect for system ground continuity. See sheets E-839 and E-840.
3. All cable trays shown on this drawing are existing. Bold ones are to be used for pulling cable.

SHEET NOTES:

(1) For Service Platform #12E details, see sheet E-823.

(2) Furnish and install splice cable tray as shown on sheet E-836, plan detail 2.

REQUEST FOR INFORMATION NOT ADDRESSED IN THIS CCO REMAIN IN FORCE

MARK	DATE	DESCRIPTIONS	BY	CH'D	CCO#
		REVISIONS			
0	03/08/10	MEP INTEGRATION	SYC	FW	110

CONTRACT CHANGE ORDER NO._____
SHEET _____ OF _____

BRIDGE STRUCTURES GIRDER EASTBOUND
SKYWAY STRUCTURES
SCALE: 1:200

E-804

CALCULATED/ DESIGNED BY	SYC	DATE 01/10	REVISED BY
CHECKED BY	FW	01/10	DATE REVISED

DESIGN OVERSIGHT
BEHZAD GOLEMOHAMMADI

STATE OF CALIFORNIA - DEPARTMENT OF TRANSPORTATION
Caltrans

LAST REVISION 00-00-00
DATE PLOTTED => 25-MAY-2010
TIME PLOTTED => 11:17

THIS PLAN ACCURATE FOR ELECTRICAL WORK ONLY.

ALL DIMENSIONS ARE IN METERS UNLESS OTHERWISE SHOWN

FOR REDUCED PLANS ORIGINAL SCALE IS IN MILLIMETERS 0 20 40 60 80

DGN FILE =>04-0120f1_E-804.dgn
USERNAME =>llorico

CU 04251

EA 0120F1

DIST	COUNTY	ROUTE	KILOMETER POST TOTAL PROJECT	SHEET No	TOTAL SHEETS
04	SF, Ala	80	12.2/14.3 0.0/4.0	407a 08S06	1204

Caltrans Metric

Syn Yee Chin 03/08/10
REGISTERED ELECTRICAL ENGINEER DATE

REGISTERED PROFESSIONAL ENGINEER
SYN YEE CHIN
No. 18186
Exp. 09/30/2011
ELECTRICAL
STATE OF CALIFORNIA

05-06-2010
PLANS APPROVAL DATE

PB AMERICAS, Inc.
A Parsons Brinckerhoff Company
303 Second St., Suite 700N
San Francisco, CA 94107-1317

The State of California or its officers or agents shall not be responsible for the accuracy or completeness of electronic copies of this plan sheet.

Caltrans now has a web site! To get to the web site, go to http://www.dot.ca.gov

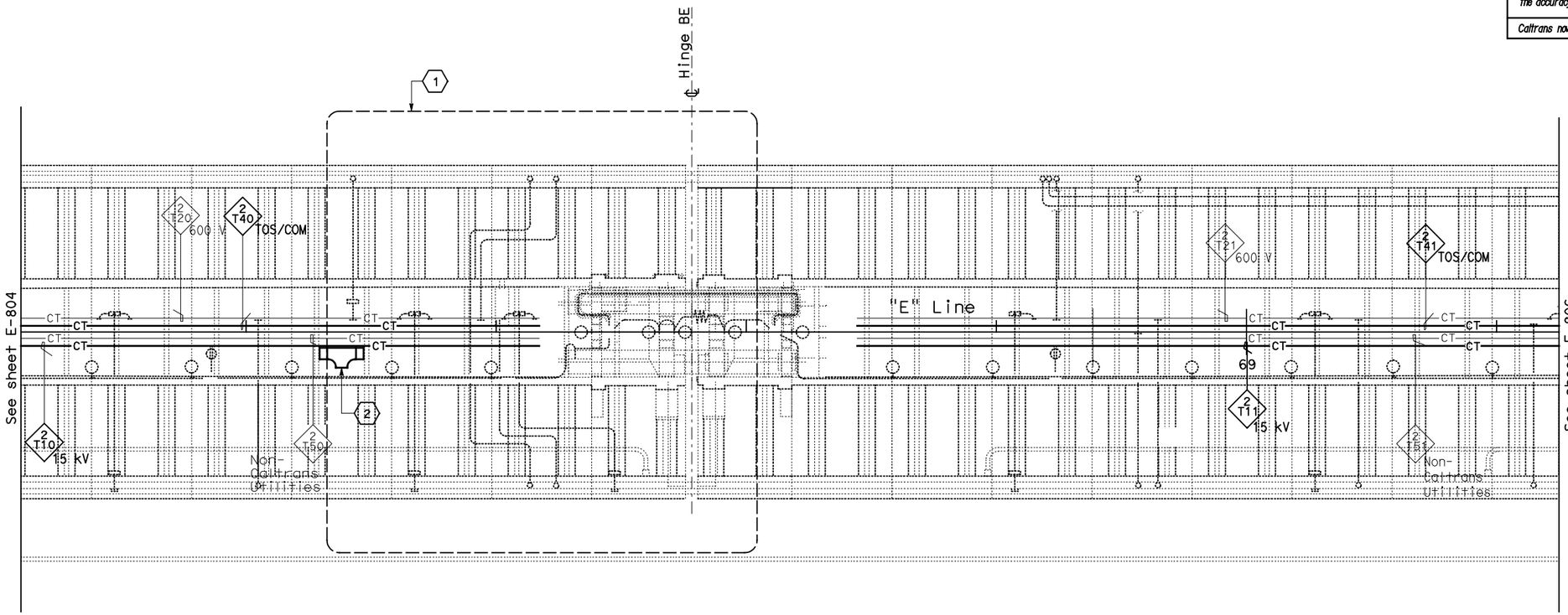

CONDUIT AND CABLE TRAY PLAN

NOTES:

1. This plan sheet is a record drawing from Skyway Structures contract. The Contractor shall verify the existing installation. See sheet EE-86 of Skyway Structures Contract No. 04-012024.
2. The installed components shall not be limited to the ones listed below, but shall be a complete installation. For details, see Bridge Structures Girder Eastbound, typical Details sheets.
   - Furnish and install 15 kV cables into existing cable tray shown on this drawing. Refer to riser diagram on E-837.
   - Furnish and install TOS fiber optic cables into existing cable tray shown on this drawing. Refer to riser diagram on E-983.
   - Inspect for system ground continuity. See sheets E-839 and E-840.
3. All cable trays shown on this drawing are existing. Bold ones are to be used for pulling cable.

SHEET NOTES:

(1) For Hinge BE area details, see sheet E-823A.

(2) Furnish and install splice cable tray as shown on sheet E-836, plan detail 1.

REQUEST FOR INFORMATION NOT ADDRESSED IN THIS CCO REMAIN IN FORCE

MARK	DATE	DESCRIPTIONS (REVISIONS)	BY	CH'D	CCO#
0	03/08/10	MEP INTEGRATION	SYC	FW	110

CONTRACT CHANGE ORDER NO._____
SHEET_____ OF _____

BRIDGE STRUCTURES GIRDER EASTBOUND
SKYWAY STRUCTURES
SCALE: 1:200

E-805

DESIGN OVERSIGHT
BEHZAD GOLEMOHAMMADI

STATE OF CALIFORNIA - DEPARTMENT OF TRANSPORTATION
Caltrans

	CALCULATED/ DESIGNED BY	SYC	DATE 01/10	REVISED BY
	CHECKED BY	FW	01/10	DATE REVISED

THIS PLAN ACCURATE FOR ELECTRICAL WORK ONLY.

ALL DIMENSIONS ARE IN METERS UNLESS OTHERWISE SHOWN

FOR REDUCED PLANS ORIGINAL SCALE IS IN MILLIMETERS 0 20 40 60 80

DGN FILE =>04-0120f1_E-805.dgn
USERNAME =>llorico

CU 04251

EA 0120F1

LAST REVISION 00-00-00
DATE PLOTTED => 25-MAY-2010
TIME PLOTTED => 11:18

DIST	COUNTY	ROUTE	KILOMETER POST TOTAL PROJECT	SHEET No	TOTAL SHEETS
04	SF, Ala	80	12.2/14.3 0.0/4.0	407a 08S07	1204

Syn Yee Chin 03/08/10
REGISTERED ELECTRICAL ENGINEER DATE

05-06-2010
PLANS APPROVAL DATE

REGISTERED PROFESSIONAL ENGINEER
SYN YEE CHIN
No. 18186
Exp. 09/30/2011
ELECTRICAL
STATE OF CALIFORNIA

PB AMERICAS, Inc.
A Parsons Brinckerhoff Company
303 Second St., Suite 700N
San Francisco, CA 94107-1317

The State of California or its officers or agents shall not be responsible for the accuracy or completeness of electronic copies of this plan sheet.

Caltrans now has a web site! To get to the web site, go to http://www.dot.ca.gov

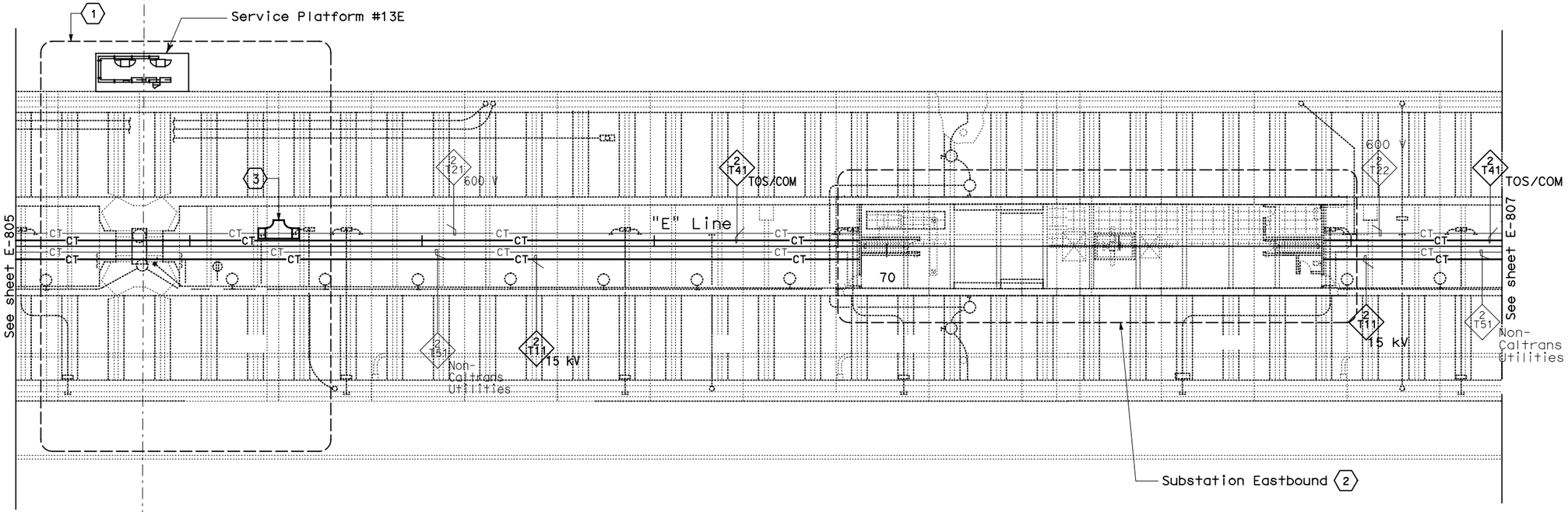

CONDUIT AND CABLE TRAY PLAN

NOTES:

1. This plan sheet is a record drawing from Skyway Structures contract. The Contractor shall verify the existing installation. See sheet EE-87 of Skyway Structures Contract No. 04-012024.
2. The installed components shall not be limited to the ones listed below, but shall be a complete installation. For details, see Bridge Structures Girder Eastbound, typical Details sheets.
   - Furnish and install 15 kV cables into existing cable tray shown on this drawing. Refer to riser diagram on E-837.
   - Furnish and install TOS fiber optic cables into existing cable tray shown on this drawing. Refer to riser diagram on E-983.
   - Inspect for system ground continuity. See sheets E-839 and E-840.
3. All cable trays shown on this drawing are existing. Bold ones are to be used for pulling cable.

SHEET NOTES:

1. For Service Platform #13E details, see sheet E-824.
2. For Substation Eastbound details, see sheet E-826.
3. Furnish and install splice cable tray as shown on sheet E-836, plan detail 2.

REQUEST FOR INFORMATION NOT ADDRESSED IN THIS CCO REMAIN IN FORCE

MARK	DATE	DESCRIPTIONS	BY	CH'D	CCO#
		REVISIONS			
0	03/08/10	MEP INTEGRATION	SYC	FW	110

CONTRACT CHANGE ORDER NO._____
SHEET _____ OF _____

BRIDGE STRUCTURES GIRDER EASTBOUND
SKYWAY STRUCTURES
SCALE: 1:200

E-806

THIS PLAN ACCURATE FOR ELECTRICAL WORK ONLY.

ALL DIMENSIONS ARE IN METERS UNLESS OTHERWISE SHOWN

FOR REDUCED PLANS ORIGINAL SCALE IS IN MILLIMETERS 0 20 40 60 80

DGN FILE =>04-0120f1_E-806.dgn
USERNAME =>llorico

CU 04251

EA 0120F1

DESIGN OVERSIGHT
BEHZAD GOLEMOHAMMADI

STATE OF CALIFORNIA - DEPARTMENT OF TRANSPORTATION
Caltrans

CALCULATED/ DESIGNED BY	SYC	DATE 01/10	REVISED BY
CHECKED BY	FW	01/10	DATE REVISED

LAST REVISION 00-00-00
DATE PLOTTED => 25-MAY-2010
TIME PLOTTED => 11:18

DIST	COUNTY	ROUTE	KILOMETER POST TOTAL PROJECT	SHEET No	TOTAL SHEETS
04	SF, Ala	80	12.2/14.3 0.0/4.0	407a 08S08	1204

Syn Yee Chin 03/08/10
REGISTERED ELECTRICAL ENGINEER DATE

05-06-2010
PLANS APPROVAL DATE

REGISTERED PROFESSIONAL ENGINEER
SYN YEE CHIN
No. 18186
Exp. 09/30/2011
ELECTRICAL
STATE OF CALIFORNIA

PB AMERICAS, Inc.
A Parsons Brinckerhoff Company
303 Second St., Suite 700N
San Francisco, CA 94107-1317

The State of California or its officers or agents shall not be responsible for the accuracy or completeness of electronic copies of this plan sheet.

Caltrans now has a web site! To get to the web site, go to http://www.dot.ca.gov

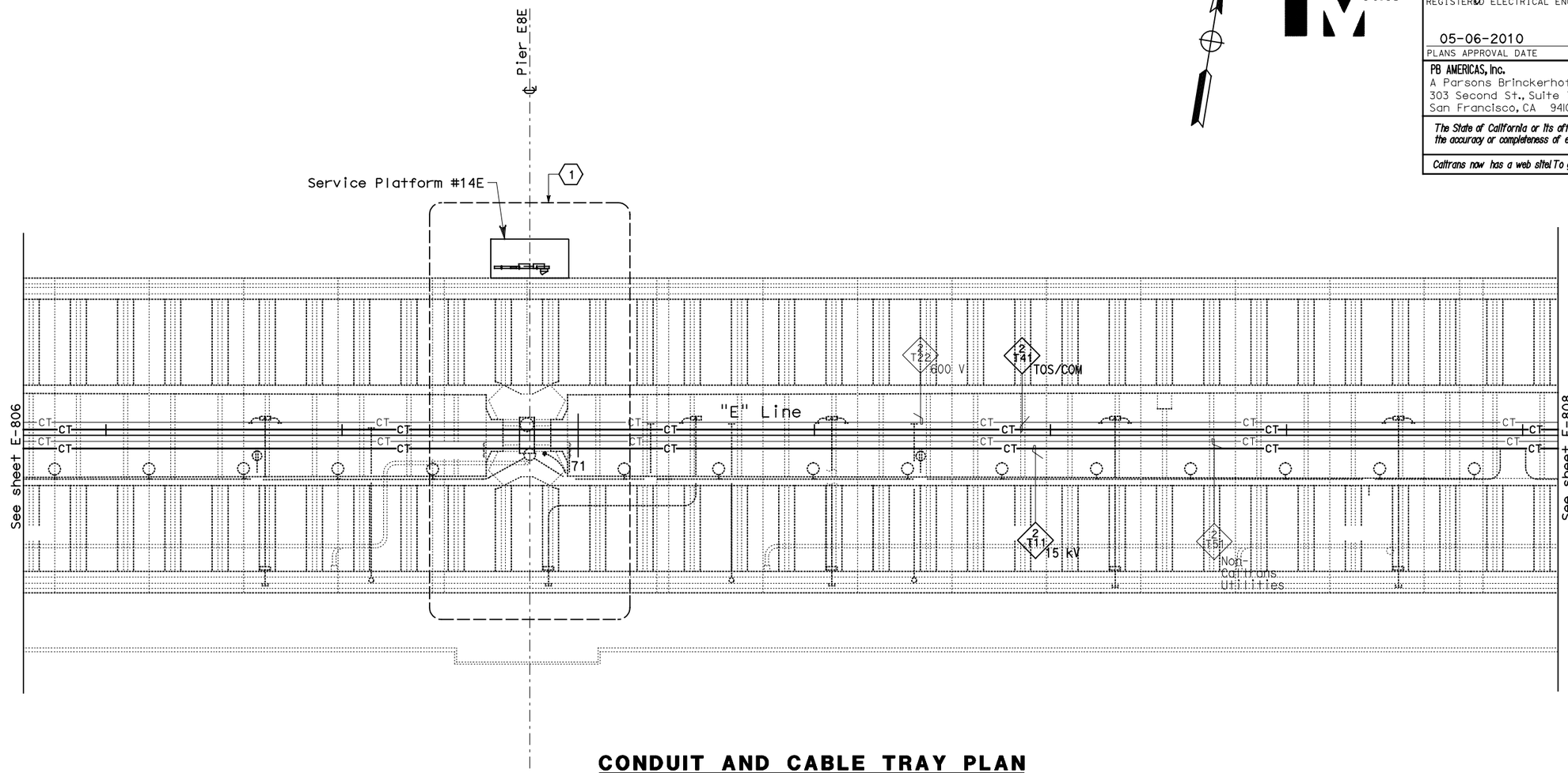

CONDUIT AND CABLE TRAY PLAN

NOTES:

1. This plan sheet is a record drawing from Skyway Structures contract. The Contractor shall verify the existing installation. See sheet EE-88 of Skyway Structures Contract No. 04-012024.
2. The installed components shall not be limited to the ones listed below, but shall be a complete installation. For details, see Bridge Structures Girder Eastbound, typical Details sheets.
   - Furnish and install 15 kV cables into existing cable tray shown on this drawing. Refer to riser diagram on E-837.
   - Furnish and install TOS fiber optic cables into existing cable tray shown on this drawing. Refer to riser diagram on E-983.
   - Inspect for system ground continuity. See sheets E-839 and E-840.
3. All cable trays shown on this drawing are existing. Bold ones are to be used for pulling cable.

SHEET NOTES:

(1) For Service Platform #14E details, see sheet E-827.

REQUEST FOR INFORMATION NOT ADDRESSED IN THIS CCO REMAIN IN FORCE					
0	03/08/10	MEP INTEGRATION	SYC	FW	110
MARK	DATE	DESCRIPTIONS	BY	CH'D	CCO#
REVISIONS					

CONTRACT CHANGE ORDER NO._____
SHEET _____ OF _____

BRIDGE STRUCTURES GIRDER EASTBOUND
SKYWAY STRUCTURES
SCALE: 1:200

E-807

THIS PLAN ACCURATE FOR ELECTRICAL WORK ONLY.

ALL DIMENSIONS ARE IN METERS UNLESS OTHERWISE SHOWN

FOR REDUCED PLANS ORIGINAL SCALE IS IN MILLIMETERS 0 20 40 60 80

DGN FILE =>04-0120f1_E-807.dgn
USERNAME =>llorico

CU 04251

EA 0120F1

DESIGN OVERSIGHT
BEHZAD GOLEMOHAMMADI

CALCULATED/DESIGNED BY
CHECKED BY

DATE	BY	DATE REVISED	REVISED BY
01/10	SYC	01/10	FW

STATE OF CALIFORNIA - DEPARTMENT OF TRANSPORTATION
Caltrans

LAST REVISION 00-00-00
DATE PLOTTED => 25-MAY-2010
TIME PLOTTED => 11:18

DIST	COUNTY	ROUTE	KILOMETER POST TOTAL PROJECT	SHEET No	TOTAL SHEETS
04	SF, Ala	80	12.2/14.3 0.0/4.0	407a 08S09	1204

Caltrans Metric

Syn Yee Chin 03/08/10
REGISTERED ELECTRICAL ENGINEER DATE

REGISTERED PROFESSIONAL ENGINEER
SYN YEE CHIN
No. 18186
Exp. 09/30/2011
ELECTRICAL
STATE OF CALIFORNIA

05-06-2010
PLANS APPROVAL DATE

PB AMERICAS, Inc.
A Parsons Brinckerhoff Company
303 Second St., Suite 700N
San Francisco, CA 94107-1317

The State of California or its officers or agents shall not be responsible for the accuracy or completeness of electronic copies of this plan sheet.

Caltrans now has a web site! To get to the web site, go to http://www.dot.ca.gov

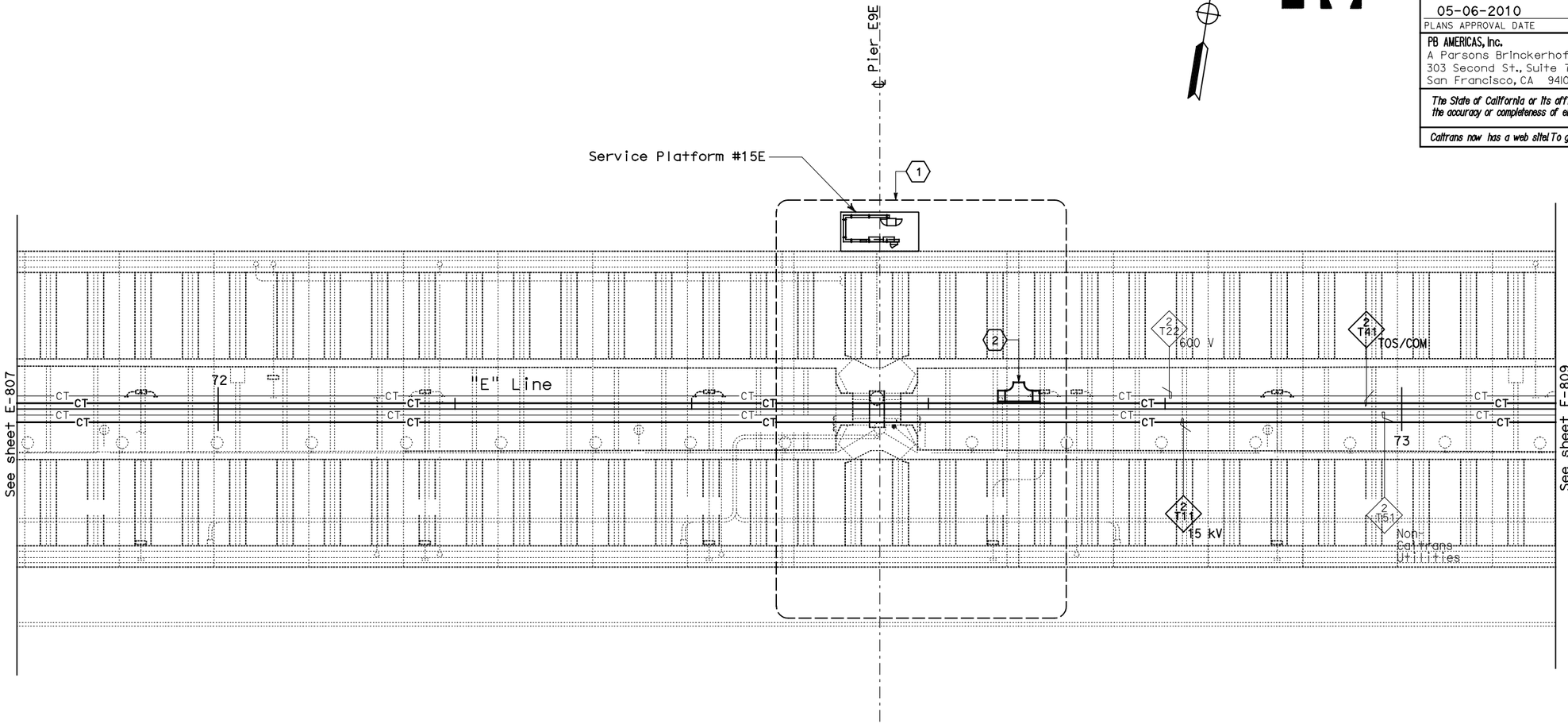

CONDUIT AND CABLE TRAY PLAN

NOTES:

1. This plan sheet is a record drawing from Skyway Structures contract. The Contractor shall verify the existing installation. See sheet EE-89 of Skyway Structures Contract No. 04-012024.
2. The installed components shall not be limited to the ones listed below, but shall be a complete installation. For details, see Bridge Structures Girder Eastbound, typical Details sheets.
   - Furnish and install 15 kV cables into existing cable tray shown on this drawing. Refer to riser diagram on E-837.
   - Furnish and install TOS fiber optic cables into existing cable tray shown on this drawing. Refer to riser diagram on E-983.
   - Inspect for system ground continuity. See sheets E-839 and E-840.
3. All cable trays shown on this drawing are existing. Bold ones are to be used for pulling cable.

SHEET NOTES:

(1) For Service Platform #15E details, see sheet E-828.

(2) Furnish and install splice cable tray as shown on sheet E-836, plan detail 2.

REQUEST FOR INFORMATION NOT ADDRESSED IN THIS CCO REMAIN IN FORCE					
MARK	DATE	REVISIONS DESCRIPTIONS	BY	CH'D	CCO#
0	03/08/10	MEP INTEGRATION	SYC	FW	110

CONTRACT CHANGE ORDER NO._____
SHEET _____ OF _____

BRIDGE STRUCTURES GIRDER EASTBOUND
SKYWAY STRUCTURES
SCALE: 1:200

E-808

THIS PLAN ACCURATE FOR ELECTRICAL WORK ONLY.

ALL DIMENSIONS ARE IN METERS UNLESS OTHERWISE SHOWN

FOR REDUCED PLANS ORIGINAL SCALE IS IN MILLIMETERS 0 20 40 60 80

DGN FILE =>04-0120f1_E-808.dgn
USERNAME =>llorico

CU 04251

EA 0120F1

DESIGN OVERSIGHT BEHZAD GOLEMOHAMMADI

CALCULATED/DESIGNED BY SYC
CHECKED BY FW

DATE	REVISED BY
01/10	01/10
	DATE REVISED

STATE OF CALIFORNIA - DEPARTMENT OF TRANSPORTATION Caltrans

LAST REVISION 00-00-00
DATE PLOTTED => 25-MAY-2010
TIME PLOTTED => 11:19

DIST	COUNTY	ROUTE	KILOMETER POST TOTAL PROJECT	SHEET No	TOTAL SHEETS
04	SF, Ala	80	12.2/14.3 0.0/4.0	407a 08S10	1204

Syn Yee Chin 03/08/10
REGISTERED ELECTRICAL ENGINEER DATE

SYN YEE CHIN No. 18186 Exp. 09/30/2011 ELECTRICAL — REGISTERED PROFESSIONAL ENGINEER — STATE OF CALIFORNIA

05-06-2010
PLANS APPROVAL DATE

PB AMERICAS, Inc.
A Parsons Brinckerhoff Company
303 Second St., Suite 700N
San Francisco, CA 94107-1317

The State of California or its officers or agents shall not be responsible for the accuracy or completeness of electronic copies of this plan sheet.

Caltrans now has a web site! To get to the web site, go to http://www.dot.ca.gov

Caltrans Metric

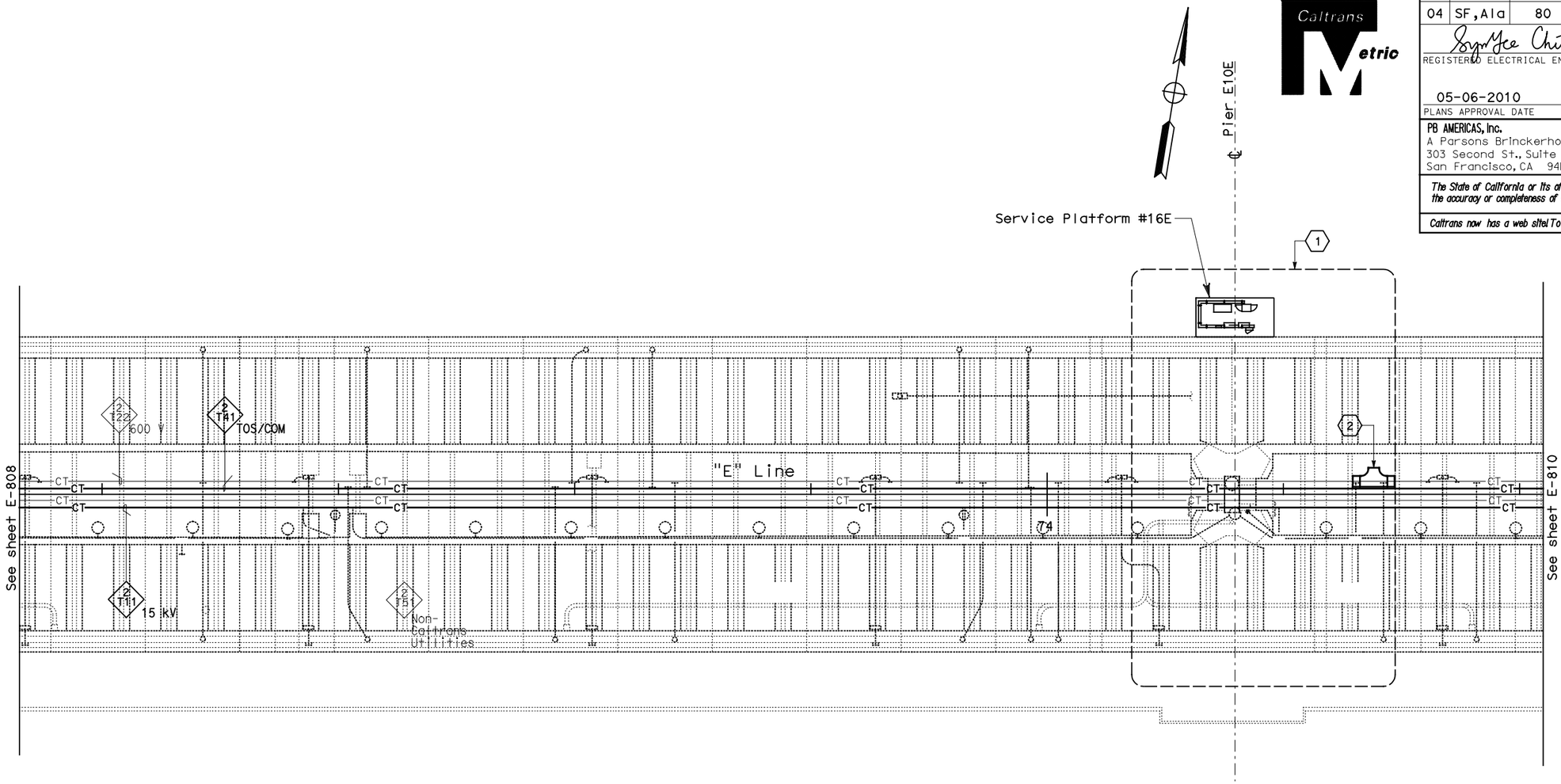

CONDUIT AND CABLE TRAY PLAN

NOTES:

1. This plan sheet is a record drawing from Skyway Structures contract. The Contractor shall verify the existing installation. See sheet EE-90 of Skyway Structures Contract No. 04-012024.
2. The installed components shall not be limited to the ones listed below, but shall be a complete installation. For details, see Bridge Structures Girder Eastbound, typical Details sheets.
   - Furnish and install 15 kV cables into existing cable tray shown on this drawing. Refer to riser diagram on E-837.
   - Furnish and install TOS fiber optic cables into existing cable tray shown on this drawing. Refer to riser diagram on E-983.
   - Inspect for system ground continuity. See sheets E-839 and E-840.
3. All cable trays shown on this drawing are existing. Bold ones are to be used for pulling cable.

SHEET NOTES:

(1) For Service Platform #16E details, see sheet E-829.

(2) Furnish and install splice cable tray as shown on sheet E-836, plan detail 2.

REQUEST FOR INFORMATION NOT ADDRESSED IN THIS CCO REMAIN IN FORCE

MARK	DATE	DESCRIPTIONS	BY	CH'D	CCO#
		REVISIONS			
0	03/08/10	MEP INTEGRATION	SYC	FW	110

CONTRACT CHANGE ORDER NO._____
SHEET _____ OF _____

BRIDGE STRUCTURES GIRDER EASTBOUND
SKYWAY STRUCTURES
SCALE: 1:200

E-809

THIS PLAN ACCURATE FOR ELECTRICAL WORK ONLY.

ALL DIMENSIONS ARE IN METERS UNLESS OTHERWISE SHOWN

FOR REDUCED PLANS ORIGINAL SCALE IS IN MILLIMETERS 0 20 40 60 80

DGN FILE =>04-0120f1_E-809.dgn
USERNAME =>llorico

CU 04251

EA 0120F1

STATE OF CALIFORNIA - DEPARTMENT OF TRANSPORTATION
Caltrans

DESIGN OVERSIGHT: BEHZAD GOLEMOHAMMADI

	CALCULATED/ DESIGNED BY	CHECKED BY
SYC	FW	
DATE 01/10	01/10	
REVISED BY	DATE REVISED	

LAST REVISION 00-00-00
DATE PLOTTED => 06-MAY-2010
TIME PLOTTED => 18:23

DIST	COUNTY	ROUTE	KILOMETER POST TOTAL PROJECT	SHEET No	TOTAL SHEETS
04	SF, Ala	80	12.2/14.3 0.0/4.0	407a 08S11	1204

Caltrans Metric

Syn Yee Chin 03/08/10
REGISTERED ELECTRICAL ENGINEER DATE

05-06-2010
PLANS APPROVAL DATE

REGISTERED PROFESSIONAL ENGINEER
SYN YEE CHIN
No. 18186
Exp. 09/30/2011
ELECTRICAL
STATE OF CALIFORNIA

PB AMERICAS, Inc.
A Parsons Brinckerhoff Company
303 Second St., Suite 700N
San Francisco, CA 94107-1317

The State of California or its officers or agents shall not be responsible for the accuracy or completeness of electronic copies of this plan sheet.

Caltrans now has a web site! To get to the web site, go to http://www.dot.ca.gov

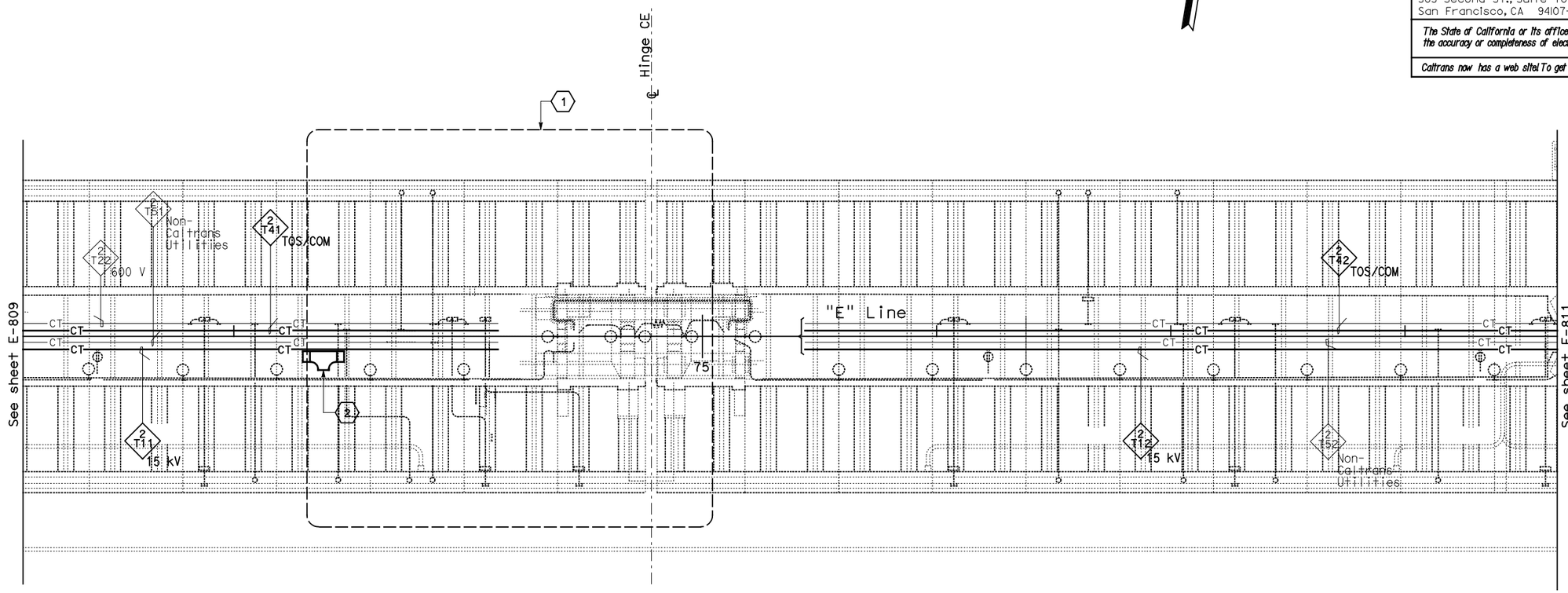

CONDUIT AND CABLE TRAY PLAN

NOTES:

1. This plan sheet is a record drawing from Skyway Structures contract. The Contractor shall verify the existing installation. See sheet EE-91 of Skyway Structures Contract No. 04-012024.
2. The installed components shall not be limited to the ones listed below, but shall be a complete installation. For details, see Bridge Structures Girder Eastbound, typical Details sheets.
   - Furnish and install 15 kV cables into existing cable tray shown on this drawing. Refer to riser diagram on E-837.
   - Furnish and install TOS fiber optic cables into existing cable tray shown on this drawing. Refer to riser diagram on E-983.
   - Inspect for system ground continuity. See sheets E-839 and E-840.
3. All cable trays shown on this drawing are existing. Bold ones are to be used for pulling cable.

SHEET NOTES:

(1) For Hinge CE area details, see sheet E-829A.

(2) Furnish and install splice cable tray as shown on sheet E-836, plan detail 1.

REQUEST FOR INFORMATION NOT ADDRESSED IN THIS CCO REMAIN IN FORCE					
MARK	DATE	REVISIONS	BY	CH'D	CCO#
0	03/08/10	MEP INTEGRATION	SYC	FW	110

CONTRACT CHANGE ORDER NO._____
SHEET _____ OF _____

BRIDGE STRUCTURES GIRDER EASTBOUND
SKYWAY STRUCTURES
SCALE: 1:200

E-810

THIS PLAN ACCURATE FOR ELECTRICAL WORK ONLY.

ALL DIMENSIONS ARE IN METERS UNLESS OTHERWISE SHOWN

FOR REDUCED PLANS ORIGINAL SCALE IS IN MILLIMETERS 0 20 40 60 80

DGN FILE =>04-0120f1_E-810.dgn
USERNAME =>llorico

CU 04251

EA 0120F1

DESIGN OVERSIGHT: BEHZAD GOLEMOHAMMADI

CALCULATED/DESIGNED BY: SYC 01/10
CHECKED BY: FW 01/10

DATE	REVISED BY
01/10	DATE REVISED

STATE OF CALIFORNIA - DEPARTMENT OF TRANSPORTATION
Caltrans

LAST REVISION 00-00-00
DATE PLOTTED => 06-MAY-2010
TIME PLOTTED => 18:23

DIST	COUNTY	ROUTE	KILOMETER POST TOTAL PROJECT	SHEET No	TOTAL SHEETS
04	SF, Ala	80	12.2/14.3 0.0/4.0	407a 08S12	1204

Syn Yee Chin 03/08/10
REGISTERED ELECTRICAL ENGINEER DATE

05-06-2010
PLANS APPROVAL DATE

REGISTERED PROFESSIONAL ENGINEER
SYN YEE CHIN
No. 18186
Exp. 09/30/2011
ELECTRICAL
STATE OF CALIFORNIA

PB AMERICAS, Inc.
A Parsons Brinckerhoff Company
303 Second St., Suite 700N
San Francisco, CA 94107-1317

The State of California or its officers or agents shall not be responsible for the accuracy or completeness of electronic copies of this plan sheet.

Caltrans now has a web site! To get to the web site, go to http://www.dot.ca.gov

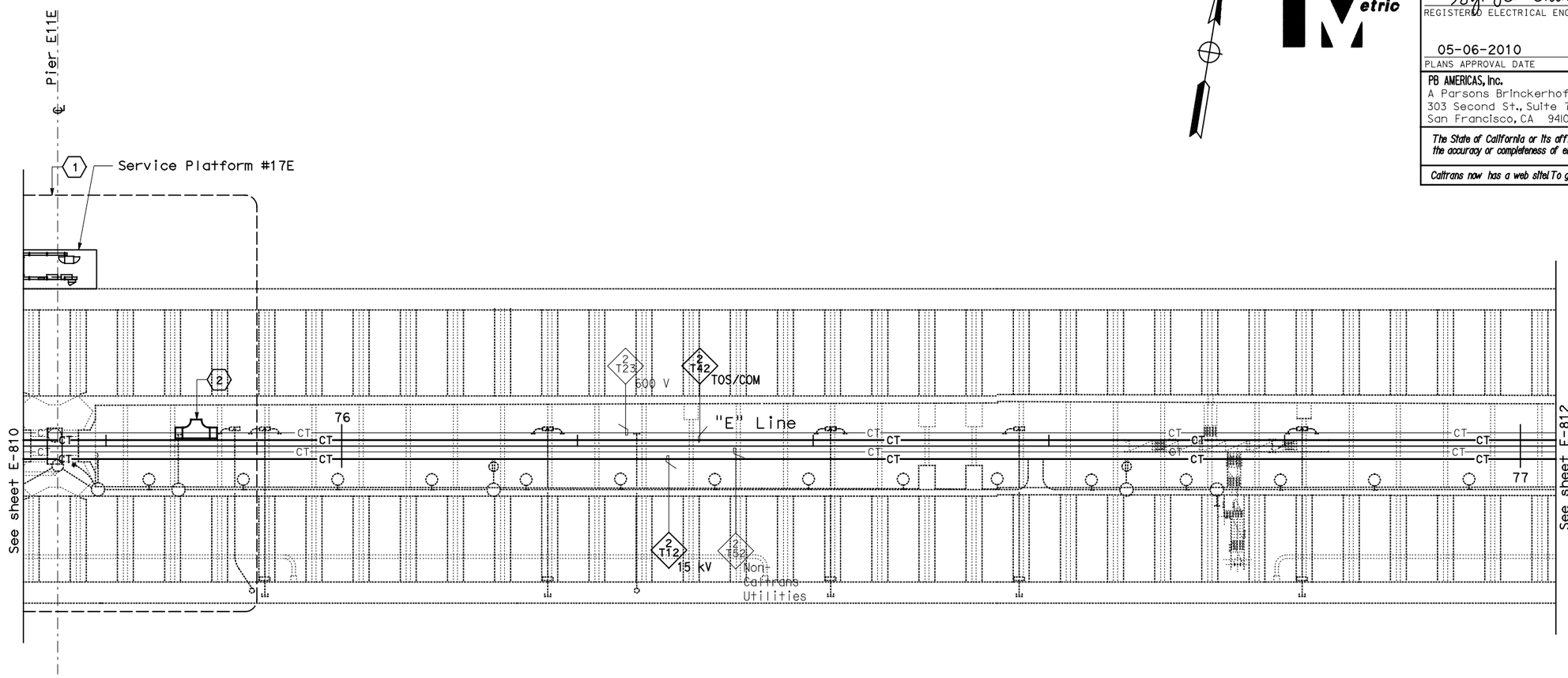

CONDUIT AND CABLE TRAY PLAN

NOTES:

1. This plan sheet is a record drawing from Skyway Structures contract. The Contractor shall verify the existing installation. See sheet EE-92 of Skyway Structures Contract No. 04-012024.
2. The installed components shall not be limited to the ones listed below, but shall be a complete installation. For details, see Bridge Structures Girder Eastbound, typical Details sheets.
   - Furnish and install 15 kV cables into existing cable tray shown on this drawing. Refer to riser diagram on E-837.
   - Furnish and install TOS fiber optic cables into existing cable tray shown on this drawing. Refer to riser diagram on E-983.
   - Inspect for system ground continuity. See sheets E-839 and E-840.
3. All cable trays shown on this drawing are existing. Bold ones are to be used for pulling cable.

SHEET NOTES:

(1) For Service Platform #17E details, see sheet E-830.

(2) Furnish and install splice cable tray as shown on sheet E-836, plan detail 2.

REQUEST FOR INFORMATION NOT ADDRESSED IN THIS CCO REMAIN IN FORCE

MARK	DATE	DESCRIPTIONS	BY	CH'D	CCO#
		REVISIONS			
0	03/08/10	MEP INTEGRATION	SYC	FW	110

CONTRACT CHANGE ORDER NO._____
SHEET _____ OF _____

BRIDGE STRUCTURES GIRDER EASTBOUND
SKYWAY STRUCTURES
SCALE: 1:200

E-811

THIS PLAN ACCURATE FOR ELECTRICAL WORK ONLY.

ALL DIMENSIONS ARE IN METERS UNLESS OTHERWISE SHOWN

FOR REDUCED PLANS ORIGINAL SCALE IS IN MILLIMETERS 0 20 40 60 80

DGN FILE =>04-0120f1_E-811.dgn
USERNAME =>llorico

CU 04251

EA 0120F1

DESIGN OVERSIGHT
BEHZAD GOLEMOHAMMADI

STATE OF CALIFORNIA - DEPARTMENT OF TRANSPORTATION
Caltrans

CALCULATED/ DESIGNED BY	SYC	DATE 01/10	REVISED BY
CHECKED BY	FW	01/10	DATE REVISED

LAST REVISION 00-00-00
DATE PLOTTED => 06-MAY-2010
TIME PLOTTED => 18:23

DIST	COUNTY	ROUTE	KILOMETER POST TOTAL PROJECT	SHEET No	TOTAL SHEETS
04	SF, Ala	80	12.2/14.3 0.0/4.0	407a 08S13	1204

Syn Yee Chin 03/08/10
REGISTERED ELECTRICAL ENGINEER DATE

05-06-2010
PLANS APPROVAL DATE

REGISTERED PROFESSIONAL ENGINEER
SYN YEE CHIN
No. 18186
Exp. 09/30/2011
ELECTRICAL
STATE OF CALIFORNIA

PB AMERICAS, Inc.
A Parsons Brinckerhoff Company
303 Second St., Suite 700N
San Francisco, CA 94107-1317

The State of California or its officers or agents shall not be responsible for the accuracy or completeness of electronic copies of this plan sheet.

Caltrans now has a web site! To get to the web site, go to http://www.dot.ca.gov

Caltrans Metric

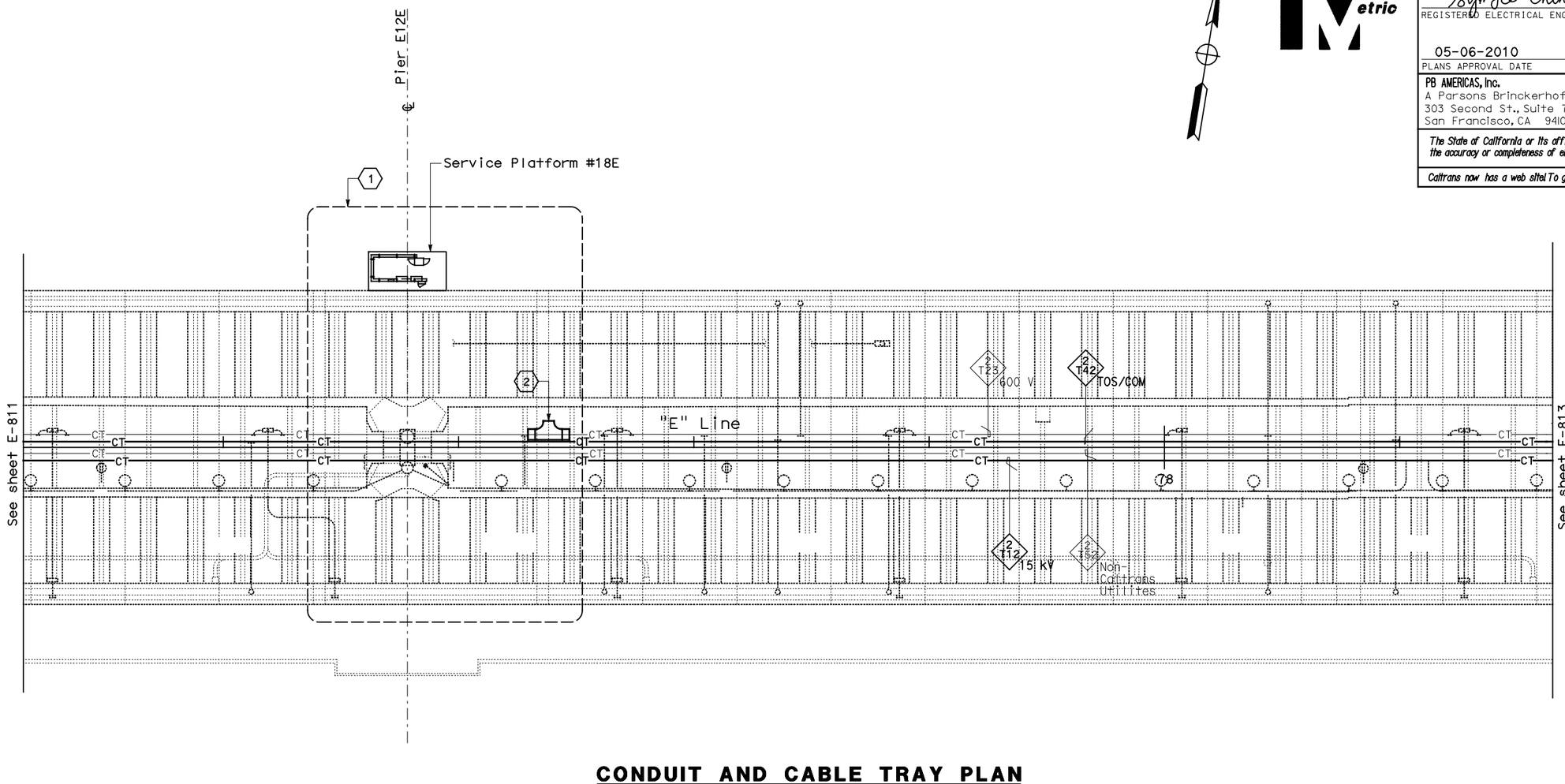

CONDUIT AND CABLE TRAY PLAN

NOTES:

1. This plan sheet is a record drawing from Skyway Structures contract. The Contractor shall verify the existing installation. See sheet EE-93 from the Skyway Structures, contract No. 04-012024.
2. The installed components shall not be limited to the ones listed below, but shall be a complete installation. For details, see Bridge Structures Girder Eastbound, typical Details sheets.
   - Furnish and install 15 kV cables into existing cable tray shown on this drawing. Refer to riser diagram on E-837.
   - Furnish and install TOS fiber optic cables into existing cable tray shown on this drawing. Refer to riser diagram on E-983.
   - Inspect for system ground continuity. See sheets E-839 and E-840.
3. All cable trays shown on this drawing are existing. Bold ones are to be used for pulling cable.

SHEET NOTES:

(1) For Service Platform #18E details, see sheet E-831.

(2) Furnish and install splice cable tray as shown on sheet E-836, plan detail 2.

REQUEST FOR INFORMATION NOT ADDRESSED IN THIS CCO REMAIN IN FORCE

MARK	DATE	DESCRIPTIONS	BY	CH'D	CCO#
		REVISIONS			
0	03/08/10	MEP INTEGRATION	SYC	FW	110

CONTRACT CHANGE ORDER NO._____
SHEET _____ OF _____

BRIDGE STRUCTURES GIRDER EASTBOUND
SKYWAY STRUCTURES
SCALE: 1:200

E-812

CALCULATED/ DESIGNED BY	CHECKED BY
SYC	FW
DATE 01/10	01/10
REVISED BY	DATE REVISED

DESIGN OVERSIGHT
BEHZAD GOLEMOHAMMADI

STATE OF CALIFORNIA - DEPARTMENT OF TRANSPORTATION
Caltrans

LAST REVISION 00-00-00
DATE PLOTTED => 06-MAY-2010
TIME PLOTTED => 18:23

THIS PLAN ACCURATE FOR ELECTRICAL WORK ONLY.

ALL DIMENSIONS ARE IN METERS UNLESS OTHERWISE SHOWN

FOR REDUCED PLANS ORIGINAL SCALE IS IN MILLIMETERS 0 20 40 60 80

DGN FILE =>04-0120f1_E-812.dgn
USERNAME =>llorico

CU 04251

EA 0120F1

DIST	COUNTY	ROUTE	KILOMETER POST TOTAL PROJECT	SHEET No	TOTAL SHEETS
04	SF, Ala	80	12.2/14.3 0.0/4.0	407a 08S14	1204

Syn Yee Chin 03/08/10
REGISTERED ELECTRICAL ENGINEER DATE

REGISTERED PROFESSIONAL ENGINEER
SYN YEE CHIN
No. 18186
Exp. 09/30/2011
ELECTRICAL
STATE OF CALIFORNIA

05-06-2010
PLANS APPROVAL DATE

PB AMERICAS, Inc.
A Parsons Brinckerhoff Company
303 Second St., Suite 700N
San Francisco, CA 94107-1317

The State of California or its officers or agents shall not be responsible for the accuracy or completeness of electronic copies of this plan sheet.

Caltrans now has a web site! To get to the web site, go to http://www.dot.ca.gov

Caltrans Metric

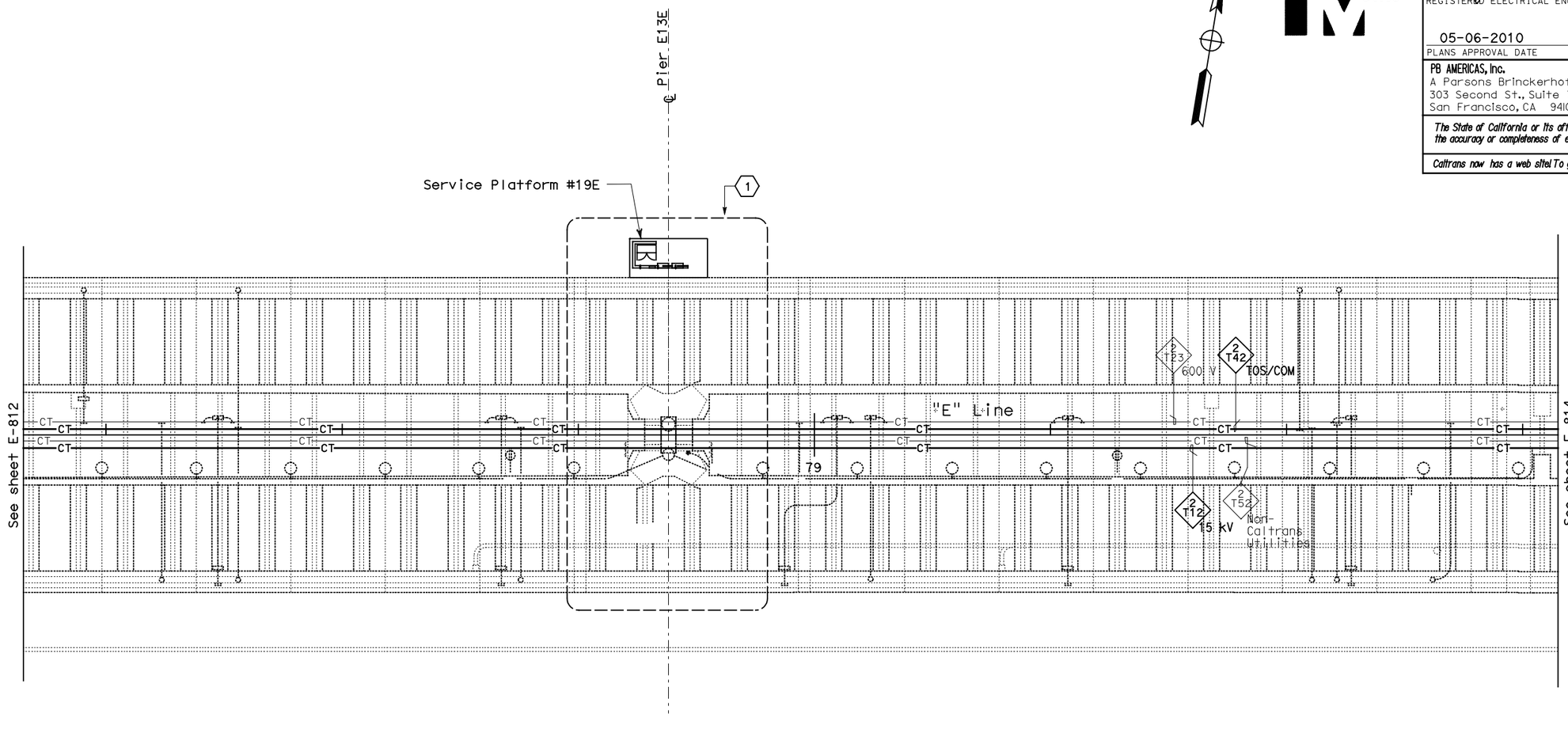

CONDUIT AND CABLE TRAY PLAN

NOTES:

1. This plan sheet is a record drawing from Skyway Structures contract. The Contractor shall verify the existing installation. See sheet EE-94 from the Skyway Structures Contract No. 04-012024.

2. The installed components shall not be limited to the ones listed below, but shall be a complete installation. For details, see Bridge Structures Girder Eastbound, typical Details sheets.
   - Furnish and install 15 kV cables into existing cable tray shown on this drawing. Refer to riser diagram on E-837.
   - Furnish and install TOS fiber optic cables into existing cable tray shown on this drawing. Refer to riser diagram on E-983.
   - Inspect for system ground continuity. See sheets E-839 and E-840.

3. All cable trays shown on this drawing are existing. Bold ones are to be used for pulling cable.

SHEET NOTES:

(1) For Service Platform #19E details, see sheet E-832.

REQUEST FOR INFORMATION NOT ADDRESSED IN THIS CCO REMAIN IN FORCE

MARK	DATE	DESCRIPTIONS (REVISIONS)	BY	CH'D	CCO#
0	03/08/10	MEP INTEGRATION	SYC	FW	110

CONTRACT CHANGE ORDER NO._____
SHEET _____ OF _____

BRIDGE STRUCTURES GIRDER EASTBOUND
SKYWAY STRUCTURES
SCALE: 1:200

E-813

THIS PLAN ACCURATE FOR ELECTRICAL WORK ONLY.

ALL DIMENSIONS ARE IN METERS UNLESS OTHERWISE SHOWN

FOR REDUCED PLANS ORIGINAL SCALE IS IN MILLIMETERS 0 20 40 60 80

DGN FILE =>04-0120f1_E-813.dgn
USERNAME =>llorico

CU 04251

EA 0120F1

DESIGN OVERSIGHT
BEHZAD GOLEMOHAMMADI

STATE OF CALIFORNIA - DEPARTMENT OF TRANSPORTATION
Caltrans

CALCULATED/ DESIGNED BY	SYC	DATE 01/10	REVISED BY
CHECKED BY	FW	01/10	DATE REVISED

LAST REVISION 00-00-00
DATE PLOTTED => 06-MAY-2010
TIME PLOTTED => 18:23

DIST	COUNTY	ROUTE	KILOMETER POST TOTAL PROJECT	SHEET No	TOTAL SHEETS
04	SF, Ala	80	12.2/14.3 0.0/4.0	407a 08S15	1204

Syn Yee Chin 03/08/10
REGISTERED ELECTRICAL ENGINEER DATE

SYN YEE CHIN No. 18186 Exp. 09/30/2011 ELECTRICAL — REGISTERED PROFESSIONAL ENGINEER — STATE OF CALIFORNIA

05-06-2010
PLANS APPROVAL DATE

PB AMERICAS, Inc.
A Parsons Brinckerhoff Company
303 Second St., Suite 700N
San Francisco, CA 94107-1317

The State of California or its officers or agents shall not be responsible for the accuracy or completeness of electronic copies of this plan sheet.

Caltrans now has a web site! To get to the web site, go to http://www.dot.ca.gov

Caltrans Metric

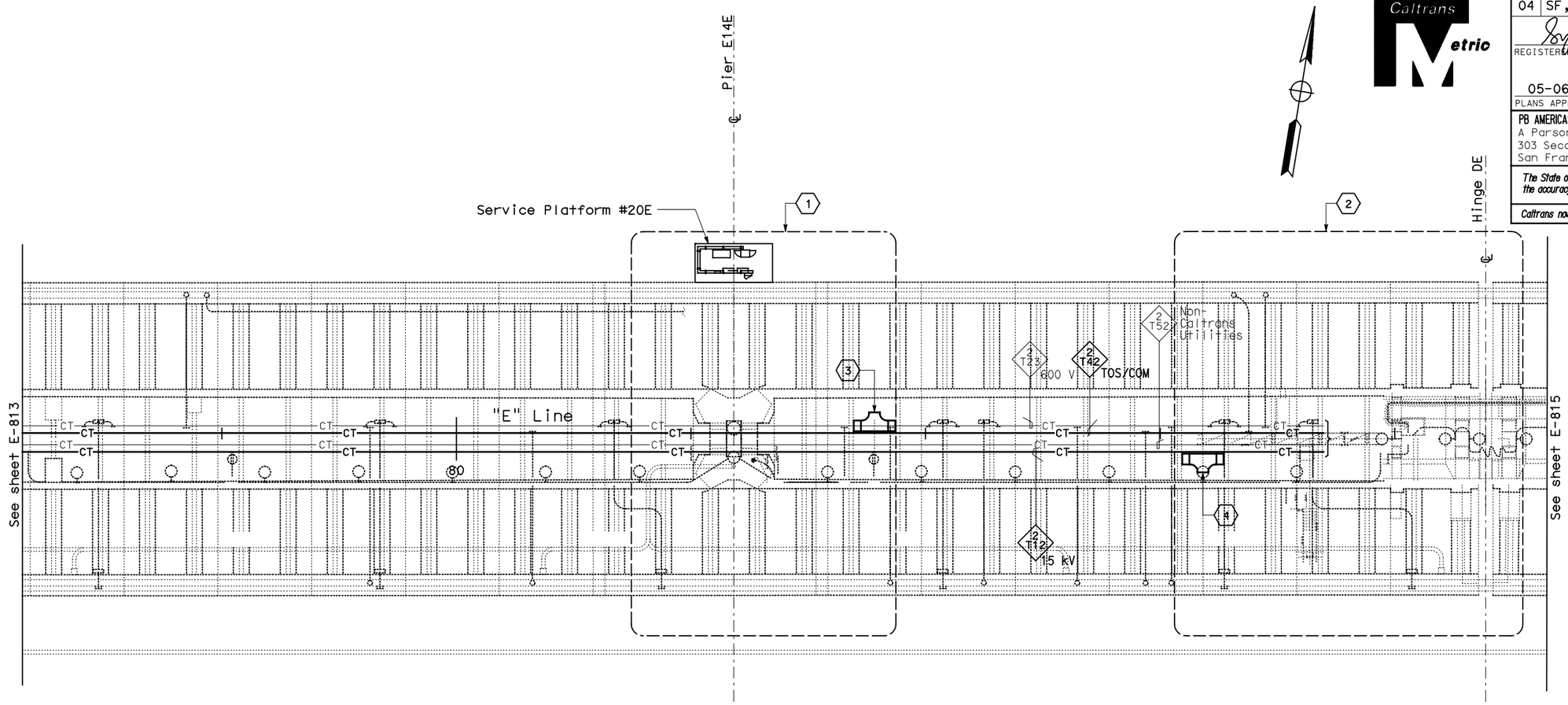

CONDUIT & CABLE TRAY PLAN

NOTES:

1. This plan sheet is a record drawing from Skyway Structures contract. The Contractor shall verify the existing installation. See sheet EE-95 from the Skyway Structures Contract No. 04-012024.

2. The installed components shall not be limited to the ones listed below, but shall be a complete installation. For details, see Bridge Structures Girder Eastbound, typical Details sheets.
   - Furnish and install 15 kV cables into existing cable tray shown on this drawing. Refer to riser diagram on E-837.
   - Furnish and install TOS fiber optic cables into existing cable tray shown on this drawing. Refer to riser diagram on E-983.
   - Inspect for system ground continuity. See sheets E-839 and E-840.

3. All cable trays shown on this drawing are existing. Bold ones are to be used for pulling cable.

SHEET NOTES:

(1) For Service Platform #20E details, see sheet E-833.

(2) For Hinge DE area details, see sheet E-833A.

(3) Furnish and install splice cable tray as shown on sheet E-836, plan detail 2.

(4) Furnish and install splice cable tray as shown on sheet E-836, plan detail 1.

REQUEST FOR INFORMATION NOT ADDRESSED IN THIS CCO REMAIN IN FORCE

MARK	DATE	DESCRIPTIONS	BY	CH'D	CCO#
		REVISIONS			
0	03/08/10	MEP INTEGRATION	SYC	FW	110

CONTRACT CHANGE ORDER NO._____
SHEET _____ OF _____

BRIDGE STRUCTURES GIRDER EASTBOUND
SKYWAY STRUCTURES

SCALE: 1:200

E-814

THIS PLAN ACCURATE FOR ELECTRICAL WORK ONLY.

ALL DIMENSIONS ARE IN METERS UNLESS OTHERWISE SHOWN

FOR REDUCED PLANS ORIGINAL SCALE IS IN MILLIMETERS 0 20 40 60 80

DGN FILE =>04-0120f1_E-814.dgn
USERNAME =>llorico

CU 04251

EA 0120F1

DESIGN OVERSIGHT
BEHZAD GOLEMOHAMMADI

CALCULATED/DESIGNED BY
CHECKED BY

DATE	REVISED BY
01/10	DATE REVISED
SYC	
FW	

STATE OF CALIFORNIA - DEPARTMENT OF TRANSPORTATION
Caltrans

LAST REVISION 00-00-00
DATE PLOTTED => 06-MAY-2010
TIME PLOTTED => 18:23

DIST	COUNTY	ROUTE	KILOMETER POST TOTAL PROJECT	SHEET No	TOTAL SHEETS
04	SF, Ala	80	12.2/14.3 0.0/4.0	407a 08S16	1204

Syn Yee Chin 03/08/10
REGISTERED ELECTRICAL ENGINEER DATE

REGISTERED PROFESSIONAL ENGINEER
SYN YEE CHIN
No. 18186
Exp. 09/30/2011
ELECTRICAL
STATE OF CALIFORNIA

05-06-2010
PLANS APPROVAL DATE

PB AMERICAS, Inc.
A Parsons Brinckerhoff Company
303 Second St., Suite 700N
San Francisco, CA 94107-1317

The State of California or its officers or agents shall not be responsible for the accuracy or completeness of electronic copies of this plan sheet.

Caltrans now has a web site! To get to the web site, go to http://www.dot.ca.gov

Caltrans Metric

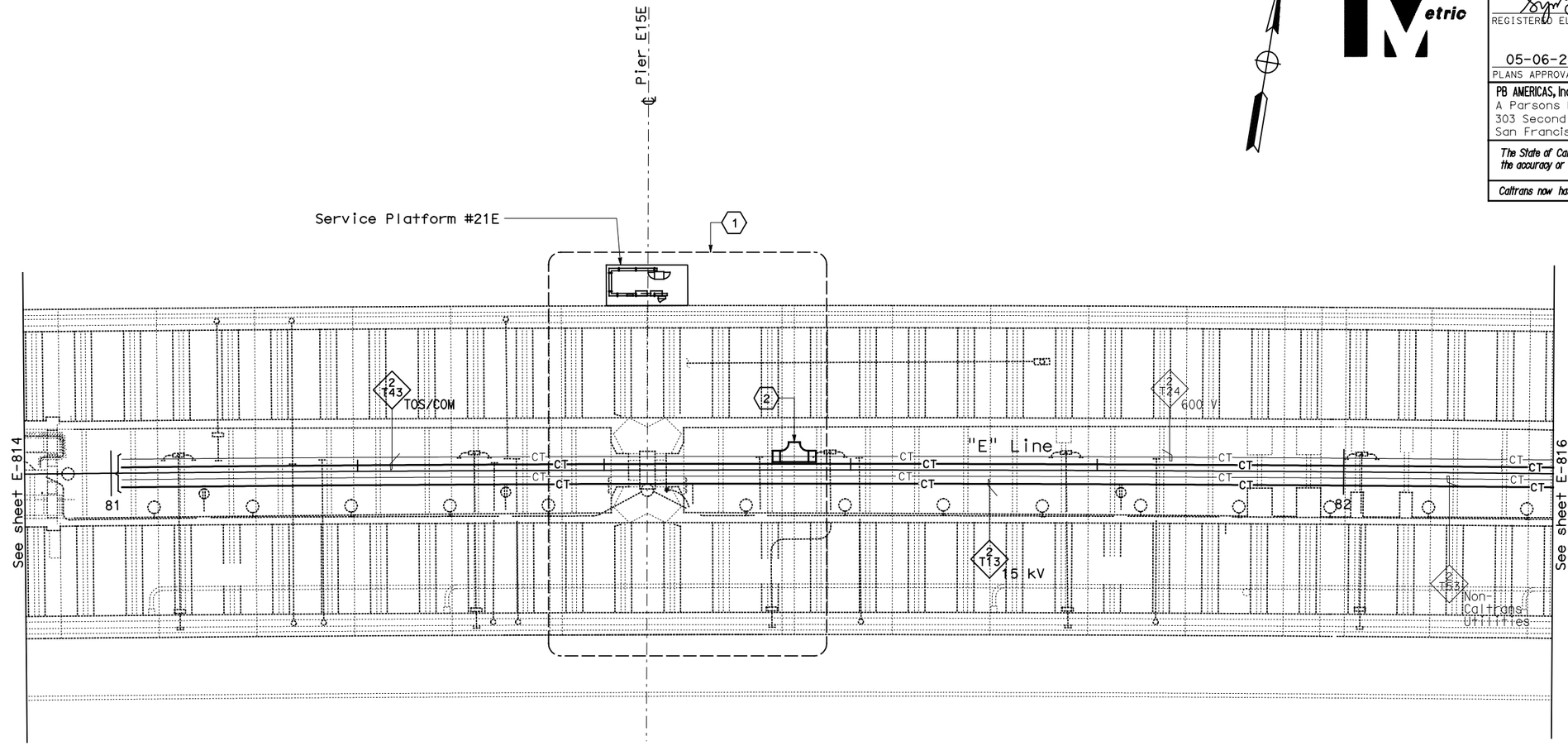

CONDUIT AND CABLE TRAY PLAN

NOTES:

1. This plan sheet is a record drawing from Skyway Structures contract. The Contractor shall verify the existing installation. See sheet EE-96 from the Skyway Structures Contract No. 04-012024.
2. The installed components shall not be limited to the ones listed below, but shall be a complete installation. For details, see Bridge Structures Girder Eastbound, typical Details sheets.
   - Furnish and install 15 kV cables into existing cable tray shown on this drawing. Refer to riser diagram on E-837.
   - Furnish and install TOS fiber optic cables into existing cable tray shown on this drawing. Refer to riser diagram on E-983.
   - Inspect for system ground continuity. See sheets E-839 and E-840.
3. All cable trays shown on this drawing are existing. Bold ones are to be used for pulling cable.

SHEET NOTES:

(1) For Service Platform #21E details, see sheet E-834.

(2) Furnish and install splice cable tray as shown on sheet E-836, plan detail 2.

REQUEST FOR INFORMATION NOT ADDRESSED IN THIS CCO REMAIN IN FORCE					
MARK	DATE	REVISIONS DESCRIPTIONS	BY	CH'D	CCO#
0	03/08/10	MEP INTEGRATION	SYC	FW	110

CONTRACT CHANGE ORDER NO._____
SHEET _____ OF _____

BRIDGE STRUCTURES GIRDER EASTBOUND
SKYWAY STRUCTURES
SCALE: 1:200

E-815

DESIGN OVERSIGHT
BEHZAD GOLEMOHAMMADI

CALCULATED/DESIGNED BY
CHECKED BY

DATE	BY	REVISED BY	DATE REVISED
01/10	SYC		
01/10	FW		

STATE OF CALIFORNIA - DEPARTMENT OF TRANSPORTATION
Caltrans

THIS PLAN ACCURATE FOR ELECTRICAL WORK ONLY.

ALL DIMENSIONS ARE IN METERS UNLESS OTHERWISE SHOWN

FOR REDUCED PLANS ORIGINAL SCALE IS IN MILLIMETERS 0 20 40 60 80

DGN FILE =>04-0120f1_E-815.dgn
USERNAME =>llorico

CU 04251

EA 0120F1

LAST REVISION 00-00-00
DATE PLOTTED => 06-MAY-2010
TIME PLOTTED => 18:24

DIST	COUNTY	ROUTE	KILOMETER POST TOTAL PROJECT	SHEET No	TOTAL SHEETS
04	SF, Ala	80	12.2/14.3 0.0/4.0	407a 08S17	1204

Syn Yee Chin 03/08/10
REGISTERED ELECTRICAL ENGINEER DATE

05-06-2010
PLANS APPROVAL DATE

REGISTERED PROFESSIONAL ENGINEER
SYN YEE CHIN
No. 18186
Exp. 09/30/2011
ELECTRICAL
STATE OF CALIFORNIA

PB AMERICAS, Inc.
A Parsons Brinckerhoff Company
303 Second St., Suite 700N
San Francisco, CA 94107-1317

The State of California or its officers or agents shall not be responsible for the accuracy or completeness of electronic copies of this plan sheet.

Caltrans now has a web site! To get to the web site, go to http://www.dot.ca.gov

Caltrans Metric

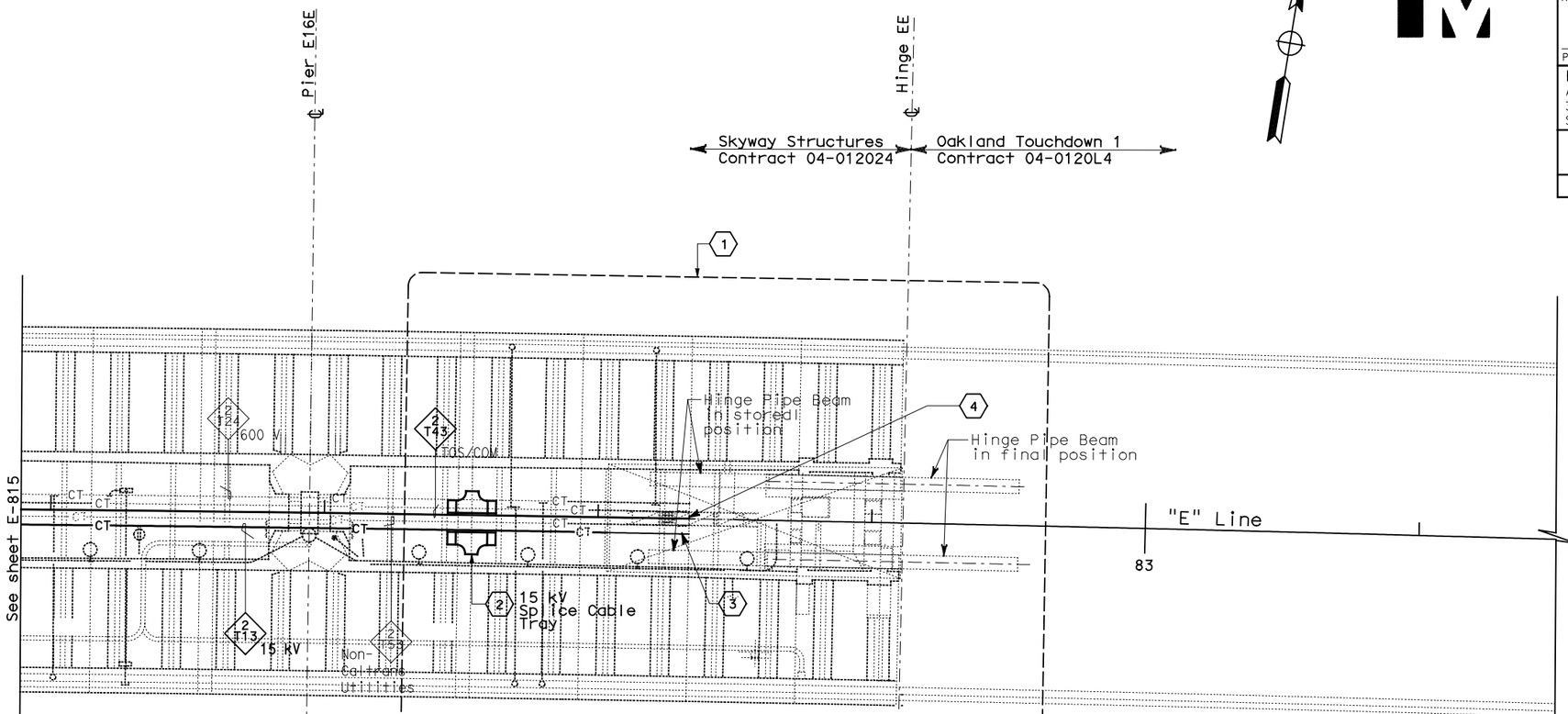

CONDUIT AND CABLE TRAY PLAN

NOTES:

1. This plan sheet is a record drawing from Skyway Structures contract. The Contractor shall verify the existing installation. See sheet EE-97 from the Skyway Structures Contract No. 04-012024.
2. The installed components shall not be limited to the ones listed below, but shall be a complete installation. For details, see Bridge Structures Girder Eastbound, typical Details sheets.
   - Furnish and install 15 kV cables into existing cable tray shown on this drawing. Refer to riser diagram on E-837.
   - Furnish and install TOS fiber optic cables into existing cable tray shown on this drawing. Refer to riser diagram on E-983.
   - Inspect for system ground continuity. See sheets E-839 and E-840.
3. All cable trays shown on this drawing are existing. Bold ones are to be used for pulling cable.

SHEET NOTES:

(1) For Hinge EE area details, see sheet E-835.

(2) Furnish and install splice cable tray as shown on sheet E-836A, plan detail 6.

(3) Furnish and install 15 kV cable with length up to this point for splicing by others.

(4) Furnish and install fiber optic cable with length up to this point for splicing by others.

REQUEST FOR INFORMATION NOT ADDRESSED IN THIS CCO REMAIN IN FORCE

MARK	DATE	DESCRIPTIONS	BY	CH'D	CCO#
		REVISIONS			
0	03/08/10	MEP INTEGRATION	SYC	FW	110

CONTRACT CHANGE ORDER NO._____
SHEET_____ OF _____

BRIDGE STRUCTURES GIRDER EASTBOUND
SKYWAY STRUCTURES
SCALE: 1:200

E-816

CALCULATED/ DESIGNED BY	CHECKED BY	DESIGN OVERSIGHT
SYC	FW	BEHZAD GOLEMOHAMMADI

MARK	DATE	REVISED BY
	01/10	DATE REVISED

STATE OF CALIFORNIA - DEPARTMENT OF TRANSPORTATION
Caltrans

LAST REVISION 00-00-00
DATE PLOTTED => 06-MAY-2010
TIME PLOTTED => 18:24

THIS PLAN ACCURATE FOR ELECTRICAL WORK ONLY.

ALL DIMENSIONS ARE IN METERS UNLESS OTHERWISE SHOWN

FOR REDUCED PLANS ORIGINAL SCALE IS IN MILLIMETERS 0 20 40 60 80

DGN FILE =>04-0120f1_E-816.dgn
USERNAME =>llorico

CU 04251

EA 0120F1

DIST	COUNTY	ROUTE	KILOMETER POST TOTAL PROJECT	SHEET No	TOTAL SHEETS
04	SF, Ala	80	12.2/14.3 0.0/4.0	407a 08S18	1204

Syn Yee Chin 03/08/10
REGISTERED ELECTRICAL ENGINEER DATE

SYN YEE CHIN
No. 18186
Exp. 09/30/2011
ELECTRICAL
REGISTERED PROFESSIONAL ENGINEER
STATE OF CALIFORNIA

05-06-2010
PLANS APPROVAL DATE

PB AMERICAS, Inc.
A Parsons Brinckerhoff Company
303 Second St., Suite 700N
San Francisco, CA 94107-1317

The State of California or its officers or agents shall not be responsible for the accuracy or completeness of electronic copies of this plan sheet.

Caltrans now has a web site! To get to the web site, go to http://www.dot.ca.gov

THIS SHEET IS INTENTIONALLY LEFT BLANK

E-817

THIS PLAN ACCURATE FOR ELECTRICAL WORK ONLY.

DESIGN OVERSIGHT	CALCULATED/ DESIGNED BY	SYC	DATE 01/10	REVISED BY
BEHZAD GOLEMOHAMMADI	CHECKED BY	FW	01/10	DATE REVISED

STATE OF CALIFORNIA - DEPARTMENT OF TRANSPORTATION
Caltrans

LAST REVISION 00-00-00
DATE PLOTTED => 06-MAY-2010
TIME PLOTTED => 18:24

FOR REDUCED PLANS ORIGINAL SCALE IS IN MILLIMETERS 0 20 40 60 80

DGN FILE =>04-0120f1_E-817.dgn
USERNAME =>llorico

CU 04251

EA 0120F1

DIST	COUNTY	ROUTE	KILOMETER POST TOTAL PROJECT	SHEET No	TOTAL SHEETS
04	SF, Ala	80	12.2/14.3 0.0/4.0	407a 08S19	1204

Syn Yee Chin 03/08/10
REGISTERED ELECTRICAL ENGINEER DATE

SYN YEE CHIN
No. 18186
Exp. 09/30/2011
ELECTRICAL
REGISTERED PROFESSIONAL ENGINEER
STATE OF CALIFORNIA

05-06-2010
PLANS APPROVAL DATE

PB AMERICAS, Inc.
A Parsons Brinckerhoff Company
303 Second St., Suite 700N
San Francisco, CA 94107-1317

The State of California or its officers or agents shall not be responsible for the accuracy or completeness of electronic copies of this plan sheet.

Caltrans now has a web site! To get to the web site, go to http://www.dot.ca.gov

THIS SHEET IS INTENTIONALLY LEFT BLANK

E-818

THIS PLAN ACCURATE FOR ELECTRICAL WORK ONLY.

REVISED BY	DATE 01/10	SYC
DATE REVISED	01/10	FW

CALCULATED/ DESIGNED BY
CHECKED BY

DESIGN OVERSIGHT
BEHZAD GOLEMOHAMMADI

STATE OF CALIFORNIA - DEPARTMENT OF TRANSPORTATION
Caltrans

LAST REVISION 00-00-00
DATE PLOTTED => 06-MAY-2010
TIME PLOTTED => 18:24

FOR REDUCED PLANS ORIGINAL SCALE IS IN MILLIMETERS 0 20 40 60 80

DGN FILE =>04-0120f1_E-818.dgn
USERNAME =>llorico

CU 04251

EA 0120F1

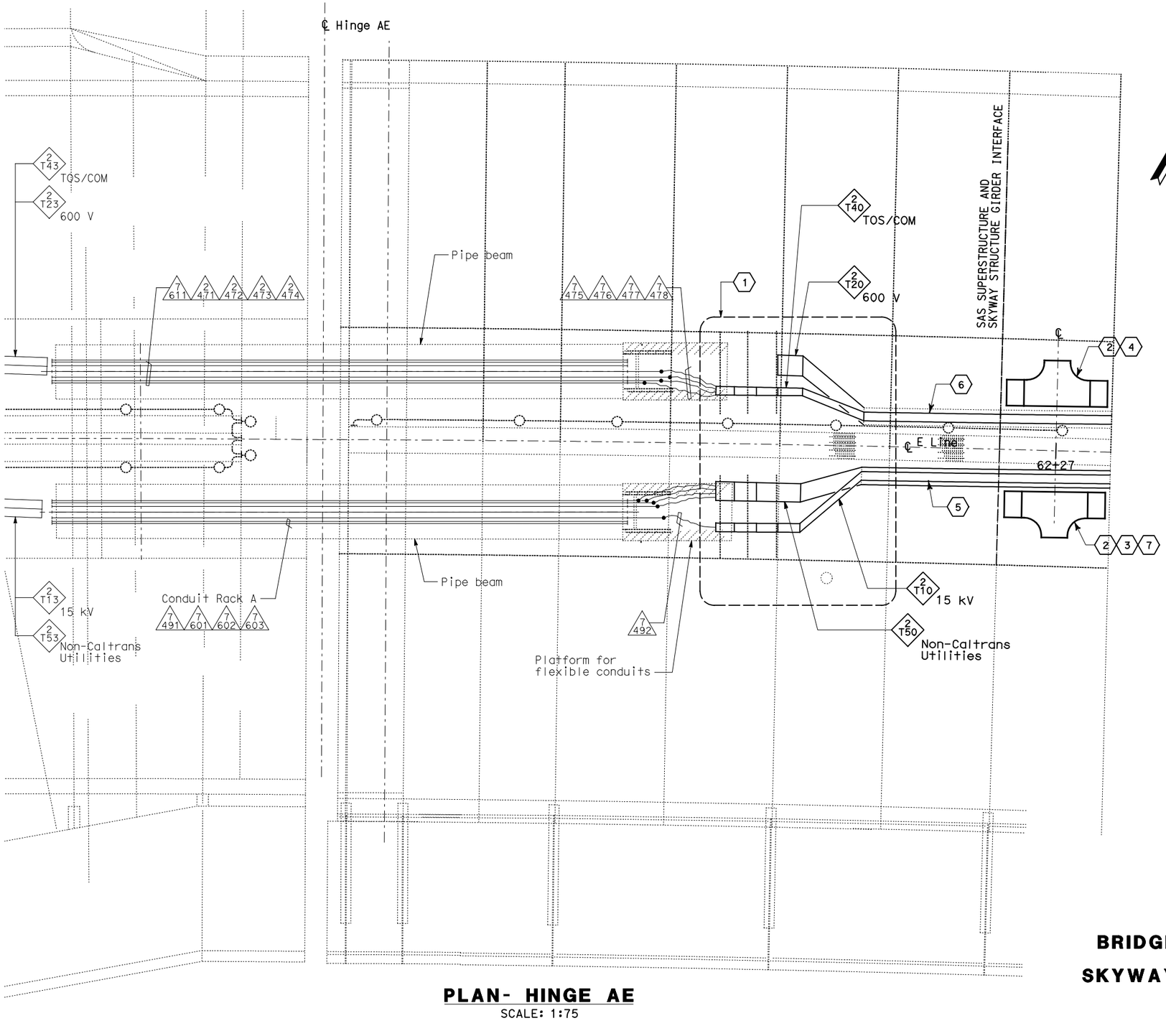

PLAN- HINGE AE

SCALE: 1:75

THIS PLAN ACCURATE FOR ELECTRICAL WORK ONLY.

ALL DIMENSIONS ARE IN METERS UNLESS OTHERWISE SHOWN

DIST	COUNTY	ROUTE	KILOMETER POST TOTAL PROJECT	SHEET No	TOTAL SHEETS
04	SF, Ala	80	12.2/14.3 0.0/4.0	407a 08S20	1204

Syn Yee Chin 03/08/10
REGISTERED ELECTRICAL ENGINEER DATE

REGISTERED PROFESSIONAL ENGINEER
SYN YEE CHIN
No. 18186
Exp. 09/30/2011
ELECTRICAL
STATE OF CALIFORNIA

05-06-2010
PLANS APPROVAL DATE

PB AMERICAS, Inc.
A Parsons Brinckerhoff Company
303 Second St., Suite 700N
San Francisco, CA 94107-1317

The State of California or its officers or agents shall not be responsible for the accuracy or completeness of electronic copies of this plan sheet.

Caltrans now has a web site! To get to the web site, go to http://www.dot.ca.gov

NOTES:

1. This plan sheet is a record drawing from the SAS Superstructure Contract. The Contractor shall verify the existing installation. See sheet E-186A from the SAS Superstructure contract No. 04-0120F4.
2. The installed components shall not be limited to the ones listed below, but shall be a complete installation. For details, see Bridge Structures Girder Eastbound, typical Details sheets.
   - Inspect for system ground continuity. See sheets E-839 and E-840.

SHEET NOTES:

(1) Contractor to complete the installation of 15 kV, Non-Caltrans Utilities,TOS and 600 V cable trays furnished by Skyway Contract, to facilitate installation of cables.

(2) Mount and secure splice cable tray between diaphragms at Station 62+27 as shown on E-800. See sheet E-836, section detail 5.

(3) Furnish and install splice cable tray as shown on sheet E-836, plan detail 1.

(4) Furnish and install splice cable tray as shown on sheet E-836, plan detail 2.

(5) Furnish and install 15 kV cables into existing cable tray shown on this drawing. See sheet E-837.

(6) Furnish and install TOS fiber optic cables into existing cable tray shown on this drawing. See sheet E-983.

(7) 15 kV splice kit furnished by others.

REQUEST FOR INFORMATION NOT ADDRESSED IN THIS CCO REMAIN IN FORCE

MARK	DATE	DESCRIPTIONS	BY	CH'D	CCO#
		REVISIONS			
0	04/19/10	MEP INTEGRATION	SYC	FW	110

CONTRACT CHANGE ORDER NO._____
SHEET _____ OF _____

DETAILS
BRIDGE STRUCTURES GIRDER EASTBOUND SAS SUPERSTRUCTURE AND SKYWAY STRUCTURES INTERFACE-HINGE AE

SCALE: AS NOTED

E-819

STATE OF CALIFORNIA - DEPARTMENT OF TRANSPORTATION
Caltrans
DESIGN OVERSIGHT
BEHZAD GOLEMOHAMMADI
CALCULATED/ DESIGNED BY
CHECKED BY
SYC FW
DATE 01/10 01/10
REVISED BY DATE REVISED

FOR REDUCED PLANS ORIGINAL SCALE IS IN MILLIMETERS 0 20 40 60 80

DGN FILE =>04-0120f1_E-819.dgn
USERNAME =>llorico

CU 04251 EA 0120F1

LAST REVISION 00-00-00
DATE PLOTTED => 06-MAY-2010
TIME PLOTTED => 18:24

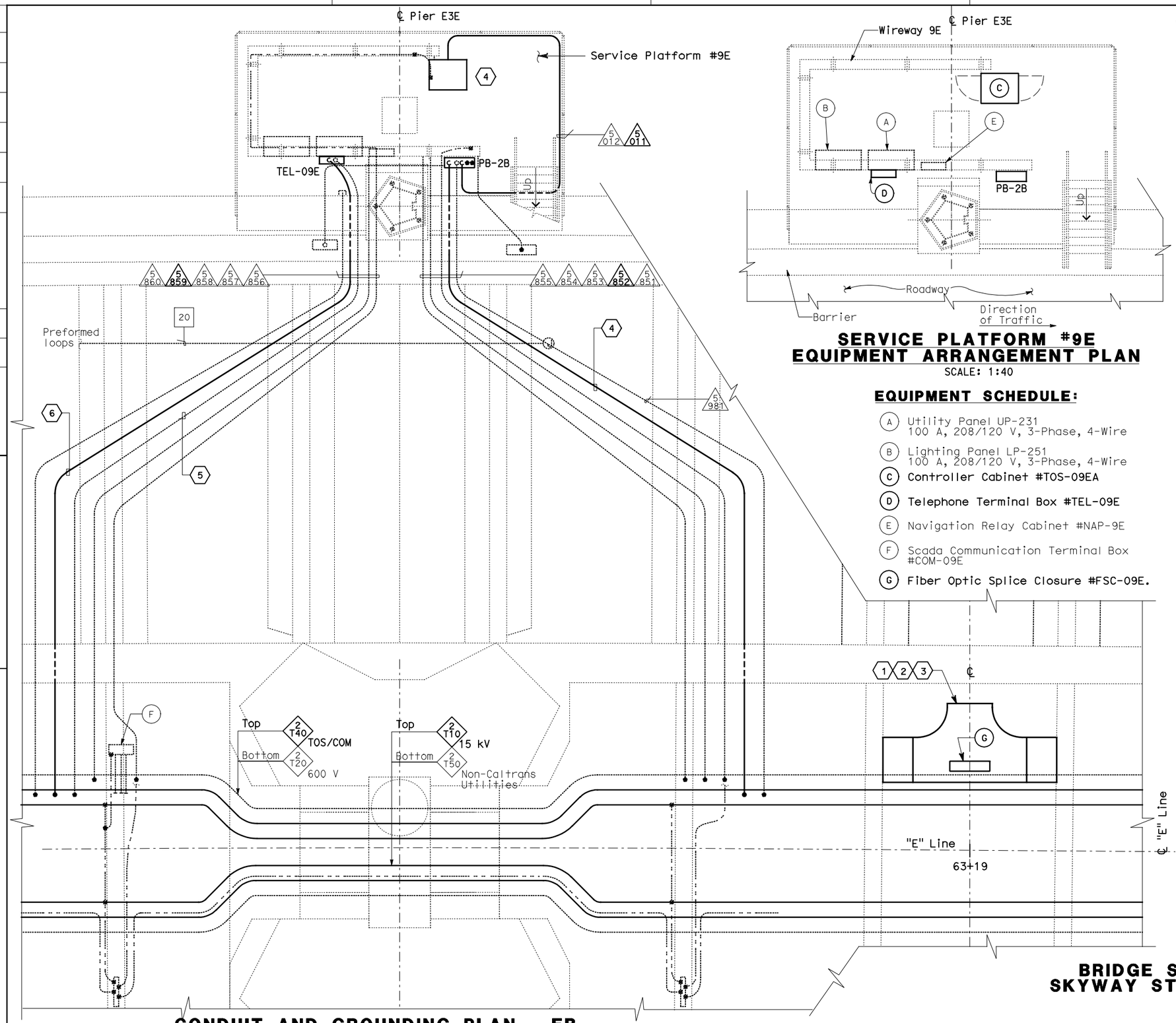

SERVICE PLATFORM #9E EQUIPMENT ARRANGEMENT PLAN

SCALE: 1:40

EQUIPMENT SCHEDULE:

- (A) Utility Panel UP-231 100 A, 208/120 V, 3-Phase, 4-Wire
- (B) Lighting Panel LP-251 100 A, 208/120 V, 3-Phase, 4-Wire
- (C) Controller Cabinet #TOS-09EA
- (D) Telephone Terminal Box #TEL-09E
- (E) Navigation Relay Cabinet #NAP-9E
- (F) Scada Communication Terminal Box #COM-09E
- (G) Fiber Optic Splice Closure #FSC-09E.

CONDUIT AND GROUNDING PLAN - EB

SCALE: 1:40

THIS PLAN ACCURATE FOR ELECTRICAL WORK ONLY.

ALL DIMENSIONS ARE IN METERS UNLESS OTHERWISE SHOWN

NOTES:

1. This plan sheet is a record drawing from Skyway Structures contract. The Contractor shall verify the existing installation. See sheet EE-281 Skyway Structures, Contract No. 04-012024.
2. The installed components shall not be limited to the ones listed below, but shall be a complete installation. For details, see Bridge Structures Girder Eastbound, typical Details sheets.
   - Furnish and install the 15kV cables into existing cable tray shown on this drawing. See sheet E-837.
   - Furnish and install the TOS fiber optic cables into existing cable tray and conduits shown on this drawing. Pull a 72 fiber in the main tray and terminate in the splice closure. See sheet E-983.
   - Inspect for system ground continuity. See sheets E-839 and E-840.
3. All cable trays, conduits and equipment shown on this drawing are existing. Bold ones are to be used for pulling cable.

SHEET NOTES:

1. Furnish and install splice cable tray as shown on sheet E-836, plan detail 2.
2. Mount splice cable tray between diaphragms, and secure properly. See sheet E-836, section detail 4.
3. Contractor shall locate the splice cable tray at Station 63+19 as shown on E-801.
4. Furnish and install 12 fiber optic cables from Fiber Optic Splice Closure to Controller Cabinet. Route via pull box PB-2B. Coil 3m of cable inside Controller Cabinet for connections by others. The coiled end of the fiber optic cables shall be terminated with mated connector. See sheets E-972 and E-973.
5. Pulling and termination of cables shall be done by others.
6. Pull and terminate 50 pair telephone cable in Telephone Terminal Box. See sheets E-961, E-963 and E-965.

REQUEST FOR INFORMATION NOT ADDRESSED IN THIS CCO REMAIN IN FORCE					
MARK	DATE	REVISIONS DESCRIPTIONS	BY	CH'D	CCO#
0	03/08/10	MEP INTEGRATION	SYC	FW	110

CONTRACT CHANGE ORDER NO._____
SHEET_____ OF _____

DETAILS
BRIDGE STRUCTURES GIRDER EASTBOUND SKYWAY STRUCTURES-SERVICE PLATFORM #9E

SCALE AS NOTED

E-820

DIST	COUNTY	ROUTE	KILOMETER POST TOTAL PROJECT	SHEET No	TOTAL SHEETS
04	SF, Ala	80	12.2/14.3 0.0/4.0	407a 08S21	1204

Syn Yee Chin 03/08/10
REGISTERED ELECTRICAL ENGINEER DATE

REGISTERED PROFESSIONAL ENGINEER — SYN YEE CHIN No. 18186 Exp. 09/30/2011 ELECTRICAL — STATE OF CALIFORNIA

05-06-2010
PLANS APPROVAL DATE

PB AMERICAS, Inc.
A Parsons Brinckerhoff Company
303 Second St., Suite 700N
San Francisco, CA 94107-1317

The State of California or its officers or agents shall not be responsible for the accuracy or completeness of electronic copies of this plan sheet.

Caltrans now has a web site! To get to the web site, go to http://www.dot.ca.gov

Caltrans Metric

DESIGN OVERSIGHT	CALCULATED/ DESIGNED BY	CHECKED BY	DRAWN BY	DATE	REVISED BY	DATE REVISED
BEHZAD GOLEMOHAMMADI	SYC	FW	01/10	01/10		

STATE OF CALIFORNIA - DEPARTMENT OF TRANSPORTATION
Caltrans

LAST REVISION 00-00-00 | DATE PLOTTED => 06-MAY-2010 | TIME PLOTTED => 18:24

FOR REDUCED PLANS ORIGINAL SCALE IS IN MILLIMETERS 0 20 40 60 80

DGN FILE =>04-0120f1_E-820.dgn
USERNAME =>llorico

CU 04251

EA 0120F1

DIST	COUNTY	ROUTE	KILOMETER POST TOTAL PROJECT	SHEET No	TOTAL SHEETS
04	SF,Ala	80	12.2/14.3 0.0/4.0	407a 08S22	1204

Syn Yee Chin 03/08/10
REGISTERED ELECTRICAL ENGINEER DATE

05-06-2010
PLANS APPROVAL DATE

REGISTERED PROFESSIONAL ENGINEER SYN YEE CHIN No. 18186 Exp. 09/30/2011 ELECTRICAL STATE OF CALIFORNIA

PB AMERICAS, Inc.
A Parsons Brinckerhoff Company
303 Second St., Suite 700N
San Francisco, CA 94107-1317

The State of California or its officers or agents shall not be responsible for the accuracy or completeness of electronic copies of this plan sheet.

Caltrans now has a web site! To get to the web site, go to http://www.dot.ca.gov

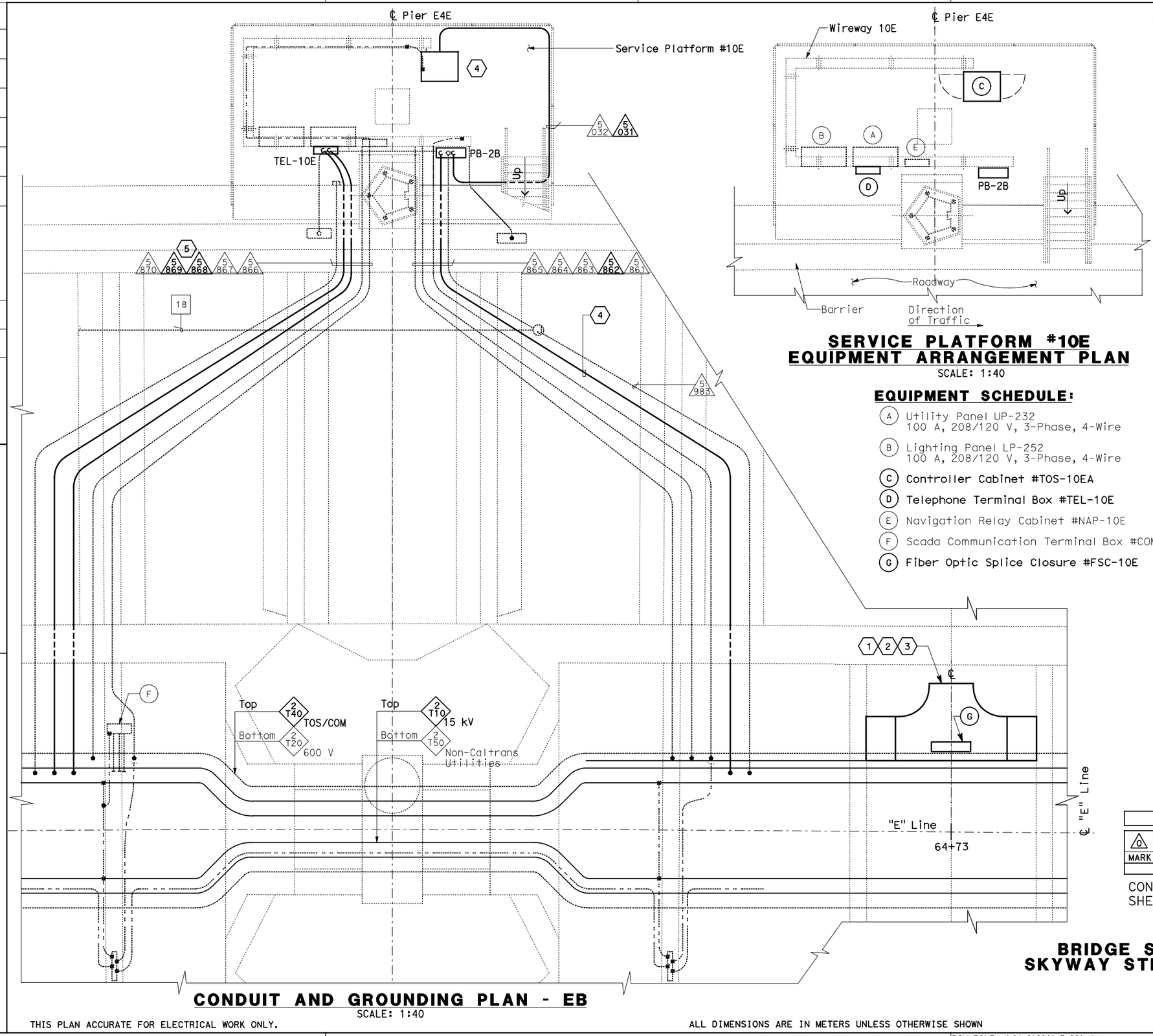

CONDUIT AND GROUNDING PLAN - EB

SCALE: 1:40

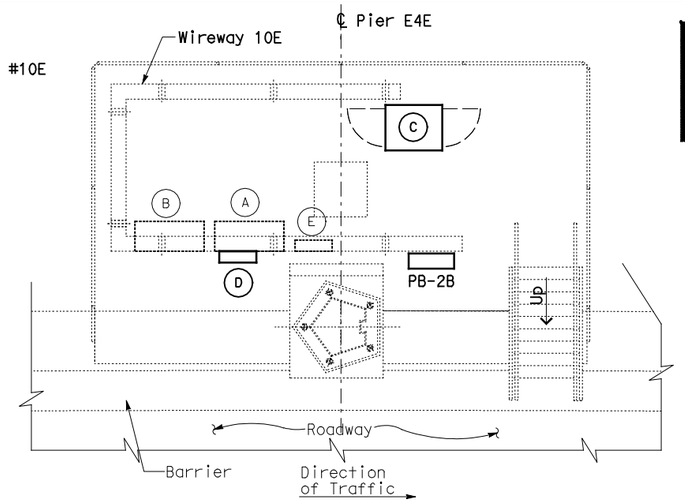

SERVICE PLATFORM #10E EQUIPMENT ARRANGEMENT PLAN

SCALE: 1:40

EQUIPMENT SCHEDULE:

- (A) Utility Panel UP-232 100 A, 208/120 V, 3-Phase, 4-Wire
- (B) Lighting Panel LP-252 100 A, 208/120 V, 3-Phase, 4-Wire
- (C) Controller Cabinet #TOS-10EA
- (D) Telephone Terminal Box #TEL-10E
- (E) Navigation Relay Cabinet #NAP-10E
- (F) Scada Communication Terminal Box #COM-10E
- (G) Fiber Optic Splice Closure #FSC-10E

NOTES:

1. This plan sheet is a record drawing from Skyway Structures contract. The Contractor shall verify the existing installation. See sheet EE-282 from Skyway Structures, contract No. 04-012024.
2. The installed components shall not be limited to the ones listed below, but shall be a complete installation, For details, see Bridge Structures Girder Eastbound, typical Details sheets.
   - Furnish and install the 15kV cables into existing cable tray shown on this drawing. See sheet E-837.
   - Furnish and install the TOS fiber optic cables into existing cable tray and conduits shown on this drawing. Pull a 72 fiber in the main tray and terminate in the splice closure. See sheet E-983.
   - Inspect for system ground continuity. See sheets E-839 and E-840.
3. All cable trays, conduits and equipment shown on this drawing are existing. Bold ones are to be used for pulling cable.

SHEET NOTES:

1. Furnish and install splice cable tray as shown on sheet E-836, plan detail 2.
2. Mount splice cable tray between diaphragms and secure properly. See sheet E-836, section detail 4.
3. Contractor shall locate the splice cable tray at Station 64+73 as shown on E-802.
4. Furnish and install 12 fiber optic cables from Fiber Optic Splice Closure to Controller Cabinet. Route via pull box PB-2B. Coil 3m of cable inside Controller Cabinet for connections by others. The coiled end of the fiber optic cables shall be terminated with mated connector. See sheets E-972 and E-973.
5. Pull and terminate 50 pair telephone cable in Telephone Terminal box. See sheets E-961, E-963 and E-965.

REQUEST FOR INFORMATION NOT ADDRESSED IN THIS CCO REMAIN IN FORCE

MARK	DATE	DESCRIPTIONS	BY	CH'D	CCO#
0	03/08/10	MEP INTEGRATION	SYC	FW	110

REVISIONS

CONTRACT CHANGE ORDER NO._____
SHEET _____ OF _____

DETAILS
BRIDGE STRUCTURES GIRDER EASTBOUND SKYWAY STRUCTURES-SERVICE PLATFORM #10E

SCALE AS NOTED

E-821

THIS PLAN ACCURATE FOR ELECTRICAL WORK ONLY.

ALL DIMENSIONS ARE IN METERS UNLESS OTHERWISE SHOWN

STATE OF CALIFORNIA - DEPARTMENT OF TRANSPORTATION
Caltrans

DESIGN OVERSIGHT: BEHZAD GOLEMOHAMMADI
CALCULATED/DESIGNED BY: SYC DATE 01/10
CHECKED BY: FW 01/10
REVISED BY
DATE REVISED

FOR REDUCED PLANS ORIGINAL SCALE IS IN MILLIMETERS 0 20 40 60 80

DGN FILE =>04-0120f1_E-821.dgn
USERNAME =>llorico

CU 04251 EA 0120F1

LAST REVISION 00-00-00
DATE PLOTTED => 06-MAY-2010
TIME PLOTTED => 18:24

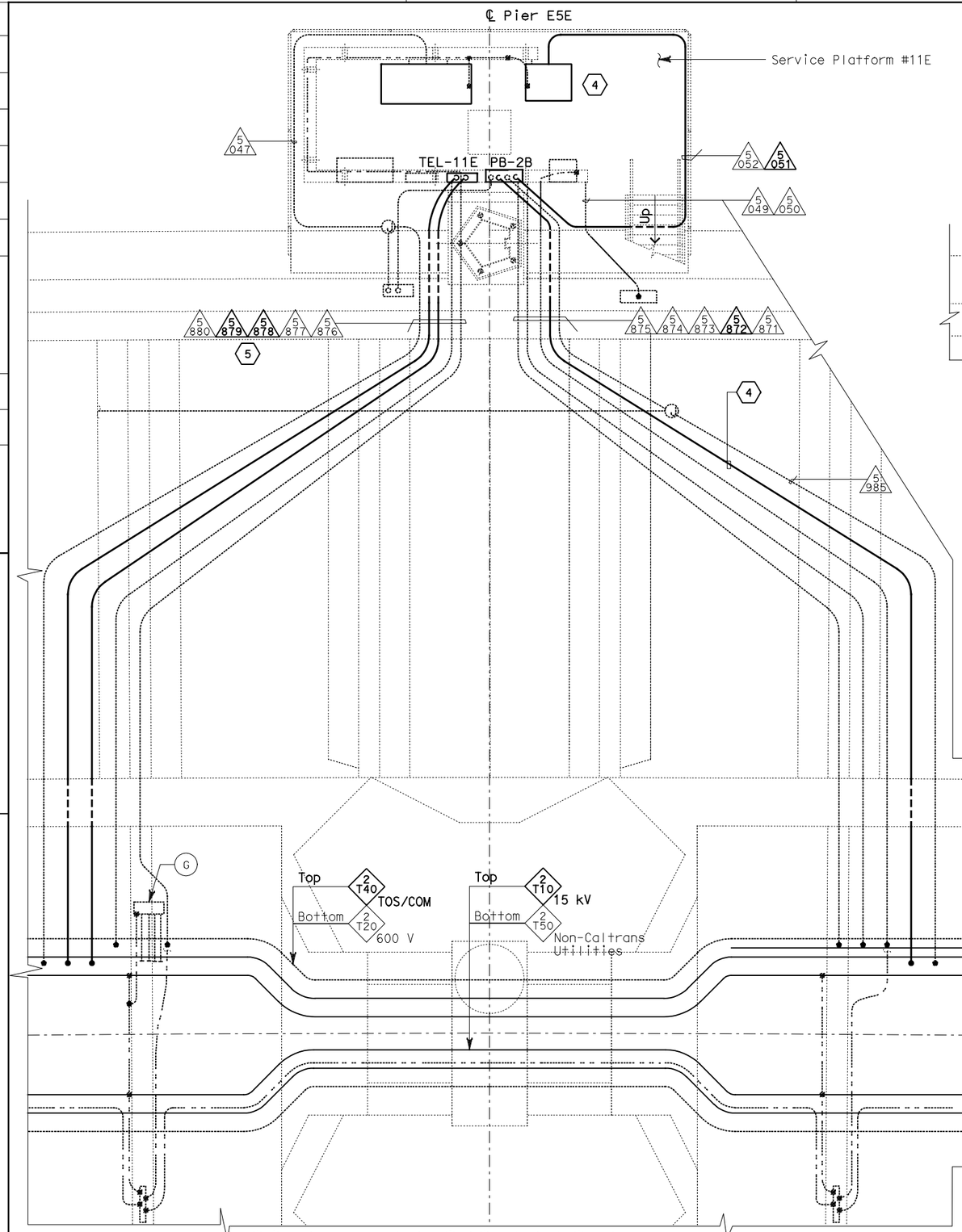

CONDUIT AND GROUNDING PLAN - EB

SCALE: 1:40

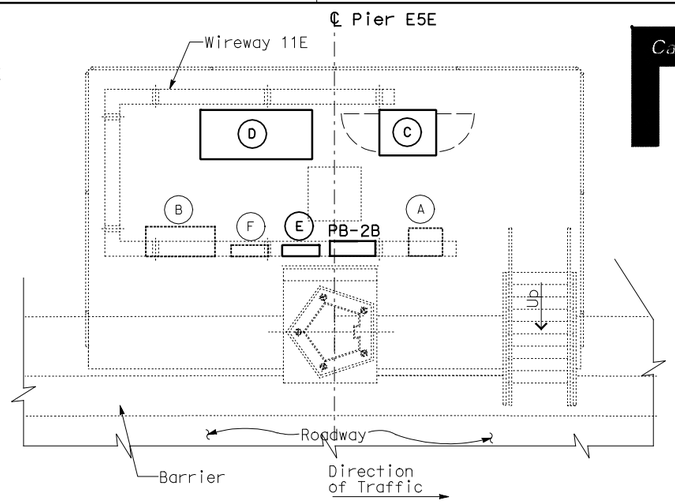

SERVICE PLATFORM #11E EQUIPMENT ARRANGEMENT PLAN

SCALE: 1:40

EQUIPMENT SCHEDULE:

- (A) Utility Panel UP-233
  100 A, 208/120 V, 3-Phase, 4-Wire
- (B) Lighting Panel LP-253
  100 A, 208/120 V, 3-Phase, 4-Wire
- (C) Controller Cabinet #TOS-11EA
- (D) Remote Terminal Unit RTU#12E
- (E) Telephone Terminal Box #TEL-11E
- (F) Navigation Relay Cabinet #NAP-11E
- (G) Scada Communication Terminal Box #COM-11E
- (H) Fiber Optic Splice Closure #FSC-11E

NOTES:

1. This plan sheet is a record drawing from Skyway Structures contract. The Contractor shall verify the existing installation. See sheet EE-283 from Skyway Structures, contract No. 04-012024.
2. The installed components shall not be limited to the ones listed below, but shall be a complete installation, For details, see Bridge Structures Girder Eastbound, typical Details sheets.
   - Furnish and install the 15kV cables into existing cable tray shown on this drawing. See sheet E-837.
   - Furnish and install the TOS fiber optic cables into existing cable tray and conduits shown on this drawing. Pull a 72 fiber in the main tray and terminate in the splice closure. See sheet E-983.
   - Inspect for system ground continuity. See sheets E-839 and E-840.
   - Remote Terminal Unit #12E. See Sheets E-902, E-903, E-907, E-908 and E-909.
3. All cable trays, conduits and equipment shown on this drawing are existing. Bold ones are to be used for pulling cable.

SHEET NOTES:

(1) Furnish and install splice cable tray as shown on sheet E-836, plan detail 2.

(2) Mount splice cable tray between diaphragms and secure properly. See sheet E-836, section detail 4.

(3) Contractor shall locate the splice cable tray at Station 66+27 as shown on E-803.

(4) Furnish and install 12 fiber optic cables from Fiber Optic Splice Closure to Controller Cabinet. Route via pull box PB-2B. Coil 3m of cable inside Controller Cabinet for connections by others. The coiled end of the fiber optic cables shall be terminated with mated connector. See sheets E-972 and E-973.

(5) Pull and terminate 50 pair telephone cable in Telephone Terminal Box. See sheets E-961, E-963 and E-965.

REQUEST FOR INFORMATION NOT ADDRESSED IN THIS CCO REMAIN IN FORCE					
0	03/08/10	MEP INTEGRATION	SYC	FW	110
MARK	DATE	DESCRIPTIONS	BY	CH'D	CCO#
REVISIONS					

CONTRACT CHANGE ORDER NO._____
SHEET _____ OF _____

DETAILS
BRIDGE STRUCTURES GIRDER EASTBOUND
SKYWAY STRUCTURES-SERVICE PLATFORM #11E

SCALE AS NOTED

E-822

DIST	COUNTY	ROUTE	KILOMETER POST TOTAL PROJECT	SHEET No	TOTAL SHEETS
04	SF, Ala	80	12.2/14.3 0.0/4.0	407a 08S23	1204

Syn Yee Chin 03/08/10
REGISTERED ELECTRICAL ENGINEER DATE

05-06-2010
PLANS APPROVAL DATE

REGISTERED PROFESSIONAL ENGINEER
SYN YEE CHIN
No. 18186
Exp. 09/30/2011
ELECTRICAL
STATE OF CALIFORNIA

PB AMERICAS, Inc.
A Parsons Brinckerhoff Company
303 Second St., Suite 700N
San Francisco, CA 94107-1317

The State of California or its officers or agents shall not be responsible for the accuracy or completeness of electronic copies of this plan sheet.

Caltrans now has a web site! To get to the web site, go to http://www.dot.ca.gov

CALCULATED/ DESIGNED BY	SYC	DATE 01/10	REVISED BY
CHECKED BY	FW	01/10	DATE REVISED

DESIGN OVERSIGHT
BEHZAD GOLEMOHAMMADI

STATE OF CALIFORNIA - DEPARTMENT OF TRANSPORTATION
Caltrans

THIS PLAN ACCURATE FOR ELECTRICAL WORK ONLY.

ALL DIMENSIONS ARE IN METERS UNLESS OTHERWISE SHOWN

FOR REDUCED PLANS ORIGINAL SCALE IS IN MILLIMETERS 0 20 40 60 80

DGN FILE =>04-0120f1_E-822.dgn
USERNAME =>llorico

CU 04251

EA 0120F1

DATE PLOTTED => 06-MAY-2010
TIME PLOTTED => 18:24

LAST REVISION 00-00-00

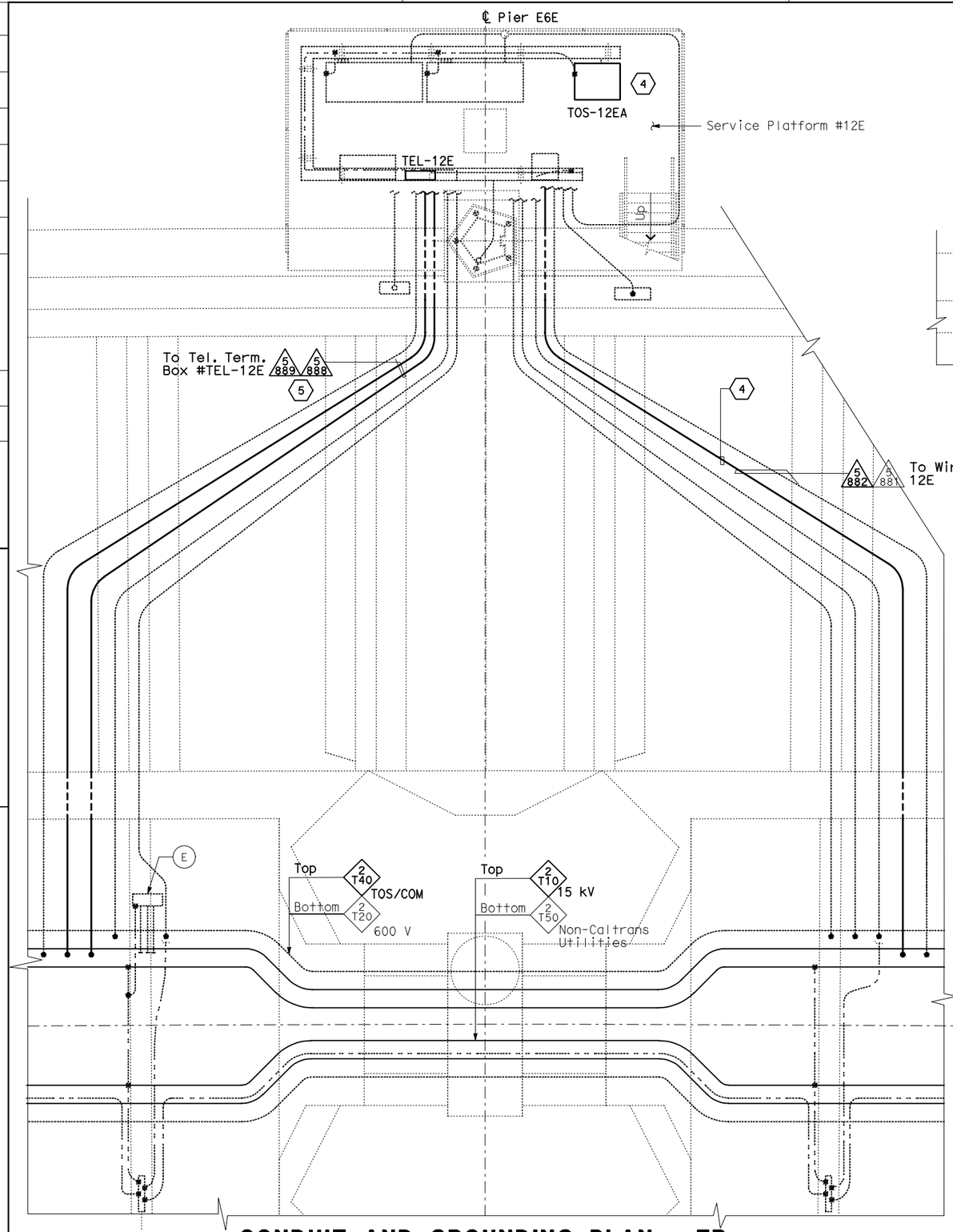

CONDUIT AND GROUNDING PLAN - EB

SCALE: 1:40

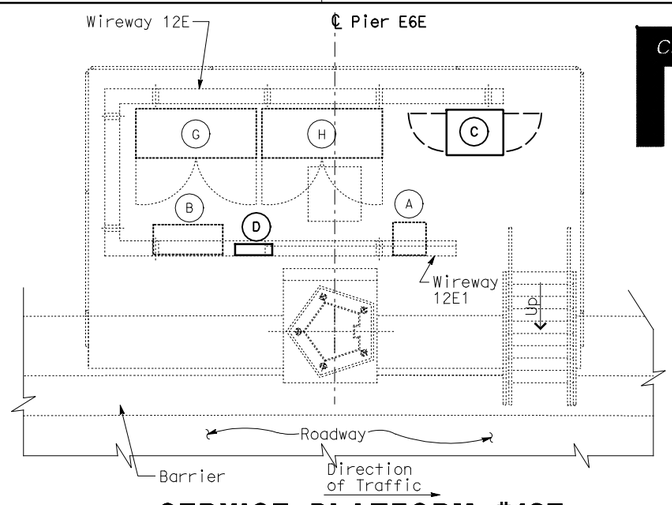

SERVICE PLATFORM #12E EQUIPMENT ARRANGEMENT PLAN

SCALE: 1:40

EQUIPMENT SCHEDULE:

- (A) Utility Panel UP-234
  100 A, 208/120 V, 3-Phase, 4-Wire
- (B) Lighting Panel LP-254
  100 A, 208/120 V, 3-Phase, 4-Wire
- (C) Controller Cabinet #TOS-12EA
- (D) Telephone Terminal Box #TEL-12E
- (E) Scada Communication Terminal Box #COM-12E
- (F) Fiber Optic Splice Closure #FSC-12E
- (G) Strong Motion Recorder #1 (Box A)
- (H) Strong Motion Recorder #1 (Box B)

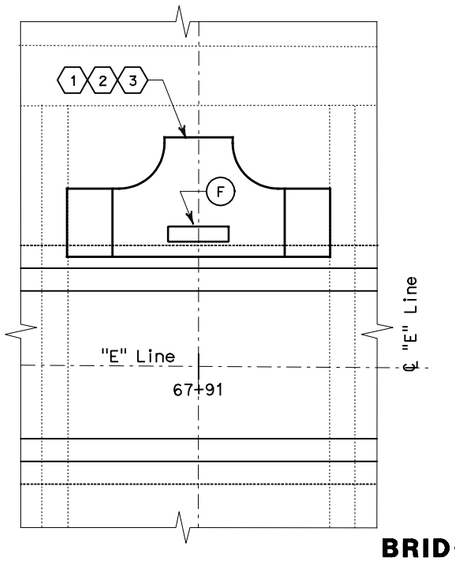

NOTES:

1. This plan sheet is a record drawing from Skyway Structures contract. The Contractor shall verify the existing installation. See sheet EE-284 from Skyway Structures, contract No. 04-012024.
2. The installed components shall not be limited to the ones listed below, but shall be a complete installation, For details, see Bridge Structures Girder Eastbound, typical Details sheets.
   - Furnish and install the 15 kV cables into existing cable tray shown on this drawing. See sheet E-837.
   - Furnish and install the TOS fiber optic cables into existing cable tray, conduit and wireway shown on this drawing. Pull a 72 fiber in the main tray and terminate in the splice closure. See sheet E-983.
   - Inspect for system ground continuity. See sheets E-839 and E-840.
3. All cable trays, conduits, wireways and equipment shown on this drawing are existing. Bold ones are to be used for pulling cable.

SHEET NOTES:

1. Furnish and install splice cable tray as shown on sheet E-836, plan detail 2.
2. Mount splice cable tray between diaphragms and secure properly. See sheet E-836, section detail 4.
3. Contractor shall locate the splice cable tray at Station 67+91 as shown on E-804.
4. Furnish and install 12 fiber optic cables from Fiber Optic Splice Closure to Controller Cabinet. Route via pull box PB-2B. Coil 3m of cable inside Controller Cabinet for connections by others. The coiled end of the fiber optic cables shall be terminated with mated connector. See sheets E-972 and E-973.
5. Pull and terminate 50 pair telephone cable in Telephone Terminal Box. See sheets E-961, E-963 and E-965.

DIST	COUNTY	ROUTE	KILOMETER POST TOTAL PROJECT	SHEET No	TOTAL SHEETS
04	SF, Ala	80	12.2/14.3 0.0/4.0	407a 08S24	1204

Syn Yee Chin 03/08/10
REGISTERED ELECTRICAL ENGINEER DATE

SYN YEE CHIN No. 18186 Exp. 09/30/2011 ELECTRICAL — REGISTERED PROFESSIONAL ENGINEER — STATE OF CALIFORNIA

05-06-2010
PLANS APPROVAL DATE

PB AMERICAS, Inc.
A Parsons Brinckerhoff Company
303 Second St., Suite 700N
San Francisco, CA 94107-1317

The State of California or its officers or agents shall not be responsible for the accuracy or completeness of electronic copies of this plan sheet.

Caltrans now has a web site! To get to the web site, go to http://www.dot.ca.gov

REQUEST FOR INFORMATION NOT ADDRESSED IN THIS CCO REMAIN IN FORCE

MARK	DATE	REVISIONS DESCRIPTIONS	BY	CH'D	CCO#
0	03/08/10	MEP INTEGRATION	SYC	FW	110

CONTRACT CHANGE ORDER NO._____
SHEET _____ OF _____

DETAILS
BRIDGE STRUCTURES GIRDER EASTBOUND SKYWAY STRUCTURES-SERVICE PLATFORM #12E

SCALE AS NOTED

E-823

DESIGN OVERSIGHT	CALCULATED/ DESIGNED BY	CHECKED BY	DRAWN BY	DATE	REVISED BY	DATE REVISED
BEHZAD GOLEMOHAMMADI	SYC	FW	OI/O	0I/I0		

STATE OF CALIFORNIA - DEPARTMENT OF TRANSPORTATION

THIS PLAN ACCURATE FOR ELECTRICAL WORK ONLY.

ALL DIMENSIONS ARE IN METERS UNLESS OTHERWISE SHOWN

FOR REDUCED PLANS ORIGINAL SCALE IS IN MILLIMETERS 0 20 40 60 80

DGN FILE =>04-0120f1_E-823.dgn
USERNAME =>llorico

CU 04251

EA 0120F1

LAST REVISION 00-00-00

DATE PLOTTED => 06-MAY-2010
TIME PLOTTED => 18:24

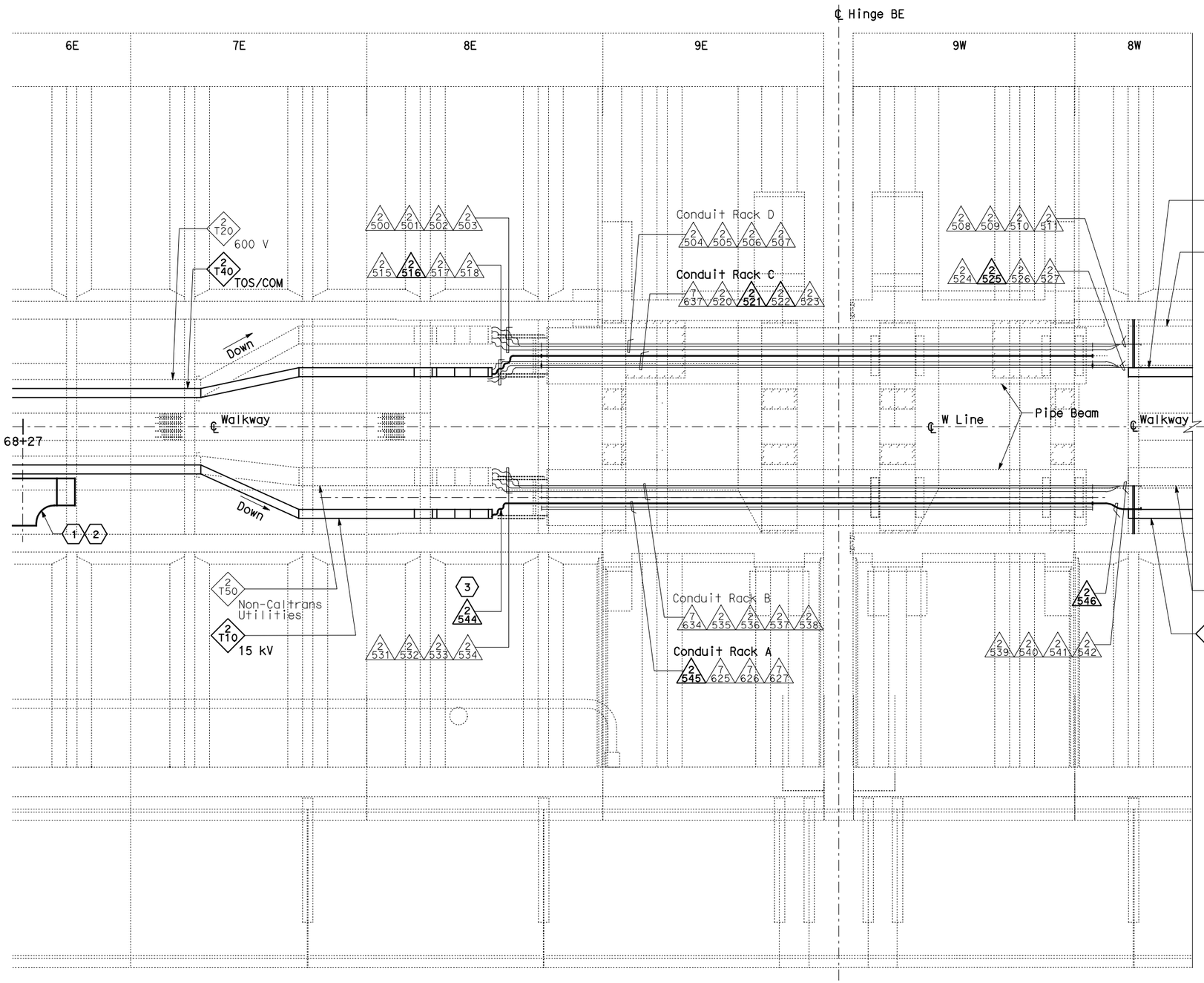

PLAN - HINGE BE
SCALE: 1:75

DIST	COUNTY	ROUTE	KILOMETER POST TOTAL PROJECT	SHEET No	TOTAL SHEETS
04	SF, Ala	80	12.2/14.3 0.0/4.0	407a 08S25	1204

Syn Yee Chin 03/08/10
REGISTERED ELECTRICAL ENGINEER DATE

REGISTERED PROFESSIONAL ENGINEER
SYN YEE CHIN
No. 18186
Exp. 09/30/2011
ELECTRICAL
STATE OF CALIFORNIA

PLANS APPROVAL DATE

PB AMERICAS, Inc.
A Parsons Brinckerhoff Company
303 Second St., Suite 700N
San Francisco, CA 94107-1317

The State of California or its officers or agents shall not be responsible for the accuracy or completeness of electronic copies of this plan sheet.

Caltrans now has a web site! To get to the web site, go to http://www.dot.ca.gov

NOTES:

1. This plan sheet is a record drawing from Skyway Structures contract. The Contractor shall verify the existing installation. See sheet EE-301A from Skyway Structures, contract No. 04-012024.
2. The installed components shall not be limited to the ones listed below, but shall be a complete installation. For details, see Bridge Structures Girder Eastbound, typical Details sheets.
   - Furnish and install the 15 kV cables into existing cable trays and conduits shown on this drawing. See sheet E-837.
   - Furnish and install fiber optic cables into existing cable trays and conduits shown on this drawing. See sheet E-983.
   - Inspect for system ground continuity. See sheets E-839 and E-840.
3. All cable trays and conduits shown on this drawing are existing. Bold ones are to be used for pulling cable.

SHEET NOTES:

(1) Furnish and install splice cable tray as shown on sheet E-836, plan detail 1.

(2) Mount splice cable tray between diaphragms at Station 68+27 as shown on E-805 and secure properly. See sheet E-836, section detail 4.

(3) In order to be able to pull the 15 kV cable, the Contractor shall disassemble the 15 kV flexible conduit installation. The 15 kV flexible conduit shall be reinstalled after the 15 kV cable has been pulled.

REQUEST FOR INFORMATION NOT ADDRESSED IN THIS CCO REMAIN IN FORCE

MARK	DATE	DESCRIPTIONS	BY	CH'D	CCO#
		REVISIONS			
0	03/08/10	MEP INTEGRATION	SYC	FW	110

CONTRACT CHANGE ORDER NO._____
SHEET _____ OF _____

DETAILS
BRIDGE STRUCTURES GIRDER EASTBOUND
SKYWAY STRUCTURES - HINGE BE
SCALE: AS NOTED

E-823A

100% SUBMITTAL (03/08/2010)
STATE OF CALIFORNIA - DEPARTMENT OF TRANSPORTATION
Caltrans
DESIGN OVERSIGHT
BEHZAD GOLEMOHAMMADI
CALCULATED/ DESIGNED BY
CHECKED BY
SYC FW
DATE 01/10 01/10
REVISED BY DATE REVISED

THIS PLAN ACCURATE FOR ELECTRICAL WORK ONLY.

ALL DIMENSIONS ARE IN METERS UNLESS OTHERWISE SHOWN

FOR REDUCED PLANS ORIGINAL SCALE IS IN MILLIMETERS 0 20 40 60 80

DGN FILE =>04-0120f1_E-823A.dgn
USERNAME =>llorico

CU 04251 EA 0120F1

LAST REVISION 00-00-00
DATE PLOTTED => 06-MAY-2010
TIME PLOTTED => 18:25

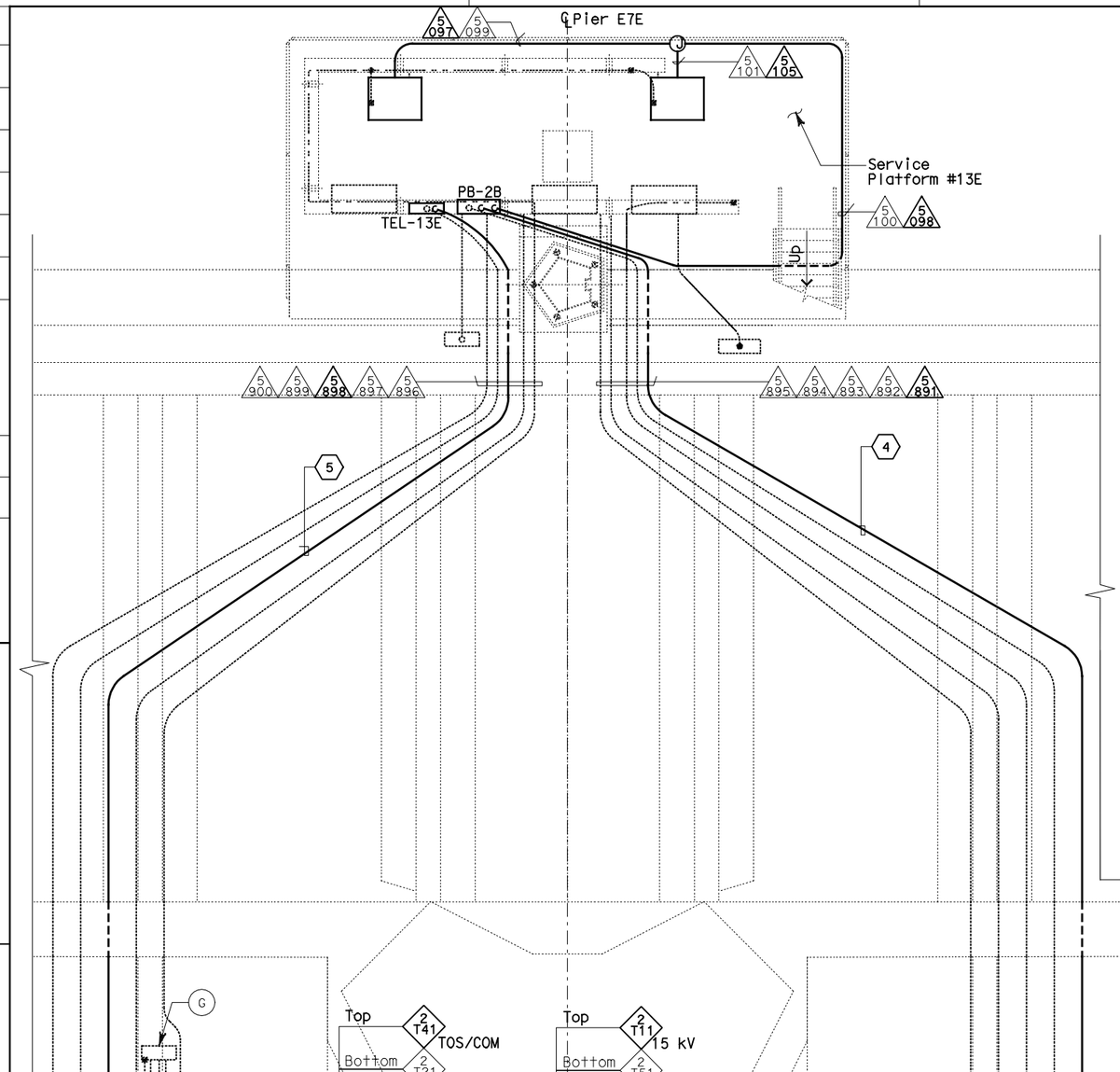

CONDUIT AND GROUNDING PLAN - EB

SCALE: 1:40

EQUIPMENT SCHEDULE:

- (A) Utility Panel UP-235
  100 A, 208/120 V, 3-Phase, 4-Wire
- (B) Lighting Panel LP-255
  100 A, 208/120 V, 3-Phase, 4-Wire
- (C) Controller Cabinet #TOS-13EA
- (D) Controller Cabinet #TOS-13EB
- (E) Utility Panel UP-244 100 A, 120/240 V,
  1-Phase 3-Wire, with 25 kVA Transformer,
  480-120/240 V
- (F) Telephone Terminal Box #TEL-13E
- (G) Scada Communication Terminal Box
  #COM-13E
- (H) Fiber Optic Splice Closure #FSC-13E

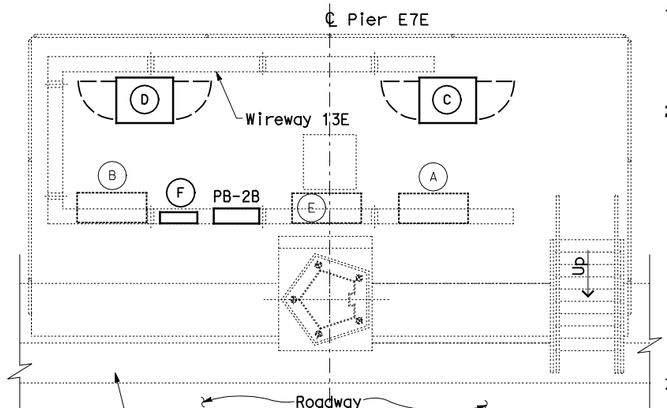

SERVICE PLATFORM #13E EQUIPMENT ARRANGEMENT PLAN

SCALE: 1:40

NOTES:

1. This plan sheet is a record drawing from Skyway Structures contract. The Contractor shall verify the existing installation. See sheet EE-285 from Skyway Structures, contract No. 04-012024.
2. The installed components shall not be limited to the ones listed below, but shall be a complete installation. For details, see Bridge Structures Girder Eastbound, typical Details sheets.
   - Furnish and install the 15 kV cables into existing cable tray shown on this drawing. See sheet E-837.
   - Furnish and install the TOS fiber optic cables into existing cable tray and conduits shown on this drawing. Pull a 72 fiber in the main tray and terminate in the splice closure. See sheet E-983.
   - Inspect for system ground continuity. See sheets E-839 and E-840.
3. All cable trays, conduits and equipment shown on this drawing are existing. Bold ones are to be used for pulling cable.

SHEET NOTES:

1. Furnish and install splice cable tray as shown on sheet E-836, section detail 2.
2. Mount splice cable tray between diaphragms and secure properly. See sheet E-836, section detail 4.
3. Contractor shall locate the splice cable tray at Station 69+47 as shown on E-806.
4. Furnish and install two 12 fiber optic cables from Fiber Optic Splice Closure to Controller Cabinet. Route via pull box PB-2B. Coil 3m of cable inside Controller Cabinet for connections by others. The coiled end of the fiber optic cables shall be terminated with mated connector. See sheets E-972 and E-973.
5. Pull and terminate 50 pair telephone cable in Telephone Terminal Box. See sheets E-961, E-963 and E-965.

REQUEST FOR INFORMATION NOT ADDRESSED IN THIS CCO REMAIN IN FORCE					
MARK	DATE	REVISIONS DESCRIPTIONS	BY	CH'D	CCO#
0	03/08/10	MEP INTEGRATION	SYC	FW	110

CONTRACT CHANGE ORDER NO. _____
SHEET _____ OF _____

DETAILS
BRIDGE STRUCTURES GIRDER EASTBOUND
SKYWAY STRUCTURES-SERVICE PLATFORM #13E

SCALE AS NOTED

E-824

DIST	COUNTY	ROUTE	KILOMETER POST TOTAL PROJECT	SHEET No	TOTAL SHEETS
04	SF, Ala	80	12.2/14.3 0.0/4.0	407a 08S26	1204

Syn Yee Chin 03/08/10
REGISTERED ELECTRICAL ENGINEER DATE

05-06-2010
PLANS APPROVAL DATE

REGISTERED PROFESSIONAL ENGINEER — SYN YEE CHIN No. 18186 Exp. 09/30/2011 ELECTRICAL — STATE OF CALIFORNIA

PB AMERICAS, Inc.
A Parsons Brinckerhoff Company
303 Second St., Suite 700N
San Francisco, CA 94107-1317

The State of California or its officers or agents shall not be responsible for the accuracy or completeness of electronic copies of this plan sheet.

Caltrans now has a web site! To get to the web site, go to http://www.dot.ca.gov

DESIGN OVERSIGHT: BEHZAD GOLEMOHAMMADI
CALCULATED/DESIGNED BY: SYC
CHECKED BY: FW
DATE: 01/10
REVISED BY: DATE REVISED

STATE OF CALIFORNIA - DEPARTMENT OF TRANSPORTATION
Caltrans

THIS PLAN ACCURATE FOR ELECTRICAL WORK ONLY.

ALL DIMENSIONS ARE IN METERS UNLESS OTHERWISE SHOWN

FOR REDUCED PLANS ORIGINAL SCALE IS IN MILLIMETERS 0 20 40 60 80

DGN FILE =>04-0120f1_E-824.dgn
USERNAME =>llorico

CU 04251

EA 0120F1

LAST REVISION 00-00-00
DATE PLOTTED => 06-MAY-2010
TIME PLOTTED => 18:25

DIST	COUNTY	ROUTE	KILOMETER POST TOTAL PROJECT	SHEET No	TOTAL SHEETS
04	SF, Ala	80	12.2/14.3 0.0/4.0	407a 08S27	1204

Syn Yee Chin 03/08/10
REGISTERED ELECTRICAL ENGINEER DATE

05-06-2010
PLANS APPROVAL DATE

REGISTERED PROFESSIONAL ENGINEER
SYN YEE CHIN
No. 18186
Exp. 09/30/2011
ELECTRICAL
STATE OF CALIFORNIA

PB AMERICAS, Inc.
A Parsons Brinckerhoff Company
303 Second St., Suite 700N
San Francisco, CA 94107-1317

The State of California or its officers or agents shall not be responsible for the accuracy or completeness of electronic copies of this plan sheet.

Caltrans now has a web site! To get to the web site, go to http://www.dot.ca.gov

THIS SHEET IS INTENTIONALLY LEFT BLANK

E-825

THIS PLAN ACCURATE FOR ELECTRICAL WORK ONLY.

REVISED BY	DATE 01/10	SYC
DATE REVISED	01/10	FW

CALCULATED/ DESIGNED BY
CHECKED BY

DESIGN OVERSIGHT
BEHZAD GOLEMOHAMMADI

STATE OF CALIFORNIA - DEPARTMENT OF TRANSPORTATION
Caltrans

LAST REVISION 00-00-00
DATE PLOTTED => 06-MAY-2010
TIME PLOTTED => 18:25

FOR REDUCED PLANS ORIGINAL SCALE IS IN MILLIMETERS 0 20 40 60 80

DGN FILE =>04-0120f1_E-825.dgn
USERNAME =>llorico

CU 04251

EA 0120F1

DIST	COUNTY	ROUTE	KILOMETER POST TOTAL PROJECT	SHEET No	TOTAL SHEETS
04	SF, Ala	80	12.2/14.3 0.0/4.0	407a 08S28	1204

Syn Yee Chin 03/08/10
REGISTERED ELECTRICAL ENGINEER DATE

REGISTERED PROFESSIONAL ENGINEER
SYN YEE CHIN
No. 18186
Exp. 09/30/2011
ELECTRICAL
STATE OF CALIFORNIA

05-06-2010
PLANS APPROVAL DATE

PB AMERICAS, Inc.
A Parsons Brinckerhoff Company
303 Second St., Suite 700N
San Francisco, CA 94107-1317

The State of California or its officers or agents shall not be responsible for the accuracy or completeness of electronic copies of this plan sheet.

Caltrans now has a web site! To get to the web site, go to http://www.dot.ca.gov

Caltrans Metric

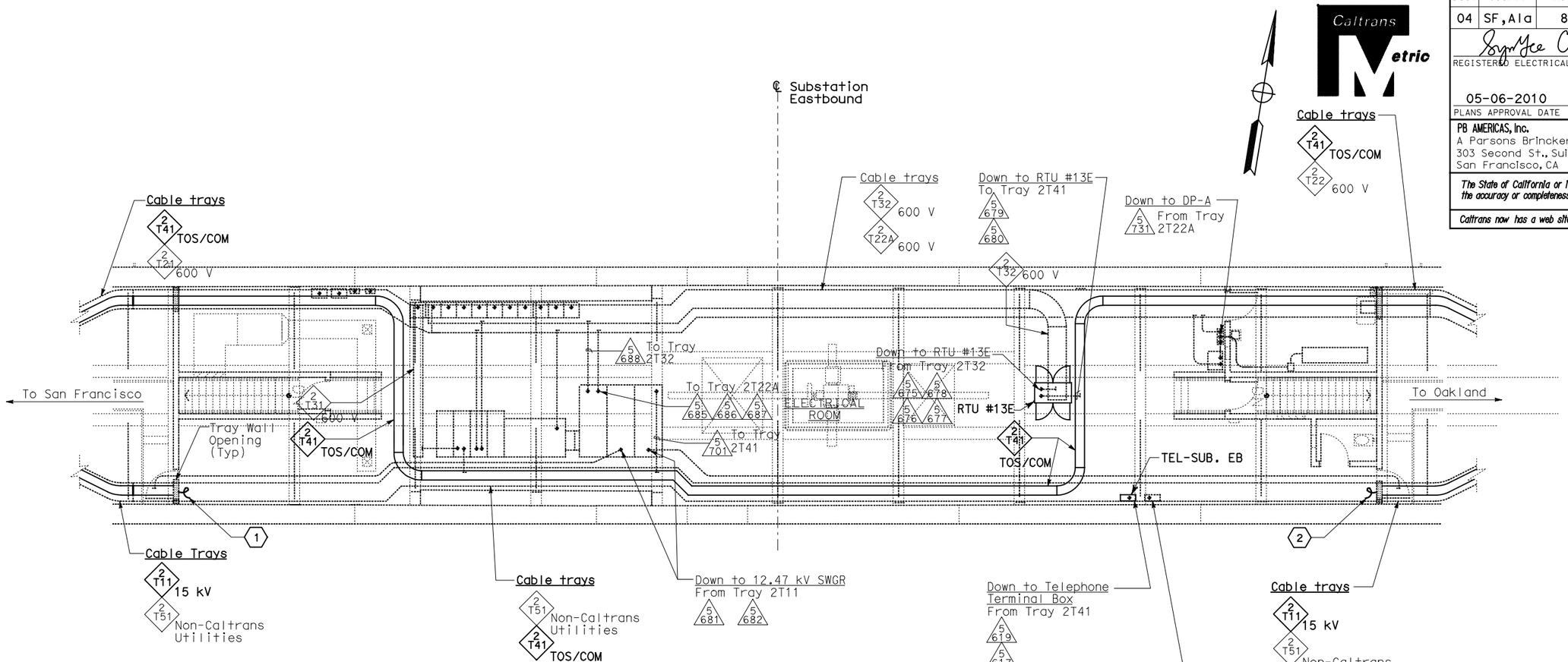

CONDUIT AND CABLE TRAY PLAN
SCALE: 1:75

NOTES:

1. This plan sheet is a record drawing from Skyway Structures contract. The Contractor shall verify the existing installation. See sheet EE-17 of Skyway Structures, contract No. 04-012024.
2. The installed components shall not be limited to the ones listed below, but shall be a complete installation. For details, see Bridge Structures Girder Eastbound, typical Details sheets.
   - Terminate already installed 50 pair telephone cable in Telephone Terminal Box. See sheets E-961, E-963 and E-965.
   - Furnish and install the 15 kV cables into existing cable trays shown on this drawing. See sheet E-837.
   - Furnish and install the TOS fiber optic cables into existing cable trays shown on this drawing. Pull a 72 fiber in the main tray. See sheet E-983.
   - Inspect for system ground continuity. See sheets E-839 and E-840.
   - Remote Terminal Unit #13E. See sheets E-902, E-910 and E-921 thru E-930.
3. All cable trays, conduits, and equipment shown on this drawing are existing. Bold ones are to be used for pulling cable. Contractor to ensure that 90° bends on trays are satisfactory to meet the minimum bending radius for cables.

THIS PLAN ACCURATE FOR ELECTRICAL WORK ONLY.

SHEET NOTES:

(1) Contractor to coil 25 m of 15 kV cable, sufficient to make future terminations to 12.47 kV switchgear.

(2) Contractor to coil 45 m of 15 kV cable, sufficient to make future terminations to 12.47 kV switchgear.

REQUEST FOR INFORMATION NOT ADDRESSED IN THIS CCO REMAIN IN FORCE

MARK	DATE	DESCRIPTIONS	BY	CH'D	CCO#
		REVISIONS			
0	03/08/10	MEP INTEGRATION	SYC	FW	110

CONTRACT CHANGE ORDER NO._____
SHEET _____ OF _____

DETAILS
BRIDGE STRUCTURES GIRDER EASTBOUND
SKYWAY STRUCTURES-SUBSTATION EASTBOUND
SCALE: AS NOTED

E-826

ALL DIMENSIONS ARE IN METERS UNLESS OTHERWISE SHOWN

CALCULATED/ DESIGNED BY	CHECKED BY	DRAWN BY	CHECKED BY	DATE REVISED
SYC	FW	01/10	01/10	00-00-00

DESIGN OVERSIGHT
BEHZAD GOLEMOHAMMADI

STATE OF CALIFORNIA - DEPARTMENT OF TRANSPORTATION
Caltrans

DATE PLOTTED => 06-MAY-2010
TIME PLOTTED => 18:25

FOR REDUCED PLANS ORIGINAL SCALE IS IN MILLIMETERS 0 20 40 60 80

DGN FILE =>04-0120f1_E-826.dgn
USERNAME =>llorico

CU 04251

EA 0120F1

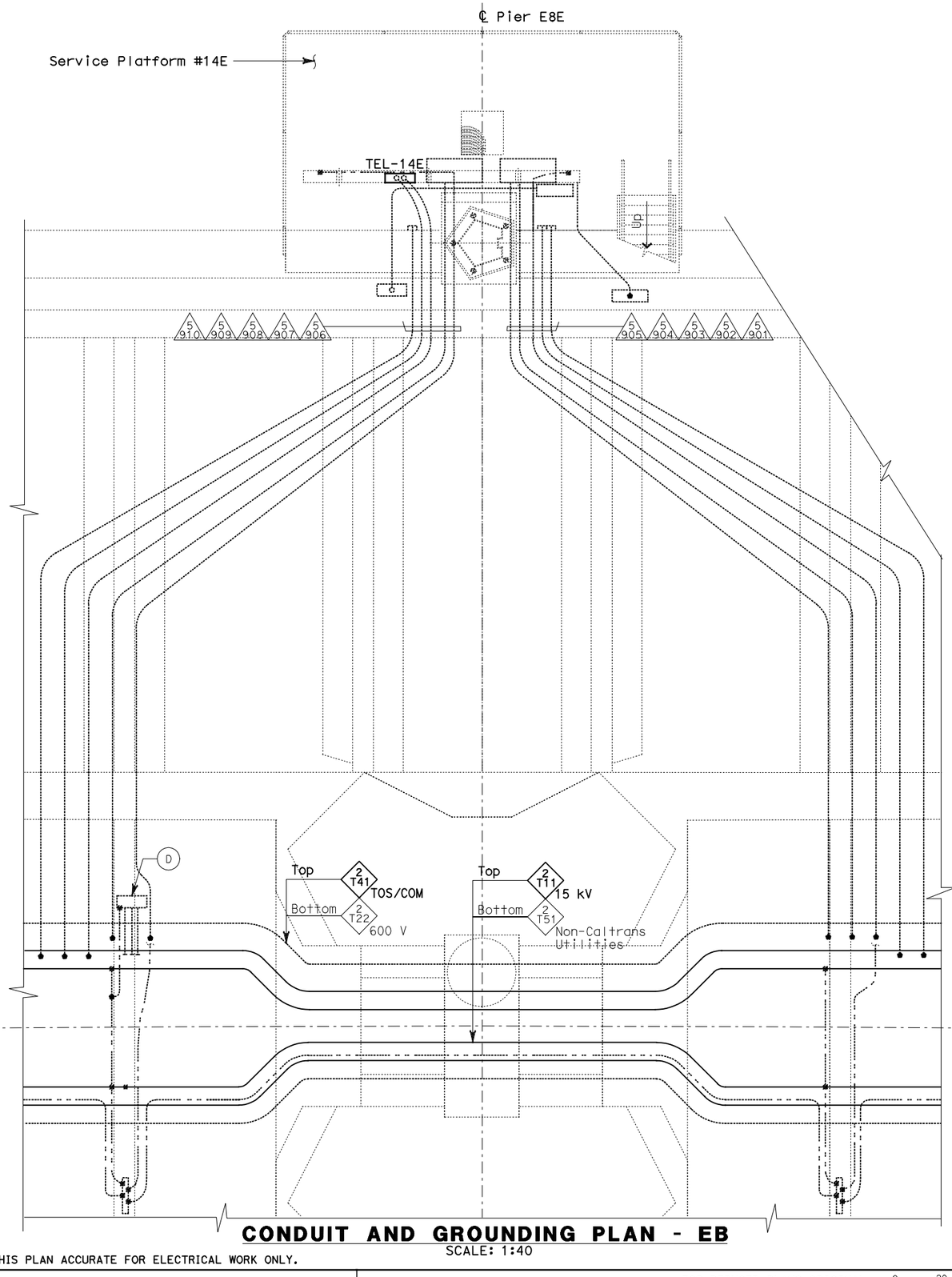

CONDUIT AND GROUNDING PLAN - EB

SCALE: 1:40

EQUIPMENT SCHEDULE:

- (A) Utility Panel UP-236
  100 A, 208/120 V, 3-Phase, 4-Wire
- (B) Lighting Panel LP-256
  100 A, 208/120 V, 3-Phase, 4-Wire
- (C) Telephone Terminal Box #TEL-14E
- (D) Scada Communication Terminal Box #COM-14E

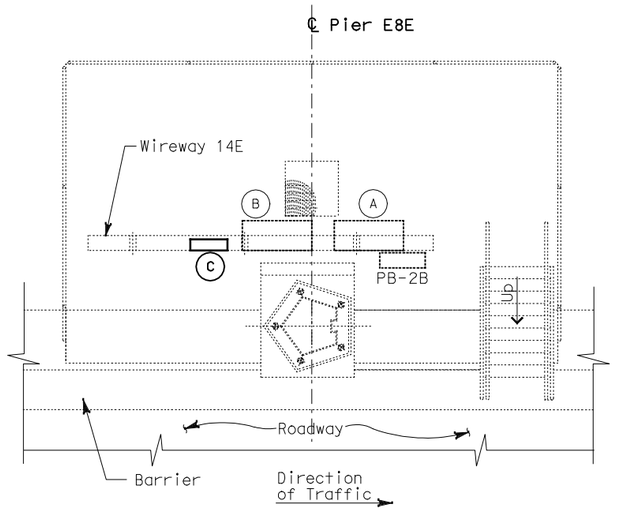

SERVICE PLATFORM #14E EQUIPMENT ARRANGEMENT PLAN

SCALE: 1:40

DIST	COUNTY	ROUTE	KILOMETER POST TOTAL PROJECT	SHEET No	TOTAL SHEETS
04	SF, Ala	80	12.2/14.3 0.0/4.0	407a 08S29	1204

Syn Yee Chin 03/08/10
REGISTERED ELECTRICAL ENGINEER DATE

REGISTERED PROFESSIONAL ENGINEER
SYN YEE CHIN
No. 18186
Exp. 09/30/2011
ELECTRICAL
STATE OF CALIFORNIA

05-06-2010
PLANS APPROVAL DATE

PB AMERICAS, Inc.
A Parsons Brinckerhoff Company
303 Second St., Suite 700N
San Francisco, CA 94107-1317

The State of California or its officers or agents shall not be responsible for the accuracy or completeness of electronic copies of this plan sheet.

Caltrans now has a web site! To get to the web site, go to http://www.dot.ca.gov

NOTES:

1. This plan sheet is a record drawing from Skyway Structures contract. The Contractor shall verify the existing installation. See sheet EE-286 from Skyway Structures, contract No. 04-012024.
2. The installed components shall not be limited to the ones listed below, but shall be a complete installation. For details, see Bridge Structures Girder Eastbound, typical Details sheets.
   - Terminate already installed 50 pair telephone cable in Telephone Terminal Box. See sheets E-961, E-963 and E-965.
   - Furnish and install the 15 kV cables into existing cable tray shown on this drawing. See sheet E-837.
   - Furnish and install the TOS fiber optic cables into existing cable tray shown on this drawing. See sheet E-983.
   - Inspect for system ground continuity. See sheets E-839 and E-840.
3. All cable trays, conduits and equipment shown on this drawing are existing. Bold ones are to be used for pulling cable.

REQUEST FOR INFORMATION NOT ADDRESSED IN THIS CCO REMAIN IN FORCE					
0	03/08/10	MEP INTEGRATION	SYC	FW	110
MARK	DATE	DESCRIPTIONS	BY	CH'D	CCO#
REVISIONS					

CONTRACT CHANGE ORDER NO._____
SHEET_____ OF _____

DETAILS
BRIDGE STRUCTURES GIRDER EASTBOUND SKYWAY STRUCTURES- SERVICE PLATFORM #14E

SCALE AS NOTED

E-827

THIS PLAN ACCURATE FOR ELECTRICAL WORK ONLY.

ALL DIMENSIONS ARE IN METERS UNLESS OTHERWISE SHOWN

FOR REDUCED PLANS ORIGINAL SCALE IS IN MILLIMETERS 0 20 40 60 80

DGN FILE =>04-0120f1_E-827.dgn
USERNAME =>llorico

CU 04251

EA 0120F1

DESIGN OVERSIGHT: BEHZAD GOLEMOHAMMADI

CALCULATED/DESIGNED BY: SYC
CHECKED BY: FW

MARK	DATE	REVISED BY	DATE REVISED
	01/10		01/10

STATE OF CALIFORNIA - DEPARTMENT OF TRANSPORTATION
Caltrans

LAST REVISION 00-00-00
DATE PLOTTED => 06-MAY-2010
TIME PLOTTED => 18:25

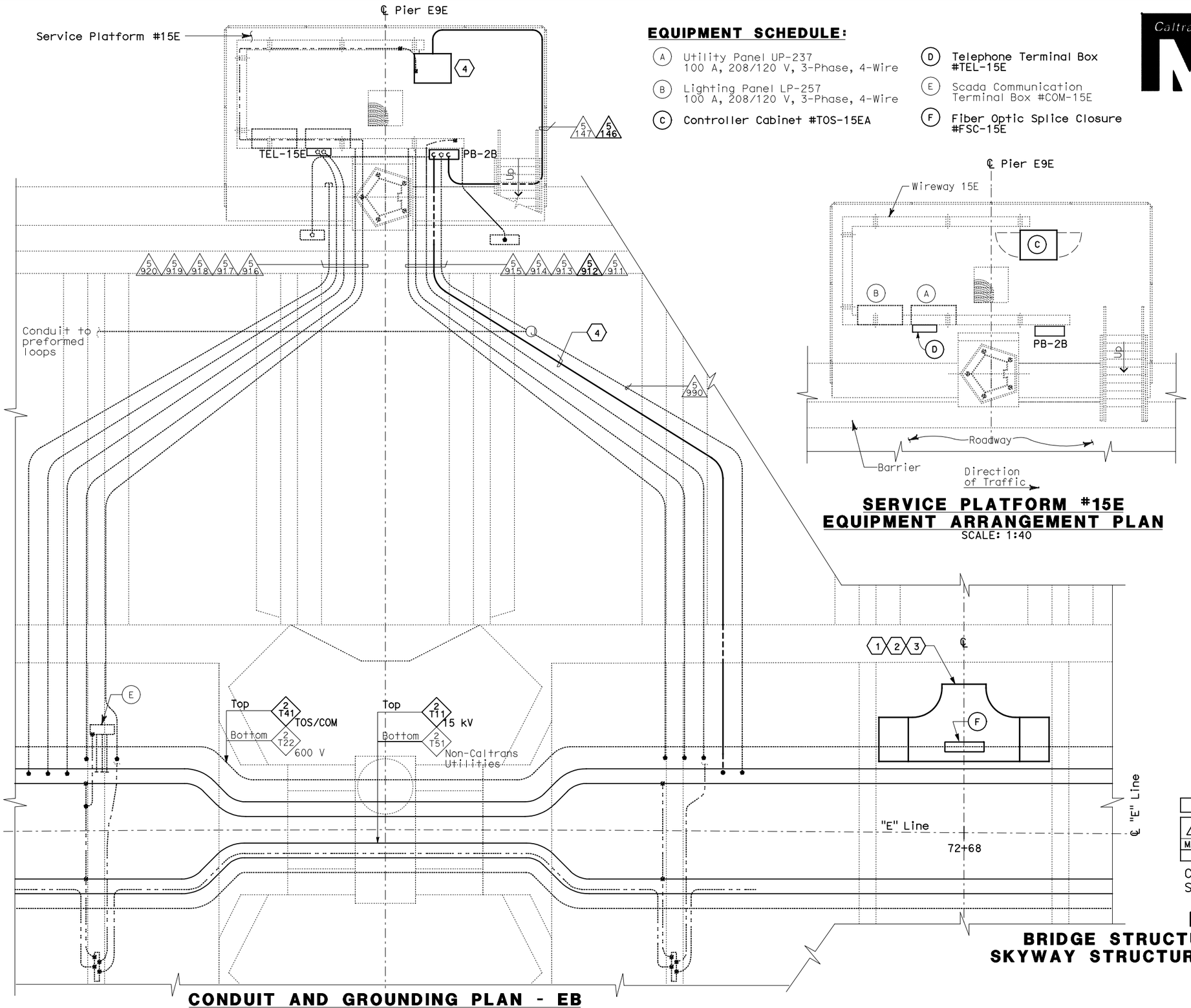

CONDUIT AND GROUNDING PLAN - EB

SCALE: 1:40

THIS PLAN ACCURATE FOR ELECTRICAL WORK ONLY.

EQUIPMENT SCHEDULE:

- (A) Utility Panel UP-237 100 A, 208/120 V, 3-Phase, 4-Wire
- (B) Lighting Panel LP-257 100 A, 208/120 V, 3-Phase, 4-Wire
- (C) Controller Cabinet #TOS-15EA
- (D) Telephone Terminal Box #TEL-15E
- (E) Scada Communication Terminal Box #COM-15E
- (F) Fiber Optic Splice Closure #FSC-15E

SERVICE PLATFORM #15E EQUIPMENT ARRANGEMENT PLAN

SCALE: 1:40

NOTES:

1. This plan sheet is a record drawing from Skyway Structures contract. The Contractor shall verify the existing installation. See sheet EE-287 from Skyway Structures, contract No. 04-012024.
2. The installed components shall not be limited to the ones listed below, but shall be a complete installation. For details, see Bridge Structures Girder Eastbound, typical Details sheets.
   - Terminate already installed 50 pair telephone cable in Telephone Terminal Box. See sheets E-961, E-963 and E-965.
   - Furnish and install the 15kV cables into existing cable tray shown on this drawing. See sheet E-837.
   - Furnish and install the TOS fiber optic cables into existing cable tray and conduits shown on this drawing. Pull a 72 fiber in the main tray and terminate in the splice closure. See sheet E-983.
   - Inspect for system ground continuity. See sheets E-839 and E-840.
3. All cable trays, conduits and equipment shown on this drawing are existing. Bold ones are to be used for pulling cable.

SHEET NOTES:

(1) Furnish and install splice cable tray as shown on sheet E-836, plan detail 2.

(2) Mount splice cable tray between diaphragms, and secure properly. See sheet E-836, section detail 4.

(3) Contractor shall locate the splice cable tray at Station 72+68 as shown on E-808.

(4) Furnish and install 12 fiber optic cables from Fiber Optic Splice Closure to Controller Cabinet. Route via pull box PB-2B. Coil 3m of cable inside Controller Cabinet for connections by others. The coiled end of the fiber optic cables shall be terminated with mated connector. See sheets E-972 and E-973.

DIST	COUNTY	ROUTE	KILOMETER POST TOTAL PROJECT	SHEET No	TOTAL SHEETS
04	SF, Ala	80	12.2/14.3 0.0/4.0	407a 08S30	1204

Syn Yee Chin 03/08/10
REGISTERED ELECTRICAL ENGINEER DATE

SYN YEE CHIN No. 18186 Exp. 09/30/2011 ELECTRICAL — REGISTERED PROFESSIONAL ENGINEER — STATE OF CALIFORNIA

05-06-2010
PLANS APPROVAL DATE

PB AMERICAS, Inc.
A Parsons Brinckerhoff Company
303 Second St., Suite 700N
San Francisco, CA 94107-1317

The State of California or its officers or agents shall not be responsible for the accuracy or completeness of electronic copies of this plan sheet.

Caltrans now has a web site! To get to the web site, go to http://www.dot.ca.gov

REQUEST FOR INFORMATION NOT ADDRESSED IN THIS CCO REMAIN IN FORCE					
MARK	DATE	REVISIONS DESCRIPTIONS	BY	CH'D	CCO#
0	03/08/10	MEP INTEGRATION	SYC	FW	110

CONTRACT CHANGE ORDER NO. _____
SHEET _____ OF _____

DETAILS
BRIDGE STRUCTURES GIRDER EASTBOUND
SKYWAY STRUCTURES-SERVICE PLATFORM #15E

SCALE AS NOTED

E-828

ALL DIMENSIONS ARE IN METERS UNLESS OTHERWISE SHOWN

FOR REDUCED PLANS ORIGINAL SCALE IS IN MILLIMETERS 0 20 40 60 80

DGN FILE =>04-0120f1_E-828.dgn
USERNAME =>llorico

CU 04251 EA 0120F1

DESIGN OVERSIGHT BEHZAD GOLEMOHAMMADI

CALCULATED/DESIGNED BY SYC | DATE 01/10 | REVISED BY
CHECKED BY FW | 01/10 | DATE REVISED

STATE OF CALIFORNIA - DEPARTMENT OF TRANSPORTATION
Caltrans

LAST REVISION 00-00-00
DATE PLOTTED => 06-MAY-2010
TIME PLOTTED => 18:25

DIST	COUNTY	ROUTE	KILOMETER POST TOTAL PROJECT	SHEET No	TOTAL SHEETS
04	SF,Ala	80	12.2/14.3 0.0/4.0	407a 08S31	1204

Syn Yee Chin 03/08/10
REGISTERED ELECTRICAL ENGINEER DATE

SYN YEE CHIN No. 18186 Exp. 09/30/2011 ELECTRICAL — REGISTERED PROFESSIONAL ENGINEER — STATE OF CALIFORNIA

05-06-2010
PLANS APPROVAL DATE

PB AMERICAS, Inc.
A Parsons Brinckerhoff Company
303 Second St., Suite 700N
San Francisco, CA 94107-1317

The State of California or its officers or agents shall not be responsible for the accuracy or completeness of electronic copies of this plan sheet.

Caltrans now has a web site! To get to the web site, go to http://www.dot.ca.gov

Caltrans Metric

EQUIPMENT SCHEDULE:

- (A) Utility Panel UP-238 100 A, 208/120 V, 3-Phase, 4-Wire
- (B) Lighting Panel LP-258 100 A, 208/120 V, 3-Phase, 4-Wire
- (C) Controller Cabinet #TOS-16EA
- (D) Remote Terminal Unit RTU#14E
- (E) Telephone Terminal Box #TEL-16E
- (F) Scada Communication Terminal Box #COM-16E
- (G) Fiber Optic Splice Closure #FSC-16E

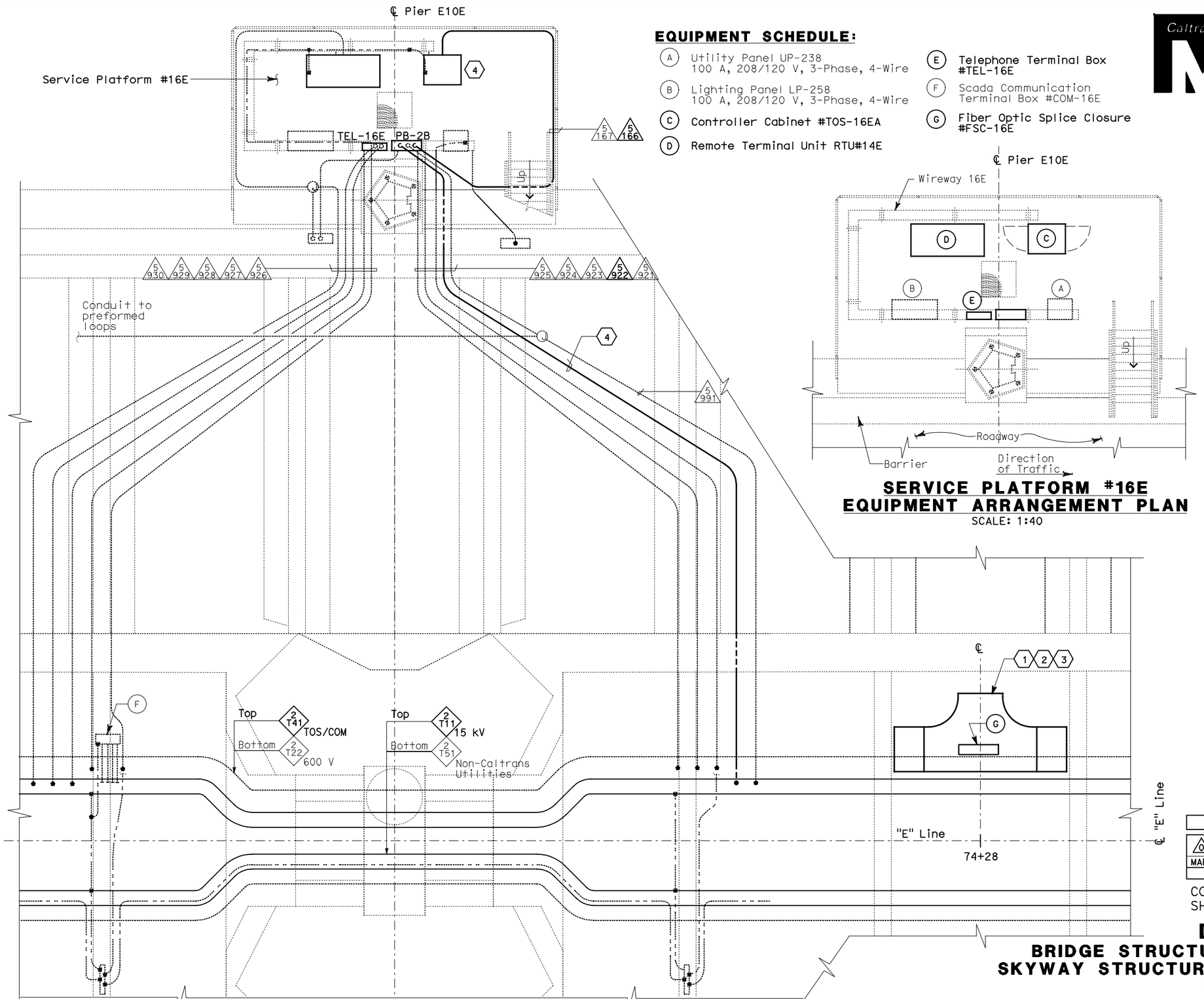

CONDUIT AND GROUNDING PLAN - EB

SCALE: 1:40

SERVICE PLATFORM #16E EQUIPMENT ARRANGEMENT PLAN

SCALE: 1:40

NOTES:

1. This plan sheet is a record drawing from Skyway Structures contract. The Contractor shall verify the existing installation. See sheet EE-288 from Skyway Structures, contract No. 04-012024.
2. The installed components shall not be limited to the ones listed below, but shall be a complete installation. For details, see Bridge Structures Girder Eastbound, typical Details sheets.
   - Terminate already installed 50 pair telephone cable in Telephone Terminal Box. See sheets E-961, E-963 and E-965.
   - Furnish and install the 15kV cables into existing cable tray shown on this drawing. See sheet E-837.
   - Furnish and install the TOS fiber optic cables into existing cable tray and conduits shown on this drawing. Pull a 72 fiber in the main tray and terminate in the splice closure. See sheet E-983.
   - Inspect for system ground continuity. See sheets E-839 and E-840.
   - Remote Terminal Unit #14E. See sheets E-902, E-931, E-934 and E-935.
3. All cable trays, conduits and equipment shown on this drawing are existing. Bold ones are to be used for pulling cable.

SHEET NOTES:

1. Furnish and install splice cable tray as shown on sheet E-836, plan detail 2.
2. Mount splice cable tray between diaphragms, and secure properly. See sheet E-836, section detail 4.
3. Contractor shall locate the splice cable tray at Station 74+28 as shown on E-809.
4. Furnish and install 12 fiber optic cables from Fiber Optic Splice Closure to Controller Cabinet. Route via pull box PB-2B. Coil 3m of cable inside Controller Cabinet for connections by others. The coiled end of the fiber optic cables shall be terminated with mated connector. See sheets E-972 and E-973.

REQUEST FOR INFORMATION NOT ADDRESSED IN THIS CCO REMAIN IN FORCE

MARK	DATE	DESCRIPTIONS / REVISIONS	BY	CH'D	CCO#
0	03/08/10	MEP INTEGRATION	SYC	FW	110

CONTRACT CHANGE ORDER NO._____
SHEET _____ OF _____

DETAILS
BRIDGE STRUCTURES GIRDER EASTBOUND SKYWAY STRUCTURES-SERVICE PLATFORM #16E

SCALE AS NOTED

E-829

THIS PLAN ACCURATE FOR ELECTRICAL WORK ONLY.

ALL DIMENSIONS ARE IN METERS UNLESS OTHERWISE SHOWN

FOR REDUCED PLANS ORIGINAL SCALE IS IN MILLIMETERS 0 20 40 60 80

DGN FILE =>04-0120f1_E-829.dgn
USERNAME =>llorico

CU 04251 EA 0120F1

DESIGN OVERSIGHT BEHZAD GOLEMOHAMMADI
CALCULATED/DESIGNED BY SYC
CHECKED BY FW
DATE 01/10
REVISED BY DATE REVISED

STATE OF CALIFORNIA - DEPARTMENT OF TRANSPORTATION
Caltrans

LAST REVISION 00-00-00
DATE PLOTTED => 06-MAY-2010
TIME PLOTTED => 18:25

DIST	COUNTY	ROUTE	KILOMETER POST TOTAL PROJECT	SHEET No	TOTAL SHEETS
04	SF,Ala	80	12.2/14.3 0.0/4.0	407a 08S32	1204

Syn Yee Chin 03/08/10
REGISTERED ELECTRICAL ENGINEER DATE

PLANS APPROVAL DATE

REGISTERED PROFESSIONAL ENGINEER SYN YEE CHIN No. 18186 Exp. 09/30/2011 ELECTRICAL STATE OF CALIFORNIA

PB AMERICAS, Inc.
A Parsons Brinckerhoff Company
303 Second St., Suite 700N
San Francisco, CA 94107-1317

The State of California or its officers or agents shall not be responsible for the accuracy or completeness of electronic copies of this plan sheet.

Caltrans now has a web site! To get to the web site, go to http://www.dot.ca.gov

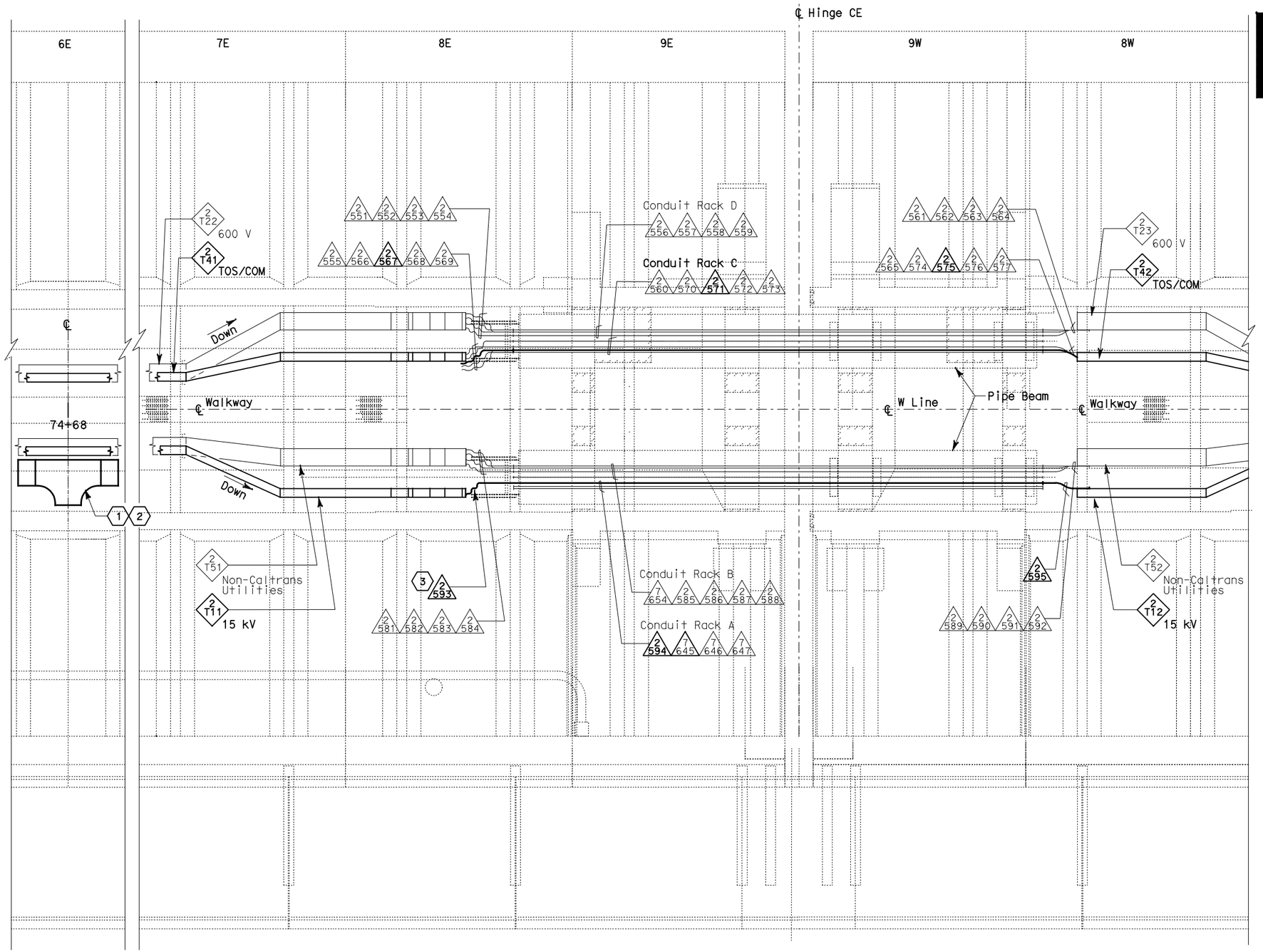

PLAN - HINGE CE

SCALE: 1:75

NOTES:

1. This plan sheet is a record drawing from Skyway Structures contract. The Contractor shall verify the existing installation. See sheet EE-302A from Skyway Structures, contract No. 04-012024.
2. The installed components shall not be limited to the ones listed below, but shall be a complete installation. For details, see Bridge Structures Girder Eastbound, typical Details sheets.
   - Furnish and install the 15kV cables into existing cable trays and conduits shown on this drawing. See sheet E-837.
   - Furnish and install fiber optic cables into existing cable trays and conduits shown on this drawing. See sheet E-983.
   - Inspect for system ground continuity. See sheets E-839 and E-840.
3. All cable trays and conduits shown on this drawing are existing. Bold ones are to be used for pulling cable.

SHEET NOTES:

1. Furnish and install splice cable tray as shown on sheet E-836, plan detail 1.
2. Mount splice cable tray between diaphragms at Station 74+68 as shown on E-810 and secure properly. See sheet E-836, section detail 4.
3. In order to be able to pull the 15 kV cable, the Contractor shall disassemble the 15 kV flexible conduit installation. The 15 kV flexible conduit shall be reinstalled after the 15 kV cable has been pulled.

REQUEST FOR INFORMATION NOT ADDRESSED IN THIS CCO REMAIN IN FORCE

MARK	DATE	DESCRIPTIONS	BY	CH'D	CCO#
0	03/08/10	MEP INTEGRATION	SYC	FW	110

REVISIONS

CONTRACT CHANGE ORDER NO._____
SHEET _____ OF _____

DETAILS
BRIDGE STRUCTURES GIRDER EASTBOUND
SKYWAY STRUCTURES - HINGE CE

SCALE AS NOTED

E-829A

100% SUBMITTAL (03/08/2010)

STATE OF CALIFORNIA - DEPARTMENT OF TRANSPORTATION

Caltrans

DESIGN OVERSIGHT: BEHZAD GOLEMOHAMMADI

CALCULATED/DESIGNED BY: SYC DATE 01/10 REVISED BY
CHECKED BY: FW 01/10 DATE REVISED

THIS PLAN ACCURATE FOR ELECTRICAL WORK ONLY.

ALL DIMENSIONS ARE IN METERS UNLESS OTHERWISE SHOWN

FOR REDUCED PLANS ORIGINAL SCALE IS IN MILLIMETERS 0 20 40 60 80

DGN FILE =>04-0120f1_E-829A.dgn
USERNAME =>llorico

CU 04251 EA 0120F1

LAST REVISION 00-00-00
DATE PLOTTED => 06-MAY-2010
TIME PLOTTED => 18:25

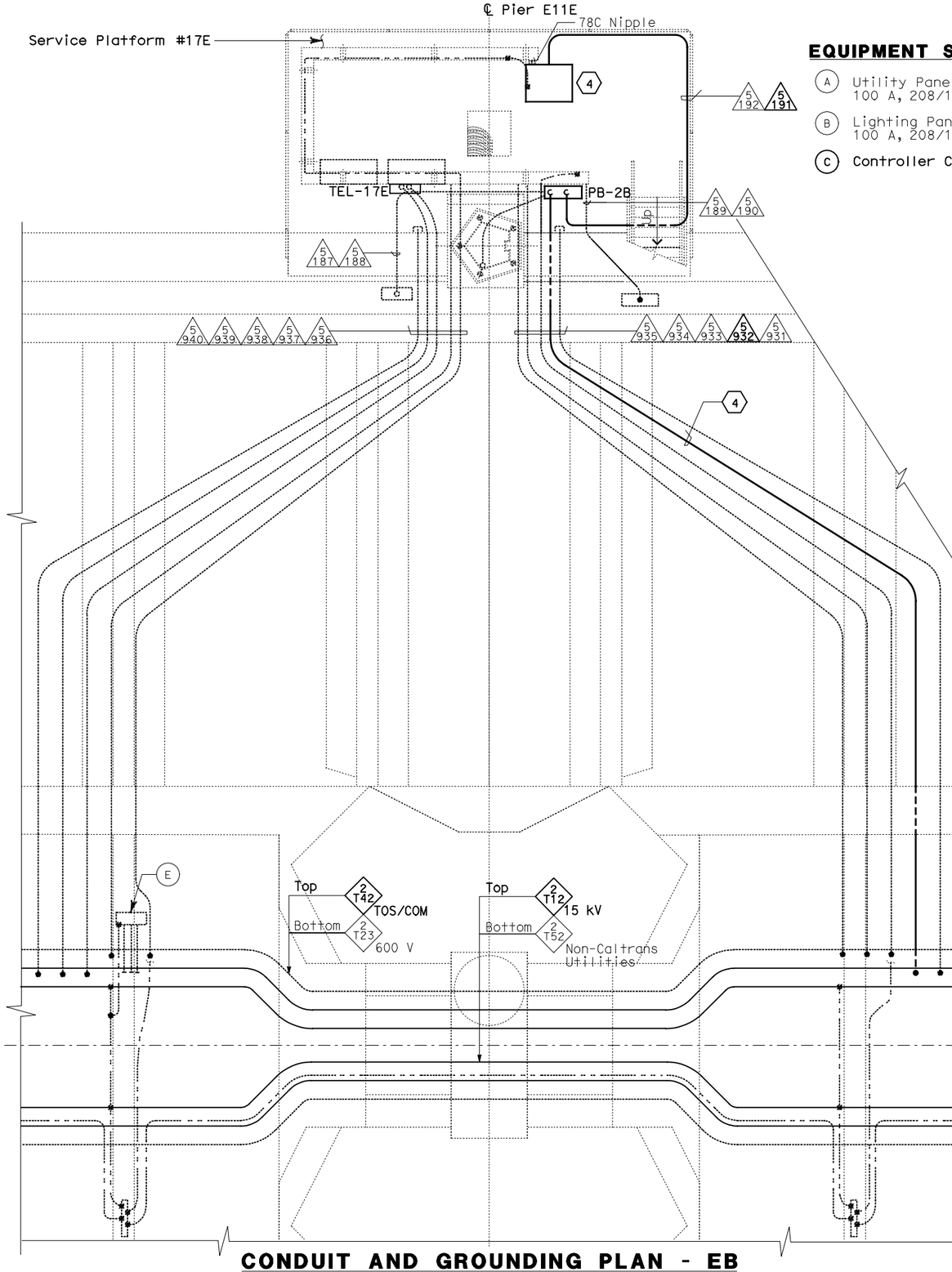

CONDUIT AND GROUNDING PLAN - EB

SCALE: 1:40

THIS PLAN ACCURATE FOR ELECTRICAL WORK ONLY.

EQUIPMENT SCHEDULE:

- (A) Utility Panel UP-239
  100 A, 208/120 V, 3-Phase, 4-Wire
- (B) Lighting Panel LP-259
  100 A, 208/120 V, 3-Phase, 4-Wire
- (C) Controller Cabinet #TOS-17EA
- (D) Telephone Terminal Box #TEL-17E
- (E) Scada Communication Terminal Box #COM-17E
- (F) Fiber Optic Splice Closure #FSC-17E

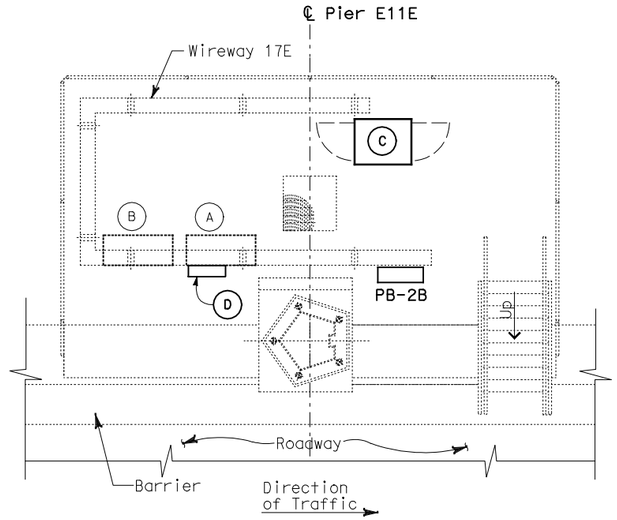

SERVICE PLATFORM #17E EQUIPMENT ARRANGEMENT PLAN

SCALE: 1:40

NOTES:

1. This plan sheet is a record drawing from Skyway Structures contract. The Contractor shall verify the existing installation. See sheet EE-289 from Skyway Structures, contract No. 04-012024.
2. The installed components shall not be limited to the ones listed below, but shall be a complete installation. For details, see Bridge Structures Girder Eastbound, typical Details sheets.
   - Terminate already installed 50 pair telephone cable in Telephone Terminal Box. See sheets E-961, E-963 and E-965.
   - Furnish and install the 15kV cables into existing cable tray shown on this drawing. See sheet E-837.
   - Furnish and install the TOS fiber optic cables into existing cable tray and conduits shown on this drawing. Pull a 72 fiber in the main tray and terminate in the splice closure. See sheet E-983.
   - Inspect for system ground continuity. See sheets E-839 and E-840.
3. All cable trays, conduits and equipment shown on this drawing are existing. Bold ones are to be used for pulling cable.

SHEET NOTES:

(1) Furnish and install splice cable tray as shown on sheet E-836, plan detail 2.

(2) Mount splice cable tray between diaphragms, and secure properly. See sheet E-836, see section detail 4.

(3) Contractor shall locate the splice cable tray at Station 75+88 as shown on E-811.

(4) Furnish and install 12 fiber optic cables from Fiber Optic Splice Closure to Controller Cabinet. Route via pull box PB-2B. Coil 3m of cable inside Controller Cabinet for connections by others. The coiled end of the fiber optic cables shall be terminated with mated connector. See sheets E-972 and E-973.

DIST	COUNTY	ROUTE	KILOMETER POST TOTAL PROJECT	SHEET No	TOTAL SHEETS
04	SF, Ala	80	12.2/14.3 0.0/4.0	407a 08S33	1204

Syn Yee Chin 03/08/10
REGISTERED ELECTRICAL ENGINEER DATE

05-06-2010
PLANS APPROVAL DATE

REGISTERED PROFESSIONAL ENGINEER
SYN YEE CHIN
No. 18186
Exp. 09/30/2011
ELECTRICAL
STATE OF CALIFORNIA

PB AMERICAS, Inc.
A Parsons Brinckerhoff Company
303 Second St., Suite 700N
San Francisco, CA 94107-1317

The State of California or its officers or agents shall not be responsible for the accuracy or completeness of electronic copies of this plan sheet.

Caltrans now has a web site! To get to the web site, go to http://www.dot.ca.gov

REQUEST FOR INFORMATION NOT ADDRESSED IN THIS CCO REMAIN IN FORCE

MARK	DATE	REVISIONS DESCRIPTIONS	BY	CH'D	CCO#
0	03/08/10	MEP INTEGRATION	SYC	FW	110

CONTRACT CHANGE ORDER NO._____
SHEET _____ OF _____

DETAILS
BRIDGE STRUCTURES GIRDER EASTBOUND SKYWAY STRUCTURES-SERVICE PLATFORM #17E

SCALE AS NOTED

E-830

CALCULATED/ DESIGNED BY	CHECKED BY
SYC	FW
DATE 01/10	01/10
REVISED BY	DATE REVISED

DESIGN OVERSIGHT
BEHZAD GOLEMOHAMMADI

STATE OF CALIFORNIA - DEPARTMENT OF TRANSPORTATION
Caltrans

LAST REVISION 00-00-00
DATE PLOTTED => 06-MAY-2010
TIME PLOTTED => 18:25

FOR REDUCED PLANS ORIGINAL SCALE IS IN MILLIMETERS
0 20 40 60 80
ALL DIMENSIONS ARE IN METERS UNLESS OTHERWISE SHOWN
DGN FILE =>04-0120f1_E-830.dgn
USERNAME =>llorico
CU 04251
EA 0120F1

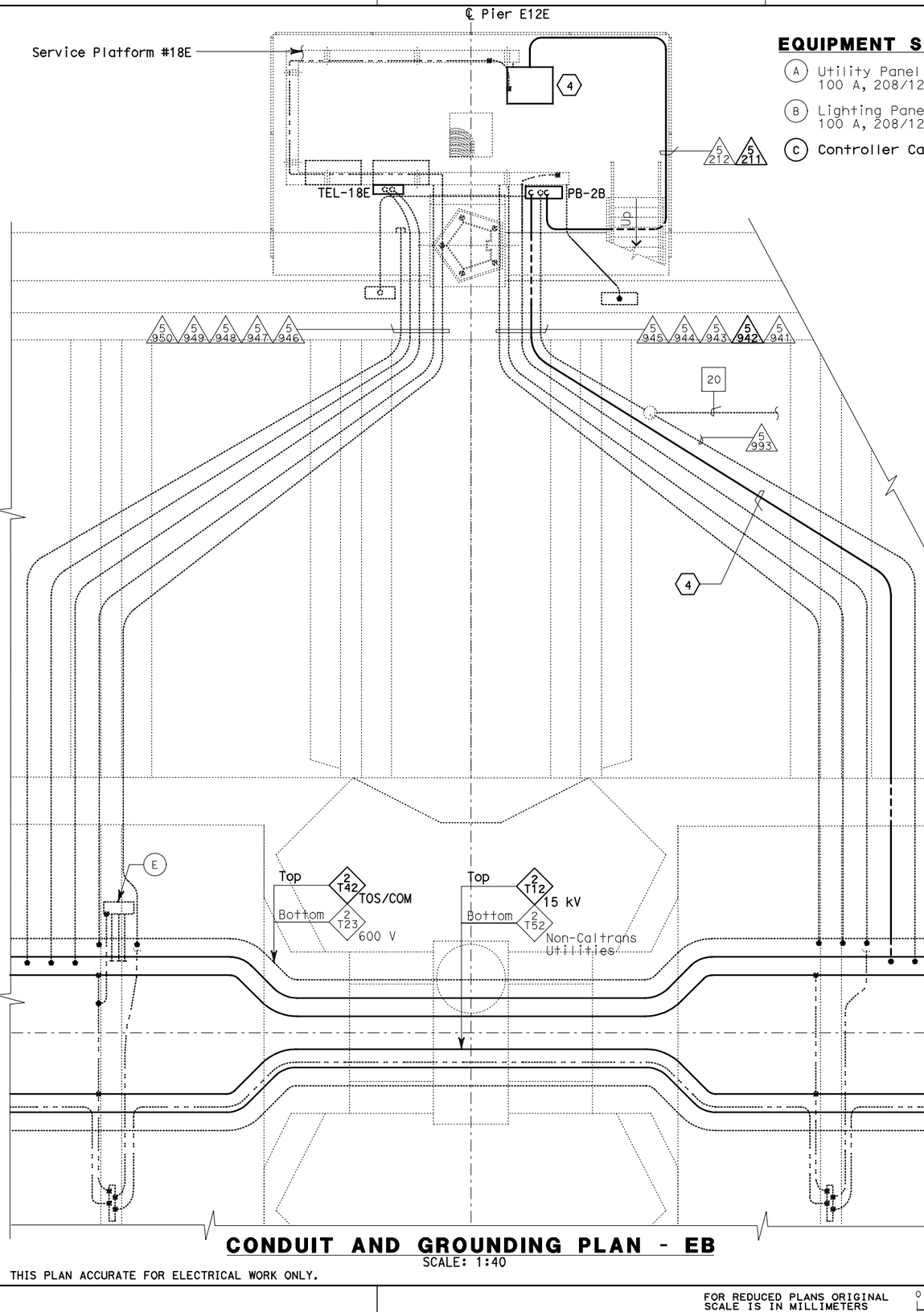

CONDUIT AND GROUNDING PLAN - EB

SCALE: 1:40

EQUIPMENT SCHEDULE:

- (A) Utility Panel UP-240
  100 A, 208/120 V, 3-Phase, 4-Wire
- (B) Lighting Panel LP-260
  100 A, 208/120 V, 3-Phase, 4-Wire
- (C) Controller Cabinet #TOS-18EA
- (D) Telephone Terminal Box #TEL-18E
- (E) Scada Communication Terminal Box #COM-18E
- (F) Fiber Optic Splice Closure #FSC-18E

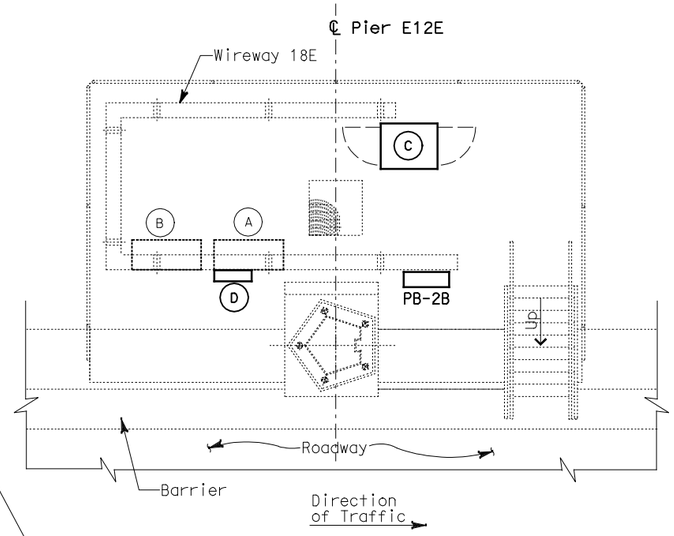

SERVICE PLATFORM #18E EQUIPMENT ARRANGEMENT PLAN

SCALE: 1:40

NOTES:

1. This plan sheet is a record drawing from Skyway Structures contract. The Contractor shall verify the existing installation. See sheet EE-290 from Skyway Structures, contract No. 04-012024.
2. The installed components shall not be limited to the ones listed below, but shall be a complete installation. For details, see Bridge Structures Girder Eastbound, typical Details sheets.
   - Terminate already installed 50 pair telephone cable in Telephone Terminal Box. See sheets E-961, E-963 and E-965.
   - Furnish and install the 15kV cables into existing cable tray shown on this drawing. See sheet E-837.
   - Furnish and install the TOS fiber optic cables into existing cable tray and conduits shown on this drawing. Pull a 72 fiber in the main tray and terminate in the splice closure. See sheet E-983.
   - Inspect for system ground continuity. See sheets E-839 and E-840.
3. All cable trays, conduits and equipment shown on this drawing are existing. Bold ones are to be used for pulling cable.

SHEET NOTES:

1. Furnish and install splice cable tray as shown on sheet E-836, plan detail 2.
2. Mount splice cable tray between diaphragms, and secure properly. See sheet E-836, section detail 4.
3. Contractor shall locate the splice cable tray at Station 77+48 as shown on E-812.
4. Furnish and install 12 fiber optic cables from Fiber Optic Splice Closure to Controller Cabinet. Route via pull box PB-2B. Coil 3m of cable inside Controller Cabinet for connections by others. The coiled end of the fiber optic cables shall be terminated with mated connector. See sheets E-972 and E-973.

DIST	COUNTY	ROUTE	KILOMETER POST TOTAL PROJECT	SHEET No	TOTAL SHEETS
04	SF,Ala	80	12.2/14.3 0.0/4.0	407a 08S34	1204

Syn Yee Chin 03/08/10
REGISTERED ELECTRICAL ENGINEER DATE

SYN YEE CHIN No. 18186 Exp. 09/30/2011 ELECTRICAL — REGISTERED PROFESSIONAL ENGINEER — STATE OF CALIFORNIA

05-06-2010
PLANS APPROVAL DATE

PB AMERICAS, Inc.
A Parsons Brinckerhoff Company
303 Second St., Suite 700N
San Francisco, CA 94107-1317

The State of California or its officers or agents shall not be responsible for the accuracy or completeness of electronic copies of this plan sheet.

Caltrans now has a web site! To get to the web site, go to http://www.dot.ca.gov

REQUEST FOR INFORMATION NOT ADDRESSED IN THIS CCO REMAIN IN FORCE

MARK	DATE	DESCRIPTIONS	BY	CH'D	CCO#
		REVISIONS			
0	03/08/10	MEP INTEGRATION	SYC	FW	110

CONTRACT CHANGE ORDER NO. _____
SHEET _____ OF _____

DETAILS
BRIDGE STRUCTURES GIRDER EASTBOUND SKYWAY STRUCTURES-SERVICE PLATFORM #18E

SCALE AS NOTED

E-831

CALCULATED/ DESIGNED BY	SYC	DATE 01/10	REVISED BY
CHECKED BY	FW	01/10	DATE REVISED

DESIGN OVERSIGHT
BEHZAD GOLEMOHAMMADI

STATE OF CALIFORNIA - DEPARTMENT OF TRANSPORTATION
Caltrans

THIS PLAN ACCURATE FOR ELECTRICAL WORK ONLY.

ALL DIMENSIONS ARE IN METERS UNLESS OTHERWISE SHOWN

FOR REDUCED PLANS ORIGINAL SCALE IS IN MILLIMETERS 0 20 40 60 80

DGN FILE =>04-0120f1_E-831.dgn
USERNAME =>llorico

CU 04251

EA 0120F1

LAST REVISION 00-00-00
DATE PLOTTED => 06-MAY-2010
TIME PLOTTED => 18:26

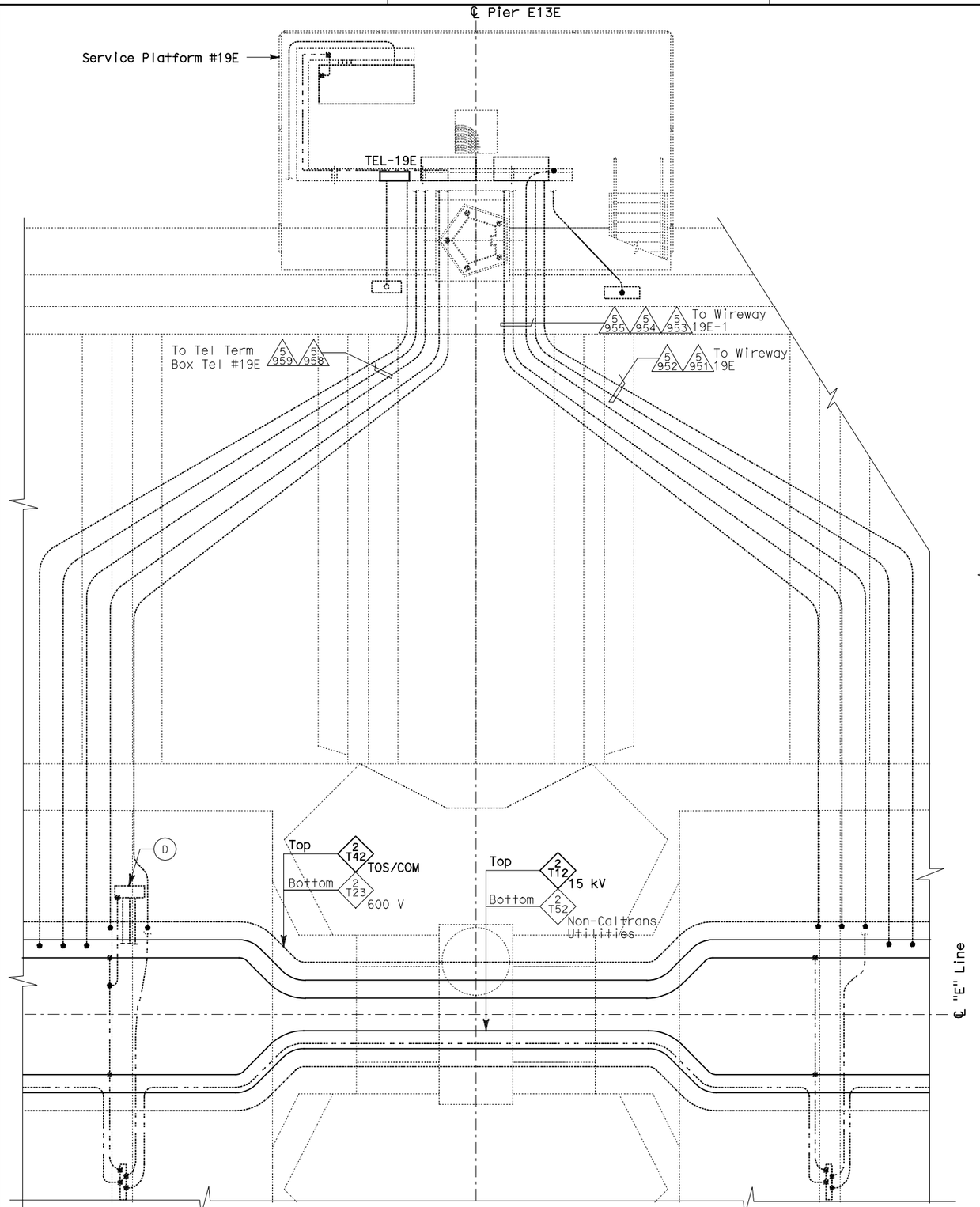

CONDUIT AND GROUNDING PLAN - EB

SCALE: 1:40

THIS PLAN ACCURATE FOR ELECTRICAL WORK ONLY.

EQUIPMENT SCHEDULE:

- (A) Utility Panel UP-241
  100 A, 208/120 V, 3-Phase, 4-Wire
- (B) Lighting Panel LP-261
  100 A, 208/120 V, 3-Phase, 4-Wire
- (C) Telephone Terminal Box #TEL-19E
- (D) Scada Communication Terminal Box #COM-19E
- (E) Strong Motion Recorder #2

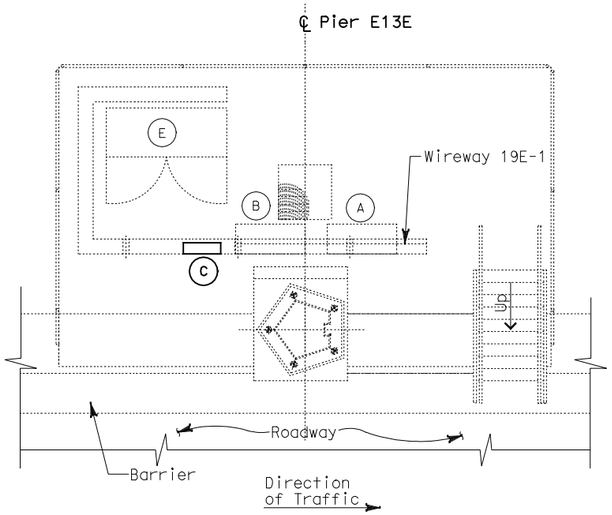

SERVICE PLATFORM #19E
EQUIPMENT ARRANGEMENT PLAN

SCALE: 1:40

NOTES:

1. This plan sheet is a record drawing from Skyway Structures contract. The Contractor shall verify the existing installation. See sheet EE-291 from Skyway Structures, contract No. 04-012024.
2. The installed components shall not be limited to the ones listed below, but shall be a complete installation. For details, see Bridge Structures Girder Eastbound, typical Details sheets.
   - Terminate already installed 50 pair telephone cable in Telephone Terminal Box. See sheets E-961, E-963 and E-965.
   - Furnish and install the 15kV cables into existing cable tray shown on this drawing. See sheet E-837.
   - Furnish and install the TOS fiber optic cables into existing cable tray shown on this drawing. See sheet E-983.
   - Inspect for system ground continuity. See sheets E-839 and E-840.
3. All cable trays, conduits and equipment shown on this drawing are existing. Bold ones are to be used for pulling cable.

ALL DIMENSIONS ARE IN METERS UNLESS OTHERWISE SHOWN

DIST	COUNTY	ROUTE	KILOMETER POST TOTAL PROJECT	SHEET No	TOTAL SHEETS
04	SF,Ala	80	12.2/14.3 0.0/4.0	407a 08S35	1204

Syn Yee Chin 03/08/10
REGISTERED ELECTRICAL ENGINEER DATE

05-06-2010
PLANS APPROVAL DATE

REGISTERED PROFESSIONAL ENGINEER
SYN YEE CHIN
No. 18186
Exp. 09/30/2011
ELECTRICAL
STATE OF CALIFORNIA

PB AMERICAS, Inc.
A Parsons Brinckerhoff Company
303 Second St., Suite 700N
San Francisco, CA 94107-1317

The State of California or its officers or agents shall not be responsible for the accuracy or completeness of electronic copies of this plan sheet.

Caltrans now has a web site! To get to the web site, go to http://www.dot.ca.gov

REQUEST FOR INFORMATION NOT ADDRESSED IN THIS CCO REMAIN IN FORCE

MARK	DATE	DESCRIPTIONS	BY	CH'D	CCO#
		REVISIONS			
0	03/08/10	MEP INTEGRATION	SYC	FW	110

CONTRACT CHANGE ORDER NO._____
SHEET_____OF_____

DETAILS
BRIDGE STRUCTURES GIRDER EASTBOUND
SKYWAY STRUCTURES-SERVICE PLATFORM #19E

SCALE AS NOTED

E-832

DATE	REVISED BY
01/10	DATE REVISED
FW	SYC
CHECKED BY	CALCULATED/ DESIGNED BY

DESIGN OVERSIGHT
BEHZAD GOLEMOHAMMADI

STATE OF CALIFORNIA - DEPARTMENT OF TRANSPORTATION
Caltrans

FOR REDUCED PLANS ORIGINAL SCALE IS IN MILLIMETERS 0 20 40 60 80

DGN FILE =>04-0120f1_E-832.dgn
USERNAME =>llorico

CU 04251 EA 0120F1

LAST REVISION 00-00-00
DATE PLOTTED => 06-MAY-2010
TIME PLOTTED => 18:26

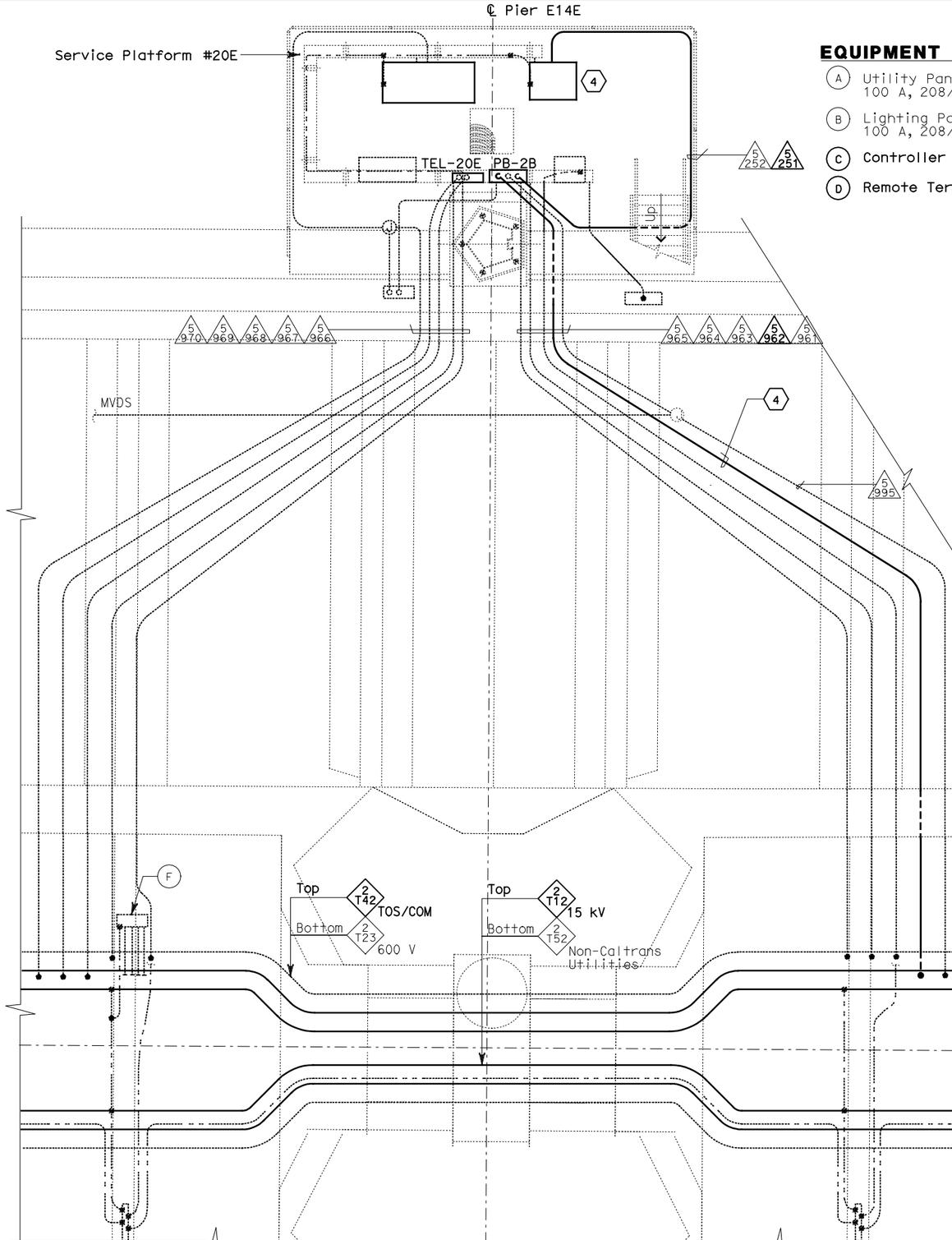

CONDUIT AND GROUNDING PLAN - EB

SCALE: 1:40

THIS PLAN ACCURATE FOR ELECTRICAL WORK ONLY.

EQUIPMENT SCHEDULE:

- (A) Utility Panel UP-242 100 A, 208/120 V, 3-Phase, 4-Wire
- (B) Lighting Panel LP-262 100 A, 208/120 V, 3-Phase, 4-Wire
- (C) Controller Cabinet #TOS-20EA
- (D) Remote Terminal Unit RTU#15E
- (E) Telephone Terminal Box #TEL-20E
- (F) Scada Communication Terminal Box #COM-20E
- (G) Fiber Optic Splice Closure #FSC-20E

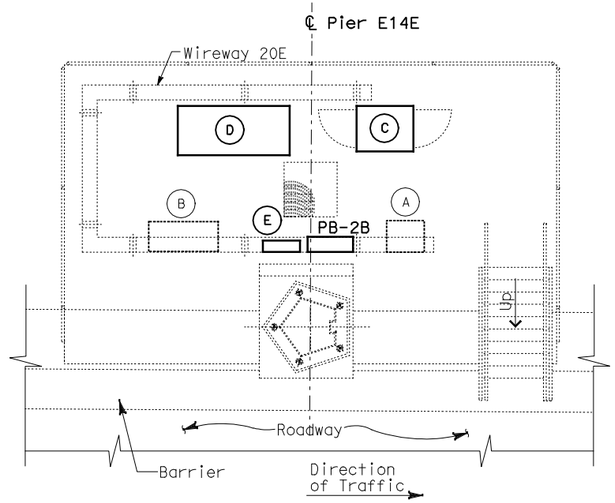

SERVICE PLATFORM #20E EQUIPMENT ARRANGEMENT PLAN

SCALE: 1:40

NOTES:

1. This plan sheet is a record drawing from Skyway Structures contract. The Contractor shall verify the existing installation. See sheet EE-292 from Skyway Structures, contract No. 04-012024.
2. The installed components shall not be limited to the ones listed below, but shall be a complete installation, For details, see Bridge Structures Girder Eastbound, typical Details sheets.
   - Terminate already installed 50 pair telephone cable in Telephone Terminal Box. See sheets E-961, E-963 and E-965.
   - Furnish and install the 15kV cables into existing cable tray shown on this drawing. See sheet E-837.
   - Furnish and install the TOS fiber optic cables into existing cable tray and conduits shown on this drawing. Pull a 72 fiber in the main tray and terminate in the splice closure. See sheet E-983.
   - Inspect for system ground continuity. See sheets E-839 and E-840.
   - Remote Terminal Unit #15E. See sheets E-902, E-931, E-938, and E-939.
3. All cable trays, conduits and equipment shown on this drawing are existing. Bold ones are to be used for pulling cable.

SHEET NOTES:

1. Furnish and install splice cable tray as shown on sheet E-836, plan detail 2.
2. Mount splice cable tray between diaphragms, and secure properly. See sheet E-836, section detail 4.
3. Contractor shall locate the splice cable tray at Station 80+36 as shown on E-814.
4. Furnish and install 12 fiber optic cables from Fiber Optic Splice Closure to Controller Cabinet. Route via pull box PB-2B. Coil 3m of cable inside Controller Cabinet for connections by others. The coiled end of the fiber optic cables shall be terminated with mated connector. See sheets E-972 and E-973.

REQUEST FOR INFORMATION NOT ADDRESSED IN THIS CCO REMAIN IN FORCE					
MARK	DATE	REVISIONS DESCRIPTIONS	BY	CH'D	CCO#
0	03/08/10	MEP INTEGRATION	SYC	FW	110

CONTRACT CHANGE ORDER NO._____
SHEET _____ OF _____

DETAILS
BRIDGE STRUCTURES GIRDER EASTBOUND SKYWAY STRUCTURES-SERVICE PLATFORM #20E

SCALE AS NOTED

E-833

ALL DIMENSIONS ARE IN METERS UNLESS OTHERWISE SHOWN

DIST	COUNTY	ROUTE	KILOMETER POST TOTAL PROJECT	SHEET No	TOTAL SHEETS
04	SF,Ala	80	12.2/14.3 0.0/4.0	407a 08S36	1204

Caltrans Metric

Syn Yee Chin 03/08/10
REGISTERED ELECTRICAL ENGINEER DATE

SYN YEE CHIN No. 18186 Exp. 09/30/2011 ELECTRICAL — REGISTERED PROFESSIONAL ENGINEER — STATE OF CALIFORNIA

05-06-2010
PLANS APPROVAL DATE

PB AMERICAS, Inc.
A Parsons Brinckerhoff Company
303 Second St., Suite 700N
San Francisco, CA 94107-1317

The State of California or its officers or agents shall not be responsible for the accuracy or completeness of electronic copies of this plan sheet.

Caltrans now has a web site! To get to the web site, go to http://www.dot.ca.gov

DESIGN OVERSIGHT	CALCULATED/ DESIGNED BY	CHECKED BY	DATE	REVISED BY
BEHZAD GOLEMOHAMMADI	SYC	FW	01/10	DATE REVISED

STATE OF CALIFORNIA - DEPARTMENT OF TRANSPORTATION
Caltrans

FOR REDUCED PLANS ORIGINAL SCALE IS IN MILLIMETERS 0 20 40 60 80

DGN FILE =>04-0120f1_E-833.dgn
USERNAME =>llorico

CU 04251 EA 0120F1

LAST REVISION 00-00-00
DATE PLOTTED => 06-MAY-2010
TIME PLOTTED => 18:26

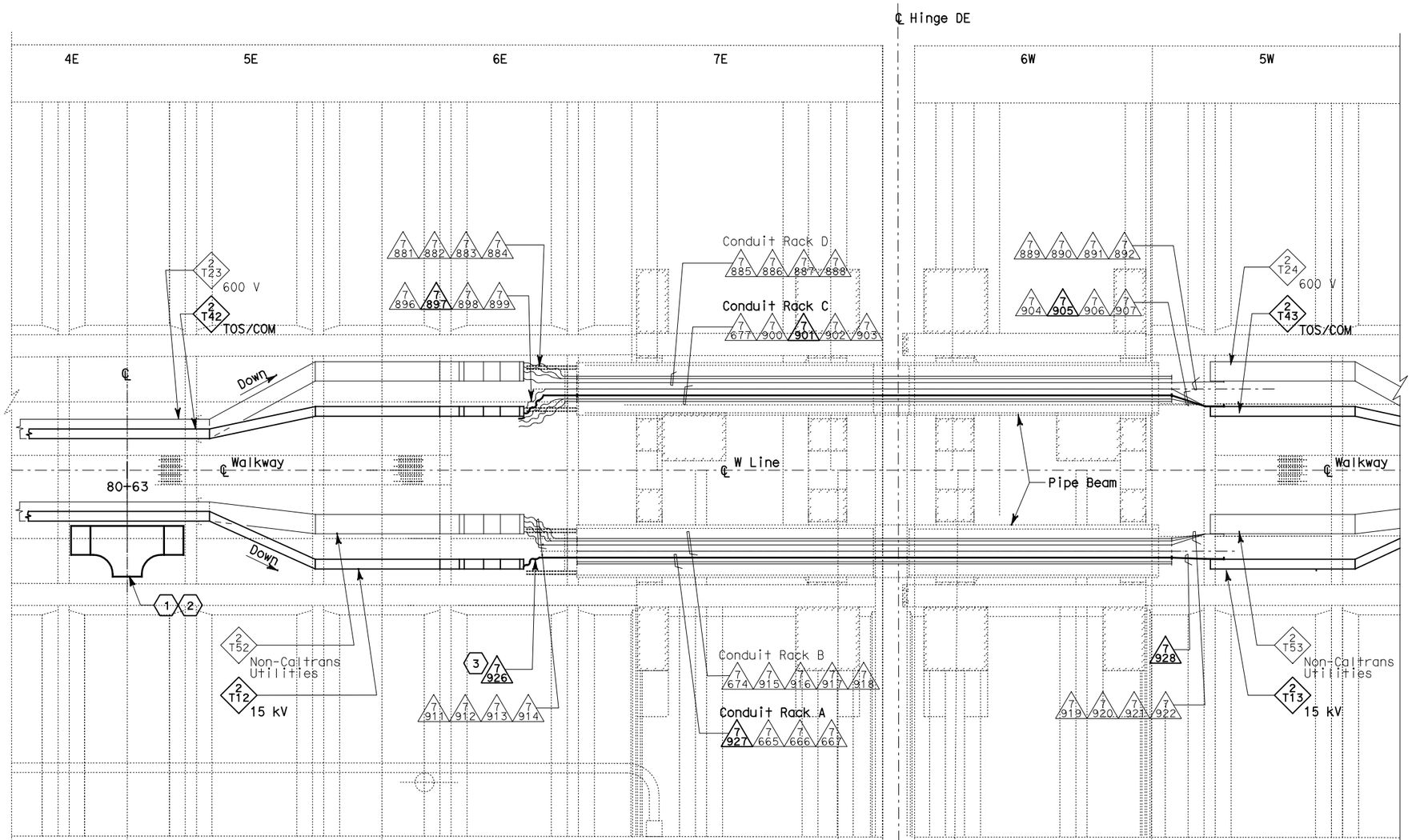

PLAN - HINGE DE

SCALE: 1:75

REQUEST FOR INFORMATION NOT ADDRESSED IN THIS CCO REMAIN IN FORCE					
MARK	DATE	REVISIONS DESCRIPTIONS	SYC BY	FW CH'D	110 CCO#
0	03/08/10	MEP INTEGRATION	SYC	FW	110

CONTRACT CHANGE ORDER NO._____
SHEET _____ OF _____

THIS PLAN ACCURATE FOR ELECTRICAL WORK ONLY.

ALL DIMENSIONS ARE IN METERS UNLESS OTHERWISE SHOWN

Caltrans Metric

DIST	COUNTY	ROUTE	KILOMETER POST TOTAL PROJECT	SHEET No	TOTAL SHEETS
04	SF, Ala	80	12.2/14.3 0.0/4.0	407a 08S37	1204

Syn Yee Chin 03/08/10
REGISTERED ELECTRICAL ENGINEER DATE

REGISTERED PROFESSIONAL ENGINEER — SYN YEE CHIN No. 18186 Exp. 09/30/2011 ELECTRICAL — STATE OF CALIFORNIA

05-06-2010
PLANS APPROVAL DATE

PB AMERICAS, Inc.
A Parsons Brinckerhoff Company
303 Second St., Suite 700N
San Francisco, CA 94107-1317

The State of California or its officers or agents shall not be responsible for the accuracy or completeness of electronic copies of this plan sheet.

Caltrans now has a web site! To get to the web site, go to http://www.dot.ca.gov

NOTES:

1. This plan sheet is a record drawing from Skyway Structures contract. The Contractor shall verify the existing installation. See sheet EE-303A from Skyway Structures, contract No. 04-012024.
2. The installed components shall not be limited to the ones listed below, but shall be a complete installation. For details, see Bridge Structures Girder Eastbound, typical Details sheets.
   - Furnish and install the 15kV cables into existing cable trays and conduits shown on this drawing. See sheet E-837.
   - Furnish and install fiber optic cables into existing cable trays and conduits shown on this drawing. See sheet E-983.
   - Inspect for system ground continuity. See sheets E-839 and E-840.
3. All cable trays and conduits shown on this drawing are existing. Bold ones are to be used for pulling cable.

SHEET NOTES:

(1) Furnish and install splice cable tray as shown on sheet E-836, plan detail 1.

(2) Mount splice cable tray between diaphragms at station 80+63 as shown on E-814, and secure properly. See sheet E-836, section detail 4.

(3) In order to be able to pull the 15 kV cable, the Contractor shall disassemble the 15 kV flexible conduit installation. The 15 kV flexible conduit shall be reinstalled after the 15 kV cable has been pulled.

DETAILS
BRIDGE STRUCTURES GIRDER EASTBOUND
SKYWAY STRUCTURES - HINGE DE

SCALE AS NOTED

E-833A

DESIGN OVERSIGHT	CALCULATED/ DESIGNED BY	CHECKED BY	DRAWN BY	CHECKED BY	DATE REVISED
BEHZAD GOLEMOHAMMADI	SYC	FW	01/10	01/10	

STATE OF CALIFORNIA - DEPARTMENT OF TRANSPORTATION
Caltrans

LAST REVISION 00-00-00
DATE PLOTTED => 06-MAY-2010
TIME PLOTTED => 18:26

FOR REDUCED PLANS ORIGINAL SCALE IS IN MILLIMETERS 0 20 40 60 80

DGN FILE =>04-0120f1_E-833A.dgn
USERNAME =>llorico

CU 04251

EA 0120F1

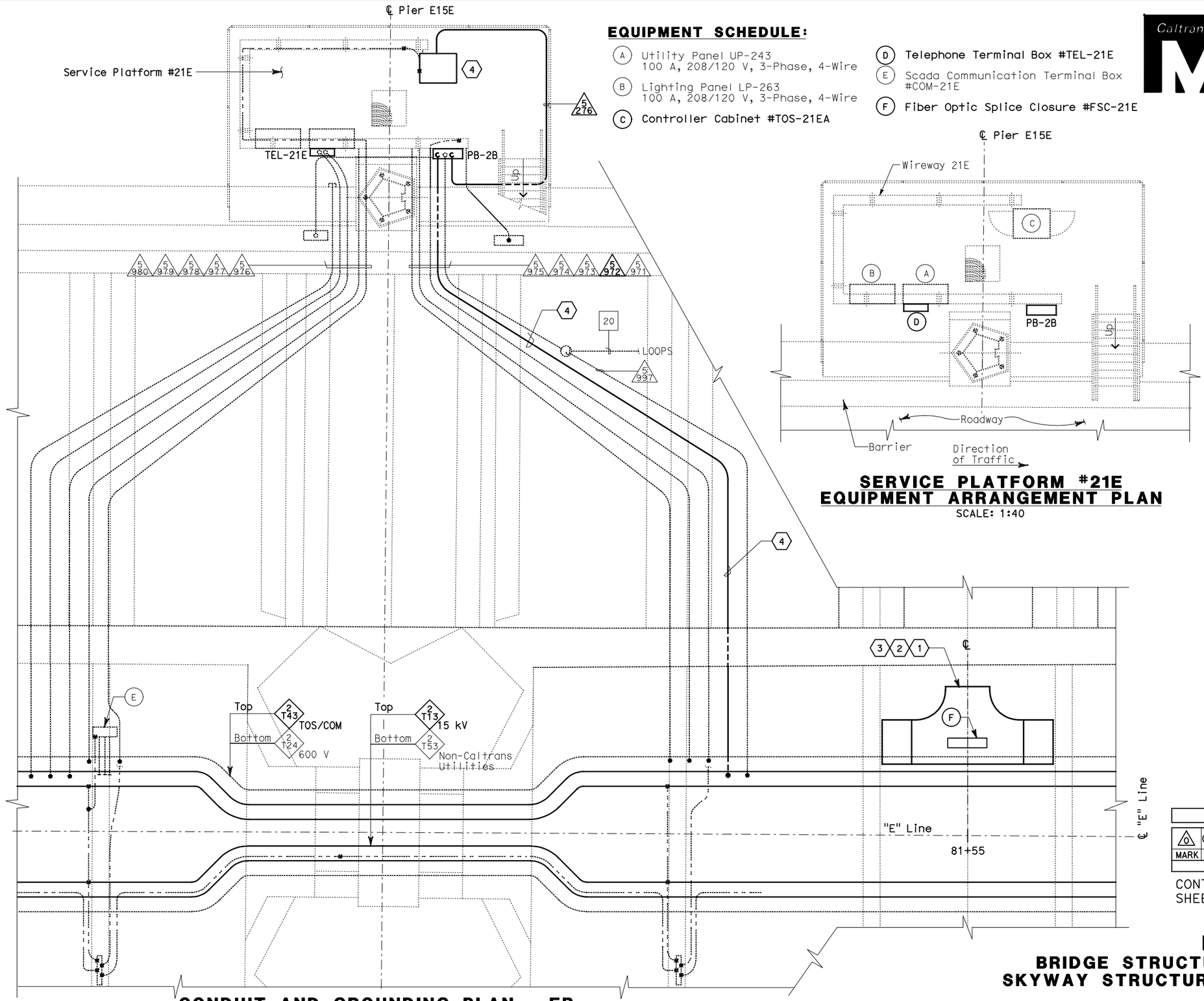

CONDUIT AND GROUNDING PLAN - EB

SCALE: 1:40

THIS PLAN ACCURATE FOR ELECTRICAL WORK ONLY.

EQUIPMENT SCHEDULE:

- (A) Utility Panel UP-243
  100 A, 208/120 V, 3-Phase, 4-Wire
- (B) Lighting Panel LP-263
  100 A, 208/120 V, 3-Phase, 4-Wire
- (C) Controller Cabinet #TOS-21EA
- (D) Telephone Terminal Box #TEL-21E
- (E) Scada Communication Terminal Box #COM-21E
- (F) Fiber Optic Splice Closure #FSC-21E

SERVICE PLATFORM #21E EQUIPMENT ARRANGEMENT PLAN

SCALE: 1:40

NOTES:

1. This plan sheet is a record drawing from Skyway Structures contract. The Contractor shall verify the existing installation. See sheet EE-293 from Skyway Structures, contract No. 04-012024.
2. The installed components shall not be limited to the ones listed below, but shall be a complete installation, For details, see Bridge Structures Girder Eastbound, typical Details sheets.
   - Terminate already installed 50 pair telephone cable in Telephone Terminal Box. See sheets E-961, E-963 and E-965.
   - Furnish and install the 15kV cables into existing cable tray shown on this drawing. See sheet E-837.
   - Furnish and install the TOS fiber optic cables into existing cable tray as shown on this drawing. See sheets E-815 and E-983.
   - Inspect for system ground continuity. See sheets E-839 and E-840.
3. All cable trays, conduits and equipment shown on this drawing are existing. Bold ones are to be used for pulling cable.

SHEET NOTES:

1. Furnish and install splice cable tray as shown on sheet E-836, plan detail 2.
2. Mount splice cable tray between diaphragms, and secure properly. See sheet E-836, section detail 4.
3. Contractor shall locate the splice cable tray at Station 81+55 as shown on sheet E-815.
4. Furnish and install 12 fiber optic cables from Fiber Optic Splice Closure to Controller Cabinet. Route via pull box PB-2B. Coil 3m of cable inside Controller Cabinet for connections by others. The coiled end of the fiber optic cables shall be terminated with mated connector. See sheets E-972 and E-973.

REQUEST FOR INFORMATION NOT ADDRESSED IN THIS CCO REMAIN IN FORCE					
MARK	DATE	DESCRIPTIONS	BY	CH'D	CCO#
		REVISIONS			
0	03/08/10	MEP INTEGRATION	SYC	FW	110

CONTRACT CHANGE ORDER NO._____
SHEET _____ OF _____

DETAILS
BRIDGE STRUCTURES GIRDER EASTBOUND SKYWAY STRUCTURES-SERVICE PLATFORM #21E

SCALE AS NOTED

E-834

ALL DIMENSIONS ARE IN METERS UNLESS OTHERWISE SHOWN

DIST	COUNTY	ROUTE	KILOMETER POST TOTAL PROJECT	SHEET No	TOTAL SHEETS
04	SF, Ala	80	12.2/14.3 0.0/4.0	407a 08S38	1204

Syn Yee Chin 03/08/10
REGISTERED ELECTRICAL ENGINEER DATE

05-06-2010
PLANS APPROVAL DATE

REGISTERED PROFESSIONAL ENGINEER
SYN YEE CHIN
No. 18186
Exp. 09/30/2011
ELECTRICAL
STATE OF CALIFORNIA

PB AMERICAS, Inc.
A Parsons Brinckerhoff Company
303 Second St., Suite 700N
San Francisco, CA 94107-1317

The State of California or its officers or agents shall not be responsible for the accuracy or completeness of electronic copies of this plan sheet.

Caltrans now has a web site! To get to the web site, go to http://www.dot.ca.gov

STATE OF CALIFORNIA - DEPARTMENT OF TRANSPORTATION
Caltrans

DESIGN OVERSIGHT
BEHZAD GOLEMOHAMMADI

CALCULATED/ DESIGNED BY
CHECKED BY

MARK	DATE	REVISED BY	DATE REVISED
	01/10	SYC	01/10
		FW	

LAST REVISION 00-00-00
DATE PLOTTED => 06-MAY-2010
TIME PLOTTED => 18:26

FOR REDUCED PLANS ORIGINAL SCALE IS IN MILLIMETERS 0 20 40 60 80

DGN FILE =>04-0120f1_E-834.dgn
USERNAME =>llorico

CU 04251

EA 0120F1

DIST	COUNTY	ROUTE	KILOMETER POST TOTAL PROJECT	SHEET No	TOTAL SHEETS
04	SF,Ala	80	12.2/14.3 0.0/4.0	407a 08S39	1204

Syn Yee Chin 03/08/10
REGISTERED ELECTRICAL ENGINEER DATE

05-06-2010
PLANS APPROVAL DATE

REGISTERED PROFESSIONAL ENGINEER SYN YEE CHIN No. 18186 Exp. 09/30/2011 ELECTRICAL STATE OF CALIFORNIA

PB AMERICAS, Inc.
A Parsons Brinckerhoff Company
303 Second St., Suite 700N
San Francisco, CA 94107-1317

The State of California or its officers or agents shall not be responsible for the accuracy or completeness of electronic copies of this plan sheet.

Caltrans now has a web site! To get to the web site, go to http://www.dot.ca.gov

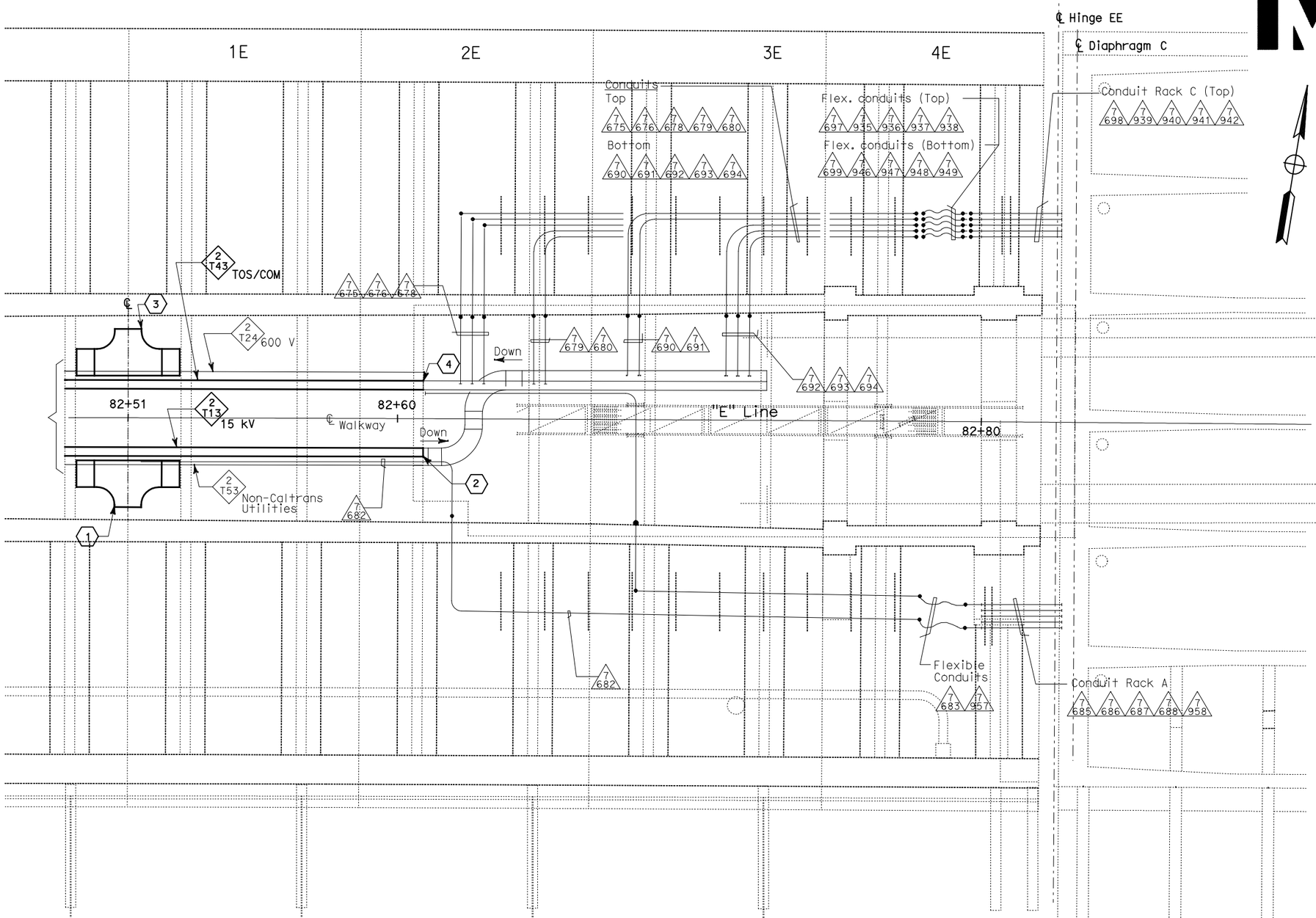

NOTES:

1. This plan sheet is a record drawing from Oakland Touchdown 1 contract. The Contractor shall verify the existing installation. See sheet E-59 from Oakland Touchdown 1, contract No. 04-0120L4.
2. The installed components shall not be limited to the ones listed below, but shall be a complete installation. For details, see Bridge Structures Girder Eastbound, typical Details sheets.
   - Furnish and install the 15kV cables into existing cable tray shown on this drawing. See sheet E-837.
   - Furnish and install the fiber optic cable into existing cable tray shown on this drawing. See sheet E-983 and E-984.
3. All cable trays and conduits shown on this drawing are existing. Bold ones are to be used for pulling cable.

SHEET NOTES:

1. Furnish and install splice cable tray as shown on sheet E-836A, Detail 6.
2. Furnish and install 15 kV cables with length up to this point for splicing by others.
3. Furnish and install splice cable tray as shown on sheet E-836A, Detail 7.
4. Furnish and install fiber optic cable with length up to this point for splicing by others.

PLAN - HINGE EE

SCALE: 1:75

REQUEST FOR INFORMATION NOT ADDRESSED IN THIS CCO REMAIN IN FORCE

MARK	DATE	DESCRIPTIONS	BY	CH'D	CCO#
0	03/08/10	MEP INTEGRATION	SYC	FW	110

REVISIONS

CONTRACT CHANGE ORDER NO._____
SHEET _____ OF _____

DETAILS
BRIDGE STRUCTURES GIRDER EASTBOUND SKYWAY STRUCTURES-HINGE EE

SCALE: AS NOTED

E-835

THIS PLAN ACCURATE FOR ELECTRICAL WORK ONLY.

ALL DIMENSIONS ARE IN METERS UNLESS OTHERWISE SHOWN

FOR REDUCED PLANS ORIGINAL SCALE IS IN MILLIMETERS 0 20 40 60 80

DGN FILE =>04-0120f1_E-835.dgn
USERNAME =>llorico

CU 04251 EA 0120F1

STATE OF CALIFORNIA - DEPARTMENT OF TRANSPORTATION
Caltrans

DESIGN OVERSIGHT: BEHZAD GOLEMOHAMMADI

CALCULATED/DESIGNED BY: SYC DATE 01/10
CHECKED BY: FW 01/10
REVISED BY
DATE REVISED

LAST REVISION 00-00-00
DATE PLOTTED => 06-MAY-2010
TIME PLOTTED => 18:26

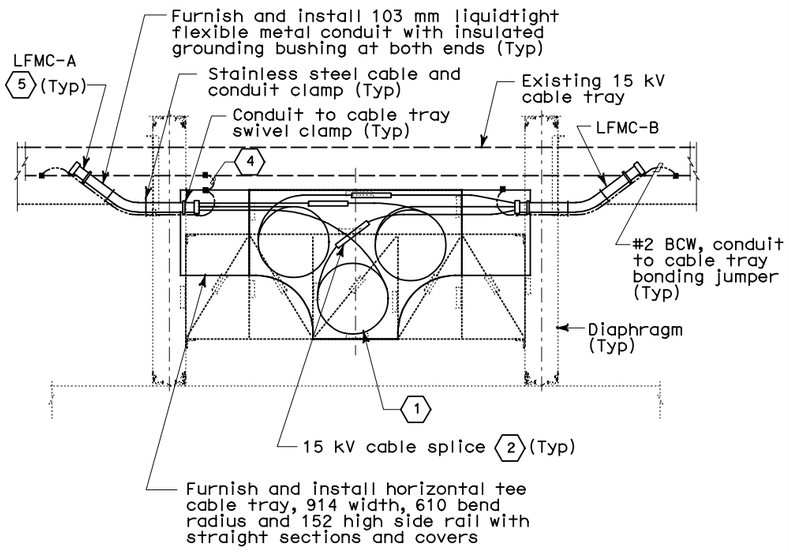

PLAN - DETAIL 1

15 kV Splice Cable Tray installation between diaphragms

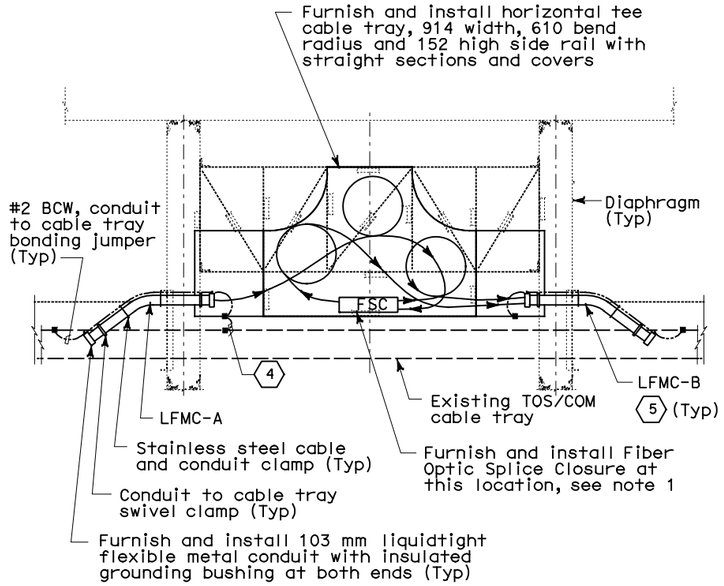

PLAN - DETAIL 2

TOS/COM Splice Cable Tray installation between diaphragms

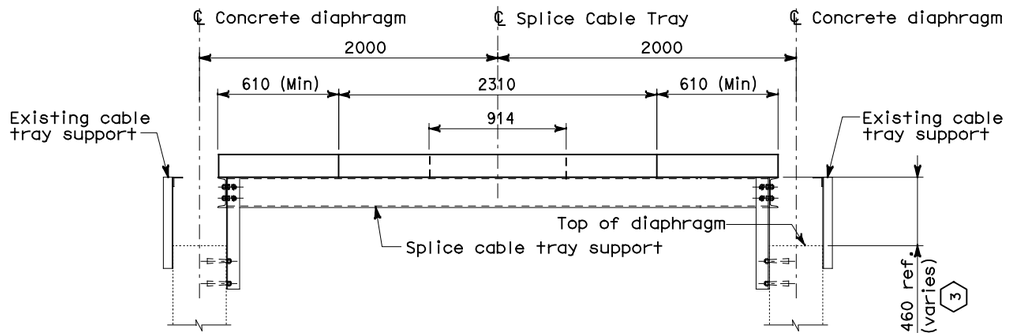

SECTION - DETAIL 4

Splice Cable Tray Support on Concrete Diaphragms
Refer to AS-20 for structural details

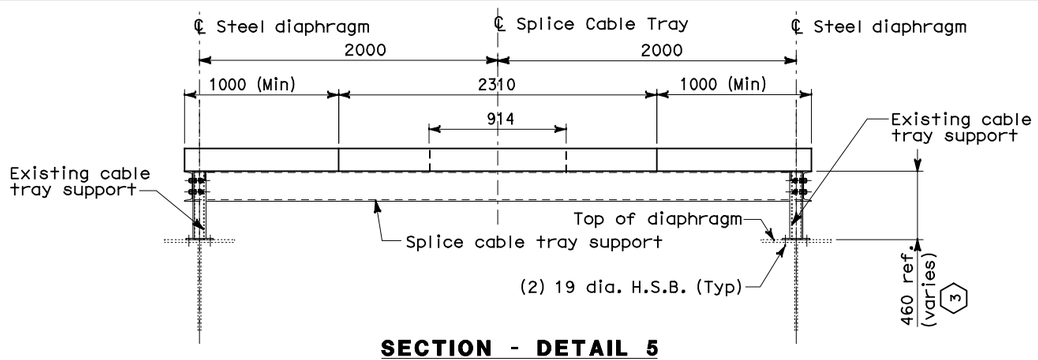

SECTION - DETAIL 5

Splice Cable Tray Support on T-Stiffener Diaphragms
Refer to AS-21 for structural details

THIS PLAN ACCURATE FOR ELECTRICAL WORK ONLY.

TABLE A		
15 kV Splice Cable Tray Conduit Schedule		
Location	LFMC-A	LFMC-B
Sta 62 + 27 (Hinge AE)	7492A	7492B
Sta 68 + 27 (Hinge BE)	2544A	2544B
Sta 74 + 68 (Hinge CE)	2593A	2593B
Sta 80 + 63 (Hinge DE)	7926A	7926B
Sta 82 + 51 (Hinge EE)	7681	-
TOS/COM Splice Cable Tray Conduit Schedule		
Location	LFMC-A	LFMC-B
Sta 62 + 27 (Hinge AE)	7476A	7476B
Sta 63 + 19 (Service Platform #9E)	5852A	5852B
Sta 64 + 73 (Service Platform #10E)	5862A	5862B
Sta 66 + 27 (Service Platform #11E)	5872A	5872B
Sta 67 + 91 (Service Platform #12E)	5882A	5882B
Sta 69 + 47 (Service Platform #13E)	5891A	5891B
Sta 72 + 68 (Service Platform #15E)	5912A	5912B
Sta 74 + 28 (Service Platform #16E)	5922A	5922B
Sta 75 + 88 (Service Platform #17E)	5932A	5932B
Sta 77 + 48 (Service Platform #18E)	5942A	5942B
Sta 80 + 36 (Service Platform #20E)	5962A	5962B
Sta 81 + 55 (Service Platform #21E)	5972A	5972B
Sta 82 + 51 (Hinge EE)	7676A	7676B

Caltrans Metric

DIST	COUNTY	ROUTE	KILOMETER POST TOTAL PROJECT	SHEET No	TOTAL SHEETS
04	SF, Ala	80	12.2/14.3 0.0/4.0	407a 08S40	1204

Syn Yee Chin 03/08/10
REGISTERED ELECTRICAL ENGINEER DATE

REGISTERED PROFESSIONAL ENGINEER
SYN YEE CHIN
No. 18186
Exp. 09/30/2011
ELECTRICAL
STATE OF CALIFORNIA

05-06-2010
PLANS APPROVAL DATE

PB AMERICAS, Inc.
A Parsons Brinckerhoff Company
303 Second St., Suite 700N
San Francisco, CA 94107-1317

The State of California or its officers or agents shall not be responsible for the accuracy or completeness of electronic copies of this plan sheet.

Caltrans now has a web site! To get to the web site, go to http://www.dot.ca.gov

NOTES:

1. For fiber optic splice detail, see sheet E-972.

SHEET NOTES:

1. Minimum cable bend radius shall be 12 times the diameter of the cable. Provide 6.5 meter cable slack per phase. For shield grounding see sheet E-836A, Detail 3.
2. The 15 kV cable splice shall not project above the cable tray side rails. Locate splice at near mid-point of coiled cable.
3. Contractor to verify dimensions and make adjustment to the support to suit field condition as required.
4. Cable tray bonding jumper assembly shall be Cooper B-Line Catalog #99-40 or approved equal. Mounting hardware shall be hot dipped galvanized steel, ribbed neck carriage bolt, serrated flange hex nut, flat and lock washers.
5. See Table A for conduit location and designation number.

REQUEST FOR INFORMATION NOT ADDRESSED IN THIS CCO REMAIN IN FORCE

MARK	DATE	REVISIONS DESCRIPTIONS	BY	CH'D	CCO#
0	03/08/10	MEP INTEGRATION	RG SYC	FW	110

CONTRACT CHANGE ORDER NO._____
SHEET _____ OF _____

DETAILS
BRIDGE STRUCTURES GIRDER EASTBOUND GIRDER TYPICAL DETAILS

NO SCALE

E-836

ALL DIMENSIONS ARE IN MILLIMETERS UNLESS OTHERWISE SHOWN

REVISED BY	DATE REVISED
SYC	01/10
FW	01/10

CALCULATED/DESIGNED BY
CHECKED BY

DESIGN OVERSIGHT
BEHZAD GOLEMOHAMMADI

STATE OF CALIFORNIA - DEPARTMENT OF TRANSPORTATION
Caltrans

LAST REVISION 00-00-00
DATE PLOTTED => 06-MAY-2010
TIME PLOTTED => 18:26

FOR REDUCED PLANS ORIGINAL SCALE IS IN MILLIMETERS 0 20 40 60 80

DGN FILE =>04-0120f1_E-836.dgn
USERNAME =>llorico

CU 04251

EA 0120F1

DIST	COUNTY	ROUTE	KILOMETER POST TOTAL PROJECT	SHEET No	TOTAL SHEETS
04	SF,Ala	80	12.2/14.3 0.0/4.0	407a 08S41	1204

Caltrans Metric

Syn Yee Chin 03/08/10
REGISTERED ELECTRICAL ENGINEER DATE

05-06-2010
PLANS APPROVAL DATE

REGISTERED PROFESSIONAL ENGINEER SYN YEE CHIN No. 18186 Exp. 09/30/2011 ELECTRICAL STATE OF CALIFORNIA

PB AMERICAS, Inc.
A Parsons Brinckerhoff Company
303 Second St., Suite 700N
San Francisco, CA 94107-1317

The State of California or its officers or agents shall not be responsible for the accuracy or completeness of electronic copies of this plan sheet.

Caltrans now has a web site! To get to the web site, go to http://www.dot.ca.gov

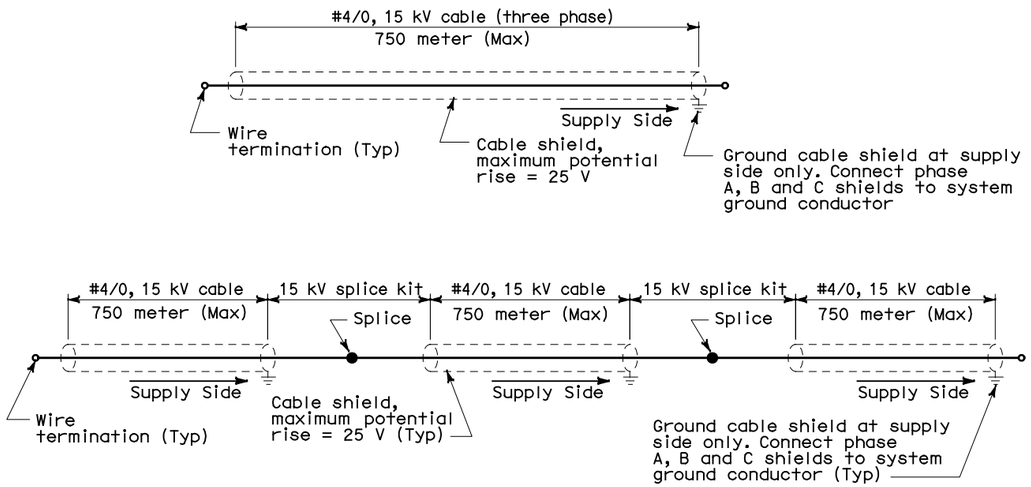

SHIELD GROUNDING - DETAIL 3

NOTES:

1. For splice cable tray support details, see sheet E-836.

SHEET NOTES:

1. Cable tray bonding jumper assembly shall be Cooper B-Line Catalog #99-40 or approved equal. Mounting hardware shall be hot dipped galvanized steel, ribbed neck carriage bolt, serrated flange hex nut, flat and lock washers.
2. See sheet E-836, Table A for conduit location and designation number.

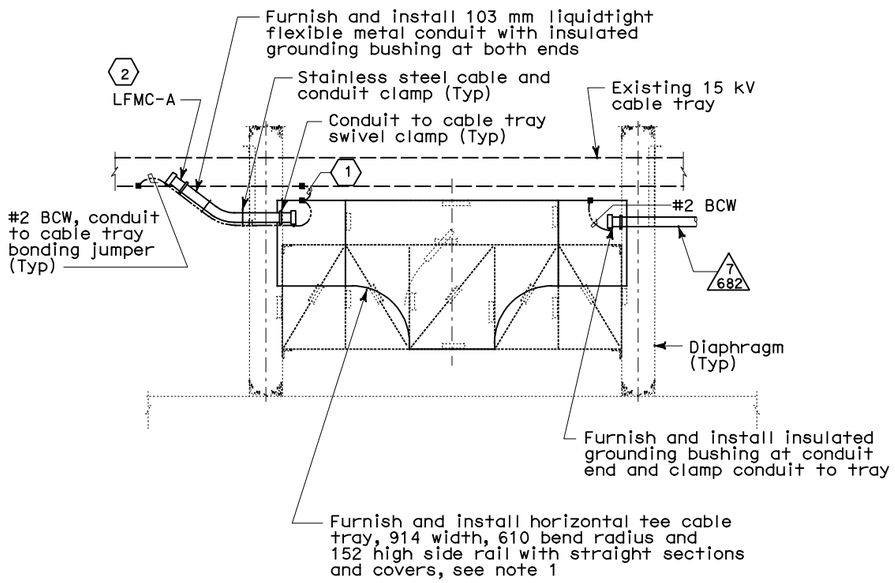

PLAN - DETAIL 6

15 kV Splice Cable Tray installation between diaphragms
See E-835 for Splice Cable Tray Location

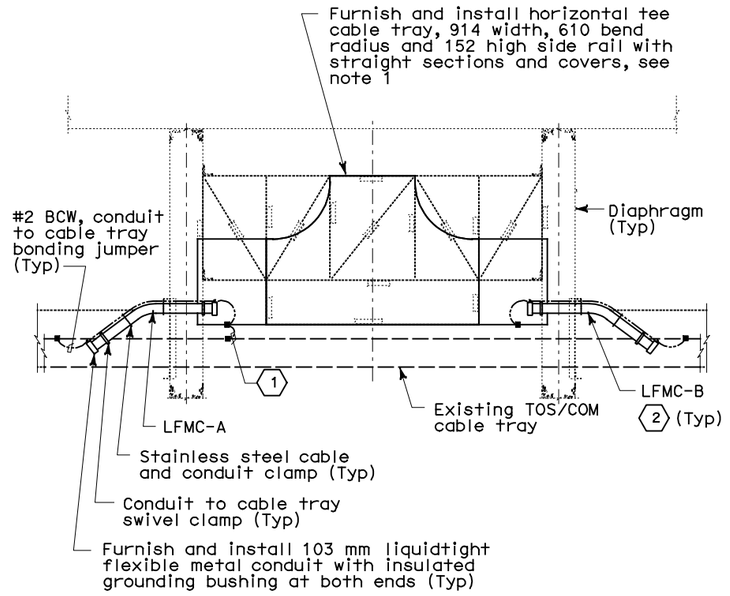

PLAN - DETAIL 7

TOS/COM Splice Cable Tray installation between diaphragms

REQUEST FOR INFORMATION NOT ADDRESSED IN THIS CCO REMAIN IN FORCE

MARK	DATE	DESCRIPTIONS	BY	CH'D	CCO#
0	03/08/10	MEP INTEGRATION	RG SYC	FW	110

REVISIONS

CONTRACT CHANGE ORDER NO._____
SHEET_____ OF _____

DETAILS
BRIDGE STRUCTURES GIRDER EASTBOUND
GIRDER TYPICAL DETAILS
NO SCALE

E-836A

THIS PLAN ACCURATE FOR ELECTRICAL WORK ONLY.

ALL DIMENSIONS ARE IN MILLIMETERS UNLESS OTHERWISE SHOWN

STATE OF CALIFORNIA - DEPARTMENT OF TRANSPORTATION
Caltrans

DESIGN OVERSIGHT: BEHZAD GOLEMOHAMMADI
CALCULATED/DESIGNED BY: SYC DATE 01/10
CHECKED BY: FW 01/10
REVISED BY
DATE REVISED

LAST REVISION 00-00-00
DATE PLOTTED => 06-MAY-2010
TIME PLOTTED => 18:27

FOR REDUCED PLANS ORIGINAL SCALE IS IN MILLIMETERS 0 20 40 60 80
DGN FILE =>04-0120f1_E-836A.dgn
USERNAME =>llorico
CU 04251
EA 0120F1

DIST	COUNTY	ROUTE	KILOMETER POST TOTAL PROJECT	SHEET No	TOTAL SHEETS
04	SF, Ala	80	12.2/14.3 0.0/4.0	407a 08S42	1204

Syn Yee Chin 03/08/10
REGISTERED ELECTRICAL ENGINEER DATE

05-06-2010
PLANS APPROVAL DATE

REGISTERED PROFESSIONAL ENGINEER
SYN YEE CHIN
No. 18186
Exp. 09/30/2011
ELECTRICAL
STATE OF CALIFORNIA

PB AMERICAS, Inc.
A Parsons Brinckerhoff Company
303 Second St., Suite 700N
San Francisco, CA 94107-1317

The State of California or its officers or agents shall not be responsible for the accuracy or completeness of electronic copies of this plan sheet.

Caltrans now has a web site! To get to the web site, go to http://www.dot.ca.gov

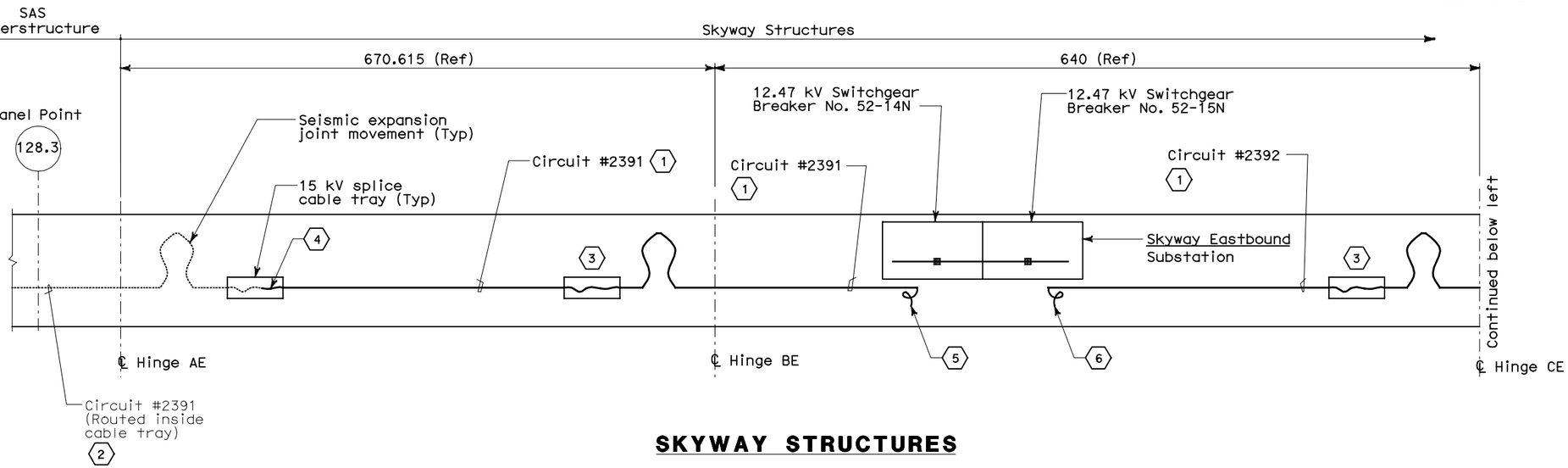

SKYWAY STRUCTURES

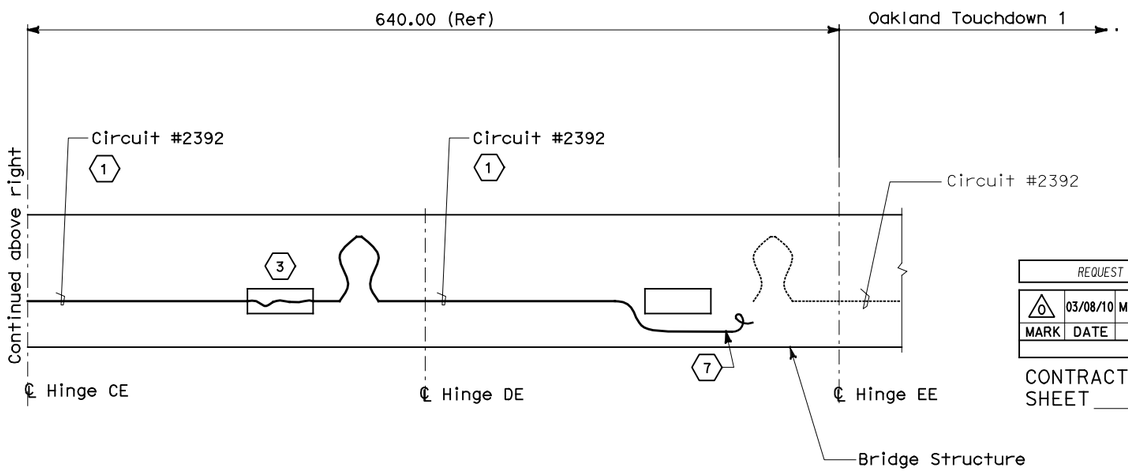

SKYWAY STRUCTURES

REQUEST FOR INFORMATION NOT ADDRESSED IN THIS CCO REMAIN IN FORCE

MARK	DATE	REVISIONS DESCRIPTIONS	BY	CH'D	CCO#
0	03/08/10	MEP INTEGRATION	SYC	FW	110

CONTRACT CHANGE ORDER NO._____
SHEET _____ OF _____

SHEET NOTES:

1. Contractor to furnish and install the cables. The 15 kV cable tray and conduits was installed under Skyway Structures contract.
2. Cables to be installed by others.
3. Contractor to splice the 15 kV cables in the 15 kV splice cable tray.
4. Contractor to splice 15 kV cables for tie-in with 15 kV cables from SAS Superstructure.
5. Contractor to coil 25 m cable length for future terminations to 12.47 kV switchgear. See sheet E-826.
6. Contractor to coil 45 m cable length for future terminations to 12.47 kV switchgear. See sheet E-826.
7. Cables in cable tray for splicing by others.

DETAILS
BRIDGE STRUCTURES GIRDER EASTBOUND
SKYWAY STRUCTURES EB-15 KV RISER DIAGRAM
NO SCALE

E-837

DESIGN OVERSIGHT	CALCULATED/ DESIGNED BY	DRAWN BY	CHECKED BY	DATE	REVISED BY
BEHZAD GOLEMOHAMMADI	SYC	SYC	FW	01/10	DATE REVISED

STATE OF CALIFORNIA - DEPARTMENT OF TRANSPORTATION
Caltrans

THIS PLAN ACCURATE FOR ELECTRICAL WORK ONLY.

ALL DIMENSIONS ARE IN METERS UNLESS OTHERWISE SHOWN

FOR REDUCED PLANS ORIGINAL SCALE IS IN MILLIMETERS 0 20 40 60 80

DGN FILE =>04-0120f1_E-837.dgn
USERNAME =>llorico

CU 04251

EA 0120F1

LAST REVISION 00-00-00
DATE PLOTTED => 06-MAY-2010
TIME PLOTTED => 18:27

DIST	COUNTY	ROUTE	KILOMETER POST TOTAL PROJECT	SHEET No	TOTAL SHEETS
04	SF, Ala	80	12.2/14.3 0.0/4.0	407a 08S43	1204

Syn Yee Chin 03/08/10
REGISTERED ELECTRICAL ENGINEER DATE

05-06-2010
PLANS APPROVAL DATE

REGISTERED PROFESSIONAL ENGINEER
SYN YEE CHIN
No. 18186
Exp. 09/30/2011
ELECTRICAL
STATE OF CALIFORNIA

PB AMERICAS, Inc.
A Parsons Brinckerhoff Company
303 Second St., Suite 700N
San Francisco, CA 94107-1317

The State of California or its officers or agents shall not be responsible for the accuracy or completeness of electronic copies of this plan sheet.

Caltrans now has a web site! To get to the web site, go to http://www.dot.ca.gov

THIS SHEET IS INTENTIONALLY LEFT BLANK

E-838

THIS PLAN ACCURATE FOR ELECTRICAL WORK ONLY.

DESIGN OVERSIGHT	CALCULATED/ DESIGNED BY	SYC	DATE 01/10	REVISED BY
BEHZAD GOLEMOHAMMADI	CHECKED BY	FW	01/10	DATE REVISED

STATE OF CALIFORNIA - DEPARTMENT OF TRANSPORTATION
Caltrans

LAST REVISION 00-00-00
DATE PLOTTED => 06-MAY-2010
TIME PLOTTED => 18:27

FOR REDUCED PLANS ORIGINAL SCALE IS IN MILLIMETERS 0 20 40 60 80

DGN FILE =>04-0120f1_E-838.dgn
USERNAME =>llorico

CU 04251

EA 0120F1

DIST	COUNTY	ROUTE	KILOMETER POST TOTAL PROJECT	SHEET No	TOTAL SHEETS
04	SF, Ala	80	12.2/14.3 0.0/4.0	407a 08S44	1204

Syn Yee Chin 03/08/10
REGISTERED ELECTRICAL ENGINEER DATE

05-06-2010
PLANS APPROVAL DATE

SYN YEE CHIN
No. 18186
Exp. 09/30/2011
ELECTRICAL
REGISTERED PROFESSIONAL ENGINEER
STATE OF CALIFORNIA

PB AMERICAS, Inc.
A Parsons Brinckerhoff Company
303 Second St., Suite 700N
San Francisco, CA 94107-1317

The State of California or its officers or agents shall not be responsible for the accuracy or completeness of electronic copies of this plan sheet.

Caltrans now has a web site! To get to the web site, go to http://www.dot.ca.gov

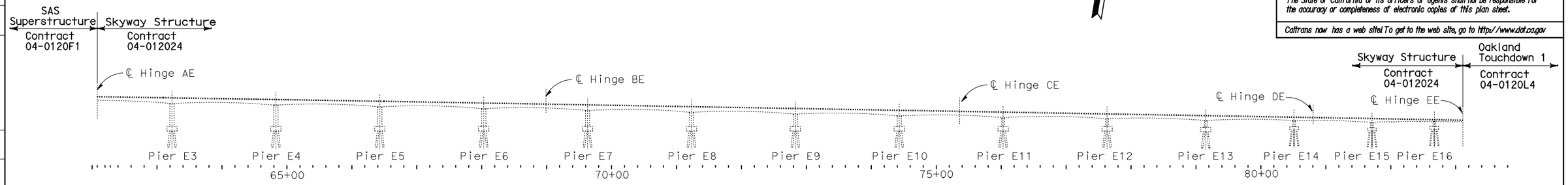

ELEVATION

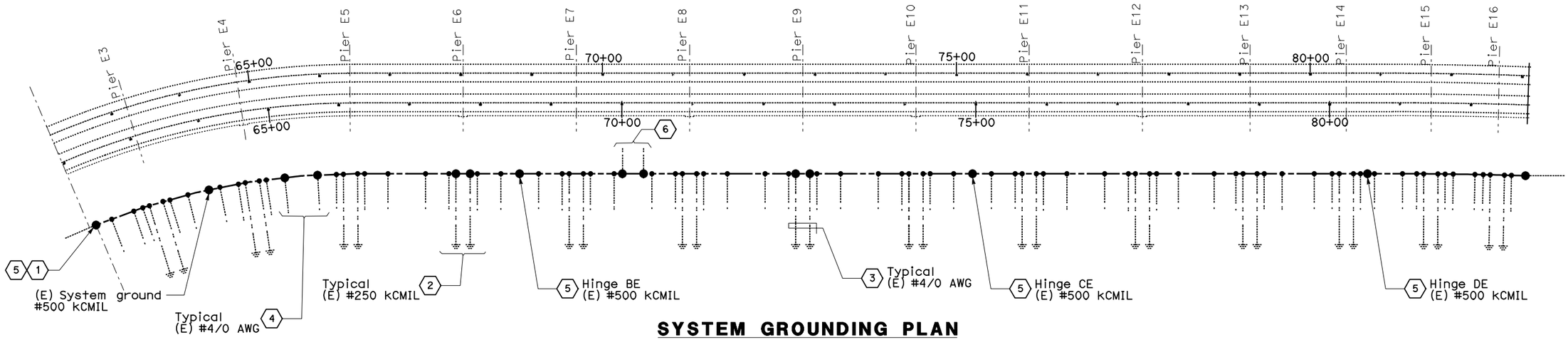

SYSTEM GROUNDING PLAN

NOTES:

1. References:
   - For applicable details see Grounding Detail sheet E-840.
2. The system ground shall be continuously and mechanically connected as noted on the sheet notes. The Contractor shall provide the inspection report to the engineer.

SHEET NOTES:

1. The Contractor shall connect the system ground provided by Skyway contract. The system ground #500 kCMIL shall be exothermically connected from SAS contract.
2. The Contractor shall visually inspect the ground connection to the pier column. The ground connection is #250 kCMIL to the system ground.
3. The Contractor shall visually inspect the ground connection to the service platform. The ground connection is #4/0 AWG, routed inside an existing conduit to the system ground.
4. The Contractor shall visually inspect the ground connection to the cable tray racks. The ground connection is #4/0 AWG, located 1/3 the distance between pier columns.
5. The Contractor shall disconnect and remove the connected system ground routed inside the existing hinge conduits. This ground conductor shall be re-installed together with 15 kV feeder cable. The ground conductors shall be exothermically connected.
6. The Contractor shall visually inspect the ground connections to the ground bar inside the substation. The bar is connected to the system ground.

REQUEST FOR INFORMATION NOT ADDRESSED IN THIS CCO REMAIN IN FORCE

MARK	DATE	DESCRIPTIONS	BY	CH'D	CCO#
		REVISIONS			
0	03/08/10	MEP INTEGRATION	SYC	FW	110

CONTRACT CHANGE ORDER NO._____
SHEET _____ OF _____

DETAILS
BRIDGE STRUCTURES GIRDER EASTBOUND MAIN BRIDGE SYSTEM GROUNDING-EB

SCALE: 1:3000

E-839

THIS PLAN ACCURATE FOR ELECTRICAL WORK ONLY.

ALL DIMENSIONS ARE IN METERS UNLESS OTHERWISE SHOWN

FOR REDUCED PLANS ORIGINAL SCALE IS IN MILLIMETERS 0 20 40 60 80

DGN FILE =>04-0120f1_E-839.dgn
USERNAME =>llorico

CU 04251

EA 0120F1

DESIGN OVERSIGHT
BEHZAD GOLEMOHAMMADI

STATE OF CALIFORNIA - DEPARTMENT OF TRANSPORTATION
Caltrans

CALCULATED/ DESIGNED BY	DATE	REVISED BY	DATE REVISED
CHECKED BY	01/10	FW	01/10
		SYC	

LAST REVISION 00-00-00
DATE PLOTTED => 06-MAY-2010
TIME PLOTTED => 18:27

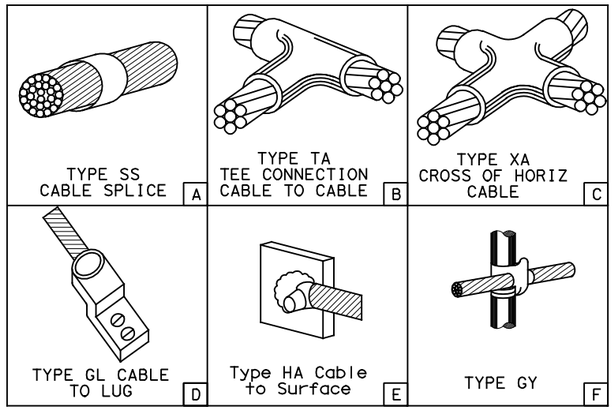

EXOTHERMIC CONNECTIONS (FIG. A THRU F)

DETAIL 1

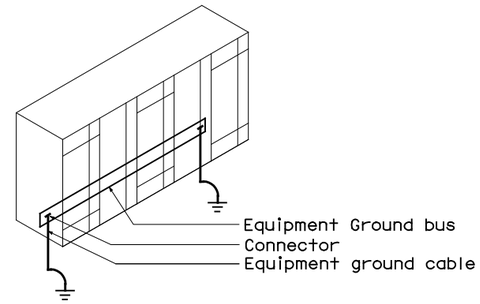

All switchgear, low voltage control centers are furnished with a ground bus. Each end of the ground bus is grounded.

EQUIPMENT GROUND FOR SWITCHGEAR, LVCC

DETAIL 4

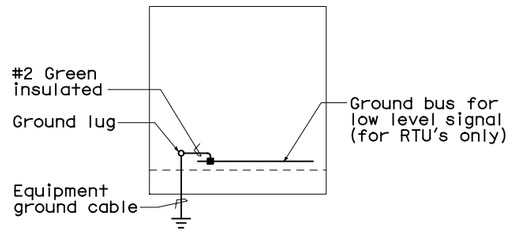

EQUIPMENT GROUND FOR
CONTROL CABINETS AND RTU'S

DETAIL 2

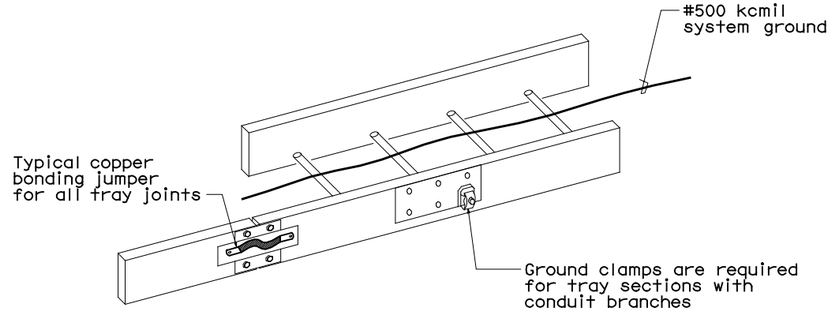

GROUNDING OF METALLIC 15kV CABLE TRAY

DETAIL 5

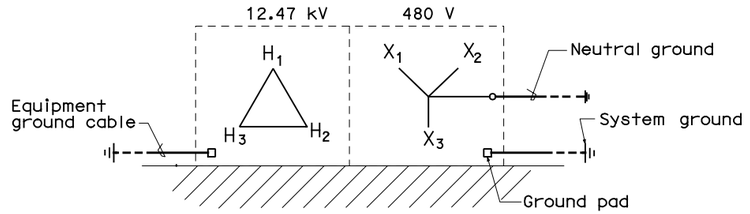

TRANSFORMER GROUNDING

DETAIL 3

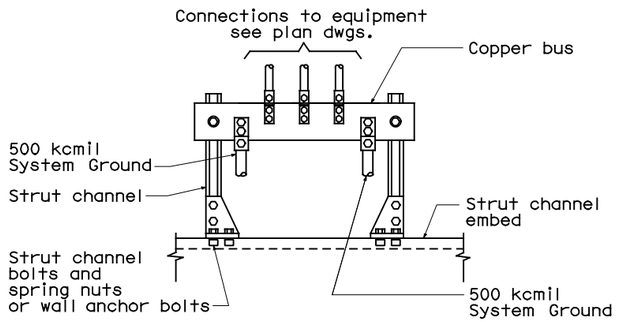

GROUND BAR

DETAIL 6

DIST	COUNTY	ROUTE	KILOMETER POST TOTAL PROJECT	SHEET No	TOTAL SHEETS
04	SF, Ala	80	12.2/14.3 0.0/4.0	407a 08S45	1204

Caltrans Metric

Syn Yee Chin 03/08/10
REGISTERED ELECTRICAL ENGINEER DATE

05-06-2010
PLANS APPROVAL DATE

REGISTERED PROFESSIONAL ENGINEER
SYN YEE CHIN
No. 18186
Exp. 09/30/2011
ELECTRICAL
STATE OF CALIFORNIA

PB AMERICAS, Inc.
A Parsons Brinckerhoff Company
303 Second St., Suite 700N
San Francisco, CA 94107-1317

The State of California or its officers or agents shall not be responsible for the accuracy or completeness of electronic copies of this plan sheet.

Caltrans now has a web site! To get to the web site, go to http://www.dot.ca.gov

MARK	DATE	DESCRIPTIONS	BY	CH'D	CCO#
		REVISIONS			
0	03/08/10	MEP INTEGRATION	SYC	FW	110

REQUEST FOR INFORMATION NOT ADDRESSED IN THIS CCO REMAIN IN FORCE

CONTRACT CHANGE ORDER NO._____
SHEET_____ OF _____

DETAILS
BRIDGE STRUCTURES GIRDER EASTBOUND
TYPICAL GROUNDING INSTALLATION-EB

NO SCALE

E-840

DESIGN OVERSIGHT	CALCULATED/ DESIGNED BY	SYC	DATE 01/10	REVISED BY
BEHZAD GOLEMOHAMMADI	CHECKED BY	FW	01/10	DATE REVISED

STATE OF CALIFORNIA - DEPARTMENT OF TRANSPORTATION
Caltrans

THIS PLAN ACCURATE FOR ELECTRICAL WORK ONLY.

FOR REDUCED PLANS ORIGINAL SCALE IS IN MILLIMETERS 0 20 40 60 80

DGN FILE =>04-0120f1_E-840.dgn
USERNAME =>llorico

CU 04251 EA 0120F1

LAST REVISION 00-00-00
DATE PLOTTED => 06-MAY-2010
TIME PLOTTED => 18:27

DIST	COUNTY	ROUTE	KILOMETER POST TOTAL PROJECT	SHEET No	TOTAL SHEETS
04	SF, Ala	80	12.2/14.3 0.0/4.0	407a 09S01	1204

Syn Yee Chin 03/08/10
REGISTERED ELECTRICAL ENGINEER DATE

05-06-2010
PLANS APPROVAL DATE

SYN YEE CHIN No. 18186 Exp. 09/30/2011 ELECTRICAL — REGISTERED PROFESSIONAL ENGINEER — STATE OF CALIFORNIA

PB AMERICAS, Inc.
A Parsons Brinckerhoff Company
303 Second St., Suite 700N
San Francisco, CA 94107-1317

The State of California or its officers or agents shall not be responsible for the accuracy or completeness of electronic copies of this plan sheet.

Caltrans now has a web site! To get to the web site, go to http://www.dot.ca.gov

DATE	REVISED BY
0I/I0	DATE REVISED

CALCULATED/ DESIGNED BY	SYC
CHECKED BY	FW

DESIGN OVERSIGHT
BEHZAD GOLEMOHAMMADI

STATE OF CALIFORNIA - DEPARTMENT OF TRANSPORTATION
Caltrans

PLAN

NOTES:

1. This plan sheet is a record drawing from Skyway Structures contract. The Contractor shall verify the exising installation. See sheet EE-116 of Skyway Structures, contract No. 04-012024.
2. Contractor to furnish and install Equipment at the Service Platforms and inside the Substations as shown on the detailed plans.
3. Contractor to work on the Telephone Terminal Box located at each service platform and inside the Substations as noted on detailed plans.

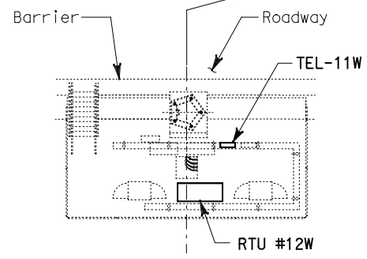

SERVICE PLATFORM #11W

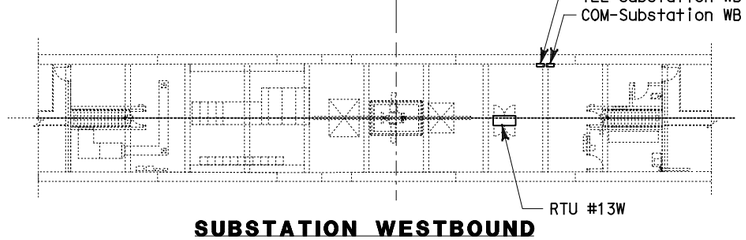

SUBSTATION WESTBOUND

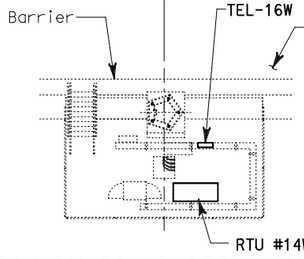

SERVICE PLATFORM #16W

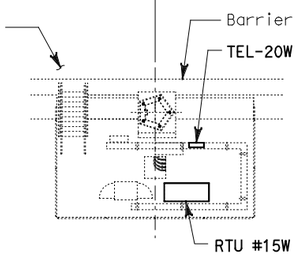

SERVICE PLATFORM #20W

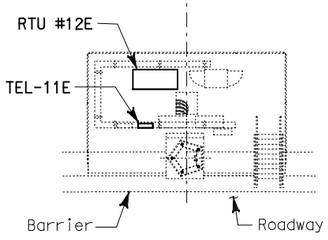

SERVICE PLATFORM #11E

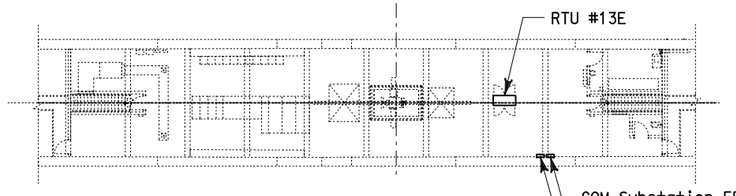

SUBSTATION EASTBOUND

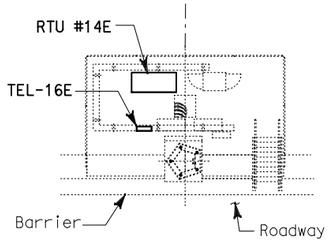

SERVICE PLATFORM #16E

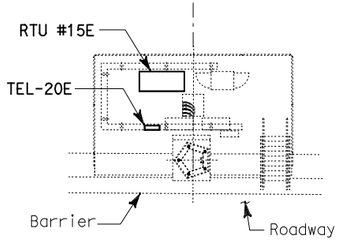

SERVICE PLATFORM #20E

REQUEST FOR INFORMATION NOT ADDRESSED IN THIS CCO REMAIN IN FORCE					
MARK	DATE	REVISIONS DESCRIPTIONS	BY	CH'D	CCO#
0	03/08/10	MEP INTEGRATION	JE	FW	110

CONTRACT CHANGE ORDER NO._____
SHEET _____ OF _____

SCADA REMOTE TERMINAL UNIT SYSTEM
SKYWAY STRUCTURES
EQUIPMENT LOCATIONS

NO SCALE

E-900

THIS PLAN ACCURATE FOR ELECTRICAL WORK ONLY.

LAST REVISION 00-00-00 | DATE PLOTTED => 25-MAY-2010 | TIME PLOTTED => 15:02

FOR REDUCED PLANS ORIGINAL SCALE IS IN MILLIMETERS 0 20 40 60 80

DGN FILE =>04-0120f1_E-900.dgn
USERNAME =>llorico

CU 04251

EA 0120F1

DIST	COUNTY	ROUTE	KILOMETER POST TOTAL PROJECT	SHEET No	TOTAL SHEETS
04	SF, Ala	80	12.2/14.3 0.0/4.0	407a 09S02	1204

Syn Yee Chin 03/08/10
REGISTERED ELECTRICAL ENGINEER DATE

05-06-2010
PLANS APPROVAL DATE

REGISTERED PROFESSIONAL ENGINEER
SYN YEE CHIN
No. 18186
Exp. 09/30/2011
ELECTRICAL
STATE OF CALIFORNIA

PB AMERICAS, Inc.
A Parsons Brinckerhoff Company
303 Second St., Suite 700N
San Francisco, CA 94107-1317

The State of California or its officers or agents shall not be responsible for the accuracy or completeness of electronic copies of this plan sheet.

Caltrans now has a web site! To get to the web site, go to http://www.dot.ca.gov

SKYWAY STRUCTURE
Contract 04-012024

OAKLAND TOUCHDOWN 1

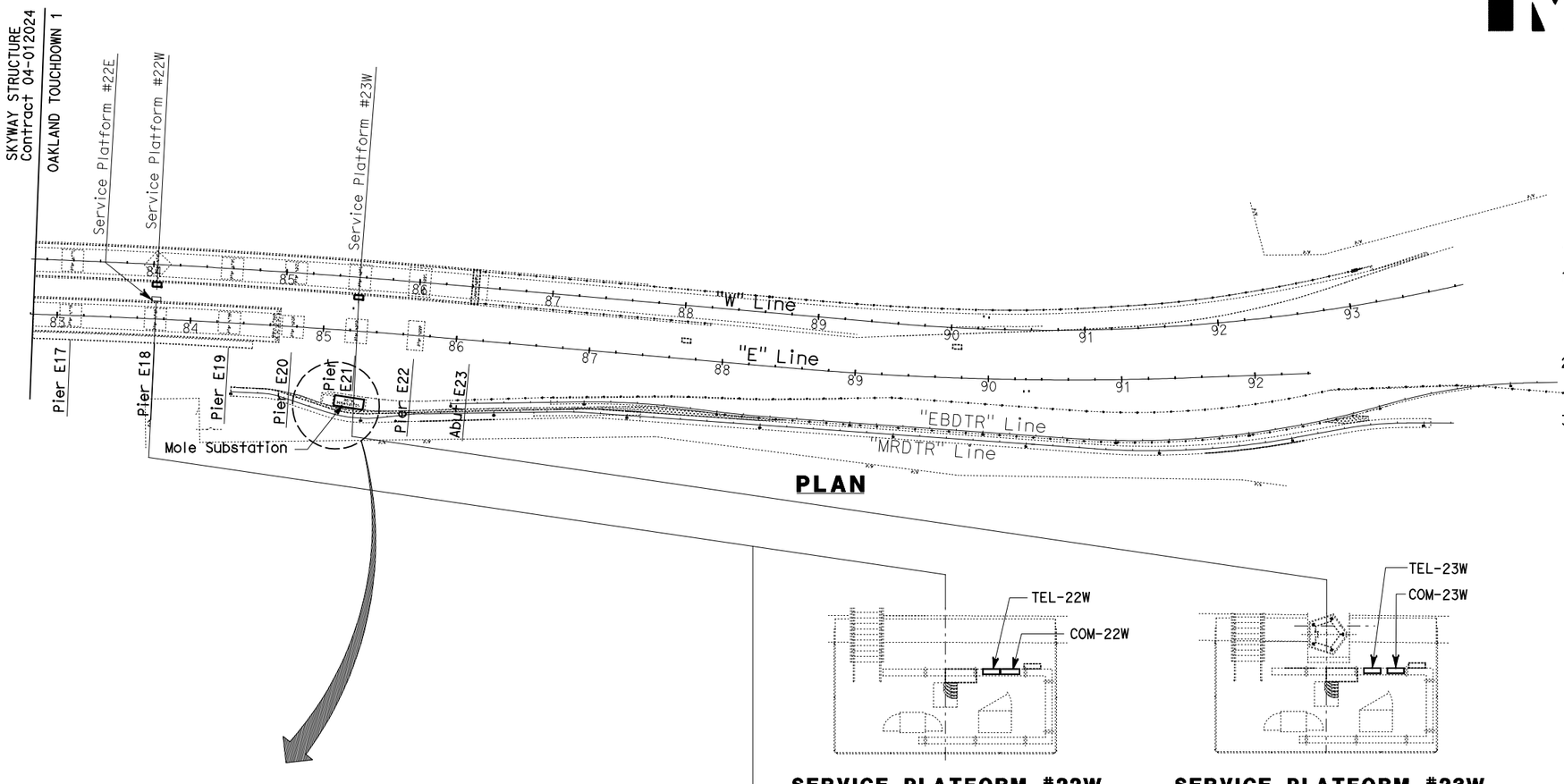

PLAN

NOTES:

1. This plan sheet is a record drawing from Oakland Structures contract. The Contractor shall verify the existing installation. See sheet E-154 of Oakland Touchdown 1, contract No. 04-0120L4.
2. Contractor to furnish and install equipment at the Service Platforms and inside the Substations as shown on the detailed plans.
3. Contractor to work on the telephone terminal box located at each Service Platform as noted on detailed plans.

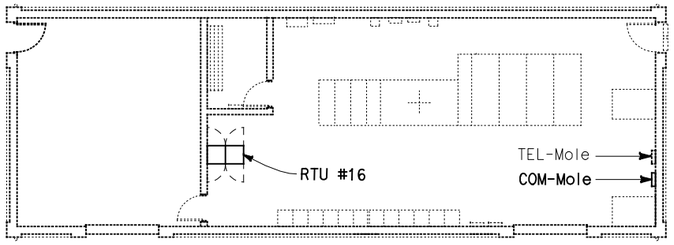

MOLE SUBSTATION

SERVICE PLATFORM #22W

SERVICE PLATFORM #23W

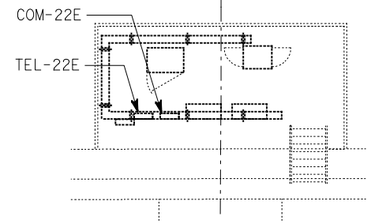

SERVICE PLATFORM #22E

REQUEST FOR INFORMATION NOT ADDRESSED IN THIS CCO REMAIN IN FORCE

MARK	DATE	DESCRIPTIONS	BY	CH'D	CCO#
		REVISIONS			
0	03/08/10	MEP INTEGRATION	JE	FW	110

CONTRACT CHANGE ORDER NO._____
SHEET _____ OF _____

SCADA REMOTE TERMINAL UNIT SYSTEM
OAKLAND APPROACH STRUCTURES
EQUIPMENT LOCATIONS

SCALE: 1:200

E-901

THIS PLAN ACCURATE FOR ELECTRICAL WORK ONLY.

ALL DIMENSIONS ARE IN METERS UNLESS OTHERWISE SHOWN

FOR REDUCED PLANS ORIGINAL SCALE IS IN MILLIMETERS 0 20 40 60 80

DGN FILE =>04-0120f1_E-901.dgn
USERNAME =>llorico

CU 04251

EA 0120F1

STATE OF CALIFORNIA - DEPARTMENT OF TRANSPORTATION
Caltrans

DESIGN OVERSIGHT
BEHZAD GOLEMOHAMMADI

CALCULATED/ DESIGNED BY
CHECKED BY

DATE 01/10 REVISED BY
SYC FW

DATE REVISED

LAST REVISION 00-00-00
DATE PLOTTED => 25-MAY-2010
TIME PLOTTED => 15:03

DIST	COUNTY	ROUTE	KILOMETER POST TOTAL PROJECT	SHEET No	TOTAL SHEETS
04	SF, Ala	80	12.2/14.3 0.0/4.0	407a 09S03	1204

Syn Yee Chin 03/08/10
REGISTERED ELECTRICAL ENGINEER DATE

05-06-2010
PLANS APPROVAL DATE

REGISTERED PROFESSIONAL ENGINEER
SYN YEE CHIN
No. 18186
Exp. 09/30/2011
ELECTRICAL
STATE OF CALIFORNIA

PB AMERICAS, Inc.
A Parsons Brinckerhoff Company
303 Second St., Suite 700N
San Francisco, CA 94107-1317

The State of California or its officers or agents shall not be responsible for the accuracy or completeness of electronic copies of this plan sheet.

Caltrans now has a web site! To get to the web site, go to http://www.dot.ca.gov

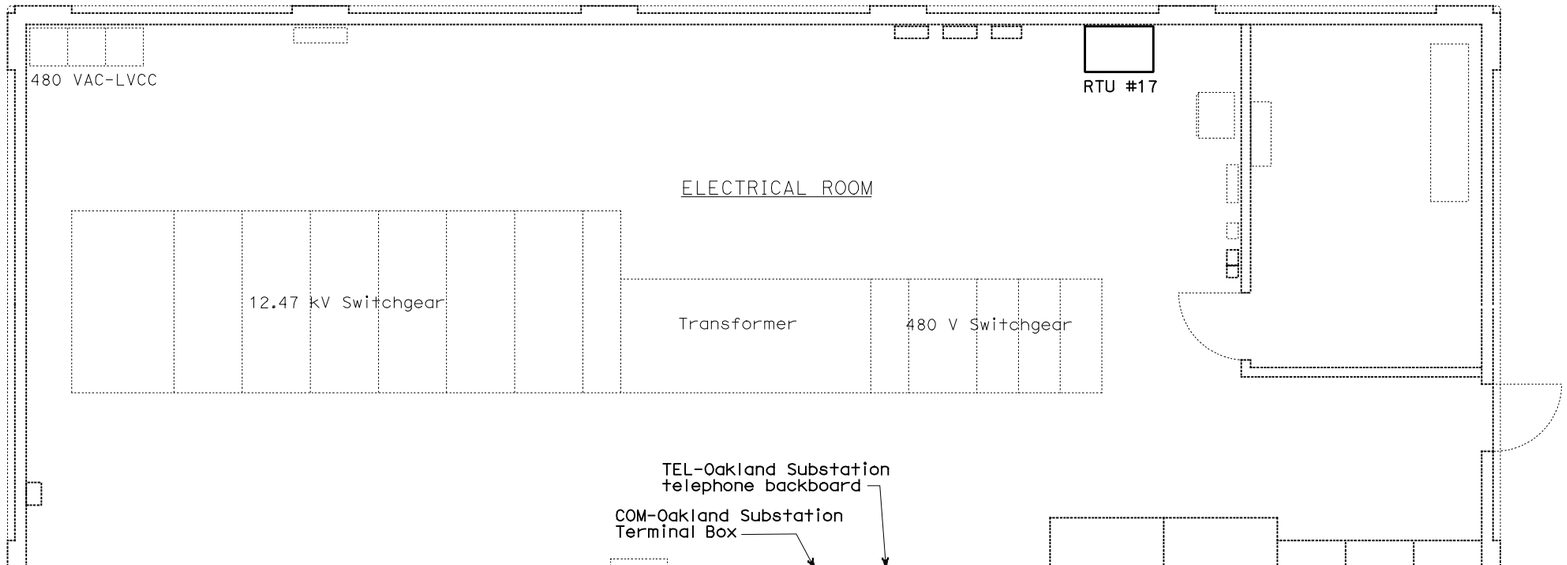

FLOOR PLAN
SCALE: 1:40

NOTES:

1. Contractor shall install equipment into RTU #17, Telephone and Communication boxes located as shown on detailed plans.

REQUEST FOR INFORMATION NOT ADDRESSED IN THIS CCO REMAIN IN FORCE

MARK	DATE	DESCRIPTIONS	BY	CH'D	CCO#
		REVISIONS			
0	03/08/10	MEP INTEGRATION	JE	FW	110

CONTRACT CHANGE ORDER NO._____
SHEET _____ OF _____

SCADA REMOTE TERMINAL UNIT SYSTEM
OAKLAND SUBSTATION
EQUIPMENT LOCATIONS
SCALE AS SHOWN

E-901A

DESIGN OVERSIGHT: BEHZAD GOLEMOHAMMADI
STATE OF CALIFORNIA - DEPARTMENT OF TRANSPORTATION
Caltrans

CALCULATED/DESIGNED BY			
CHECKED BY	FW	01/10	DATE REVISED

LAST REVISION 00-00-00
DATE PLOTTED => 25-MAY-2010
TIME PLOTTED => 15:03

THIS PLAN ACCURATE FOR ELECTRICAL WORK ONLY.

ALL DIMENSIONS ARE IN METERS UNLESS OTHERWISE SHOWN

FOR REDUCED PLANS ORIGINAL SCALE IS IN MILLIMETERS 0 20 40 60 80

DGN FILE =>04-0120f1_E-901A.dgn
USERNAME =>llorico

CU 04251

EA 0120F1

SHEET NOTES:

1. Located inside bridge Girder Box.
2. Located at Service Platform.

NOTES:

1. This plan sheet is a record drawing from Skyway Structures Contract. See sheet EE-373 of Skyway Structures, Contract No. 04-012024. The contractor shall verify the existing installation.
2. This plan sheet is included here for overall information on Skyway Structures. Contractor shall work on the equipment per details on other plan in this Contract Change Order.

Caltrans Metric

DIST	COUNTY	ROUTE	KILOMETER POST TOTAL PROJECT	SHEET No	TOTAL SHEETS
04	SF,Ala	80	12.2/14.3 0.0/4.0	407a 09S04	1204

Syn Yee Chin 03/08/10
REGISTERED ELECTRICAL ENGINEER DATE

05-06-2010
PLANS APPROVAL DATE

REGISTERED PROFESSIONAL ENGINEER — SYN YEE CHIN No. 18186 Exp. 09/30/2011 ELECTRICAL — STATE OF CALIFORNIA

PB AMERICAS, Inc.
A Parsons Brinckerhoff Company
303 Second St., Suite 700N
San Francisco, CA 94107-1317

The State of California or its officers or agents shall not be responsible for the accuracy or completeness of electronic copies of this plan sheet.

Caltrans now has a web site! To get to the web site, go to http://www.dot.ca.gov

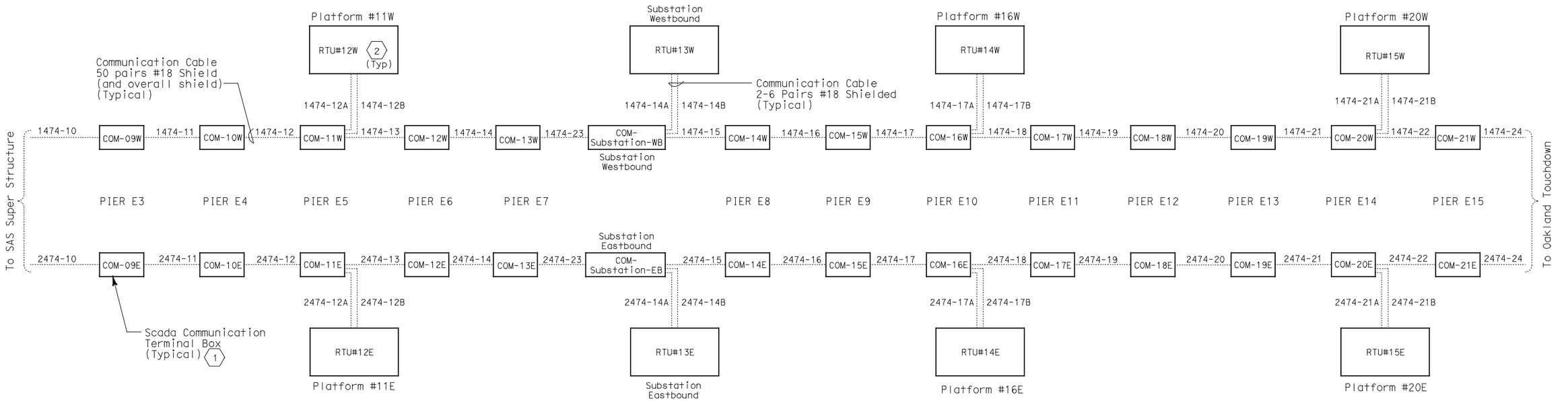

SCADA COMMUNICATION SYSTEM

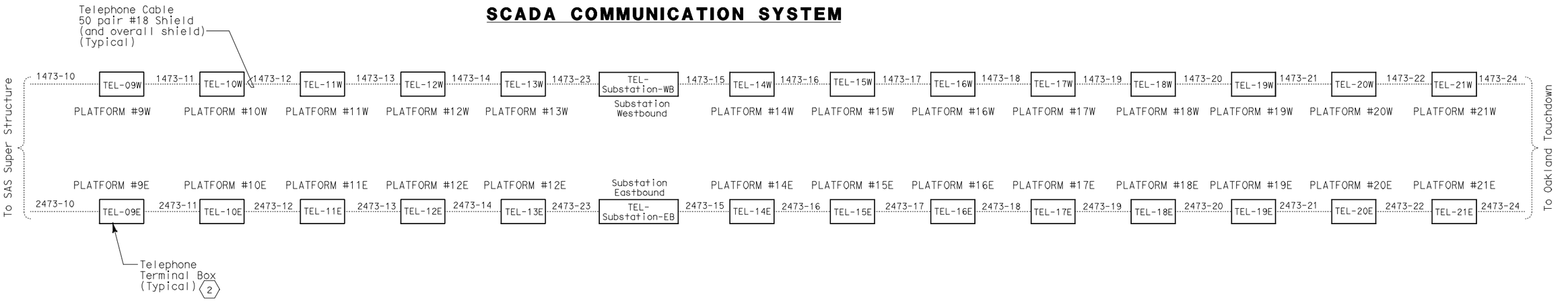

TELEPHONE SYSTEM

REQUEST FOR INFORMATION NOT ADDRESSED IN THIS CCO REMAIN IN FORCE					
MARK	DATE	REVISIONS DESCRIPTIONS	BY	CH'D	CCO#
0	03/08/10	MEP INTEGRATION	JE	FW	110

CONTRACT CHANGE ORDER NO._____
SHEET _____ OF _____

THIS PLAN ACCURATE FOR ELECTRICAL WORK ONLY.

DETAILS
SCADA REMOTE TERMINAL UNIT SYSTEM
SCADA AND TELEPHONE CABLE BLOCK DIAGRAMS

NO SCALE

E-901B

DESIGN OVERSIGHT	CALCULATED/DESIGNED BY	CHECKED BY	DATE 01/10	REVISED BY	DATE REVISED
BEHZAD GOLEMOHAMMADI	SYC	FW	01/10		

STATE OF CALIFORNIA - DEPARTMENT OF TRANSPORTATION
Caltrans

LAST REVISION 00-00-00 | DATE PLOTTED => 25-MAY-2010 | TIME PLOTTED => 15:04

FOR REDUCED PLANS ORIGINAL SCALE IS IN MILLIMETERS 0 20 40 60 80

DGN FILE =>04-0120f1_E-901B.dgn
USERNAME =>llorico

CU 04251 | EA 0120F1

DIST	COUNTY	ROUTE	KILOMETER POST TOTAL PROJECT	SHEET No	TOTAL SHEETS
04	SF, Ala	80	12.2/14.3 0.0/4.0	407a 09S05	1204

Syn Yee Chin 03/08/10
REGISTERED ELECTRICAL ENGINEER DATE

05-06-2010
PLANS APPROVAL DATE

REGISTERED PROFESSIONAL ENGINEER
SYN YEE CHIN
No. 18186
Exp. 09/30/2011
ELECTRICAL
STATE OF CALIFORNIA

PB AMERICAS, Inc.
A Parsons Brinckerhoff Company
303 Second St., Suite 700N
San Francisco, CA 94107-1317

The State of California or its officers or agents shall not be responsible for the accuracy or completeness of electronic copies of this plan sheet.

Caltrans now has a web site! To get to the web site, go to http://www.dot.ca.gov

NOTES:

1. 50 pr. cables have previously been installed. Contractor shall make the terminations into the FSK modems.

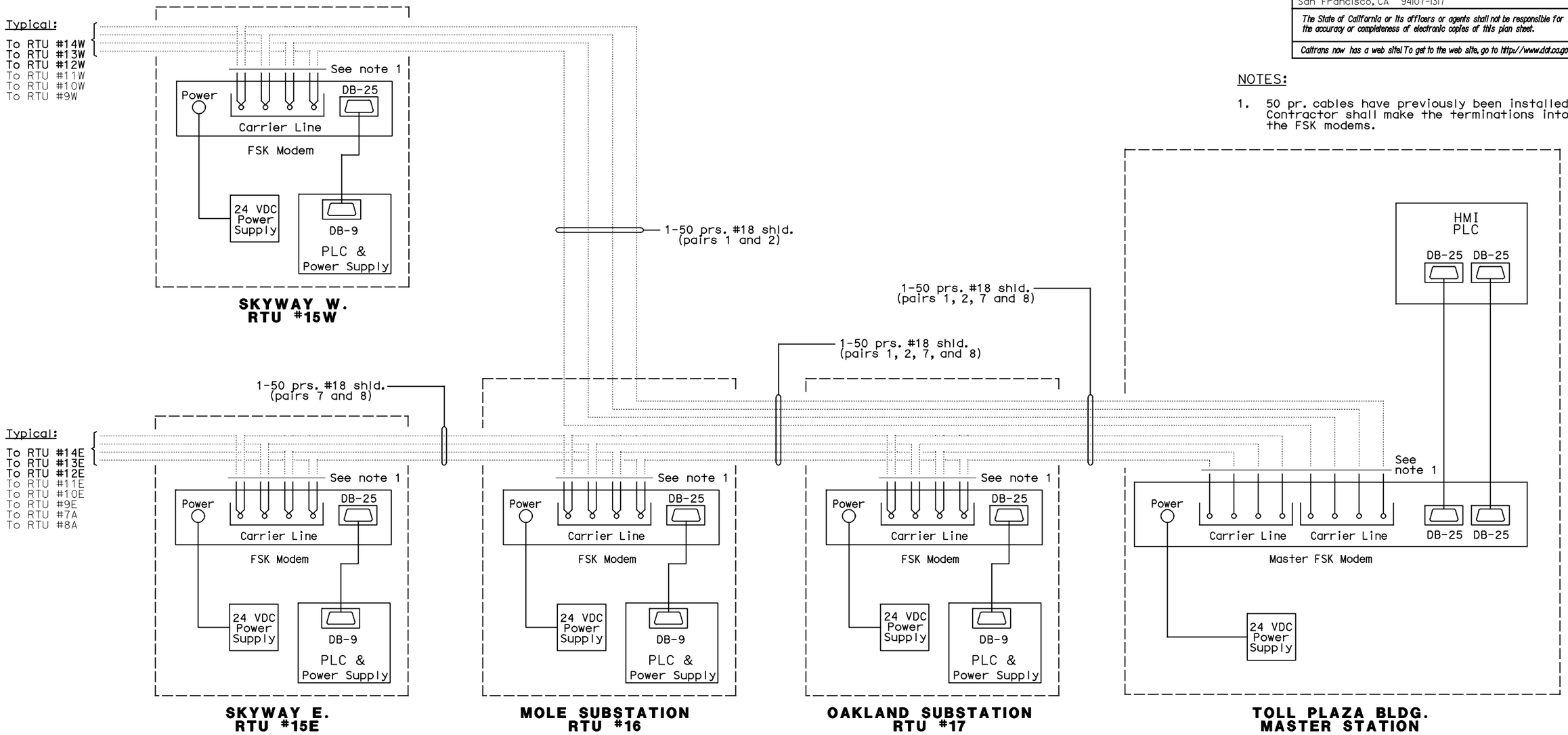

REQUEST FOR INFORMATION NOT ADDRESSED IN THIS CCO REMAIN IN FORCE

MARK	DATE	DESCRIPTIONS	BY	CH'D	CCO#
		REVISIONS			
0	03/08/10	MEP INTEGRATION	JE	FW	110

CONTRACT CHANGE ORDER NO._____
SHEET _____ OF _____

DETAILS
SCADA REMOTE TERMINAL UNIT SYSTEM
RTU FSK MODEM WIRING DIAGRAM
NO SCALE

E-902

THIS PLAN ACCURATE FOR ELECTRICAL WORK ONLY.

STATE OF CALIFORNIA - DEPARTMENT OF TRANSPORTATION
Caltrans
DESIGN OVERSIGHT
BEHZAD GOLEMOHAMMADI

CALCULATED/ DESIGNED BY	SYC	DATE 01/10	REVISED BY
CHECKED BY	FW	01/10	DATE REVISED

LAST REVISION 00-00-00
DATE PLOTTED => 25-MAY-2010
TIME PLOTTED => 15:05

FOR REDUCED PLANS ORIGINAL SCALE IS IN MILLIMETERS 0 20 40 60 80

DGN FILE =>04-0120f1_E-902.dgn
USERNAME =>llorico

CU 04251

EA 0120F1

DIST	COUNTY	ROUTE	KILOMETER POST TOTAL PROJECT	SHEET No	TOTAL SHEETS
04	SF,Ala	80	12.2/14.3 0.0/4.0	407a 09S06	1204

Syn Yee Chin 03/08/10
REGISTERED ELECTRICAL ENGINEER DATE

05-06-2010
PLANS APPROVAL DATE

REGISTERED PROFESSIONAL ENGINEER
SYN YEE CHIN
No. 18186
Exp. 09/30/2011
ELECTRICAL
STATE OF CALIFORNIA

PB AMERICAS, Inc.
A Parsons Brinckerhoff Company
303 Second St., Suite 700N
San Francisco, CA 94107-1317

The State of California or its officers or agents shall not be responsible for the accuracy or completeness of electronic copies of this plan sheet.

Caltrans now has a web site! To get to the web site, go to http://www.dot.ca.gov

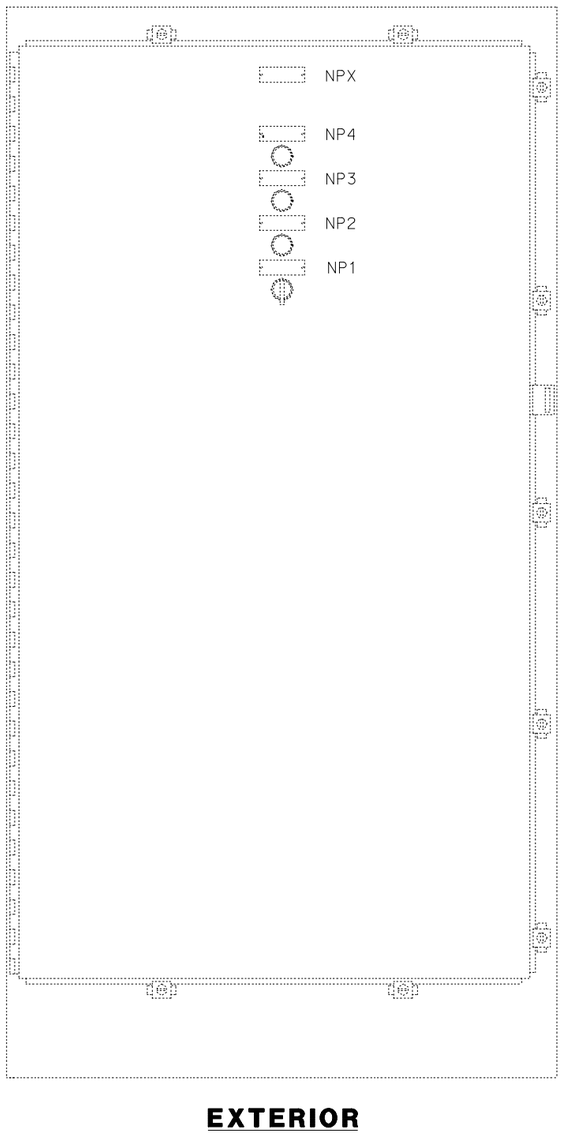

EXTERIOR

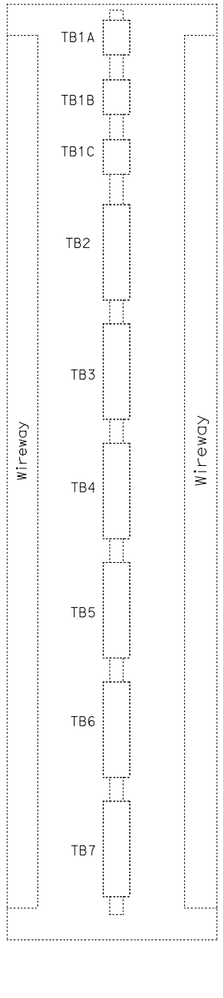

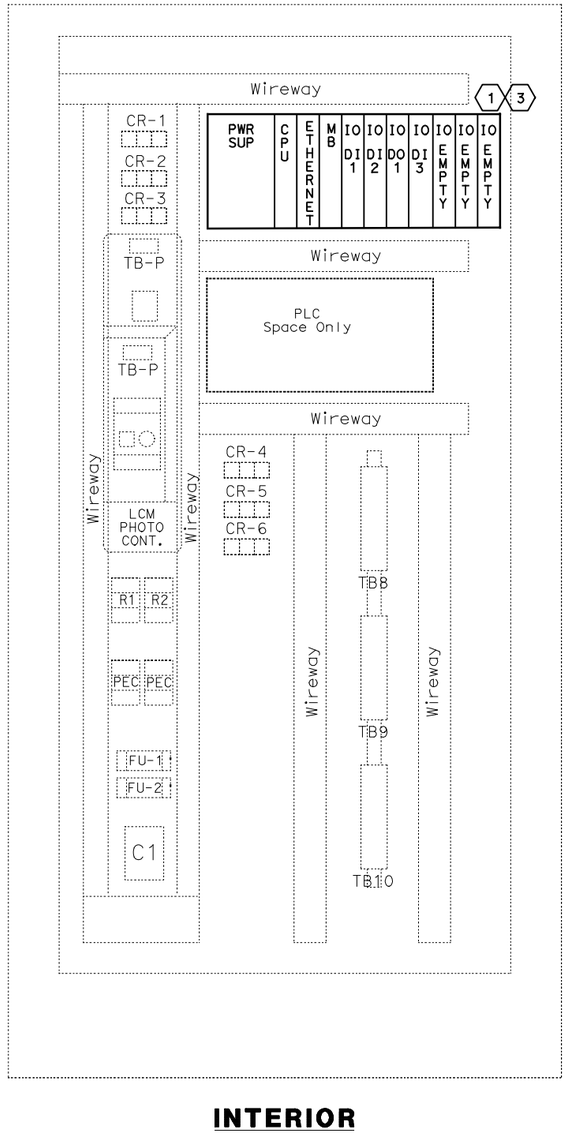

INTERIOR

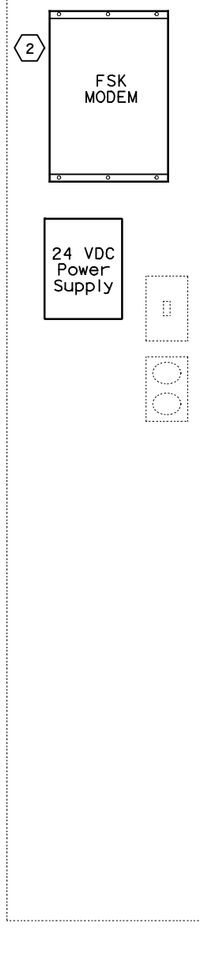

NOTES:

1. Refer to the special provisions for the PLC and FSK Modem requirements.
2. For RTU wiring refer to the following sheets:
   - RTU #12W - Sheets E-904, 905, 906
   - RTU #12E - Sheets E-907, 908, 909.

SHEET NOTES:

(1) Contractor shall furnish and install a new GE Fanuc PAC Systems RX3i PLC in the existing RTU.

(2) Contractor shall furnish and install a new Frequency Shift Key (FSK) modem and 120v (AC) to 21v-28v (DC) power supply in the existing RTU.

(3) Contractor shall install the input and output cards.

REQUEST FOR INFORMATION NOT ADDRESSED IN THIS CCO REMAIN IN FORCE

MARK	DATE	REVISIONS DESCRIPTIONS	BY	CH'D	CCO#
0	03/08/10	MEP INTEGRATION	JE	FW	110

CONTRACT CHANGE ORDER NO._____
SHEET _____ OF _____

DETAILS
SCADA REMOTE TERMINAL UNIT SYSTEM
RTU #12W AND #12E ASSEMBLY

NO SCALE

E-903

STATE OF CALIFORNIA - DEPARTMENT OF TRANSPORTATION
Caltrans
DESIGN OVERSIGHT
BEHZAD GOLEMOHAMMADI
CALCULATED/ DESIGNED BY
CHECKED BY
SYC FW
DATE 01/10 01/10
REVISED BY
DATE REVISED

THIS PLAN ACCURATE FOR ELECTRICAL WORK ONLY.

FOR REDUCED PLANS ORIGINAL SCALE IS IN MILLIMETERS 0 20 40 60 80

DGN FILE =>04-0120f1_E-903.dgn
USERNAME =>llorico

CU 04251 EA 0120F1

LAST REVISION 00-00-00
DATE PLOTTED => 25-MAY-2010
TIME PLOTTED => 15:06

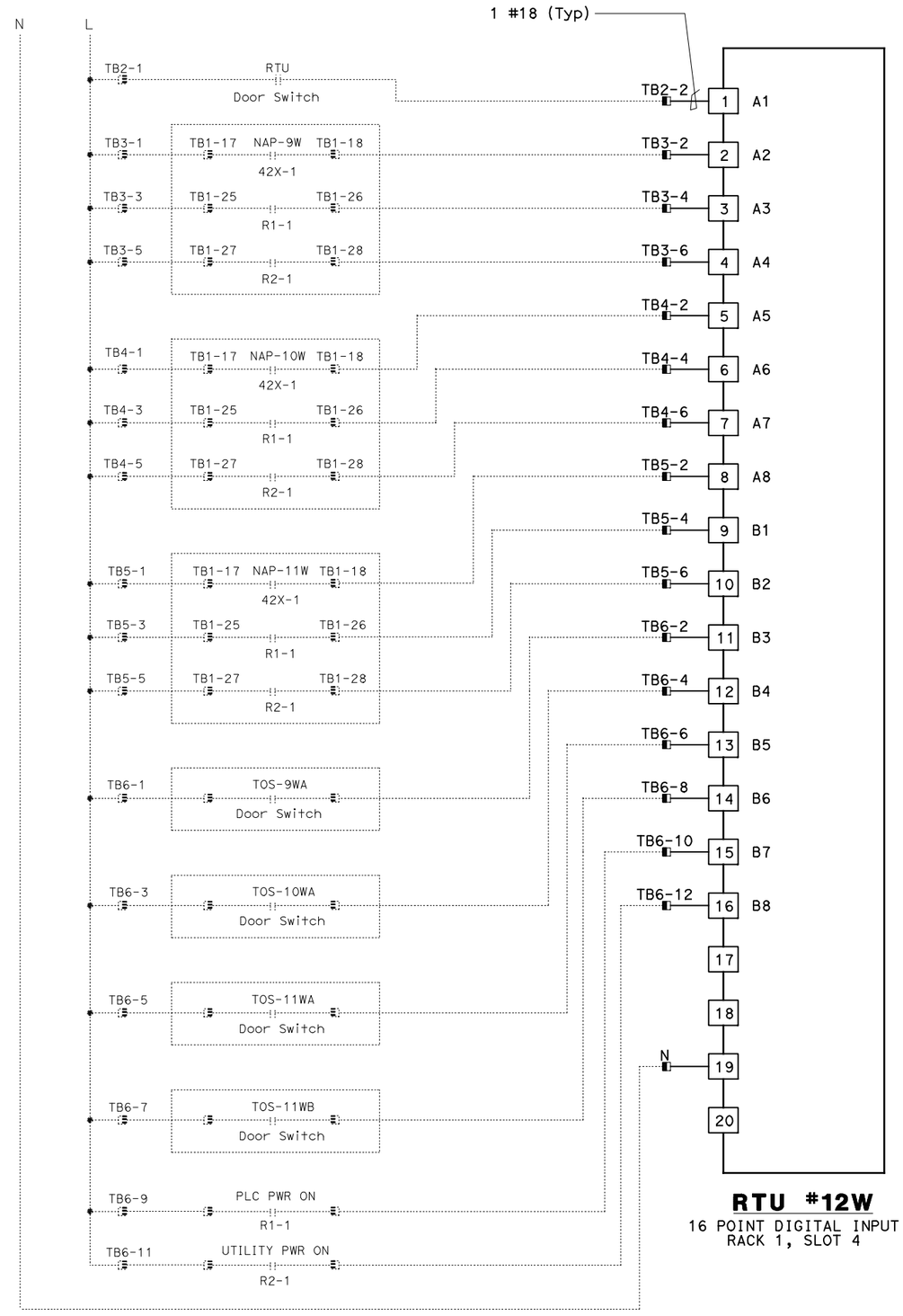

RTU #12W
16 POINT DIGITAL INPUT
RACK 1, SLOT 4

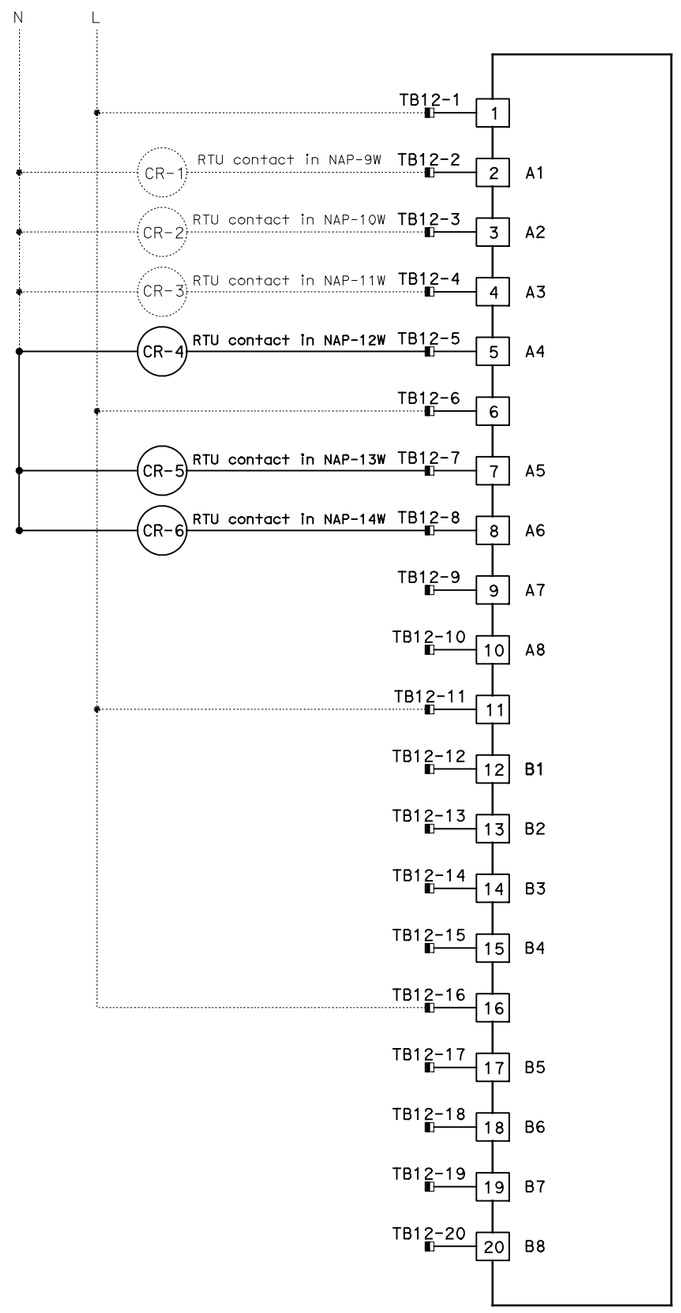

RTU #12W
16 POINT DIGITAL OUTPUT
RACK 1, SLOT 6

Caltrans Metric

DIST	COUNTY	ROUTE	KILOMETER POST TOTAL PROJECT	SHEET No	TOTAL SHEETS
04	SF,Ala	80	12.2/14.3 0.0/4.0	407a 09S07	1204

Syn Yee Chin 03/08/10
REGISTERED ELECTRICAL ENGINEER DATE

REGISTERED PROFESSIONAL ENGINEER
SYN YEE CHIN
No. 18186
Exp. 09/30/2011
ELECTRICAL
STATE OF CALIFORNIA

05-06-2010
PLANS APPROVAL DATE

PB AMERICAS, Inc.
A Parsons Brinckerhoff Company
303 Second St., Suite 700N
San Francisco, CA 94107-1317

The State of California or its officers or agents shall not be responsible for the accuracy or completeness of electronic copies of this plan sheet.

Caltrans now has a web site! To get to the web site, go to http://www.dot.ca.gov

NOTES:

1. Contractor shall install input and output cards. See sheet E-903 for location.
2. For FSK Modems interconnect wiring, see sheet E-902.
3. Contractor shall wire connection shown by bold lines.

REQUEST FOR INFORMATION NOT ADDRESSED IN THIS CCO REMAIN IN FORCE

MARK	DATE	DESCRIPTIONS	BY	CH'D	CCO#
		REVISIONS			
0	03/08/10	MEP INTEGRATION	JE	FW	110

CONTRACT CHANGE ORDER NO._____
SHEET _____ OF _____

DETAILS
SCADA REMOTE TERMINAL UNIT SYSTEM
RTU #12W WIRING DIAGRAM
NO SCALE

E-904

DESIGN OVERSIGHT
BEHZAD GOLEMOHAMMADI

STATE OF CALIFORNIA - DEPARTMENT OF TRANSPORTATION
Caltrans

CALCULATED/ DESIGNED BY	SYC	DATE 01/10	REVISED BY	DATE REVISED
CHECKED BY	FW	01/10		

THIS PLAN ACCURATE FOR ELECTRICAL WORK ONLY.

FOR REDUCED PLANS ORIGINAL SCALE IS IN MILLIMETERS 0 20 40 60 80

DGN FILE =>04-0120f1_E-904.dgn
USERNAME =>llorico

CU 04251

EA 0120F1

LAST REVISION 00-00-00
DATE PLOTTED => 25-MAY-2010
TIME PLOTTED => 15:07

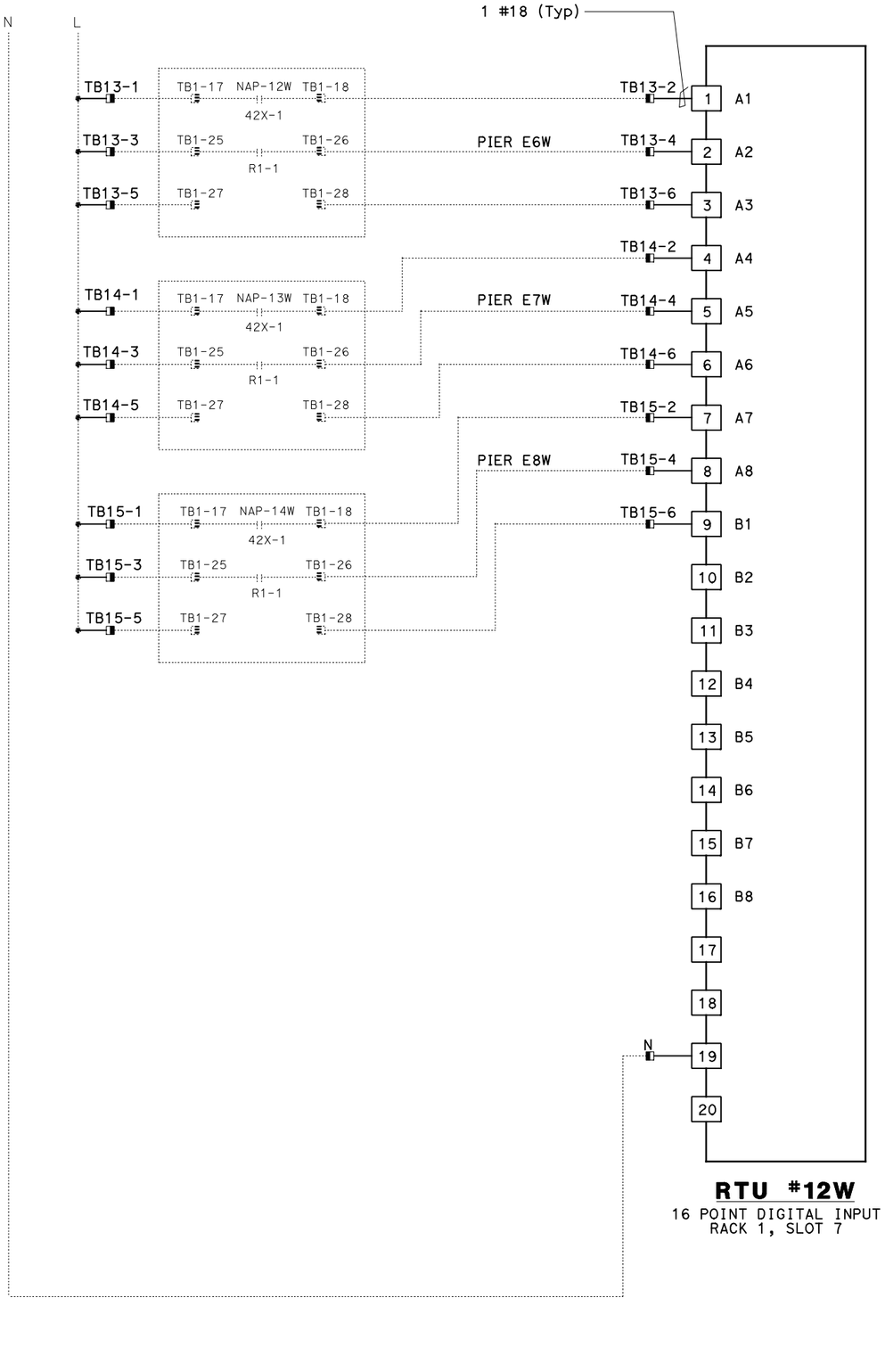

RTU #12W

16 POINT DIGITAL INPUT
RACK 1, SLOT 7

DIST	COUNTY	ROUTE	KILOMETER POST TOTAL PROJECT	SHEET No	TOTAL SHEETS
04	SF,Ala	80	12.2/14.3 0.0/4.0	407a 09S08	1204

Caltrans Metric

Syn Yee Chin 03/08/10
REGISTERED ELECTRICAL ENGINEER DATE

05-06-2010
PLANS APPROVAL DATE

REGISTERED PROFESSIONAL ENGINEER SYN YEE CHIN No. 18186 Exp. 09/30/2011 ELECTRICAL STATE OF CALIFORNIA

PB AMERICAS, Inc.
A Parsons Brinckerhoff Company
303 Second St., Suite 700N
San Francisco, CA 94107-1317

The State of California or its officers or agents shall not be responsible for the accuracy or completeness of electronic copies of this plan sheet.

Caltrans now has a web site! To get to the web site, go to http://www.dot.ca.gov

NOTES:

1. Contractor shall install input card. See sheet E-903 for location.
2. For FSK Modems interconnect wiring, see sheet E-902.
3. Contractor shall wire connection shown by bold lines.

REQUEST FOR INFORMATION NOT ADDRESSED IN THIS CCO REMAIN IN FORCE

MARK	DATE	DESCRIPTIONS	BY	CH'D	CCO#
0	03/08/10	MEP INTEGRATION	JE	FW	110

REVISIONS

CONTRACT CHANGE ORDER NO._____
SHEET _____ OF _____

DETAILS
SCADA REMOTE TERMINAL UNIT SYSTEM
RTU #12W WIRING DIAGRAM

NO SCALE

E-904A

STATE OF CALIFORNIA - DEPARTMENT OF TRANSPORTATION
Caltrans

DESIGN OVERSIGHT: BEHZAD GOLEMOHAMMADI
CALCULATED/DESIGNED BY: SYC DATE 01/10
CHECKED BY: FW 01/10
REVISED BY
DATE REVISED

THIS PLAN ACCURATE FOR ELECTRICAL WORK ONLY.

FOR REDUCED PLANS ORIGINAL SCALE IS IN MILLIMETERS 0 20 40 60 80

DGN FILE =>04-0120f1_E-904A.dgn
USERNAME =>llorico

CU 04251 EA 0120F1

LAST REVISION 00-00-00
DATE PLOTTED => 25-MAY-2010
TIME PLOTTED => 15:07

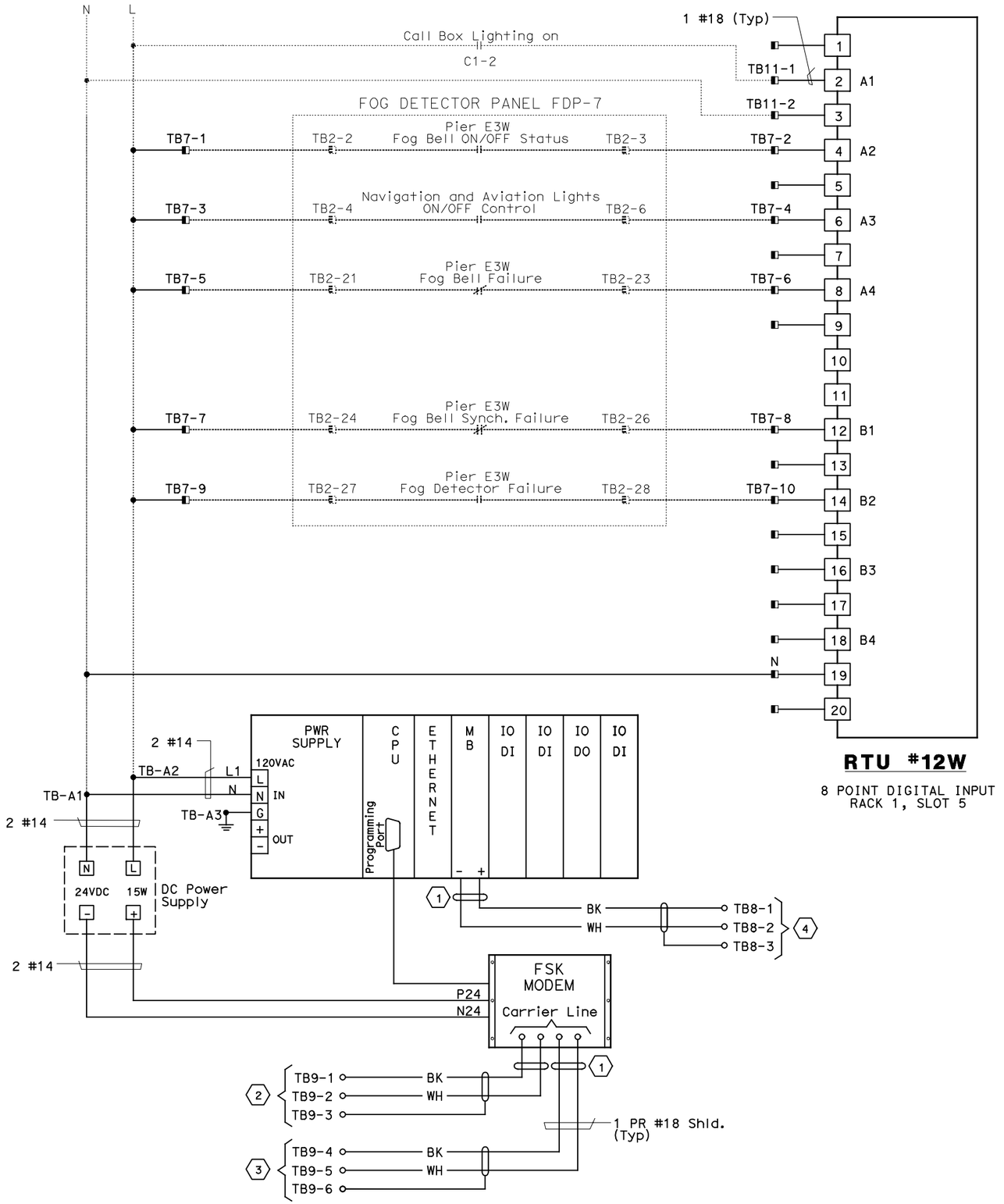

RTU #12W

8 POINT DIGITAL INPUT
RACK 1, SLOT 5

DIST	COUNTY	ROUTE	KILOMETER POST TOTAL PROJECT	SHEET No	TOTAL SHEETS
04	SF,Ala	80	12.2/14.3 0.0/4.0	407a 09S09	1204

Synyee Chin 03/08/10
REGISTERED ELECTRICAL ENGINEER DATE

05-06-2010
PLANS APPROVAL DATE

REGISTERED PROFESSIONAL ENGINEER
SYN YEE CHIN
No. 18186
Exp. 09/30/2011
ELECTRICAL
STATE OF CALIFORNIA

PB AMERICAS, Inc.
A Parsons Brinckerhoff Company
303 Second St., Suite 700N
San Francisco, CA 94107-1317

The State of California or its officers or agents shall not be responsible for the accuracy or completeness of electronic copies of this plan sheet.

Caltrans now has a web site! To get to the web site, go to http://www.dot.ca.gov

NOTES:

1. Contractor shall install input card. Refer to E-903 for location.
2. For FSK modems interconnect wiring, see sheet E-902.
3. Contractor shall wire connection shown by bold lines.

SHEET NOTES:

1. Contractor to tape shield. This circuit is not to be grounded at this end.
2. Pair 1 of 50 pair SCADA cable.
3. Pair 2 of 50 pair SCADA cable.
4. To Call Box Communications cable RS-485.

REQUEST FOR INFORMATION NOT ADDRESSED IN THIS CCO REMAIN IN FORCE					
0	03/08/10	MEP INTEGRATION	JE	FW	110
MARK	DATE	DESCRIPTIONS	BY	CH'D	CCO#
REVISIONS					

CONTRACT CHANGE ORDER NO._____
SHEET_____ OF _____

DETAILS
SCADA REMOTE TERMINAL UNIT SYSTEM
RTU #12W WIRING DIAGRAM
NO SCALE

E-905

THIS PLAN ACCURATE FOR ELECTRICAL WORK ONLY.

CALCULATED/ DESIGNED BY	SYC	DATE 01/10	REVISED BY
CHECKED BY	FW	01/10	DATE REVISED

DESIGN OVERSIGHT
BEHZAD GOLEMOHAMMADI

STATE OF CALIFORNIA - DEPARTMENT OF TRANSPORTATION
Caltrans

LAST REVISION 00-00-00
DATE PLOTTED => 25-MAY-2010
TIME PLOTTED => 15:08

FOR REDUCED PLANS ORIGINAL SCALE IS IN MILLIMETERS 0 20 40 60 80

DGN FILE =>04-0120f1_E-905.dgn
USERNAME =>llorico

CU 04251

EA 0120F1

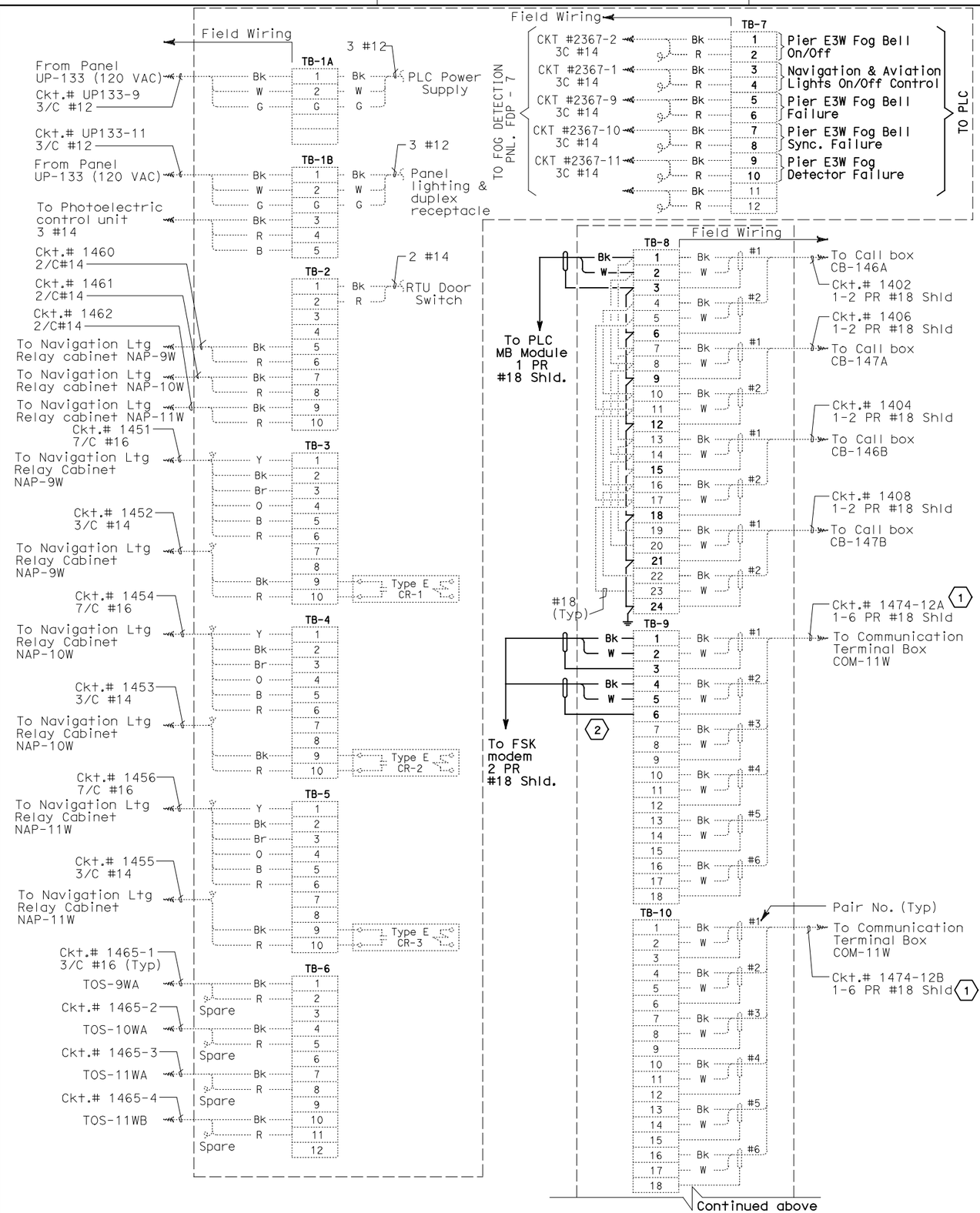

DIST	COUNTY	ROUTE	KILOMETER POST TOTAL PROJECT	SHEET No	TOTAL SHEETS
04	SF,Ala	80	12.2/14.3 0.0/4.0	407a 09S10	1204

Syn Yee Chin 03/08/10
REGISTERED ELECTRICAL ENGINEER DATE

SYN YEE CHIN No. 18186 Exp. 09/30/2011 ELECTRICAL — REGISTERED PROFESSIONAL ENGINEER — STATE OF CALIFORNIA

05-06-2010
PLANS APPROVAL DATE

PB AMERICAS, Inc.
A Parsons Brinckerhoff Company
303 Second St., Suite 700N
San Francisco, CA 94107-1317

The State of California or its officers or agents shall not be responsible for the accuracy or completeness of electronic copies of this plan sheet.

Caltrans now has a web site! To get to the web site, go to http://www.dot.ca.gov

NOTES:

1. This plan sheet is a record drawing of the Skyway Structures Remote Terminal Unit No. 12W. The Contractor shall verify the existing installation. See sheet EE-349 from the Skyway Structures, contract No. 04-012024.
2. References: Refer to Sheet E-905.
3. Contractor shall wire connection shown by bold lines.

SHEET NOTES:

(1) Verify that the shield is not grounded.

(2) Do not ground shield.

REQUEST FOR INFORMATION NOT ADDRESSED IN THIS CCO REMAIN IN FORCE

MARK	DATE	DESCRIPTIONS / REVISIONS	BY	CH'D	CCO#
0	03/08/10	MEP INTEGRATION	JE	FW	110

CONTRACT CHANGE ORDER NO._____
SHEET _____ OF _____

DETAILS
SCADA REMOTE TERMINAL UNIT SYSTEM
RTU #12W CONNECTION DIAGRAM
NO SCALE

E-906

REVISED BY	DATE REVISED
SYC	01/10
FW	01/10

CALCULATED/DESIGNED BY
CHECKED BY

DESIGN OVERSIGHT
BEHZAD GOLEMOHAMMADI

STATE OF CALIFORNIA - DEPARTMENT OF TRANSPORTATION
Caltrans

LAST REVISION 00-00-00
DATE PLOTTED => 06-MAY-2010
TIME PLOTTED => 19:06

THIS PLAN ACCURATE FOR ELECTRICAL WORK ONLY.

FOR REDUCED PLANS ORIGINAL SCALE IS IN MILLIMETERS 0 20 40 60 80

DGN FILE =>04-0120f1_E-906.dgn
USERNAME =>llorico

CU 04251

EA 0120F1

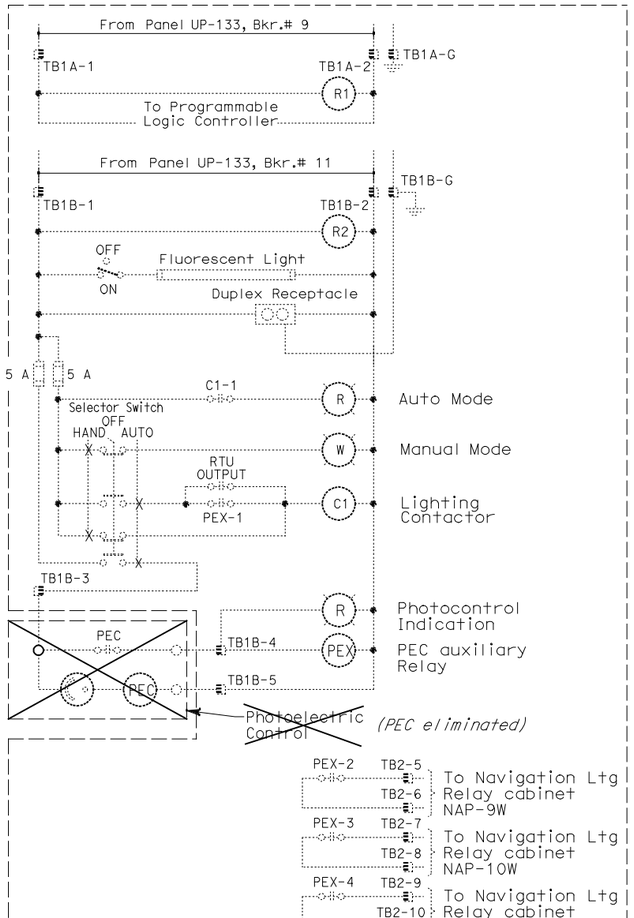

Caltrans Metric

DIST	COUNTY	ROUTE	KILOMETER POST TOTAL PROJECT	SHEET No	TOTAL SHEETS
04	SF, Ala	80	12.2/14.3 0.0/4.0	407a 09S11	1204

Syn Yee Chin 03/08/10
REGISTERED ELECTRICAL ENGINEER DATE

REGISTERED PROFESSIONAL ENGINEER
SYN YEE CHIN
No. 18186
Exp. 09/30/2011
ELECTRICAL
STATE OF CALIFORNIA

05-06-2010
PLANS APPROVAL DATE

PB AMERICAS, Inc.
A Parsons Brinckerhoff Company
303 Second St., Suite 700N
San Francisco, CA 94107-1317

The State of California or its officers or agents shall not be responsible for the accuracy or completeness of electronic copies of this plan sheet.

Caltrans now has a web site! To get to the web site, go to http://www.dot.ca.gov

NOTES:

1. This plan sheet is a record drawing of the Skyway Structures Remote Terminal Unit No. 12W. The Contractor shall verify the existing installation. See sheet EE-349 from the Skyway Structures, contract No. 04-012024.
2. References:
   Refer to Sheet E-905.

REQUEST FOR INFORMATION NOT ADDRESSED IN THIS CCO REMAIN IN FORCE

MARK	DATE	DESCRIPTIONS	BY	CH'D	CCO#
		REVISIONS			
0	03/08/10	MEP INTEGRATION	JE	FW	110

CONTRACT CHANGE ORDER NO._____
SHEET_____ OF _____

DETAILS
SCADA REMOTE TERMINAL UNIT SYSTEM
RTU #12W ELEMENTARY DIAGRAM
NO SCALE

E-906A

STATE OF CALIFORNIA - DEPARTMENT OF TRANSPORTATION
Caltrans

DESIGN OVERSIGHT
BEHZAD GOLEMOHAMMADI

CALCULATED/ DESIGNED BY	SYC	DATE 01/10	REVISED BY
CHECKED BY	FW	01/10	DATE REVISED

THIS PLAN ACCURATE FOR ELECTRICAL WORK ONLY.

FOR REDUCED PLANS ORIGINAL SCALE IS IN MILLIMETERS 0 20 40 60 80

DGN FILE =>04-0120f1_E-906A.dgn
USERNAME =>llorico

CU 04251

EA 0120F1

LAST REVISION 00-00-00
DATE PLOTTED => 06-MAY-2010
TIME PLOTTED => 19:06

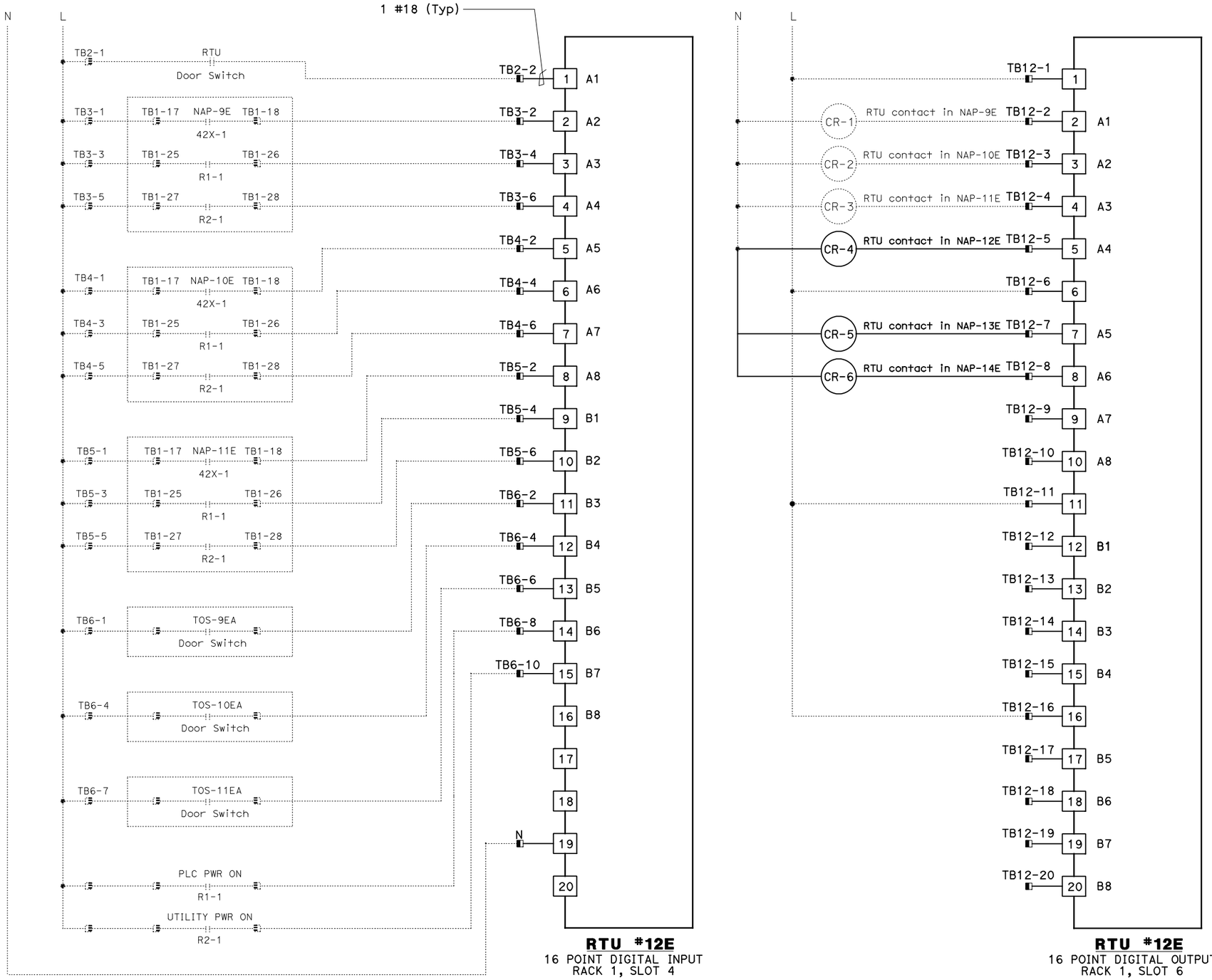

DIST	COUNTY	ROUTE	KILOMETER POST TOTAL PROJECT	SHEET No	TOTAL SHEETS
04	SF,Ala	80	12.2/14.3 0.0/4.0	407a 09S12	1204

Caltrans Metric

Syn Yee Chin 03/08/10
REGISTERED ELECTRICAL ENGINEER DATE

05-06-2010
PLANS APPROVAL DATE

REGISTERED PROFESSIONAL ENGINEER SYN YEE CHIN No. 18186 Exp. 09/30/2011 ELECTRICAL STATE OF CALIFORNIA

PB AMERICAS, Inc.
A Parsons Brinckerhoff Company
303 Second St., Suite 700N
San Francisco, CA 94107-1317

The State of California or its officers or agents shall not be responsible for the accuracy or completeness of electronic copies of this plan sheet.

Caltrans now has a web site! To get to the web site, go to http://www.dot.ca.gov

NOTES:

1. Contractor shall install input and output cards. See sheet E-903 for location.
2. For FSK modems interconnect wiring, see sheet E-902.
3. Contractor shall wire connection shown by bold lines.

REQUEST FOR INFORMATION NOT ADDRESSED IN THIS CCO REMAIN IN FORCE

MARK	DATE	DESCRIPTIONS	BY	CH'D	CCO#
0	03/08/10	MEP INTEGRATION	JE	FW	110

REVISIONS

CONTRACT CHANGE ORDER NO._____
SHEET _____ OF _____

DETAILS
SCADA REMOTE TERMINAL UNIT SYSTEM
RTU #12E WIRING DIAGRAM
NO SCALE

E-907

STATE OF CALIFORNIA - DEPARTMENT OF TRANSPORTATION
Caltrans

DESIGN OVERSIGHT: BEHZAD GOLEMOHAMMADI
CALCULATED/DESIGNED BY: SYC DATE 01/10
CHECKED BY: FW 01/10
REVISED BY
DATE REVISED

THIS PLAN ACCURATE FOR ELECTRICAL WORK ONLY.

FOR REDUCED PLANS ORIGINAL SCALE IS IN MILLIMETERS 0 20 40 60 80

DGN FILE =>04-0120f1_E-907.dgn
USERNAME =>llorico

CU 04251 EA 0120F1

LAST REVISION 00-00-00
DATE PLOTTED => 06-MAY-2010
TIME PLOTTED => 19:06

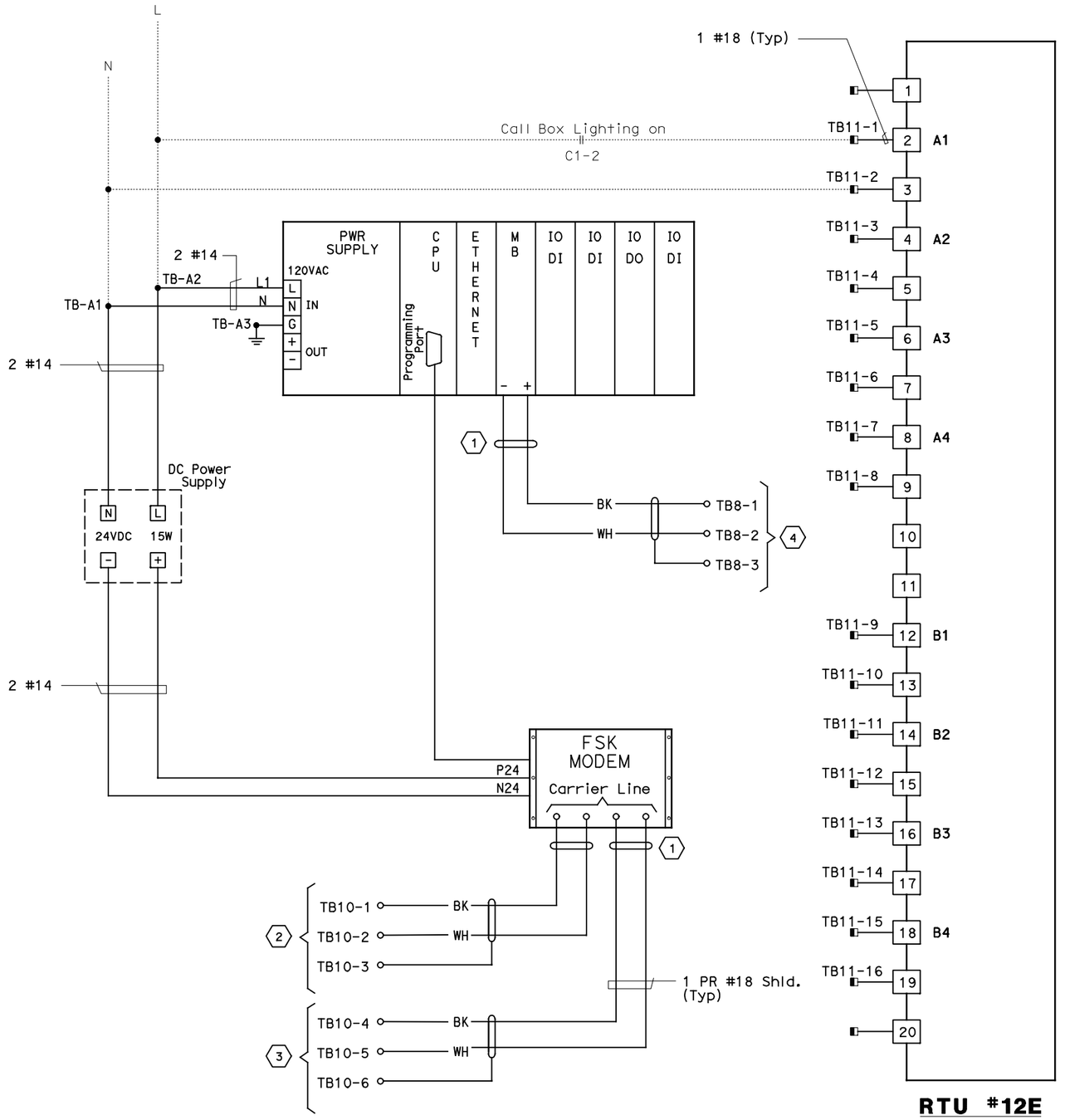

RTU #12E

8 POINT DIGITAL INPUT
RACK 1, SLOT 5

DIST	COUNTY	ROUTE	KILOMETER POST TOTAL PROJECT	SHEET No	TOTAL SHEETS
04	SF, Ala	80	12.2/14.3 0.0/4.0	407a 09S13	1204

Syn Yee Chin 03/08/10
REGISTERED ELECTRICAL ENGINEER DATE

REGISTERED PROFESSIONAL ENGINEER
SYN YEE CHIN
No. 18186
Exp. 09/30/2011
ELECTRICAL
STATE OF CALIFORNIA

05-06-2010
PLANS APPROVAL DATE

PB AMERICAS, Inc.
A Parsons Brinckerhoff Company
303 Second St., Suite 700N
San Francisco, CA 94107-1317

The State of California or its officers or agents shall not be responsible for the accuracy or completeness of electronic copies of this plan sheet.

Caltrans now has a web site! To get to the web site, go to http://www.dot.ca.gov

SHEET NOTES:

1. Contractor shall install input card. See sheet E-903 for location.
2. For FSK Modems interconnect wiring, see sheet E-902.
3. Contractor shall wire connection shown by bold lines.

SHEET NOTES:

1. Contractor to tape shield. This circuit is not to be grounded at this end.
2. Pair 7 of 50 pair SCADA cable.
3. Pair 8 of 50 pair SCADA cable.
4. To Call Box Communications cable RS-485.

REQUEST FOR INFORMATION NOT ADDRESSED IN THIS CCO REMAIN IN FORCE

MARK	DATE	DESCRIPTIONS	BY	CH'D	CCO#
		REVISIONS			
0	03/08/10	MEP INTEGRATION	JE	FW	110

CONTRACT CHANGE ORDER NO._____
SHEET _____ OF _____

DETAILS
SCADA REMOTE TERMINAL UNIT SYSTEM
RTU #12E WIRING DIAGRAM
NO SCALE

E-908

STATE OF CALIFORNIA - DEPARTMENT OF TRANSPORTATION
Caltrans
DESIGN OVERSIGHT
BEHZAD GOLEMOHAMMADI
CALCULATED/ DESIGNED BY
CHECKED BY
SYC FW
DATE 01/10 01/10
REVISED BY DATE REVISED

THIS PLAN ACCURATE FOR ELECTRICAL WORK ONLY.

FOR REDUCED PLANS ORIGINAL SCALE IS IN MILLIMETERS 0 20 40 60 80

DGN FILE =>04-0120f1_E-908.dgn
USERNAME =>llorico

CU 04251 EA 0120F1

LAST REVISION 00-00-00
DATE PLOTTED => 06-MAY-2010
TIME PLOTTED => 19:06

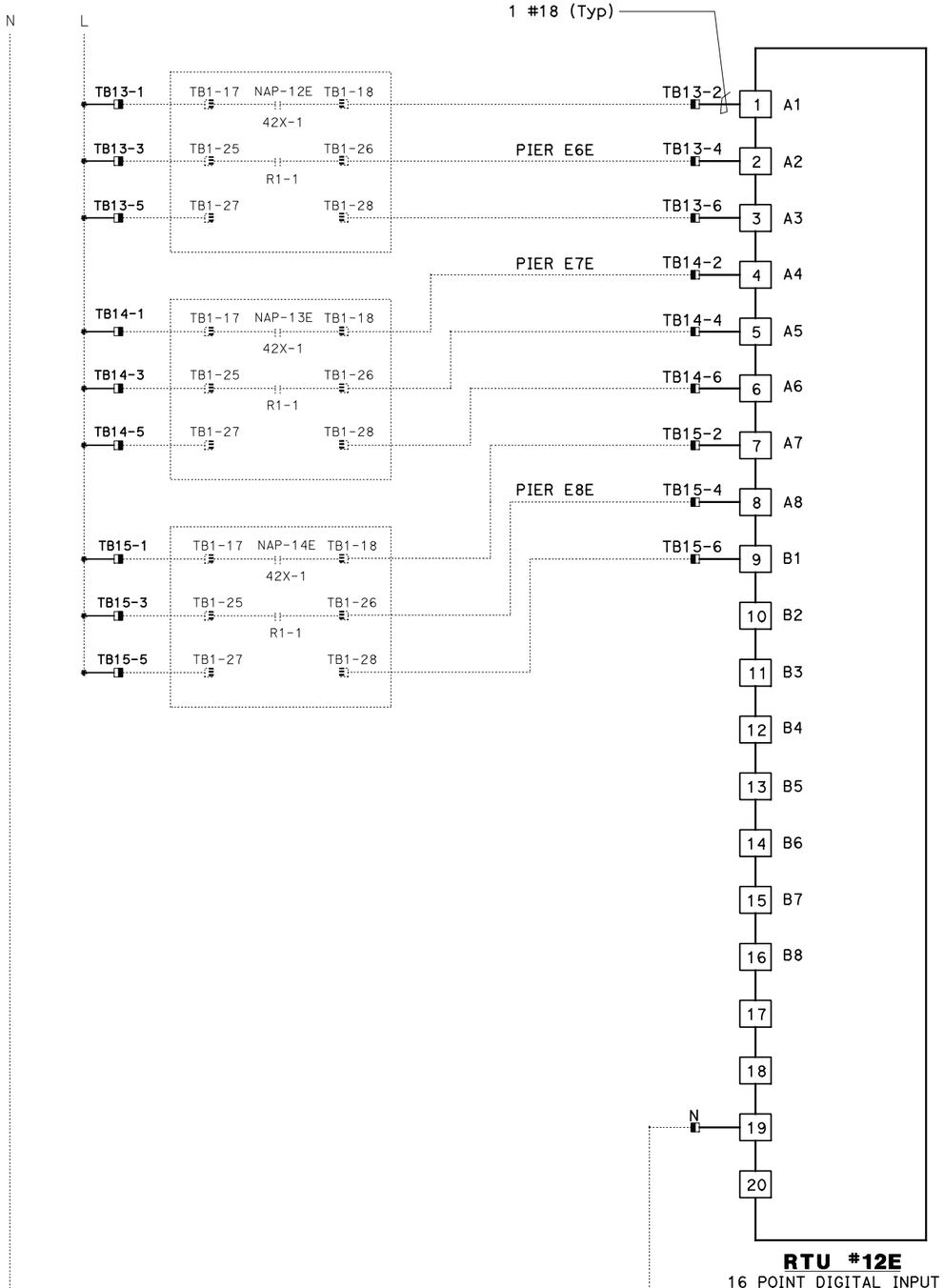

RTU #12E
16 POINT DIGITAL INPUT
RACK 1, SLOT 7

DIST	COUNTY	ROUTE	KILOMETER POST TOTAL PROJECT	SHEET No	TOTAL SHEETS
04	SF, Ala	80	12.2/14.3 0.0/4.0	407a 09S14	1204

Syn Yee Chin 03/08/10
REGISTERED ELECTRICAL ENGINEER DATE

05-06-2010
PLANS APPROVAL DATE

REGISTERED PROFESSIONAL ENGINEER
SYN YEE CHIN
No. 18186
Exp. 09/30/2011
ELECTRICAL
STATE OF CALIFORNIA

PB AMERICAS, Inc.
A Parsons Brinckerhoff Company
303 Second St., Suite 700N
San Francisco, CA 94107-1317

The State of California or its officers or agents shall not be responsible for the accuracy or completeness of electronic copies of this plan sheet.

Caltrans now has a web site! To get to the web site, go to http://www.dot.ca.gov

NOTES:

1. Contractor shall install input card. See sheet E-903 for location.
2. For FSK modems interconnect wiring, see sheet E-902.
3. Contractor shall wire connection shown by bold lines.

REQUEST FOR INFORMATION NOT ADDRESSED IN THIS CCO REMAIN IN FORCE

MARK	DATE	REVISIONS	BY	CH'D	CCO#
0	03/08/10	MEP INTEGRATION	JE	FW	110

CONTRACT CHANGE ORDER NO._____
SHEET _____ OF _____

DETAILS
SCADA REMOTE TERMINAL UNIT SYSTEM
RTU #12E WIRING DIAGRAM
NO SCALE

E-908A

REVISED BY	DATE REVISED
SYC	01/10
FW	01/10

CALCULATED/DESIGNED BY
CHECKED BY

DESIGN OVERSIGHT
BEHZAD GOLEMOHAMMADI

STATE OF CALIFORNIA - DEPARTMENT OF TRANSPORTATION
Caltrans

THIS PLAN ACCURATE FOR ELECTRICAL WORK ONLY.

LAST REVISION 00-00-00
DATE PLOTTED => 06-MAY-2010
TIME PLOTTED => 19:06

FOR REDUCED PLANS ORIGINAL SCALE IS IN MILLIMETERS 0 20 40 60 80

DGN FILE =>04-0120f1_E-908A.dgn
USERNAME =>llorico

CU 04251

EA 0120F1

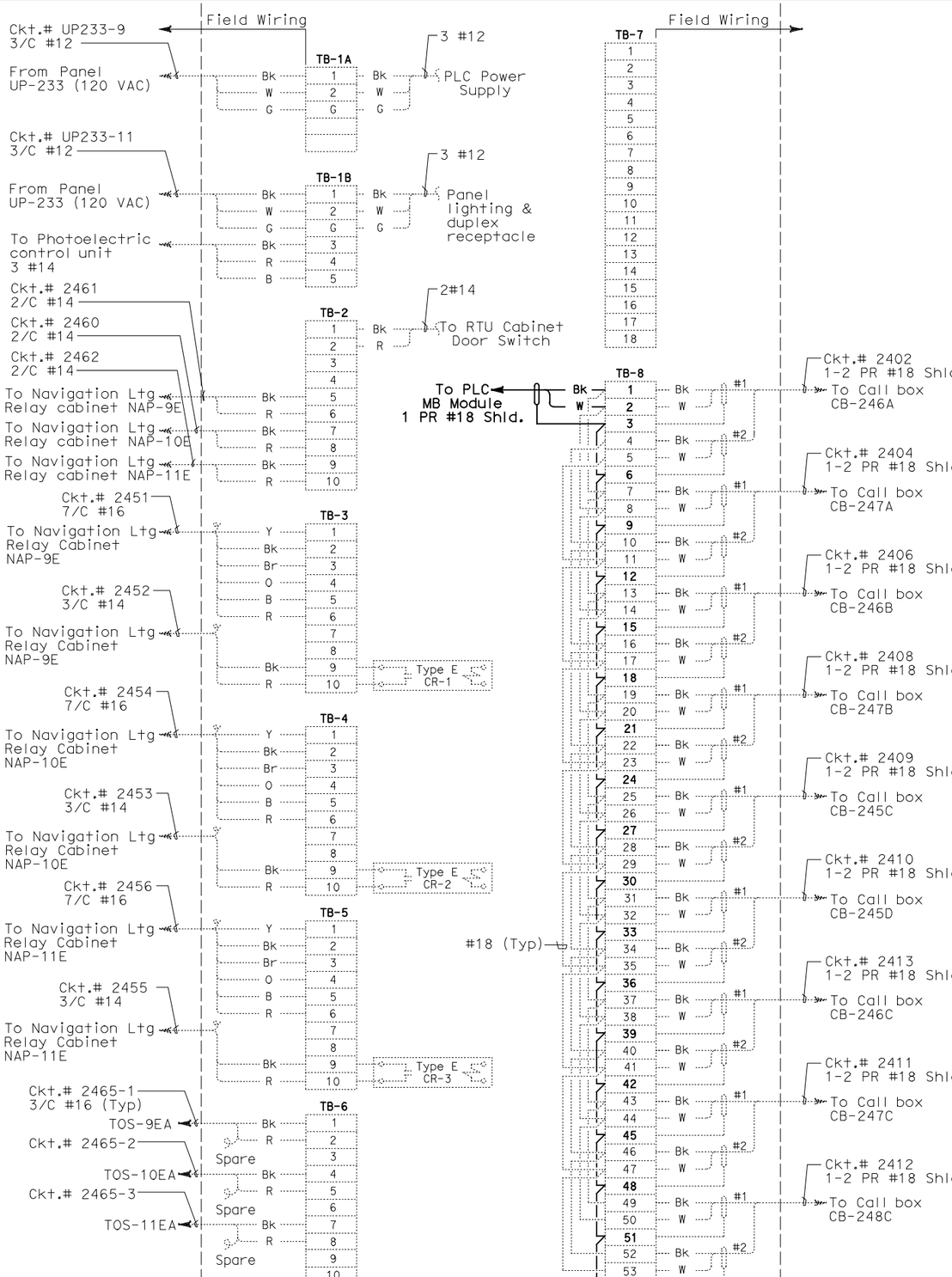

NOTES:

1. This plan sheet is a record drawing of the Skyway Structures Remote Terminal Unit No. 12E. The Contractor shall verify the existing installation. See sheet EE-356 from the Skyway Structures, contract No. 04-012024.
2. References: Refer to Sheet E-908.
3. Contractor shall wire connection shown by bold lines.

SHEET NOTES:

(1) Verify that the shield is not grounded.

(2) Do not ground shield.

DIST	COUNTY	ROUTE	KILOMETER POST TOTAL PROJECT	SHEET No	TOTAL SHEETS
04	SF,Ala	80	12.2/14.3 0.0/4.0	407a 09S15	1204

Syn Yee Chin 03/08/10
REGISTERED ELECTRICAL ENGINEER DATE

05-06-2010
PLANS APPROVAL DATE

REGISTERED PROFESSIONAL ENGINEER — SYN YEE CHIN No. 18186 Exp. 09/30/2011 ELECTRICAL — STATE OF CALIFORNIA

PB AMERICAS, Inc.
A Parsons Brinckerhoff Company
303 Second St., Suite 700N
San Francisco, CA 94107-1317

The State of California or its officers or agents shall not be responsible for the accuracy or completeness of electronic copies of this plan sheet.

Caltrans now has a web site! To get to the web site, go to http://www.dot.ca.gov

REQUEST FOR INFORMATION NOT ADDRESSED IN THIS CCO REMAIN IN FORCE

MARK	DATE	REVISIONS	BY	CH'D	CCO#
0	03/08/10	MEP INTEGRATION	JE	FW	110

CONTRACT CHANGE ORDER NO._____
SHEET_____ OF _____

DATE	BY	DATE REVISED	BY
01/10	SYC	01/10	FW

CALCULATED/DESIGNED BY
CHECKED BY

DESIGN OVERSIGHT
BEHZAD GOLEMOHAMMADI

STATE OF CALIFORNIA - DEPARTMENT OF TRANSPORTATION
Caltrans

DETAILS
SCADA REMOTE TERMINAL UNIT SYSTEM
RTU #12E CONNECTION DIAGRAM
NO SCALE

E-909

LAST REVISION 00-00-00
DATE PLOTTED => 06-MAY-2010
TIME PLOTTED => 19:06

THIS PLAN ACCURATE FOR ELECTRICAL WORK ONLY.

FOR REDUCED PLANS ORIGINAL SCALE IS IN MILLIMETERS 0 20 40 60 80

DGN FILE =>04-0120f1_E-909.dgn
USERNAME =>llorico

CU 04251

EA 0120F1

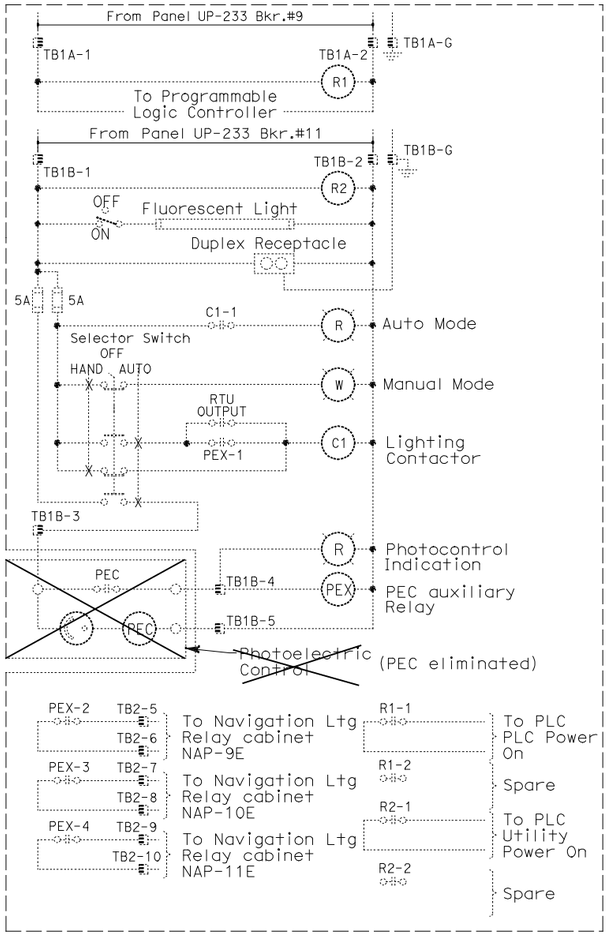

DIST	COUNTY	ROUTE	KILOMETER POST TOTAL PROJECT	SHEET No	TOTAL SHEETS
04	SF,Ala	80	12.2/14.3 0.0/4.0	407a 09S16	1204

Syn Yee Chin 03/08/10
REGISTERED ELECTRICAL ENGINEER DATE

REGISTERED PROFESSIONAL ENGINEER
SYN YEE CHIN
No. 18186
Exp. 09/30/2011
ELECTRICAL
STATE OF CALIFORNIA

05-06-2010
PLANS APPROVAL DATE

PB AMERICAS, Inc.
A Parsons Brinckerhoff Company
303 Second St., Suite 700N
San Francisco, CA 94107-1317

The State of California or its officers or agents shall not be responsible for the accuracy or completeness of electronic copies of this plan sheet.

Caltrans now has a web site! To get to the web site, go to http://www.dot.ca.gov

NOTES:

1. This plan sheet is a record drawing of the Skyway Structures Remote Terminal Unit No. 12E. The Contractor shall verify the existing installation. See sheet EE-356 from the Skyway Structures, contract No. 04-012024.
2. References:
   Refer to Sheet E-908.

REQUEST FOR INFORMATION NOT ADDRESSED IN THIS CCO REMAIN IN FORCE

MARK	DATE	DESCRIPTIONS	BY	CH'D	CCO#
		REVISIONS			
0	03/08/10	MEP INTEGRATION	JE	FW	110

CONTRACT CHANGE ORDER NO._____
SHEET_____ OF _____

DETAILS
SCADA REMOTE TERMINAL UNIT SYSTEM
RTU #12E ELEMENTARY DIAGRAM
NO SCALE

E-909A

CALCULATED/ DESIGNED BY	SYC	DATE 01/10	REVISED BY
CHECKED BY	FW	01/10	DATE REVISED

DESIGN OVERSIGHT
BEHZAD GOLEMOHAMMADI

STATE OF CALIFORNIA - DEPARTMENT OF TRANSPORTATION
Caltrans

THIS PLAN ACCURATE FOR ELECTRICAL WORK ONLY.

LAST REVISION 00-00-00
DATE PLOTTED => 06-MAY-2010
TIME PLOTTED => 19:06

FOR REDUCED PLANS ORIGINAL SCALE IS IN MILLIMETERS 0 20 40 60 80

DGN FILE =>04-0120f1_E-909A.dgn
USERNAME =>llorico

CU 04251

EA 0120F1

DIST	COUNTY	ROUTE	KILOMETER POST TOTAL PROJECT	SHEET No	TOTAL SHEETS
04	SF,Ala	80	12.2/14.3 0.0/4.0	407a 09S17	1204

Syn Yee Chin 03/08/10
REGISTERED ELECTRICAL ENGINEER DATE

05-06-2010
PLANS APPROVAL DATE

REGISTERED PROFESSIONAL ENGINEER
SYN YEE CHIN
No. 18186
Exp. 09/30/2011
ELECTRICAL
STATE OF CALIFORNIA

PB AMERICAS, Inc.
A Parsons Brinckerhoff Company
303 Second St., Suite 700N
San Francisco, CA 94107-1317

The State of California or its officers or agents shall not be responsible for the accuracy or completeness of electronic copies of this plan sheet.

Caltrans now has a web site! To get to the web site, go to http://www.dot.ca.gov

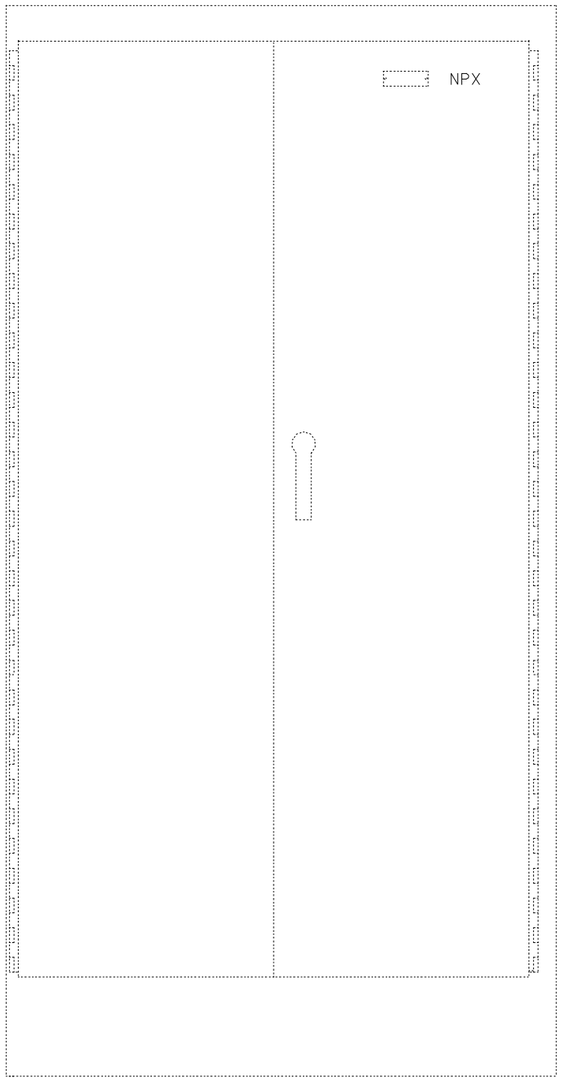

REAR EXTERIOR

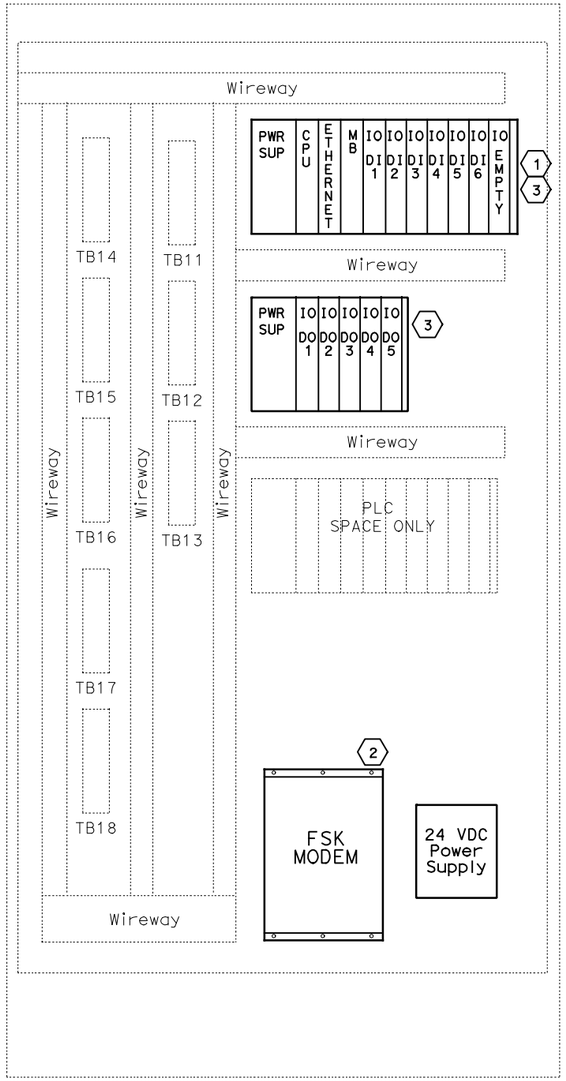

FRONT INTERIOR

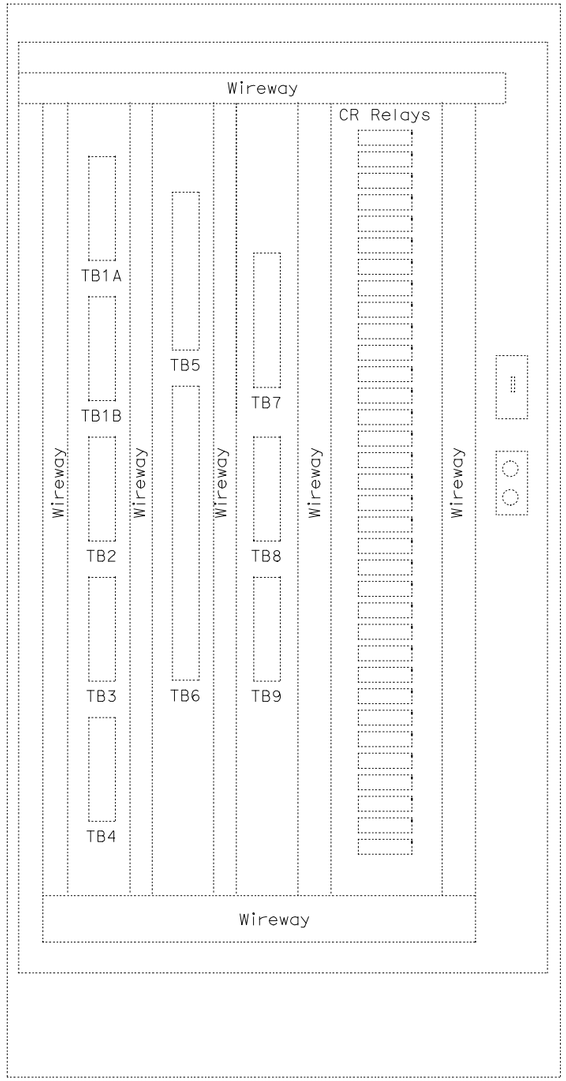

REAR INTERIOR

NOTES:

1. Refer to the special provisions for the PLC and FSK modem requirements.
2. For RTU wiring refer to the following sheets:
   RTU #13W-sheets E-911 through E-920.
   RTU #13E-sheets E-921 through E-930.

SHEET NOTES:

(1) Contractor shall furnish and install a new GE Fanuc PAC Systems RX3i PLC in the existing RTU.

(2) Contractor shall furnish and install a new Frequency Shift Key (FSK) modem and 120v (AC) to 21v-28v (DC) power supply in the existing RTU.

(3) Contractor shall install the input and output cards.

REQUEST FOR INFORMATION NOT ADDRESSED IN THIS CCO REMAIN IN FORCE

MARK	DATE	DESCRIPTIONS	BY	CH'D	CCO#
		REVISIONS			
0	03/08/10	MEP INTEGRATION	JE	FW	110

CONTRACT CHANGE ORDER NO._____
SHEET _____ OF _____

DETAILS
SCADA REMOTE TERMINAL UNIT SYSTEM
RTU #13W AND #13E ASSEMBLY
NO SCALE

E-910

CALCULATED/ DESIGNED BY	SYC	DATE 01/10	REVISED BY
CHECKED BY	FW	01/10	DATE REVISED

DESIGN OVERSIGHT
BEHZAD GOLEMOHAMMADI

STATE OF CALIFORNIA - DEPARTMENT OF TRANSPORTATION
Caltrans

THIS PLAN ACCURATE FOR ELECTRICAL WORK ONLY.

FOR REDUCED PLANS ORIGINAL SCALE IS IN MILLIMETERS 0 20 40 60 80

DGN FILE =>04-0120f1_E-910.dgn
USERNAME =>llorico

CU 04251

EA 0120F1

LAST REVISION 00-00-00
DATE PLOTTED => 06-MAY-2010
TIME PLOTTED => 19:06

DIST	COUNTY	ROUTE	KILOMETER POST TOTAL PROJECT	SHEET No	TOTAL SHEETS
04	SF,Ala	80	12.2/14.3 0.0/4.0	407a 09S18	1204

SynYee Chin 03/08/10
REGISTERED ELECTRICAL ENGINEER DATE

SYN YEE CHIN No. 18186 Exp. 09/30/2011 ELECTRICAL — REGISTERED PROFESSIONAL ENGINEER — STATE OF CALIFORNIA

05-06-2010
PLANS APPROVAL DATE

PB AMERICAS, Inc.
A Parsons Brinckerhoff Company
303 Second St., Suite 700N
San Francisco, CA 94107-1317

The State of California or its officers or agents shall not be responsible for the accuracy or completeness of electronic copies of this plan sheet.

Caltrans now has a web site! To get to the web site, go to http://www.dot.ca.gov

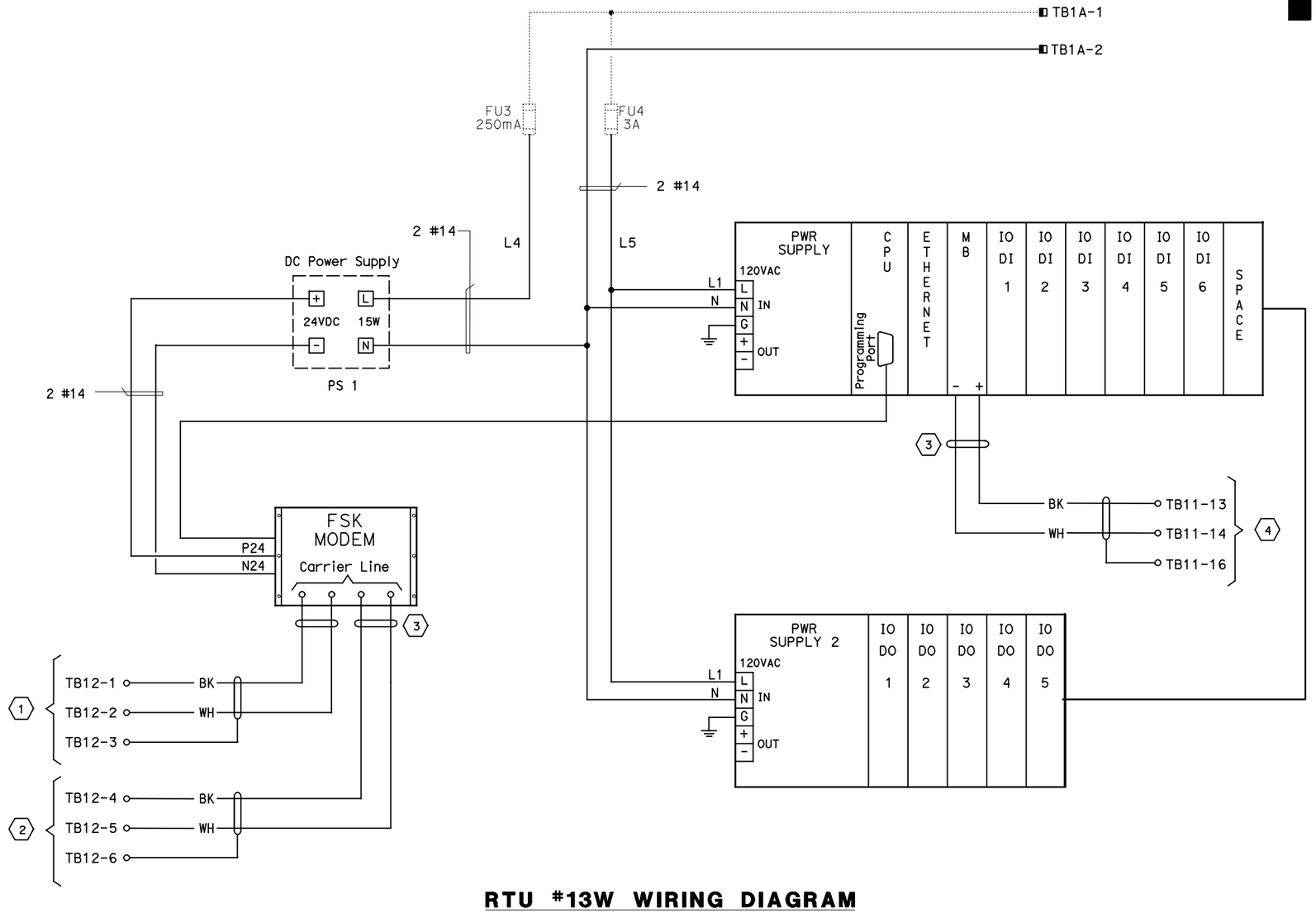

RTU #13W WIRING DIAGRAM

NOTES:

1. Refer to the special provisions for the PLC and FSK Modem requirements.
2. For RTU wiring refer to sheets E-912 through E-920.
3. For FSK Modems interconnect wiring, see sheet E-902.
4. Contractor shall wire connection shown by bold lines.

SHEET NOTES:

1. Pair 1 of 50 pair SCADA cable.
2. Pair 2 of 50 pair SCADA cable.
3. Contractor to tape shield.
4. To management relay communication cable, see sheet E-920.

REQUEST FOR INFORMATION NOT ADDRESSED IN THIS CCO REMAIN IN FORCE

MARK	DATE	REVISIONS	BY	CH'D	CCO#
0	03/08/10	MEP INTEGRATION	JE	FW	110

CONTRACT CHANGE ORDER NO._____
SHEET _____ OF _____

DETAILS
SCADA REMOTE TERMINAL UNIT SYSTEM
RTU #13W WIRING DIAGRAM
NO SCALE

E-911

CALCULATED/DESIGNED BY — CHECKED BY
DATE 01/10 — SYC — FW
REVISED BY — DATE REVISED

DESIGN OVERSIGHT
BEHZAD GOLEMOHAMMADI

STATE OF CALIFORNIA - DEPARTMENT OF TRANSPORTATION
Caltrans

THIS PLAN ACCURATE FOR ELECTRICAL WORK ONLY.

LAST REVISION 00-00-00
DATE PLOTTED => 06-MAY-2010
TIME PLOTTED => 19:06

FOR REDUCED PLANS ORIGINAL SCALE IS IN MILLIMETERS 0 20 40 60 80

DGN FILE =>04-0120f1_E-911.dgn
USERNAME =>llorico

CU 04251

EA 0120F1

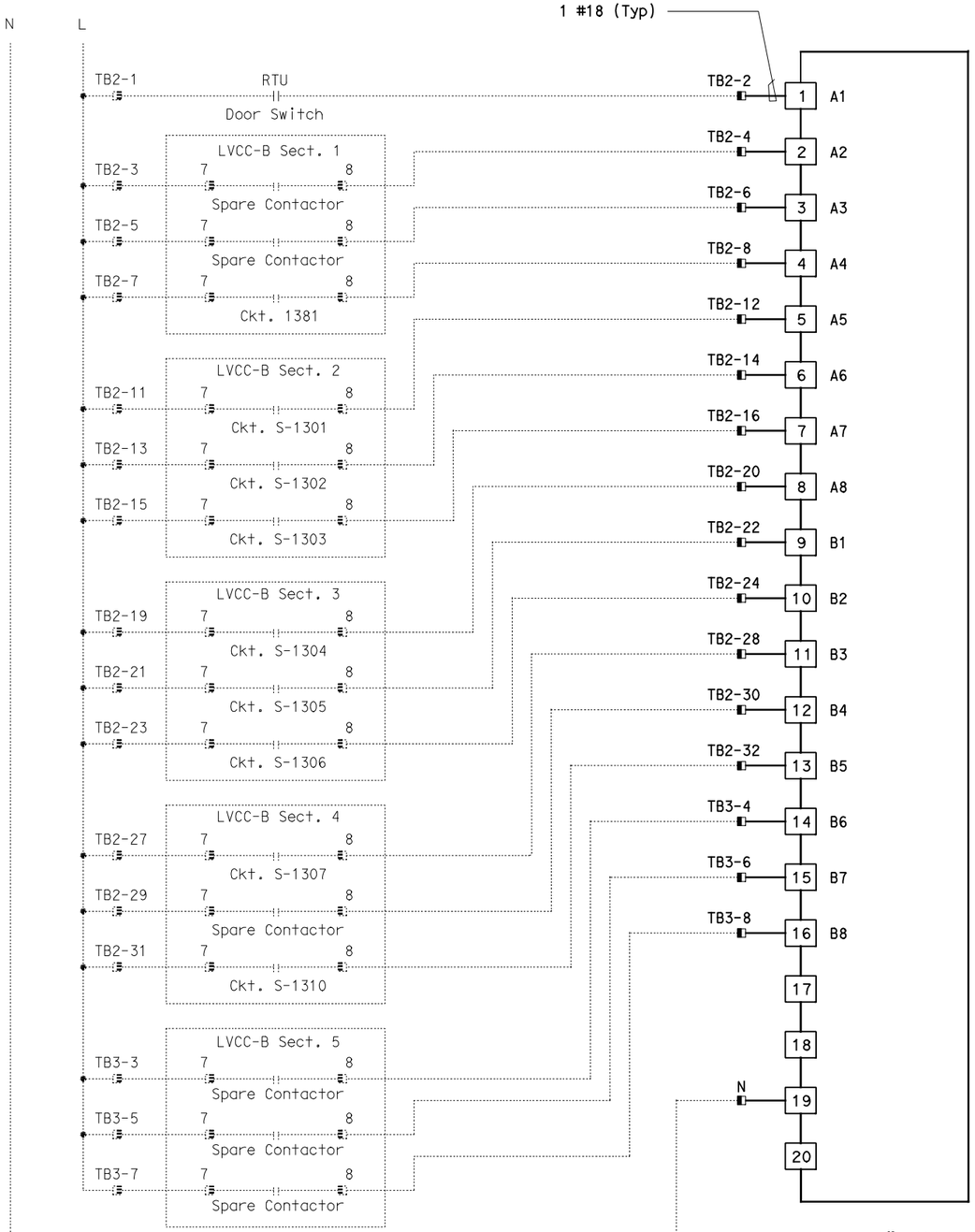

RTU #13W

16 POINT DIGITAL INPUT
RACK 1, SLOT 4

DIST	COUNTY	ROUTE	KILOMETER POST TOTAL PROJECT	SHEET No	TOTAL SHEETS
04	SF,Ala	80	12.2/14.3 0.0/4.0	407a 09S19	1204

Syn Yee Chin 03/08/10
REGISTERED ELECTRICAL ENGINEER DATE

05-06-2010
PLANS APPROVAL DATE

REGISTERED PROFESSIONAL ENGINEER
SYN YEE CHIN
No. 18186
Exp. 09/30/2011
ELECTRICAL
STATE OF CALIFORNIA

PB AMERICAS, Inc.
A Parsons Brinckerhoff Company
303 Second St., Suite 700N
San Francisco, CA 94107-1317

The State of California or its officers or agents shall not be responsible for the accuracy or completeness of electronic copies of this plan sheet.

Caltrans now has a web site! To get to the web site, go to http://www.dot.ca.gov

NOTES:

1. Contractor shall install input card. See sheet E-910 for location.
2. Contractor shall wire connection shown by bold lines.

REQUEST FOR INFORMATION NOT ADDRESSED IN THIS CCO REMAIN IN FORCE

MARK	DATE	REVISIONS DESCRIPTIONS	BY	CH'D	CCO#
0	03/08/10	MEP INTEGRATION	JE	FW	110

CONTRACT CHANGE ORDER NO._____
SHEET _____ OF _____

DETAILS
SCADA REMOTE TERMINAL UNIT SYSTEM
RTU #13W WIRING DIAGRAM
NO SCALE

E-912

STATE OF CALIFORNIA - DEPARTMENT OF TRANSPORTATION
Caltrans

DESIGN OVERSIGHT
BEHZAD GOLEMOHAMMADI

CALCULATED/ DESIGNED BY
CHECKED BY

DATE	BY	REVISED BY	DATE REVISED
01/10	FW	01/10	

LAST REVISION 00-00-00
DATE PLOTTED => 06-MAY-2010
TIME PLOTTED => 19:06

THIS PLAN ACCURATE FOR ELECTRICAL WORK ONLY.

FOR REDUCED PLANS ORIGINAL SCALE IS IN MILLIMETERS 0 20 40 60 80

DGN FILE =>04-0120f1_E-912.dgn
USERNAME =>llorico

CU 04251

EA 0120F1

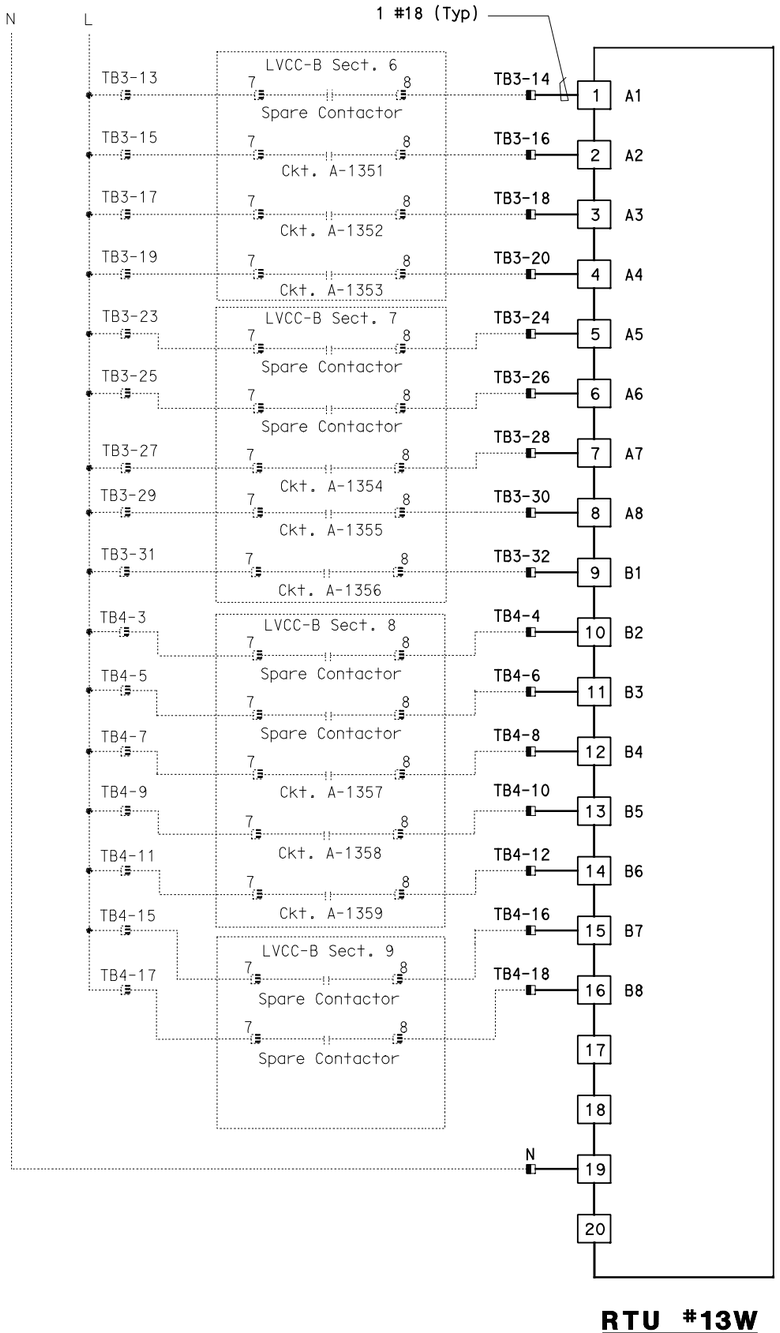

RTU #13W

16 POINT DIGITAL INPUT
RACK 1, SLOT 5

DIST	COUNTY	ROUTE	KILOMETER POST TOTAL PROJECT	SHEET No	TOTAL SHEETS
04	SF, Ala	80	12.2/14.3 0.0/4.0	407a 09S20	1204

Syn Yee Chin 03/08/10
REGISTERED ELECTRICAL ENGINEER DATE

05-06-2010
PLANS APPROVAL DATE

REGISTERED PROFESSIONAL ENGINEER
SYN YEE CHIN
No. 18186
Exp. 09/30/2011
ELECTRICAL
STATE OF CALIFORNIA

PB AMERICAS, Inc.
A Parsons Brinckerhoff Company
303 Second St., Suite 700N
San Francisco, CA 94107-1317

The State of California or its officers or agents shall not be responsible for the accuracy or completeness of electronic copies of this plan sheet.

Caltrans now has a web site! To get to the web site, go to http://www.dot.ca.gov

NOTES:

1. Contractor shall install input card. See sheet E-910 for location.
2. Contractor shall wire connection shown by bold lines.

REQUEST FOR INFORMATION NOT ADDRESSED IN THIS CCO REMAIN IN FORCE

MARK	DATE	DESCRIPTIONS	BY	CH'D	CCO#
		REVISIONS			
0	03/08/10	MEP INTEGRATION	JE	FW	110

CONTRACT CHANGE ORDER NO._____
SHEET _____ OF _____

DETAILS
SCADA REMOTE TERMINAL UNIT SYSTEM
RTU #13W WIRING DIAGRAM
NO SCALE

E-912A

DESIGN OVERSIGHT
BEHZAD GOLEMOHAMMADI

CALCULATED/ DESIGNED BY
CHECKED BY
SYC
FW
DATE 01/10
01/10
REVISED BY
DATE REVISED

STATE OF CALIFORNIA - DEPARTMENT OF TRANSPORTATION
Caltrans

THIS PLAN ACCURATE FOR ELECTRICAL WORK ONLY.

LAST REVISION 00-00-00
DATE PLOTTED => 06-MAY-2010
TIME PLOTTED => 19:07

FOR REDUCED PLANS ORIGINAL SCALE IS IN MILLIMETERS 0 20 40 60 80
DGN FILE =>04-0120f1_E-912A.dgn
USERNAME =>llorico
CU 04251
EA 0120F1

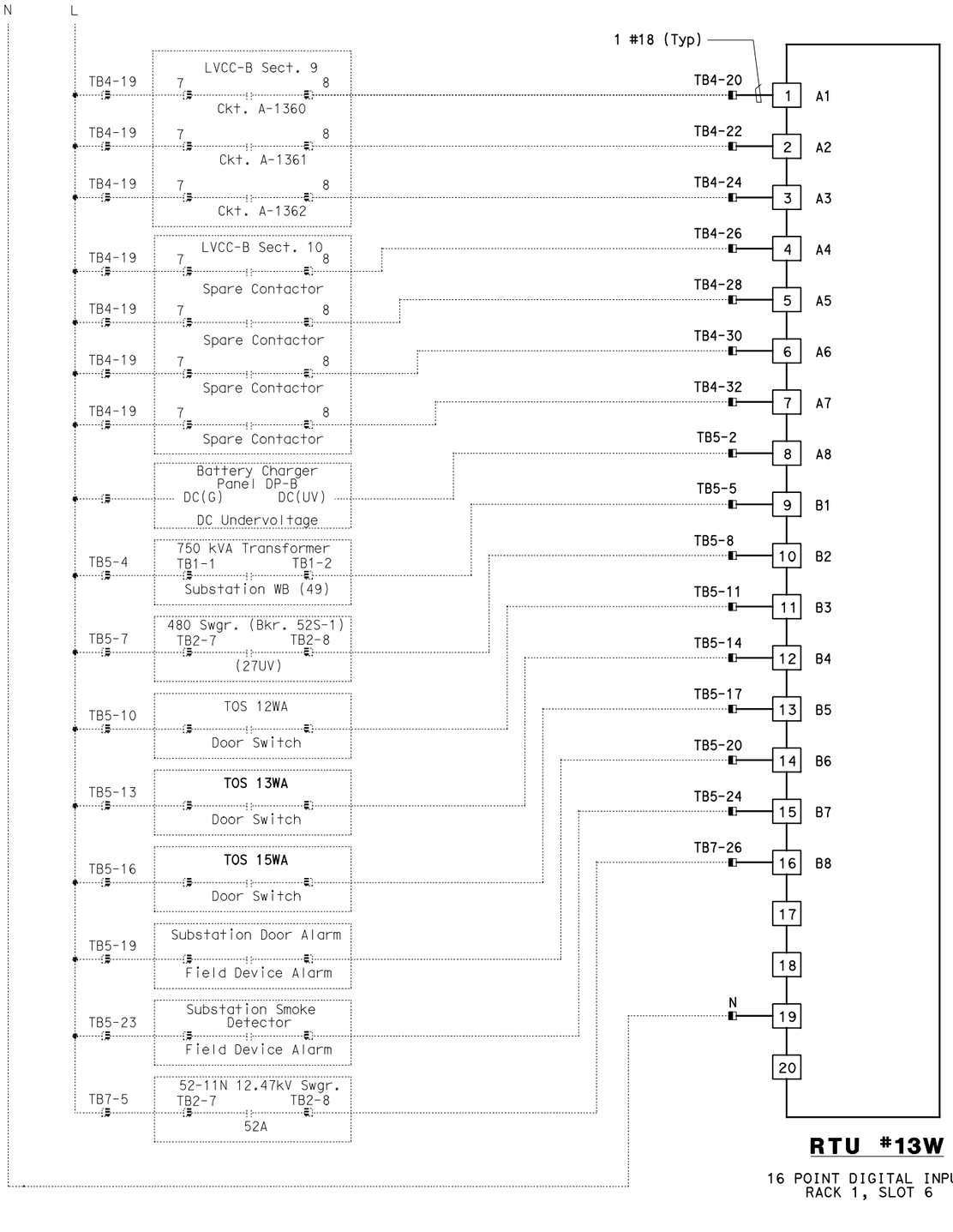

RTU #13W

16 POINT DIGITAL INPUT
RACK 1, SLOT 6

DIST	COUNTY	ROUTE	KILOMETER POST TOTAL PROJECT	SHEET No	TOTAL SHEETS
04	SF,Ala	80	12.2/14.3 0.0/4.0	407a 09S21	1204

Syn Yee Chin 03/08/10
REGISTERED ELECTRICAL ENGINEER DATE

05-06-2010
PLANS APPROVAL DATE

REGISTERED PROFESSIONAL ENGINEER
SYN YEE CHIN
No. 18186
Exp. 09/30/2011
ELECTRICAL
STATE OF CALIFORNIA

PB AMERICAS, Inc.
A Parsons Brinckerhoff Company
303 Second St., Suite 700N
San Francisco, CA 94107-1317

The State of California or its officers or agents shall not be responsible for the accuracy or completeness of electronic copies of this plan sheet.

Caltrans now has a web site! To get to the web site, go to http://www.dot.ca.gov

NOTES:

1. Contractor shall install input card. See sheet E-910 for location.
2. Contractor shall wire connection shown by bold lines.

REQUEST FOR INFORMATION NOT ADDRESSED IN THIS CCO REMAIN IN FORCE

MARK	DATE	DESCRIPTIONS	BY	CH'D	CCO#
		REVISIONS			
0	03/08/10	MEP INTEGRATION	JE	FW	110

CONTRACT CHANGE ORDER NO._____
SHEET _____ OF _____

DETAILS
SCADA REMOTE TERMINAL UNIT SYSTEM
RTU #13W WIRING DIAGRAM
NO SCALE

E-913

CALCULATED/ DESIGNED BY	CHECKED BY
SYC	FW
DATE 01/10	01/10
REVISED BY	DATE REVISED

DESIGN OVERSIGHT
BEHZAD GOLEMOHAMMADI

STATE OF CALIFORNIA - DEPARTMENT OF TRANSPORTATION
Caltrans

THIS PLAN ACCURATE FOR ELECTRICAL WORK ONLY.

LAST REVISION 00-00-00
DATE PLOTTED => 06-MAY-2010
TIME PLOTTED => 19:07

FOR REDUCED PLANS ORIGINAL SCALE IS IN MILLIMETERS 0 20 40 60 80
DGN FILE =>04-0120f1_E-913.dgn
USERNAME =>llorico
CU 04251
EA 0120F1

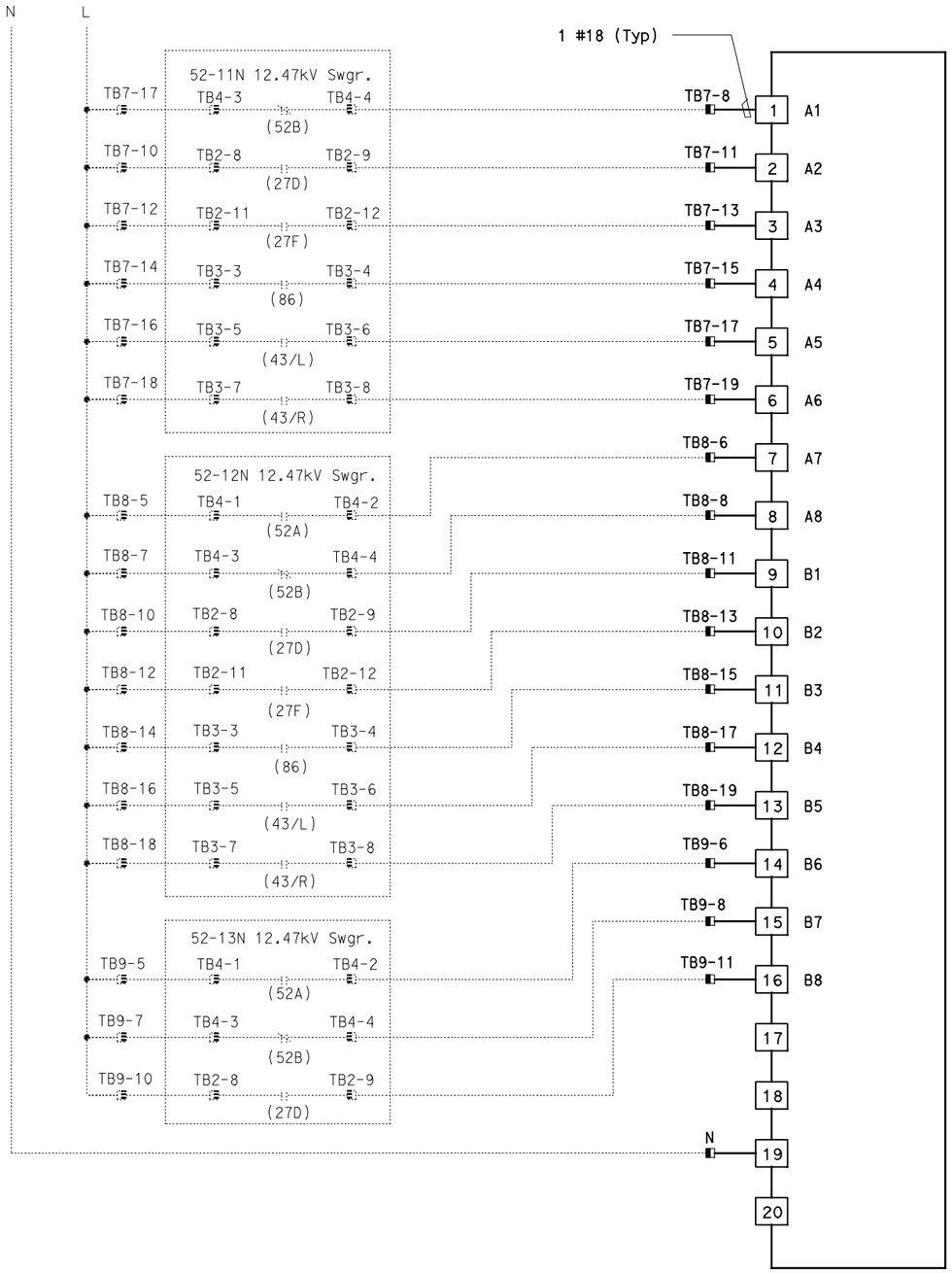

RTU #13W

16 POINT DIGITAL INPUT
RACK 1, SLOT 7

Caltrans Metric

DIST	COUNTY	ROUTE	KILOMETER POST TOTAL PROJECT	SHEET No	TOTAL SHEETS
04	SF, Ala	80	12.2/14.3 0.0/4.0	407a 09S22	1204

Syn Yee Chin 03/08/10
REGISTERED ELECTRICAL ENGINEER DATE

05-06-2010
PLANS APPROVAL DATE

REGISTERED PROFESSIONAL ENGINEER — SYN YEE CHIN No. 18186 Exp. 09/30/2011 ELECTRICAL — STATE OF CALIFORNIA

PB AMERICAS, Inc.
A Parsons Brinckerhoff Company
303 Second St., Suite 700N
San Francisco, CA 94107-1317

The State of California or its officers or agents shall not be responsible for the accuracy or completeness of electronic copies of this plan sheet.

Caltrans now has a web site! To get to the web site, go to http://www.dot.ca.gov

NOTES:

1. Contractor shall install input card. See sheet E-910 for location.
2. Contractor shall wire connection shown by bold lines.

REQUEST FOR INFORMATION NOT ADDRESSED IN THIS CCO REMAIN IN FORCE

MARK	DATE	DESCRIPTIONS	BY	CH'D	CCO#
		REVISIONS			
0	03/08/10	MEP INTEGRATION	JE	FW	110

CONTRACT CHANGE ORDER NO._____
SHEET _____ OF _____

DETAILS
SCADA REMOTE TERMINAL UNIT SYSTEM
RTU #13W WIRING DIAGRAM
NO SCALE

E-914

CALCULATED/ DESIGNED BY	CHECKED BY	DESIGN OVERSIGHT	STATE OF CALIFORNIA - DEPARTMENT OF TRANSPORTATION
SYC	FW	BEHZAD GOLEMOHAMMADI	Caltrans

DATE	REVISED BY
01/10	DATE REVISED

THIS PLAN ACCURATE FOR ELECTRICAL WORK ONLY.

FOR REDUCED PLANS ORIGINAL SCALE IS IN MILLIMETERS 0 20 40 60 80

DGN FILE =>04-0120f1_E-914.dgn
USERNAME =>llorico

CU 04251

EA 0120F1

LAST REVISION 00-00-00
DATE PLOTTED => 06-MAY-2010
TIME PLOTTED => 19:07

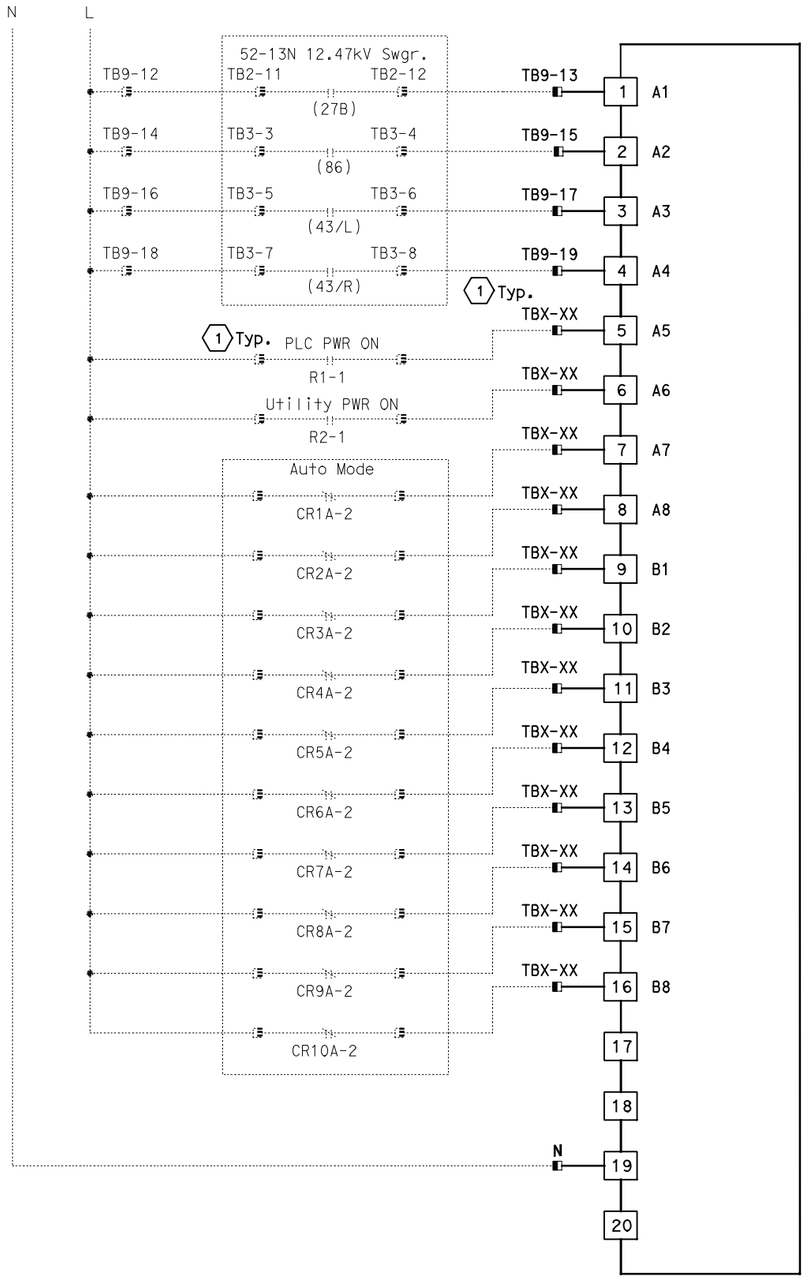

RTU #13W

16 POINT DIGITAL INPUT
RACK 1, SLOT 8

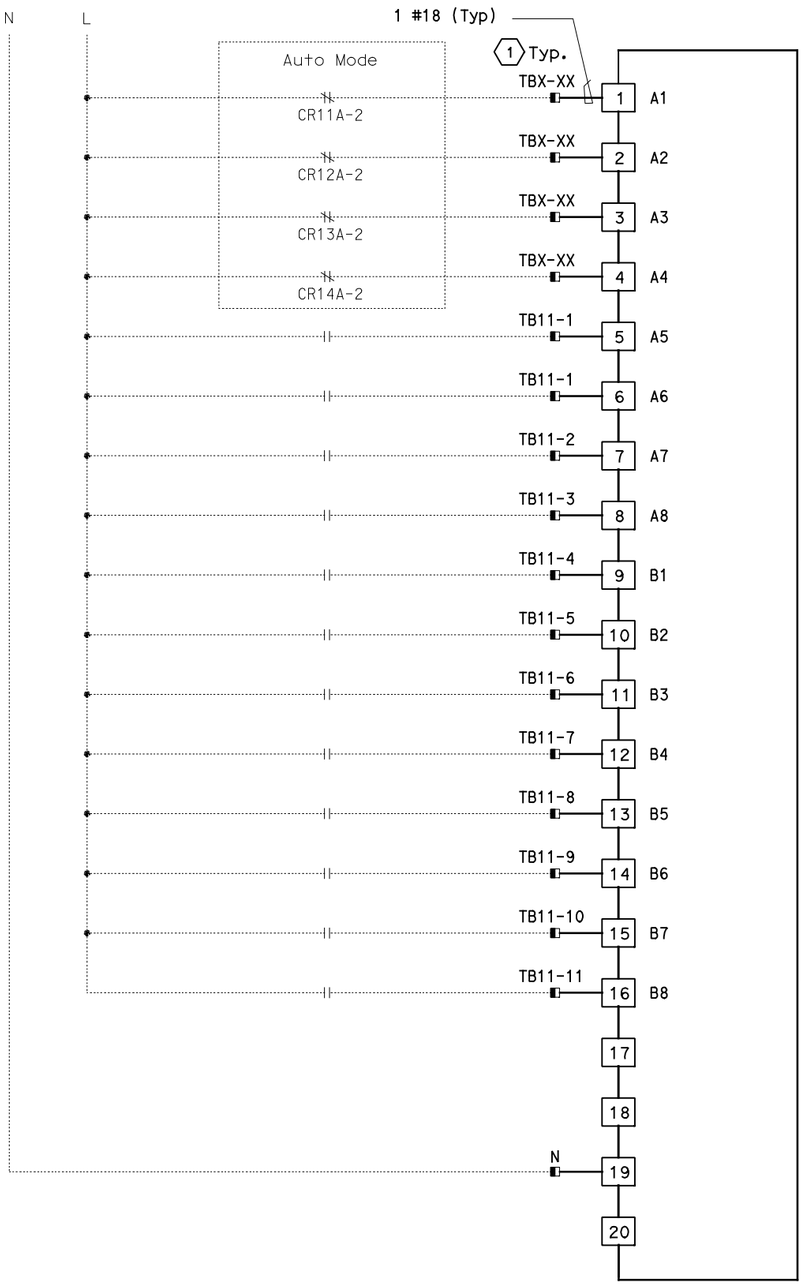

RTU #13W

16 POINT DIGITAL INPUT
RACK 1, SLOT 9

DIST	COUNTY	ROUTE	KILOMETER POST TOTAL PROJECT	SHEET No	TOTAL SHEETS
04	SF, Ala	80	12.2/14.3 0.0/4.0	407a 09S23	1204

Syn Yee Chin 03/08/10
REGISTERED ELECTRICAL ENGINEER DATE

05-06-2010
PLANS APPROVAL DATE

REGISTERED PROFESSIONAL ENGINEER
SYN YEE CHIN
No. 18186
Exp. 09/30/2011
ELECTRICAL
STATE OF CALIFORNIA

PB AMERICAS, Inc.
A Parsons Brinckerhoff Company
303 Second St., Suite 700N
San Francisco, CA 94107-1317

The State of California or its officers or agents shall not be responsible for the accuracy or completeness of electronic copies of this plan sheet.

Caltrans now has a web site! To get to the web site, go to http://www.dot.ca.gov

NOTES:

1. Contractor shall install input cards. See sheet E-910 for location.
2. Contractor shall wire connection shown by bold lines.

SHEET NOTES:

(1) Contractor to field verify the "TBX-XX" terminal block designations, and equipment contact identification.

REQUEST FOR INFORMATION NOT ADDRESSED IN THIS CCO REMAIN IN FORCE

MARK	DATE	DESCRIPTIONS	BY	CH'D	CCO#
		REVISIONS			
0	03/08/10	MEP INTEGRATION	JE	FW	110

CONTRACT CHANGE ORDER NO._____
SHEET _____ OF _____

DETAILS
SCADA REMOTE TERMINAL UNIT SYSTEM
RTU #13W WIRING DIAGRAM

NO SCALE

E-915

CALCULATED/ DESIGNED BY	CHECKED BY
SYC	FW
DATE 01/10	01/10
REVISED BY	DATE REVISED

DESIGN OVERSIGHT
BEHZAD GOLEMOHAMMADI

STATE OF CALIFORNIA - DEPARTMENT OF TRANSPORTATION
Caltrans

THIS PLAN ACCURATE FOR ELECTRICAL WORK ONLY.

LAST REVISION 00-00-00
DATE PLOTTED => 06-MAY-2010
TIME PLOTTED => 19:07

FOR REDUCED PLANS ORIGINAL SCALE IS IN MILLIMETERS 0 20 40 60 80

DGN FILE =>04-0120f1_E-915.dgn
USERNAME =>llorico

CU 04251

EA 0120F1

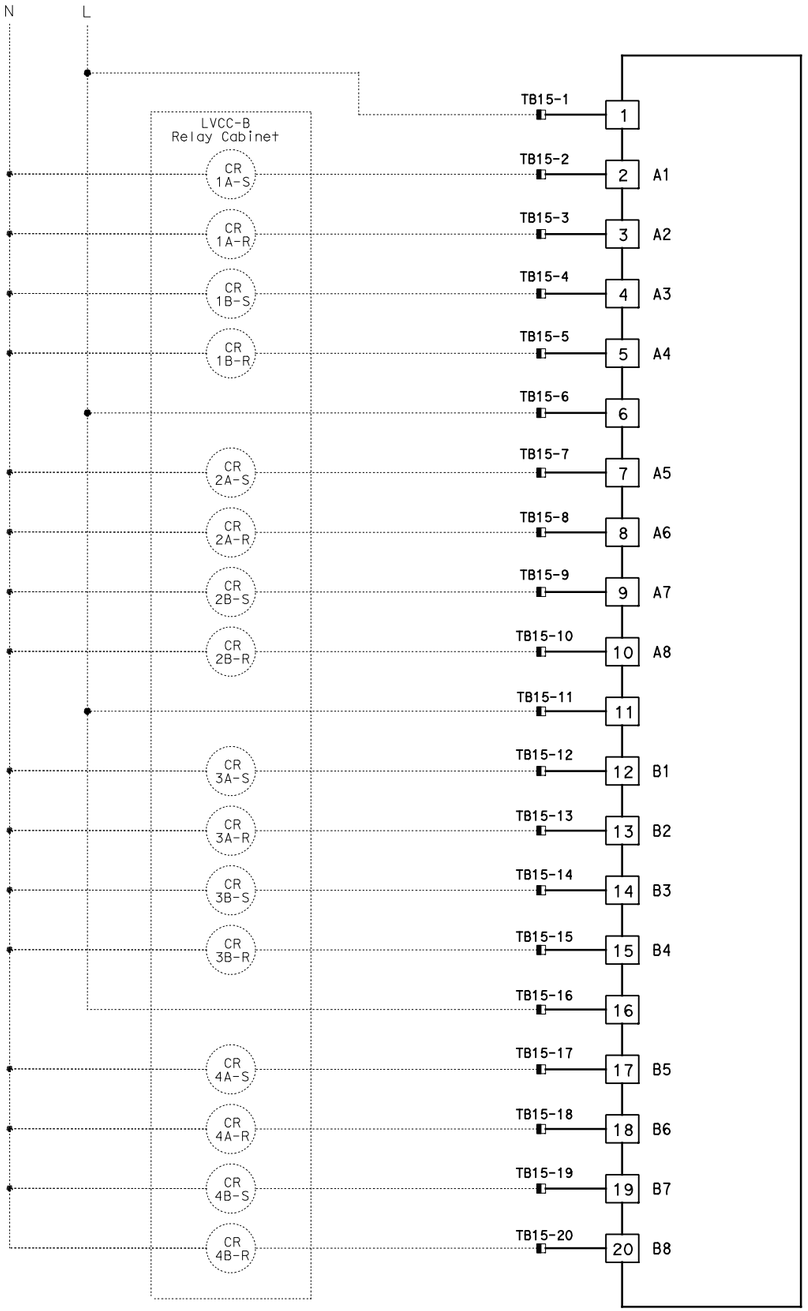

RTU #13W
16 POINT DIGITAL OUTPUT
RACK 2, SLOT 1

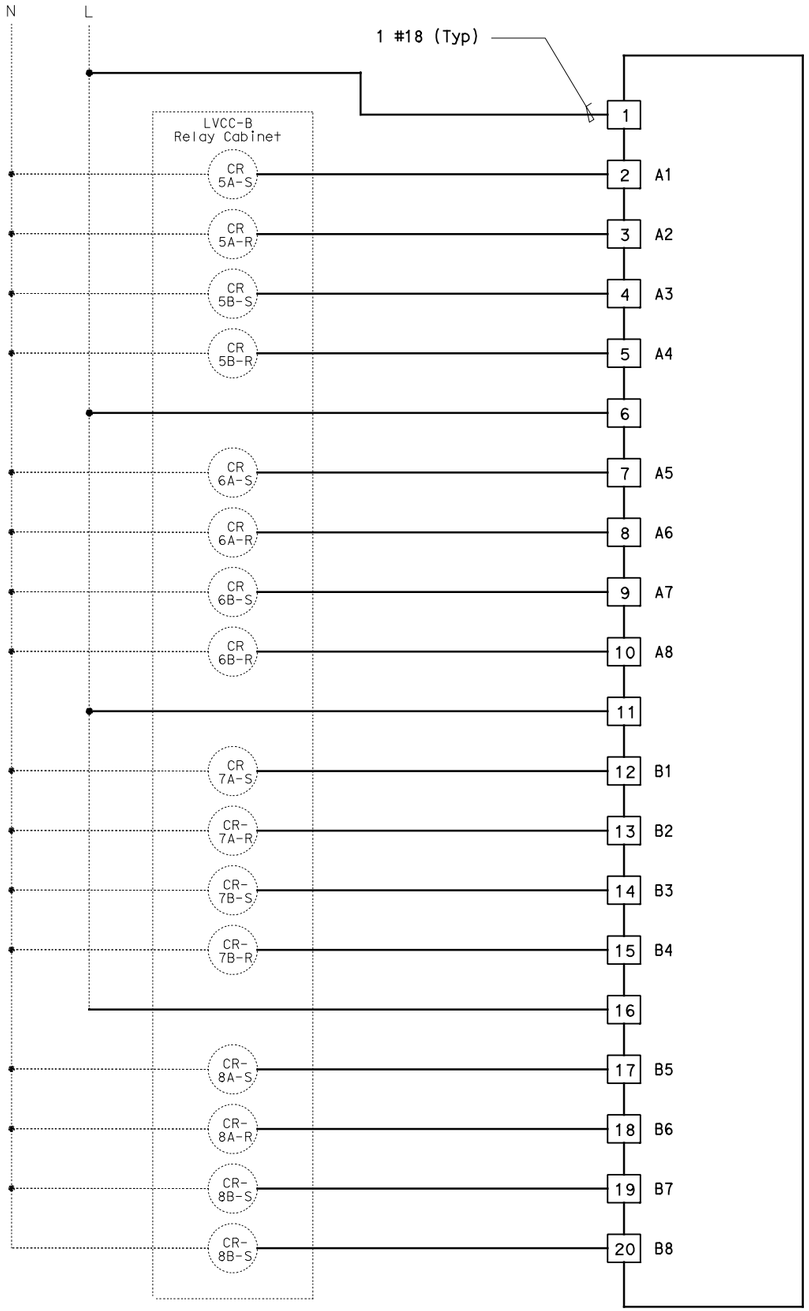

RTU #13W
16 POINT DIGITAL OUTPUT
RACK 2, SLOT 2

DIST	COUNTY	ROUTE	KILOMETER POST TOTAL PROJECT	SHEET No	TOTAL SHEETS
04	SF,Ala	80	12.2/14.3 0.0/4.0	407a 09S24	1204

Syn Yee Chin 03/08/10
REGISTERED ELECTRICAL ENGINEER DATE

05-06-2010
PLANS APPROVAL DATE

REGISTERED PROFESSIONAL ENGINEER
SYN YEE CHIN
No. 18186
Exp. 09/30/2011
ELECTRICAL
STATE OF CALIFORNIA

PB AMERICAS, Inc.
A Parsons Brinckerhoff Company
303 Second St., Suite 700N
San Francisco, CA 94107-1317

The State of California or its officers or agents shall not be responsible for the accuracy or completeness of electronic copies of this plan sheet.

Caltrans now has a web site! To get to the web site, go to http://www.dot.ca.gov

NOTES:

1. Contractor shall install output cards. See sheet E-910 for location.
2. Contractor shall wire connection shown by bold lines.

REQUEST FOR INFORMATION NOT ADDRESSED IN THIS CCO REMAIN IN FORCE

MARK	DATE	DESCRIPTIONS	BY	CH'D	CCO#
		REVISIONS			
0	03/08/10	MEP INTEGRATION	JE	FW	110

CONTRACT CHANGE ORDER NO._____
SHEET _____ OF _____

DETAILS
SCADA REMOTE TERMINAL UNIT SYSTEM
RTU #13W WIRING DIAGRAM
NO SCALE

E-916

DESIGN OVERSIGHT	CALCULATED/ DESIGNED BY	DATE 01/10	REVISED BY	DATE REVISED
BEHZAD GOLEMOHAMMADI	CHECKED BY	SYC FW	01/10	

STATE OF CALIFORNIA - DEPARTMENT OF TRANSPORTATION
Caltrans

THIS PLAN ACCURATE FOR ELECTRICAL WORK ONLY.

FOR REDUCED PLANS ORIGINAL SCALE IS IN MILLIMETERS 0 20 40 60 80

DGN FILE =>04-0120f1_E-916.dgn
USERNAME =>llorico

CU 04251

EA 0120F1

LAST REVISION 00-00-00
DATE PLOTTED => 06-MAY-2010
TIME PLOTTED => 19:07

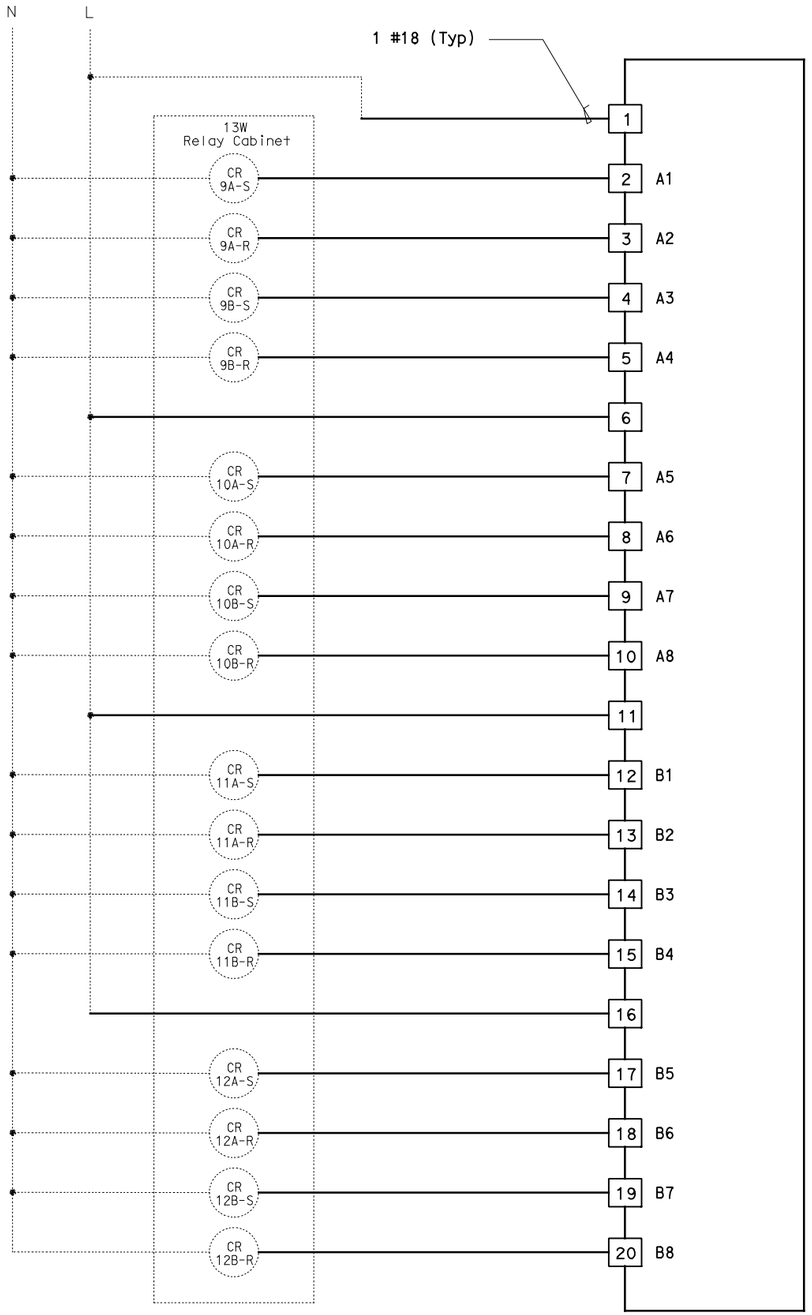

RTU #13W

16 POINT DIGITAL OUTPUT
RACK 2, SLOT 3

Caltrans Metric

DIST	COUNTY	ROUTE	KILOMETER POST TOTAL PROJECT	SHEET No	TOTAL SHEETS
04	SF, Ala	80	12.2/14.3 0.0/4.0	407a 09S25	1204

Syn Yee Chin 03/08/10
REGISTERED ELECTRICAL ENGINEER DATE

05-06-2010
PLANS APPROVAL DATE

REGISTERED PROFESSIONAL ENGINEER
SYN YEE CHIN
No. 18186
Exp. 09/30/2011
ELECTRICAL
STATE OF CALIFORNIA

PB AMERICAS, Inc.
A Parsons Brinckerhoff Company
303 Second St., Suite 700N
San Francisco, CA 94107-1317

The State of California or its officers or agents shall not be responsible for the accuracy or completeness of electronic copies of this plan sheet.

Caltrans now has a web site! To get to the web site, go to http://www.dot.ca.gov

NOTES:

1. Contractor shall install output card. See sheet E-910 for location.
2. Contractor shall wire connection shown by bold lines.

REQUEST FOR INFORMATION NOT ADDRESSED IN THIS CCO REMAIN IN FORCE

MARK	DATE	DESCRIPTIONS (REVISIONS)	BY	CH'D	CCO#
0	03/08/10	MEP INTEGRATION	JE	FW	110

CONTRACT CHANGE ORDER NO._____
SHEET _____ OF _____

DETAILS
SCADA REMOTE TERMINAL UNIT SYSTEM
RTU #13W WIRING DIAGRAM
NO SCALE

E-917

DESIGN OVERSIGHT	CALCULATED/ DESIGNED BY	DATE 01/10	REVISED BY
BEHZAD GOLEMOHAMMADI	CHECKED BY	SYC 01/10	DATE REVISED

STATE OF CALIFORNIA - DEPARTMENT OF TRANSPORTATION
Caltrans

THIS PLAN ACCURATE FOR ELECTRICAL WORK ONLY.

FOR REDUCED PLANS ORIGINAL SCALE IS IN MILLIMETERS 0 20 40 60 80

DGN FILE =>04-0120f1_E-917.dgn
USERNAME =>llorico

CU 04251

EA 0120F1

LAST REVISION 00-00-00
DATE PLOTTED => 06-MAY-2010
TIME PLOTTED => 19:07

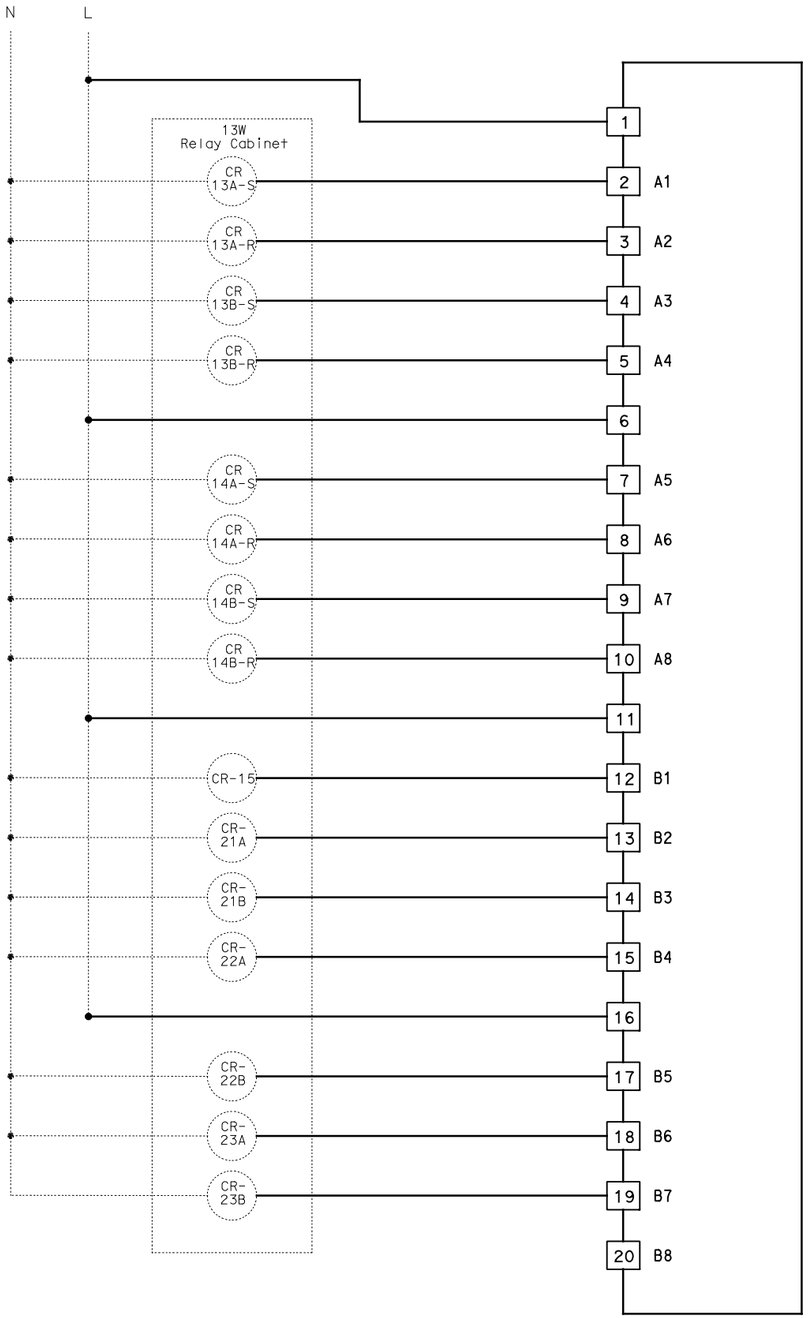

RTU #13W

16 POINT DIGITAL OUTPUT
RACK 2, SLOT 4

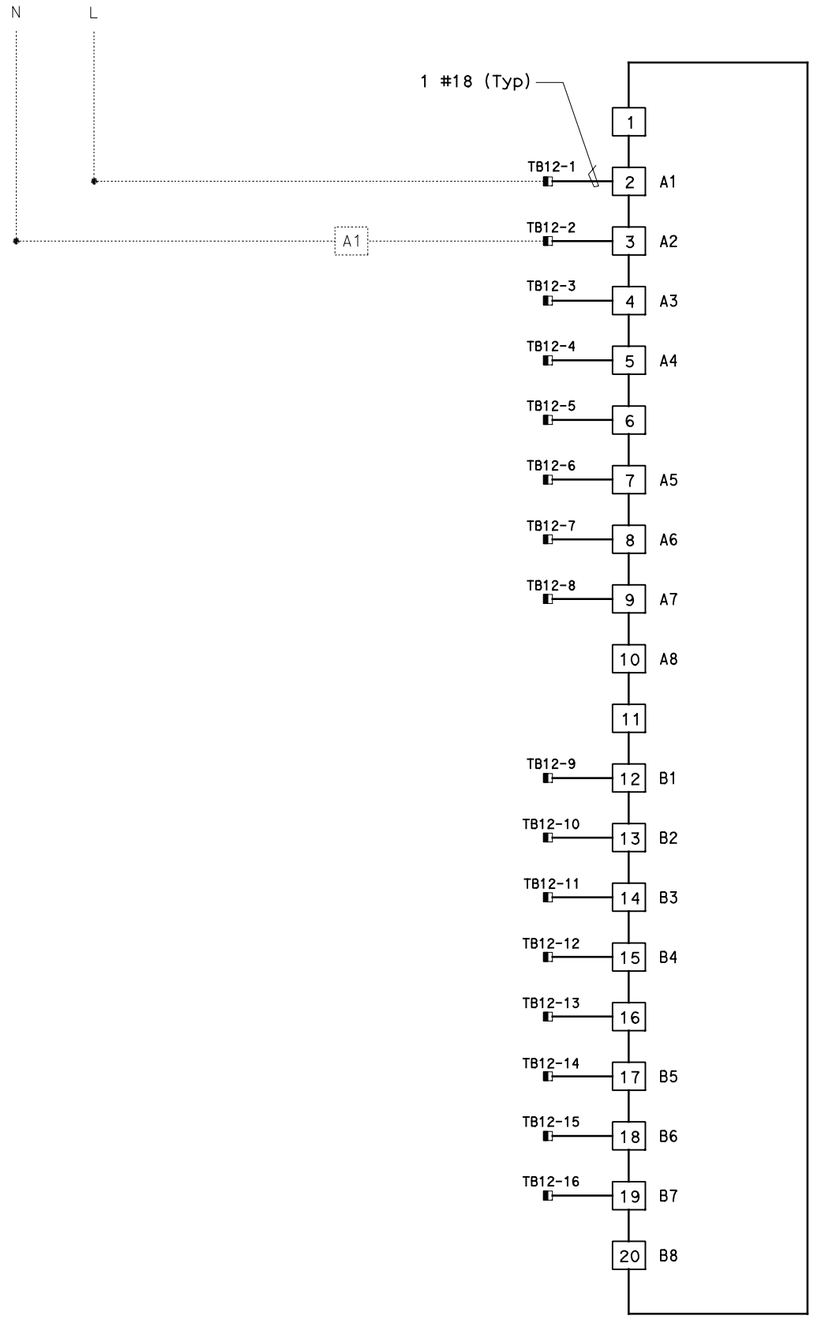

RTU #13W

16 POINT DIGITAL OUTPUT
RACK 2, SLOT 5

DIST	COUNTY	ROUTE	KILOMETER POST TOTAL PROJECT	SHEET No	TOTAL SHEETS
04	SF, Ala	80	12.2/14.3 0.0/4.0	407a 09S26	1204

Syn Yee Chin 03/08/10
REGISTERED ELECTRICAL ENGINEER DATE

05-06-2010
PLANS APPROVAL DATE

REGISTERED PROFESSIONAL ENGINEER
SYN YEE CHIN
No. 18186
Exp. 09/30/2011
ELECTRICAL
STATE OF CALIFORNIA

PB AMERICAS, Inc.
A Parsons Brinckerhoff Company
303 Second St., Suite 700N
San Francisco, CA 94107-1317

The State of California or its officers or agents shall not be responsible for the accuracy or completeness of electronic copies of this plan sheet.

Caltrans now has a web site! To get to the web site, go to http://www.dot.ca.gov

NOTES:

1. Contractor shall install output cards. See sheet E-910 for location.
2. Contractor shall wire connection shown by bold lines.

REQUEST FOR INFORMATION NOT ADDRESSED IN THIS CCO REMAIN IN FORCE

MARK	DATE	DESCRIPTIONS	BY	CH'D	CCO#
		REVISIONS			
0	03/08/10	MEP INTEGRATION	JE	FW	110

CONTRACT CHANGE ORDER NO._____
SHEET _____ OF _____

DETAILS
SCADA REMOTE TERMINAL UNIT SYSTEM
RTU #13W WIRING DIAGRAM

NO SCALE

E-918

DESIGN OVERSIGHT
BEHZAD GOLEMOHAMMADI

CALCULATED/DESIGNED BY
CHECKED BY

REVISED BY	DATE REVISED
SYC	01/10
FW	01/10

STATE OF CALIFORNIA - DEPARTMENT OF TRANSPORTATION
Caltrans

LAST REVISION 00-00-00
DATE PLOTTED => 06-MAY-2010
TIME PLOTTED => 19:07

THIS PLAN ACCURATE FOR ELECTRICAL WORK ONLY.

FOR REDUCED PLANS ORIGINAL SCALE IS IN MILLIMETERS 0 20 40 60 80

DGN FILE =>04-0120f1_E-918.dgn
USERNAME =>llorico

CU 04251

EA 0120F1

DIST	COUNTY	ROUTE	KILOMETER POST TOTAL PROJECT	SHEET No	TOTAL SHEETS
04	SF, Ala	80	12.2/14.3 0.0/4.0	407a 09S27	1204

Syn Yee Chin 03/08/10
REGISTERED ELECTRICAL ENGINEER DATE

SYN YEE CHIN No. 18186 Exp. 09/30/2011 ELECTRICAL — REGISTERED PROFESSIONAL ENGINEER — STATE OF CALIFORNIA

05-06-2010
PLANS APPROVAL DATE

PB AMERICAS, Inc.
A Parsons Brinckerhoff Company
303 Second St., Suite 700N
San Francisco, CA 94107-1317

The State of California or its officers or agents shall not be responsible for the accuracy or completeness of electronic copies of this plan sheet.

Caltrans now has a web site! To get to the web site, go to http://www.dot.ca.gov

NOTES:

1. This plan sheet is a record drawing of the Skyway Structures Remote Terminal Unit #13W. The contractor shall verify the existing installation. See sheet EE-350 from Skyway Structures, Contract No. 04-012024.
2. References:
   Refer to Sheet E-911.

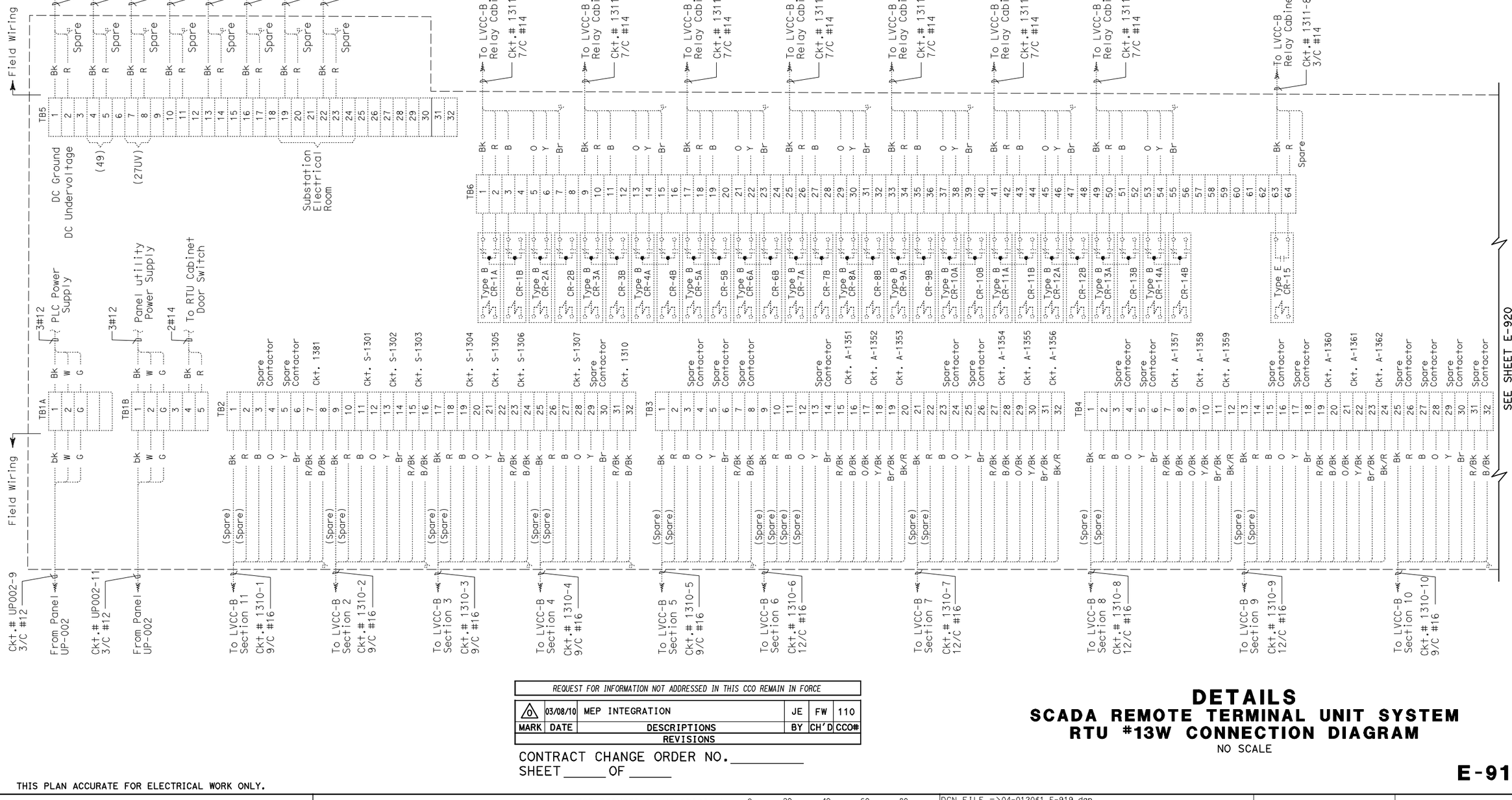

REQUEST FOR INFORMATION NOT ADDRESSED IN THIS CCO REMAIN IN FORCE					
MARK	DATE	DESCRIPTIONS	BY	CH'D	CCO#
		REVISIONS			
0	03/08/10	MEP INTEGRATION	JE	FW	110

CONTRACT CHANGE ORDER NO._____
SHEET _____ OF _____

DETAILS
SCADA REMOTE TERMINAL UNIT SYSTEM
RTU #13W CONNECTION DIAGRAM
NO SCALE

E-919

STATE OF CALIFORNIA - DEPARTMENT OF TRANSPORTATION
Caltrans

	CALCULATED/ DESIGNED BY	SYC	DATE 01/10	REVISED BY
DESIGN OVERSIGHT	CHECKED BY	FW	01/10	DATE REVISED
BEHZAD GOLEMOHAMMADI				

THIS PLAN ACCURATE FOR ELECTRICAL WORK ONLY.

FOR REDUCED PLANS ORIGINAL SCALE IS IN MILLIMETERS 0 20 40 60 80

DGN FILE =>04-0120f1_E-919.dgn
USERNAME =>llorico

CU 04251

EA 0120F1

LAST REVISION 00-00-00 | DATE PLOTTED => 06-MAY-2010 | TIME PLOTTED => 19:07

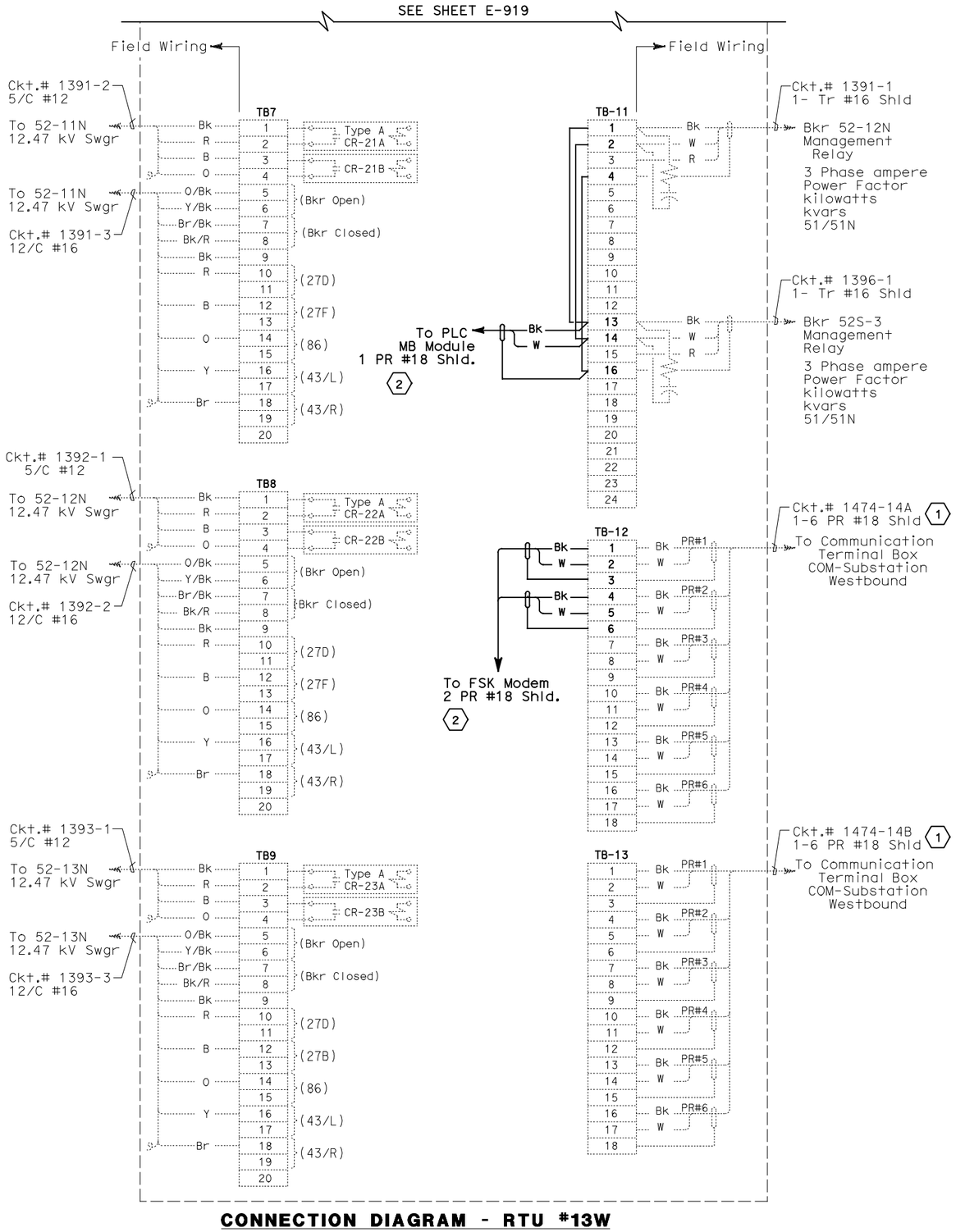

CONNECTION DIAGRAM - RTU #13W

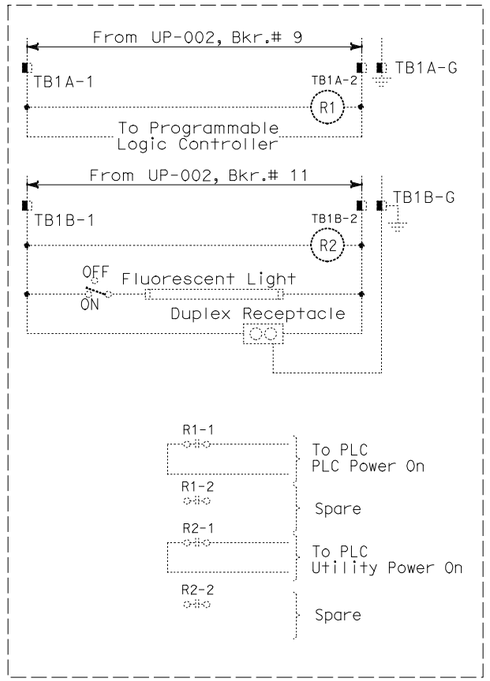

ELEMENTARY DIAGRAM - RTU #13W

DIST	COUNTY	ROUTE	KILOMETER POST TOTAL PROJECT	SHEET No	TOTAL SHEETS
04	SF,Ala	80	12.2/14.3 0.0/4.0	407a 09S28	1204

Syn Yee Chin 03/08/10
REGISTERED ELECTRICAL ENGINEER DATE

05-06-2010
PLANS APPROVAL DATE

REGISTERED PROFESSIONAL ENGINEER
SYN YEE CHIN
No. 18186
Exp. 09/30/2011
ELECTRICAL
STATE OF CALIFORNIA

PB AMERICAS, Inc.
A Parsons Brinckerhoff Company
303 Second St., Suite 700N
San Francisco, CA 94107-1317

The State of California or its officers or agents shall not be responsible for the accuracy or completeness of electronic copies of this plan sheet.

Caltrans now has a web site! To get to the web site, go to http://www.dot.ca.gov

NOTES:

1. This plan sheet is a record drawing of the Skyway Structures Remote Terminal Unit #13W. The Contractor shall verify the existing installation. See sheet EE-351 from the Skyway Structures, contract No. 04-012024.
2. References:
   Refer to Sheet E-911.
3. Contractor shall wire connection shown by bold lines.

SHEET NOTES:

(1) Verify that the shield is not grounded.

(2) Do not ground shield.

REQUEST FOR INFORMATION NOT ADDRESSED IN THIS CCO REMAIN IN FORCE

MARK	DATE	REVISIONS	BY	CH'D	CCO#
0	03/08/10	MEP INTEGRATION	JE	FW	110

CONTRACT CHANGE ORDER NO._____
SHEET _____ OF _____

DETAILS
SCADA REMOTE TERMINAL UNIT SYSTEM
RTU #13W ELEMENTARY AND CONNECTION DIAGRAMS

NO SCALE

E-920

CALCULATED/ DESIGNED BY	SYC	DATE 01/10	REVISED BY
CHECKED BY	FW	01/10	DATE REVISED

DESIGN OVERSIGHT
BEHZAD GOLEMOHAMMADI

STATE OF CALIFORNIA - DEPARTMENT OF TRANSPORTATION
Caltrans

THIS PLAN ACCURATE FOR ELECTRICAL WORK ONLY.

FOR REDUCED PLANS ORIGINAL SCALE IS IN MILLIMETERS 0 20 40 60 80

DGN FILE =>04-0120f1_E-920.dgn
USERNAME =>llorico

CU 04251

EA 0120F1

LAST REVISION 00-00-00
DATE PLOTTED => 06-MAY-2010
TIME PLOTTED => 19:07

DIST	COUNTY	ROUTE	KILOMETER POST TOTAL PROJECT	SHEET No	TOTAL SHEETS
04	SF,Ala	80	12.2/14.3 0.0/4.0	407a 09S29	1204

Syn Yee Chin 03/08/10
REGISTERED ELECTRICAL ENGINEER DATE

05-06-2010
PLANS APPROVAL DATE

REGISTERED PROFESSIONAL ENGINEER
SYN YEE CHIN
No. 18186
Exp. 09/30/2011
ELECTRICAL
STATE OF CALIFORNIA

PB AMERICAS, Inc.
A Parsons Brinckerhoff Company
303 Second St., Suite 700N
San Francisco, CA 94107-1317

The State of California or its officers or agents shall not be responsible for the accuracy or completeness of electronic copies of this plan sheet.

Caltrans now has a web site! To get to the web site, go to http://www.dot.ca.gov

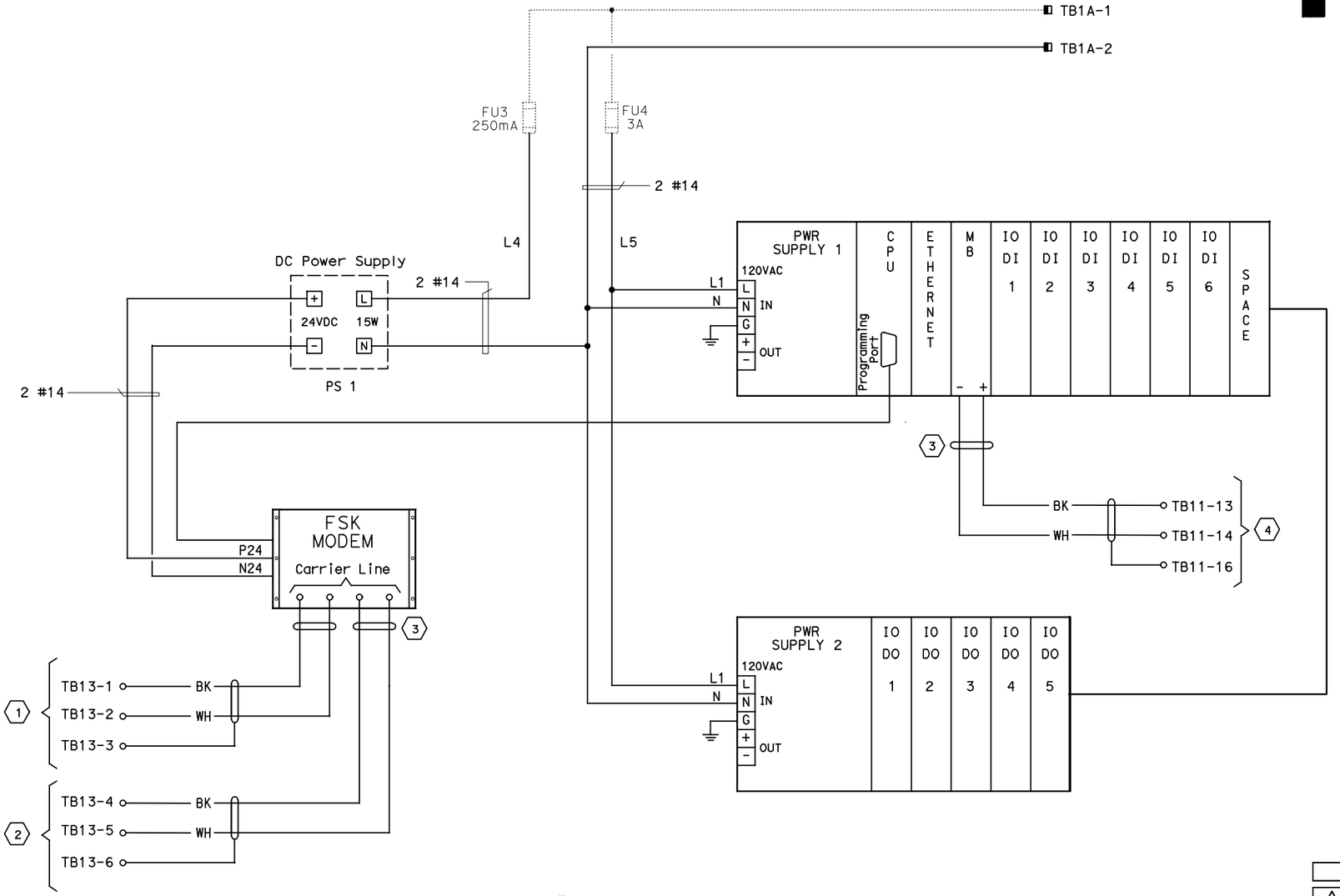

RTU #13E WIRING DIAGRAM

NOTES:

1. Refer to the special provisions for the PLC and FSK Modem requirements.
2. For RTU wiring refer to sheets E-922 through E-930.
3. For FSK Modems interconnect wiring, see sheet E-902.
4. Contractor shall wire connection shown by bold lines.

SHEET NOTES:

(1) Pair 7 of 50 pair SCADA cable.
(2) Pair 8 of 50 pair SCADA cable.
(3) Contractor to tape shield.
(4) To management relay communication cable, see sheet E-930.

REQUEST FOR INFORMATION NOT ADDRESSED IN THIS CCO REMAIN IN FORCE

MARK	DATE	DESCRIPTIONS	BY	CH'D	CCO#
		REVISIONS			
0	03/08/10	MEP INTEGRATION	JE	FW	110

CONTRACT CHANGE ORDER NO._____
SHEET _____ OF _____

DETAILS
SCADA REMOTE TERMINAL UNIT SYSTEM
RTU #13E WIRING DIAGRAM
NO SCALE

E-921

THIS PLAN ACCURATE FOR ELECTRICAL WORK ONLY.

FOR REDUCED PLANS ORIGINAL SCALE IS IN MILLIMETERS 0 20 40 60 80

DGN FILE =>04-0120f1_E-921.dgn
USERNAME =>llorico

CU 04251

EA 0120F1

LAST REVISION 00-00-00
DATE PLOTTED => 06-MAY-2010
TIME PLOTTED => 19:07

STATE OF CALIFORNIA - DEPARTMENT OF TRANSPORTATION
Caltrans

DESIGN OVERSIGHT
BEHZAD GOLEMOHAMMADI

CALCULATED/ DESIGNED BY
CHECKED BY

DATE 01/10 | SYC | REVISED BY
01/10 | FW | DATE REVISED

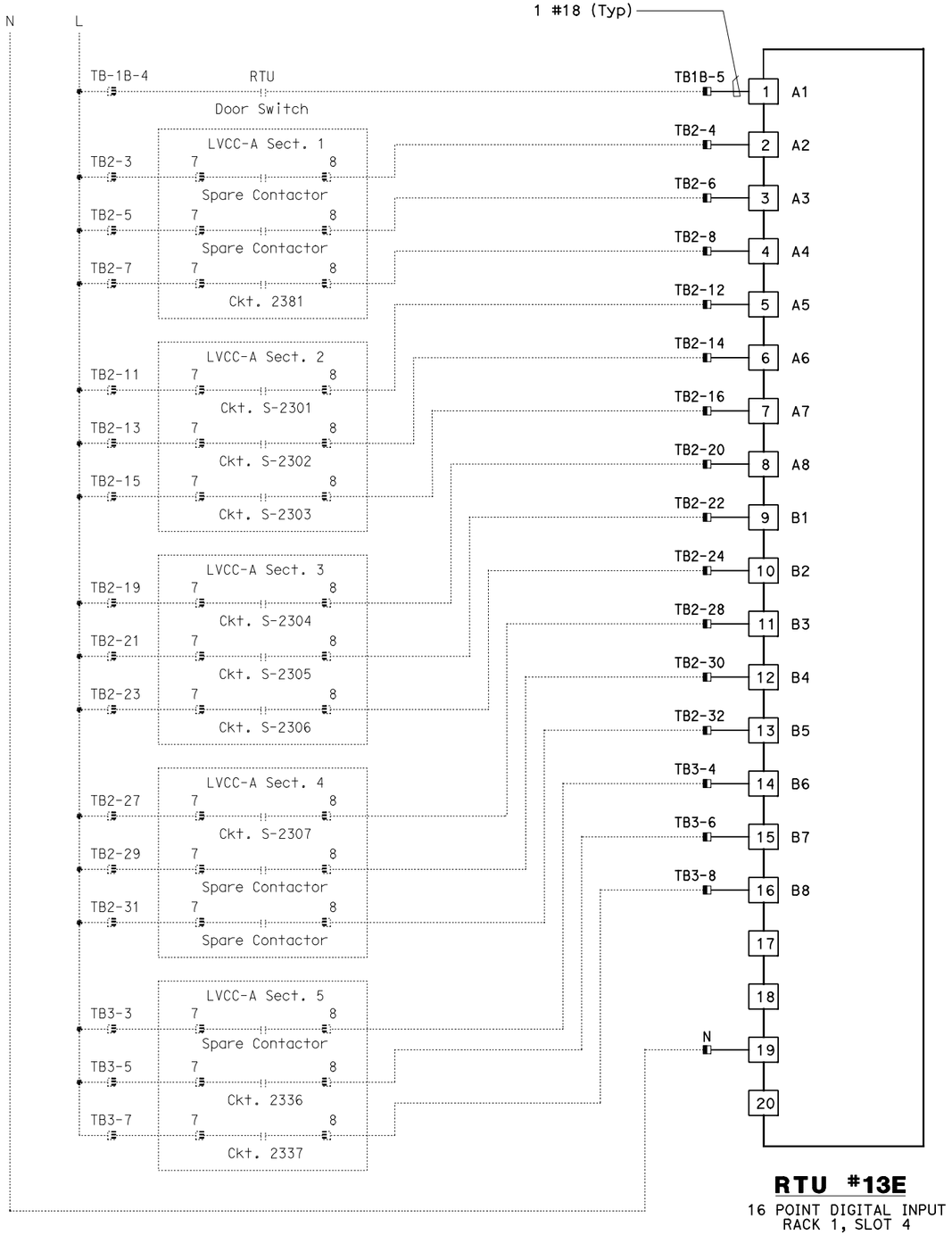

RTU #13E

16 POINT DIGITAL INPUT
RACK 1, SLOT 4

DIST	COUNTY	ROUTE	KILOMETER POST TOTAL PROJECT	SHEET No	TOTAL SHEETS
04	SF, Ala	80	12.2/14.3 0.0/4.0	407a 09S30	1204

Syn Yee Chin 03/08/10
REGISTERED ELECTRICAL ENGINEER DATE

05-06-2010
PLANS APPROVAL DATE

REGISTERED PROFESSIONAL ENGINEER
SYN YEE CHIN
No. 18186
Exp. 09/30/2011
ELECTRICAL
STATE OF CALIFORNIA

PB AMERICAS, Inc.
A Parsons Brinckerhoff Company
303 Second St., Suite 700N
San Francisco, CA 94107-1317

The State of California or its officers or agents shall not be responsible for the accuracy or completeness of electronic copies of this plan sheet.

Caltrans now has a web site! To get to the web site, go to http://www.dot.ca.gov

NOTES:

1. Contractor shall install input card. See sheet E-910 for location.
2. Contractor shall wire connection shown by bold lines.

REQUEST FOR INFORMATION NOT ADDRESSED IN THIS CCO REMAIN IN FORCE

MARK	DATE	REVISIONS / DESCRIPTIONS	BY	CH'D	CCO#
0	03/08/10	MEP INTEGRATION	JE	FW	110

CONTRACT CHANGE ORDER NO._____
SHEET _____ OF _____

DETAILS
SCADA REMOTE TERMINAL UNIT SYSTEM
RTU #13E WIRING DIAGRAM
NO SCALE

E-922

STATE OF CALIFORNIA - DEPARTMENT OF TRANSPORTATION
Caltrans
DESIGN OVERSIGHT
BEHZAD GOLEMOHAMMADI
CALCULATED/ DESIGNED BY
CHECKED BY
DRAWN BY SYC FW
CHECKED BY DATE 01/10 01/10
REVISED BY DATE REVISED

THIS PLAN ACCURATE FOR ELECTRICAL WORK ONLY.

FOR REDUCED PLANS ORIGINAL SCALE IS IN MILLIMETERS 0 20 40 60 80

DGN FILE =>04-0120f1_E-922.dgn
USERNAME =>llorico

CU 04251 EA 0120F1

LAST REVISION 00-00-00
DATE PLOTTED => 06-MAY-2010
TIME PLOTTED => 19:07

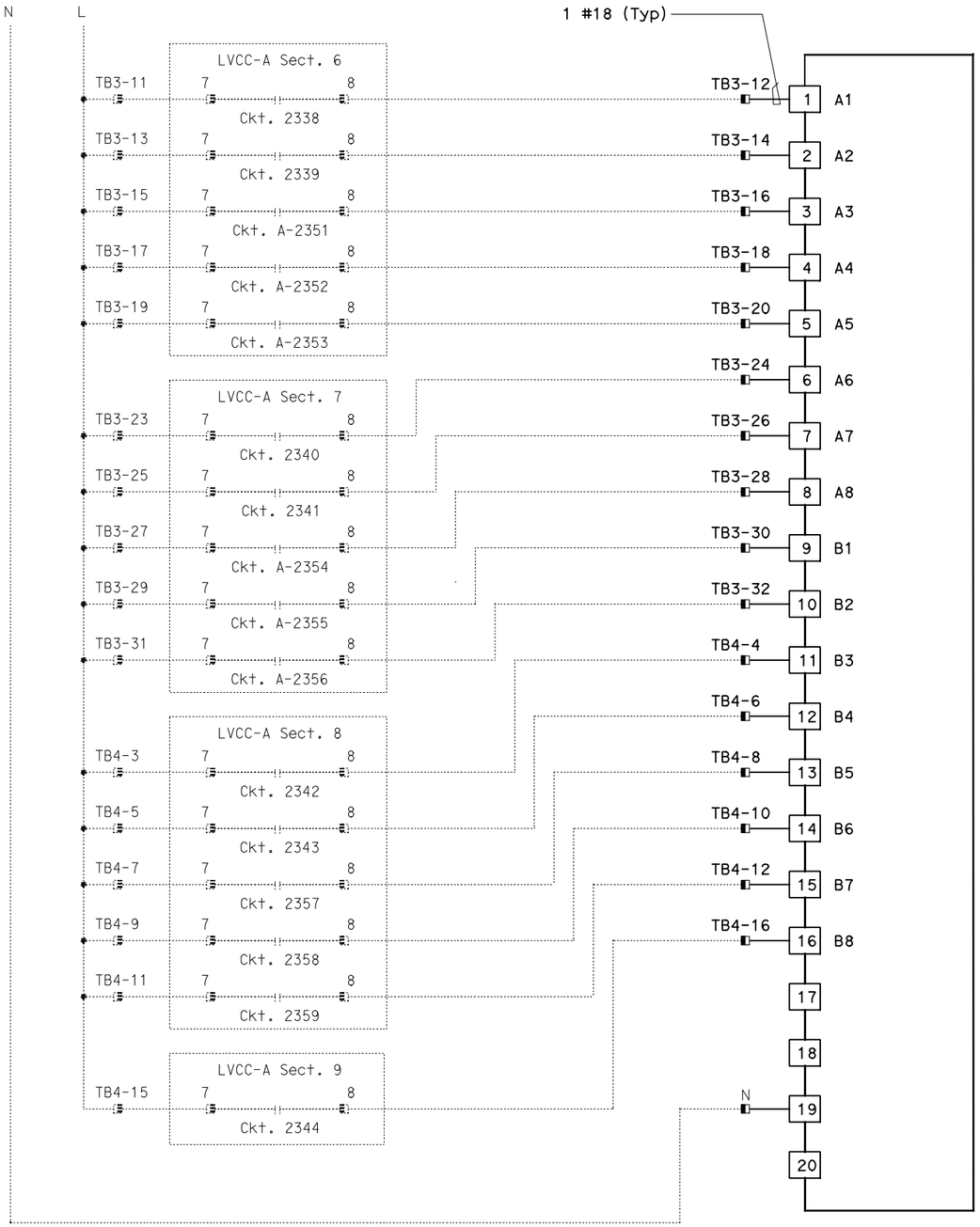

RTU #13E

16 POINT DIGITAL INPUT
RACK 1, SLOT 5

DIST	COUNTY	ROUTE	KILOMETER POST TOTAL PROJECT	SHEET No	TOTAL SHEETS
04	SF, Ala	80	12.2/14.3 0.0/4.0	407a 09S31	1204

Syn Yee Chin 03/08/10
REGISTERED ELECTRICAL ENGINEER DATE

REGISTERED PROFESSIONAL ENGINEER
SYN YEE CHIN
No. 18186
Exp. 09/30/2011
ELECTRICAL
STATE OF CALIFORNIA

05-06-2010
PLANS APPROVAL DATE

PB AMERICAS, Inc.
A Parsons Brinckerhoff Company
303 Second St., Suite 700N
San Francisco, CA 94107-1317

The State of California or its officers or agents shall not be responsible for the accuracy or completeness of electronic copies of this plan sheet.

Caltrans now has a web site! To get to the web site, go to http://www.dot.ca.gov

NOTES:

1. Contractor shall install input card. See sheet E-910 for location.
2. Contractor shall wire connection shown by bold lines.

REQUEST FOR INFORMATION NOT ADDRESSED IN THIS CCO REMAIN IN FORCE

MARK	DATE	DESCRIPTIONS	BY	CH'D	CCO#
		REVISIONS			
0	03/08/10	MEP INTEGRATION	JE	FW	110

CONTRACT CHANGE ORDER NO._____
SHEET _____ OF _____

DETAILS
SCADA REMOTE TERMINAL UNIT SYSTEM
RTU #13E WIRING DIAGRAM
NO SCALE

E-923

STATE OF CALIFORNIA - DEPARTMENT OF TRANSPORTATION
Caltrans
DESIGN OVERSIGHT
BEHZAD GOLEMOHAMMADI
CALCULATED/ DESIGNED BY
CHECKED BY
SYC FW
DATE 01/10 01/10
REVISED BY DATE REVISED

LAST REVISION 00-00-00
DATE PLOTTED => 06-MAY-2010
TIME PLOTTED => 19:08

THIS PLAN ACCURATE FOR ELECTRICAL WORK ONLY.

FOR REDUCED PLANS ORIGINAL SCALE IS IN MILLIMETERS 0 20 40 60 80

DGN FILE =>04-0120f1_E-923.dgn
USERNAME =>llorico

CU 04251

EA 0120F1

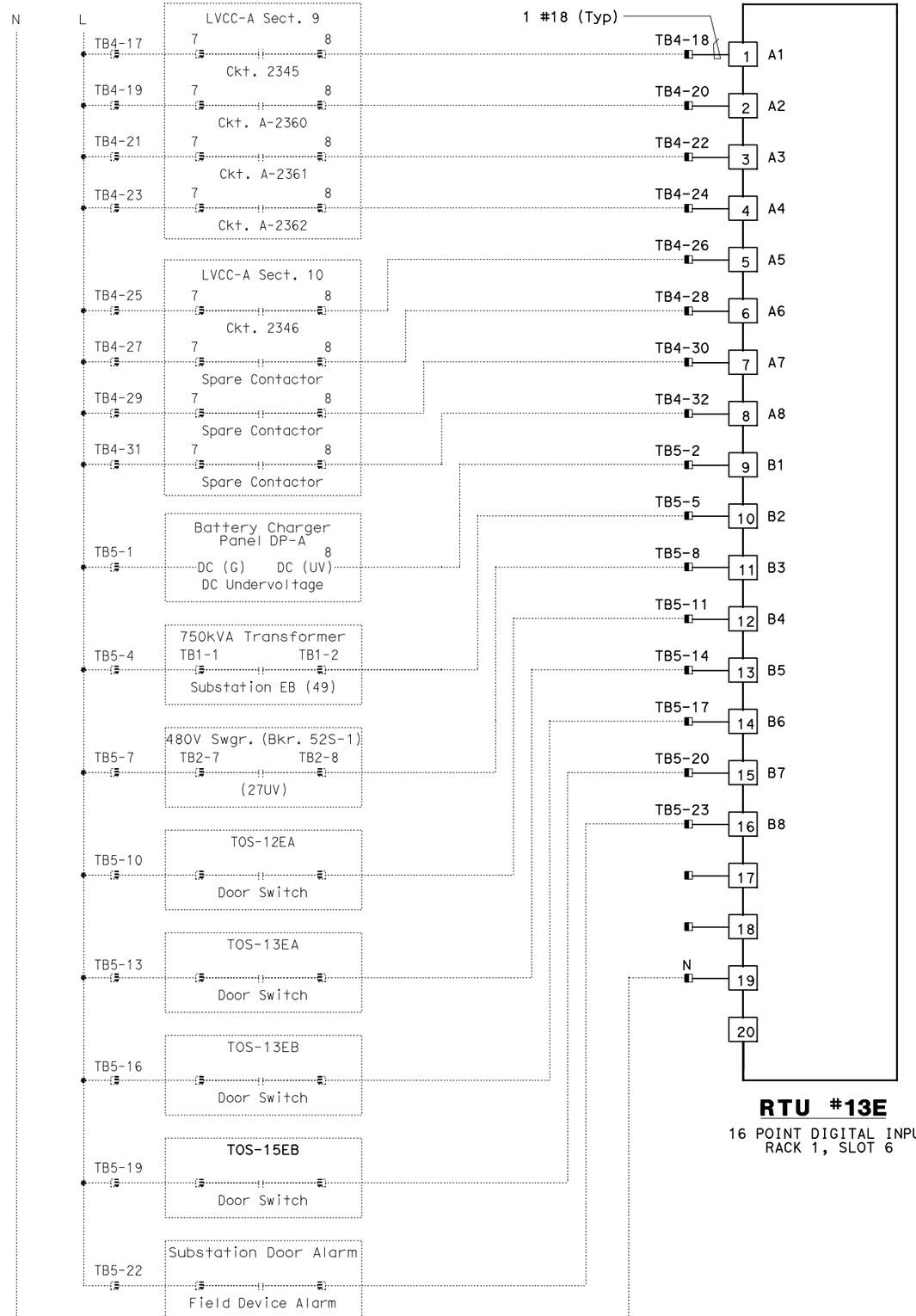

RTU #13E

16 POINT DIGITAL INPUT
RACK 1, SLOT 6

THIS PLAN ACCURATE FOR ELECTRICAL WORK ONLY.

DIST	COUNTY	ROUTE	KILOMETER POST TOTAL PROJECT	SHEET No	TOTAL SHEETS
04	SF,Ala	80	12.2/14.3 0.0/4.0	407a 09S32	1204

Syn Yee Chin 03/08/10
REGISTERED ELECTRICAL ENGINEER DATE

05-06-2010
PLANS APPROVAL DATE

REGISTERED PROFESSIONAL ENGINEER
SYN YEE CHIN
No. 18186
Exp. 09/30/2011
ELECTRICAL
STATE OF CALIFORNIA

PB AMERICAS, Inc.
A Parsons Brinckerhoff Company
303 Second St., Suite 700N
San Francisco, CA 94107-1317

The State of California or its officers or agents shall not be responsible for the accuracy or completeness of electronic copies of this plan sheet.

Caltrans now has a web site! To get to the web site, go to http://www.dot.ca.gov

NOTES:

1. Contractor shall install input card. See sheet E-910 for location.
2. Contractor shall wire connection shown by bold lines.

REQUEST FOR INFORMATION NOT ADDRESSED IN THIS CCO REMAIN IN FORCE

MARK	DATE	DESCRIPTIONS	BY	CH'D	CCO#
		REVISIONS			
0	03/08/10	MEP INTEGRATION	JE	FW	110

CONTRACT CHANGE ORDER NO._____
SHEET _____ OF _____

DETAILS
SCADA REMOTE TERMINAL UNIT SYSTEM
RTU #13E WIRING DIAGRAM
NO SCALE

E-924

DESIGN OVERSIGHT
BEHZAD GOLEMOHAMMADI

CALCULATED/DESIGNED BY
CHECKED BY

DATE 01/10 | REVISED BY | DATE REVISED
SYC | FW | 01/10

STATE OF CALIFORNIA - DEPARTMENT OF TRANSPORTATION
Caltrans

LAST REVISION 00-00-00
DATE PLOTTED => 06-MAY-2010
TIME PLOTTED => 19:08

FOR REDUCED PLANS ORIGINAL SCALE IS IN MILLIMETERS 0 20 40 60 80

DGN FILE =>04-0120f1_E-924.dgn
USERNAME =>llorico

CU 04251

EA 0120F1

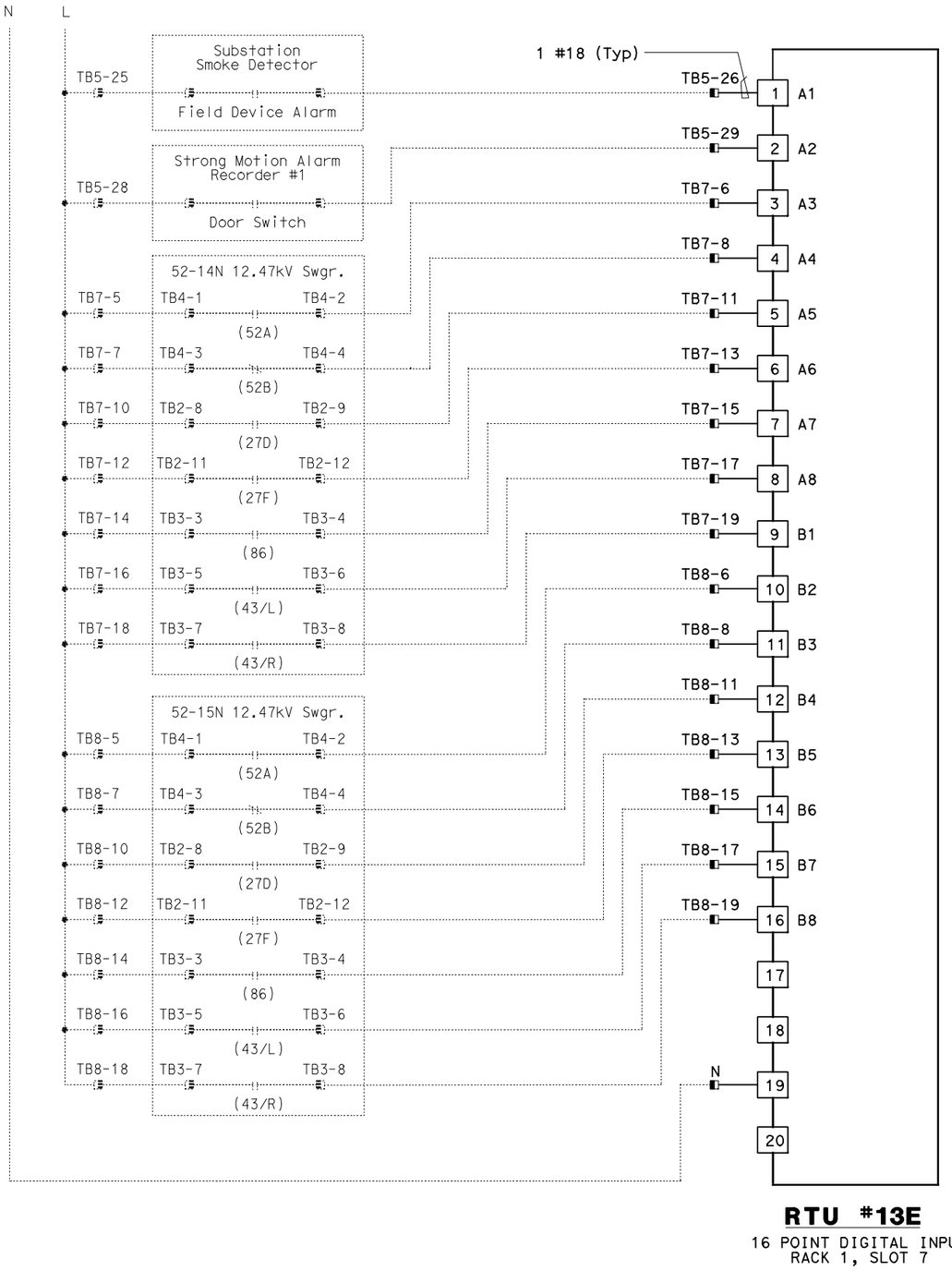

RTU #13E

16 POINT DIGITAL INPUT
RACK 1, SLOT 7

DIST	COUNTY	ROUTE	KILOMETER POST TOTAL PROJECT	SHEET No	TOTAL SHEETS
04	SF, Ala	80	12.2/14.3 0.0/4.0	407a 09S33	1204

Syn Yee Chin 03/08/10
REGISTERED ELECTRICAL ENGINEER DATE

REGISTERED PROFESSIONAL ENGINEER
SYN YEE CHIN
No. 18186
Exp. 09/30/2011
ELECTRICAL
STATE OF CALIFORNIA

05-06-2010
PLANS APPROVAL DATE

PB AMERICAS, Inc.
A Parsons Brinckerhoff Company
303 Second St., Suite 700N
San Francisco, CA 94107-1317

The State of California or its officers or agents shall not be responsible for the accuracy or completeness of electronic copies of this plan sheet.

Caltrans now has a web site! To get to the web site, go to http://www.dot.ca.gov

NOTES:

1. Contractor shall install input card. See sheet E-910 for location.
2. Contractor shall wire connection shown by bold lines.

REQUEST FOR INFORMATION NOT ADDRESSED IN THIS CCO REMAIN IN FORCE

MARK	DATE	REVISIONS	BY	CH'D	CCO#
0	03/08/10	MEP INTEGRATION	JE	FW	110

CONTRACT CHANGE ORDER NO._____
SHEET _____ OF _____

DETAILS
SCADA REMOTE TERMINAL UNIT SYSTEM
RTU #13E WIRING DIAGRAM

NO SCALE

E-925

CALCULATED/ DESIGNED BY	SYC	DATE 01/10	REVISED BY
CHECKED BY	FW	01/10	DATE REVISED

DESIGN OVERSIGHT
BEHZAD GOLEMOHAMMADI

STATE OF CALIFORNIA - DEPARTMENT OF TRANSPORTATION
Caltrans

THIS PLAN ACCURATE FOR ELECTRICAL WORK ONLY.

LAST REVISION 00-00-00
DATE PLOTTED => 06-MAY-2010
TIME PLOTTED => 19:08

FOR REDUCED PLANS ORIGINAL SCALE IS IN MILLIMETERS 0 20 40 60 80

DGN FILE =>04-0120f1_E-925.dgn
USERNAME =>llorico

CU 04251

EA 0120F1

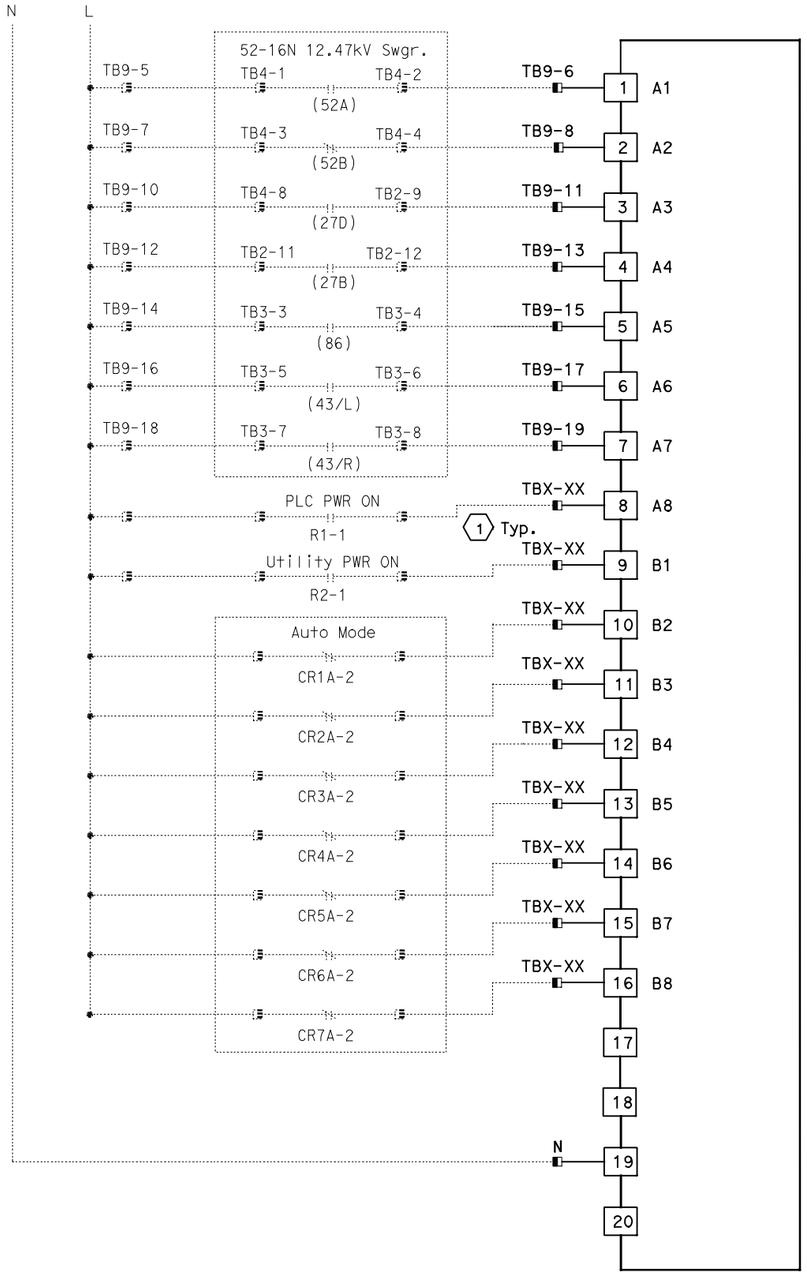

RTU #13E
16 POINT DIGITAL INPUT
RACK 1, SLOT 8

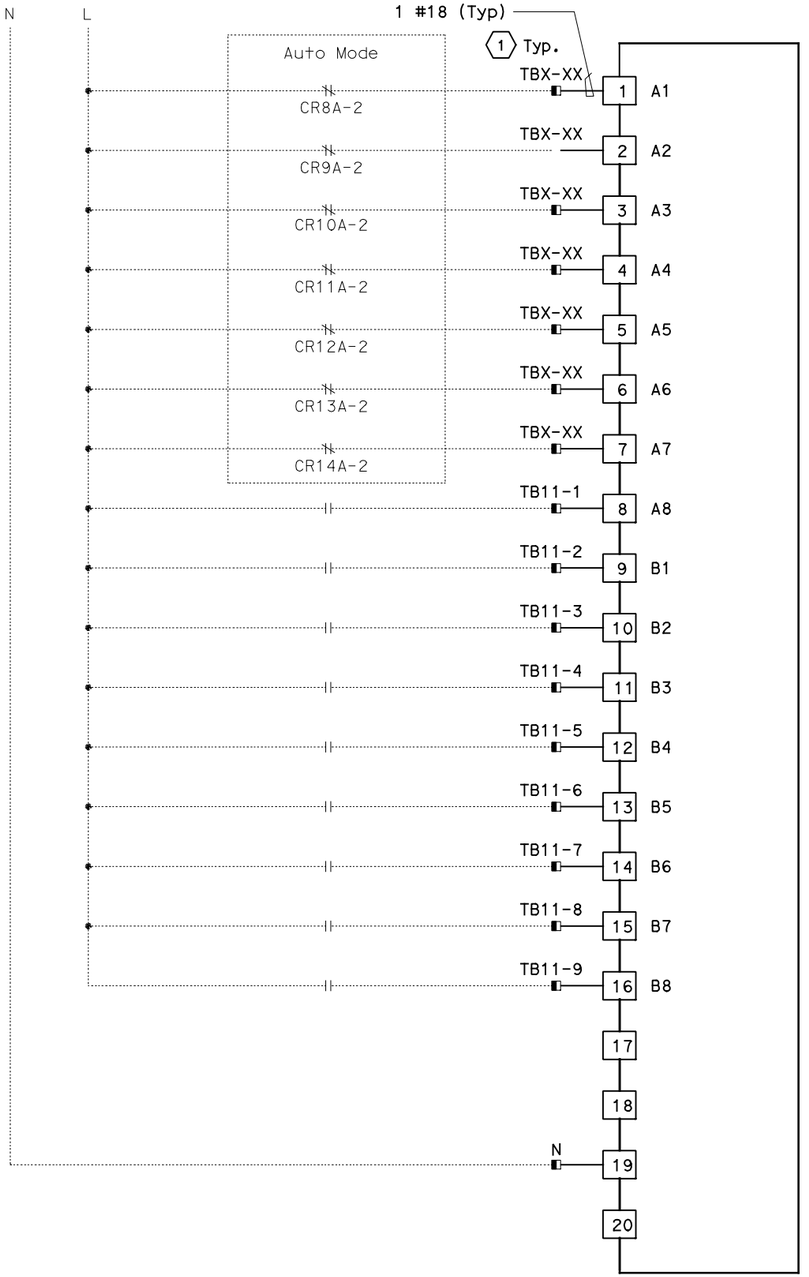

RTU #13E
16 POINT DIGITAL INPUT
RACK 1, SLOT 9

DIST	COUNTY	ROUTE	KILOMETER POST TOTAL PROJECT	SHEET No	TOTAL SHEETS
04	SF,Ala	80	12.2/14.3 0.0/4.0	407a 09S34	1204

Caltrans Metric

Syn Yee Chin 03/08/10
REGISTERED ELECTRICAL ENGINEER DATE

05-06-2010
PLANS APPROVAL DATE

REGISTERED PROFESSIONAL ENGINEER SYN YEE CHIN No. 18186 Exp. 09/30/2011 ELECTRICAL STATE OF CALIFORNIA

PB AMERICAS, Inc.
A Parsons Brinckerhoff Company
303 Second St., Suite 700N
San Francisco, CA 94107-1317

The State of California or its officers or agents shall not be responsible for the accuracy or completeness of electronic copies of this plan sheet.

Caltrans now has a web site! To get to the web site, go to http://www.dot.ca.gov

NOTES:

1. Contractor shall install input cards. See sheet E-910 for location.
2. Contractor shall wire connection shown by bold lines

SHEET NOTES:

1. Contractor to field verify the "TBX-XX" terminal block designations and equipment contact identification.

REQUEST FOR INFORMATION NOT ADDRESSED IN THIS CCO REMAIN IN FORCE

MARK	DATE	DESCRIPTIONS	BY	CH'D	CCO#
0	03/08/10	MEP INTEGRATION	JE	FW	110

REVISIONS

CONTRACT CHANGE ORDER NO._____
SHEET_____ OF _____

DETAILS
SCADA REMOTE TERMINAL UNIT SYSTEM
RTU #13E WIRING DIAGRAM
NO SCALE

E-926

STATE OF CALIFORNIA - DEPARTMENT OF TRANSPORTATION
Caltrans

DESIGN OVERSIGHT: BEHZAD GOLEMOHAMMADI
CALCULATED/DESIGNED BY: SYC DATE 01/10
CHECKED BY: FW 01/10
REVISED BY
DATE REVISED

THIS PLAN ACCURATE FOR ELECTRICAL WORK ONLY.

FOR REDUCED PLANS ORIGINAL SCALE IS IN MILLIMETERS 0 20 40 60 80

DGN FILE =>04-0120f1_E-926.dgn
USERNAME =>llorico

CU 04251 EA 0120F1

LAST REVISION 00-00-00
DATE PLOTTED => 06-MAY-2010
TIME PLOTTED => 19:08

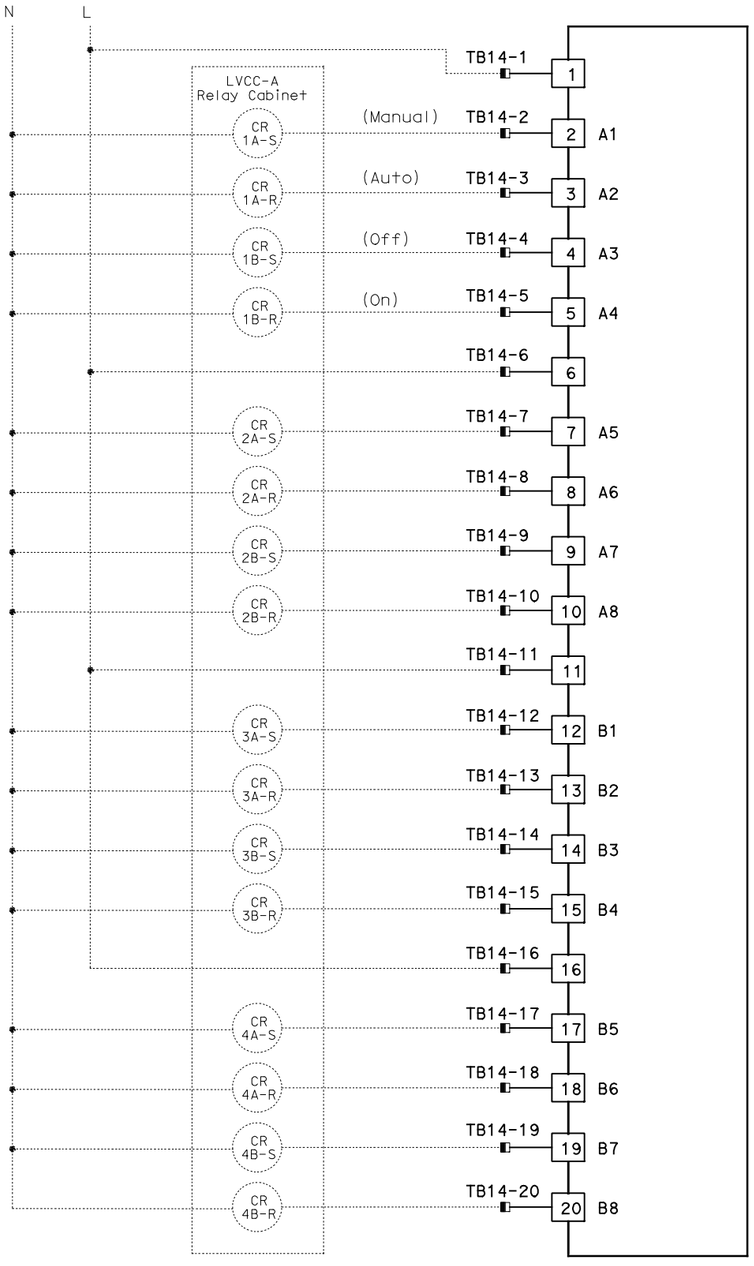

RTU #13E
16 POINT DIGITAL OUTPUT
RACK 2, SLOT 1

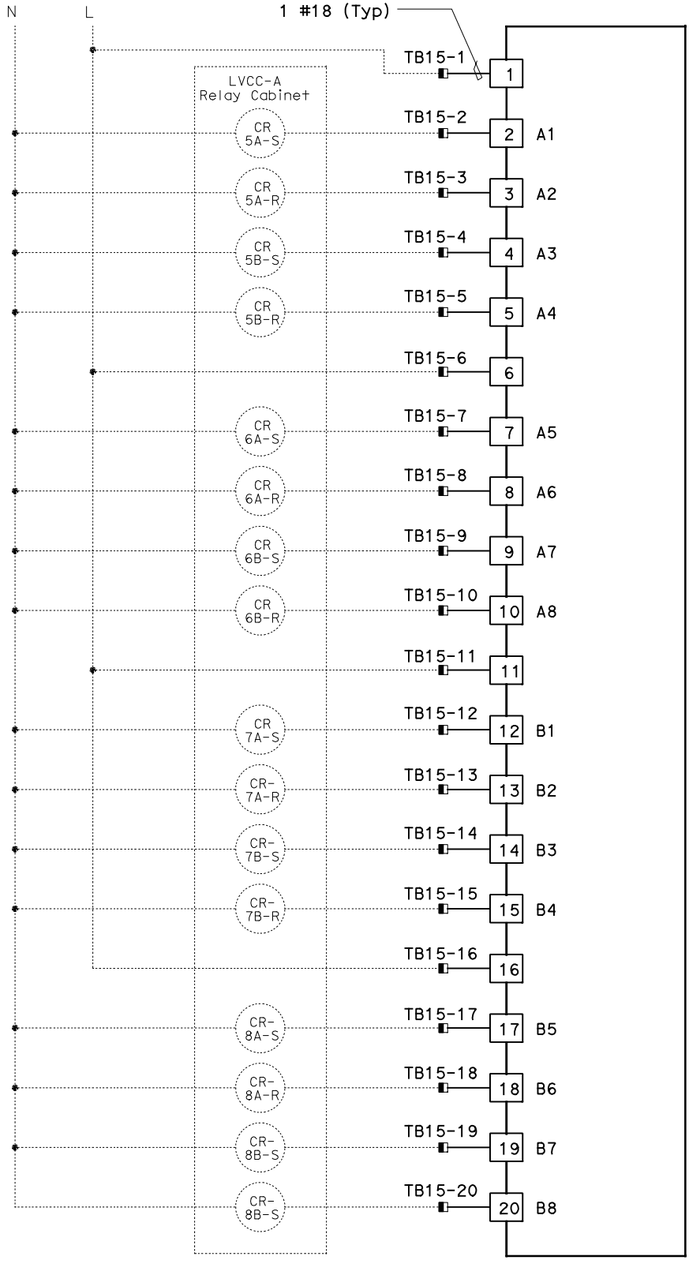

RTU #13E
16 POINT DIGITAL OUTPUT
RACK 2, SLOT 2

Caltrans Metric

DIST	COUNTY	ROUTE	KILOMETER POST TOTAL PROJECT	SHEET No	TOTAL SHEETS
04	SF,Ala	80	12.2/14.3 0.0/4.0	407a 09S35	1204

Syn Yee Chin 03/08/10
REGISTERED ELECTRICAL ENGINEER DATE

REGISTERED PROFESSIONAL ENGINEER
SYN YEE CHIN
No. 18186
Exp. 09/30/2011
ELECTRICAL
STATE OF CALIFORNIA

05-06-2010
PLANS APPROVAL DATE

PB AMERICAS, Inc.
A Parsons Brinckerhoff Company
303 Second St., Suite 700N
San Francisco, CA 94107-1317

The State of California or its officers or agents shall not be responsible for the accuracy or completeness of electronic copies of this plan sheet.

Caltrans now has a web site! To get to the web site, go to http://www.dot.ca.gov

NOTES:

1. Contractor shall install output cards. See sheet E-910 for location.
2. Contractor shall wire connection shown by bold lines

REQUEST FOR INFORMATION NOT ADDRESSED IN THIS CCO REMAIN IN FORCE

MARK	DATE	DESCRIPTIONS	BY	CH'D	CCO#
		REVISIONS			
0	03/08/10	MEP INTEGRATION	JE	FW	110

CONTRACT CHANGE ORDER NO._____
SHEET _____ OF _____

DETAILS
SCADA REMOTE TERMINAL UNIT SYSTEM
RTU #13E WIRING DIAGRAM
NO SCALE

E-927

CALCULATED/ DESIGNED BY	SYC	DATE 01/10	REVISED BY	DATE REVISED
CHECKED BY	FW	01/10		

DESIGN OVERSIGHT
BEHZAD GOLEMOHAMMADI

STATE OF CALIFORNIA - DEPARTMENT OF TRANSPORTATION
Caltrans

THIS PLAN ACCURATE FOR ELECTRICAL WORK ONLY.

LAST REVISION 00-00-00
DATE PLOTTED => 06-MAY-2010
TIME PLOTTED => 19:08

FOR REDUCED PLANS ORIGINAL SCALE IS IN MILLIMETERS 0 20 40 60 80

DGN FILE =>04-0120f1_E-927.dgn
USERNAME =>llorico

CU 04251

EA 0120F1

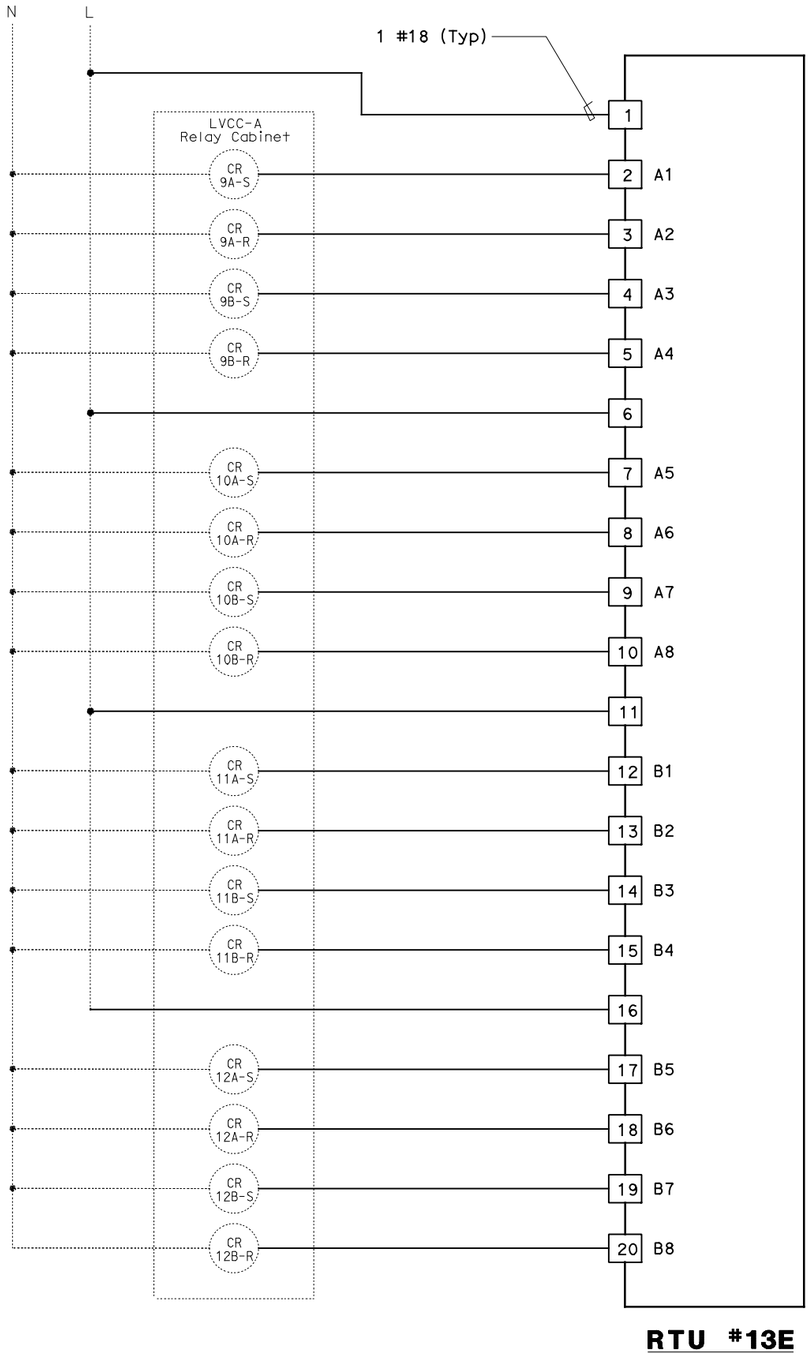

RTU #13E

16 POINT DIGITAL OUTPUT
RACK 2, SLOT 3

DIST	COUNTY	ROUTE	KILOMETER POST TOTAL PROJECT	SHEET No	TOTAL SHEETS
04	SF, Ala	80	12.2/14.3 0.0/4.0	407a 09S36	1204

Syn Yee Chin 03/08/10
REGISTERED ELECTRICAL ENGINEER DATE

05-06-2010
PLANS APPROVAL DATE

REGISTERED PROFESSIONAL ENGINEER
SYN YEE CHIN
No. 18186
Exp. 09/30/2011
ELECTRICAL
STATE OF CALIFORNIA

PB AMERICAS, Inc.
A Parsons Brinckerhoff Company
303 Second St., Suite 700N
San Francisco, CA 94107-1317

The State of California or its officers or agents shall not be responsible for the accuracy or completeness of electronic copies of this plan sheet.

Caltrans now has a web site! To get to the web site, go to http://www.dot.ca.gov

NOTES:

1. Contractor shall install output cards. See sheet E-910 for location.
2. Contractor shall wire connection shown by bold lines.

REQUEST FOR INFORMATION NOT ADDRESSED IN THIS CCO REMAIN IN FORCE

MARK	DATE	DESCRIPTIONS	BY	CH'D	CCO#
		REVISIONS			
0	03/08/10	MEP INTEGRATION	JE	FW	110

CONTRACT CHANGE ORDER NO._____
SHEET _____ OF _____

DETAILS
SCADA REMOTE TERMINAL UNIT SYSTEM
RTU #13E WIRING DIAGRAM

NO SCALE

E-928

DESIGN OVERSIGHT
BEHZAD GOLEMOHAMMADI

CALCULATED/DESIGNED BY
CHECKED BY

REVISED BY	DATE	SYC
DATE REVISED	01/10	FW

STATE OF CALIFORNIA - DEPARTMENT OF TRANSPORTATION
Caltrans

THIS PLAN ACCURATE FOR ELECTRICAL WORK ONLY.

LAST REVISION 00-00-00
DATE PLOTTED => 06-MAY-2010
TIME PLOTTED => 19:08

FOR REDUCED PLANS ORIGINAL SCALE IS IN MILLIMETERS 0 20 40 60 80

DGN FILE =>04-0120f1_E-928.dgn
USERNAME =>llorico

CU 04251

EA 0120F1

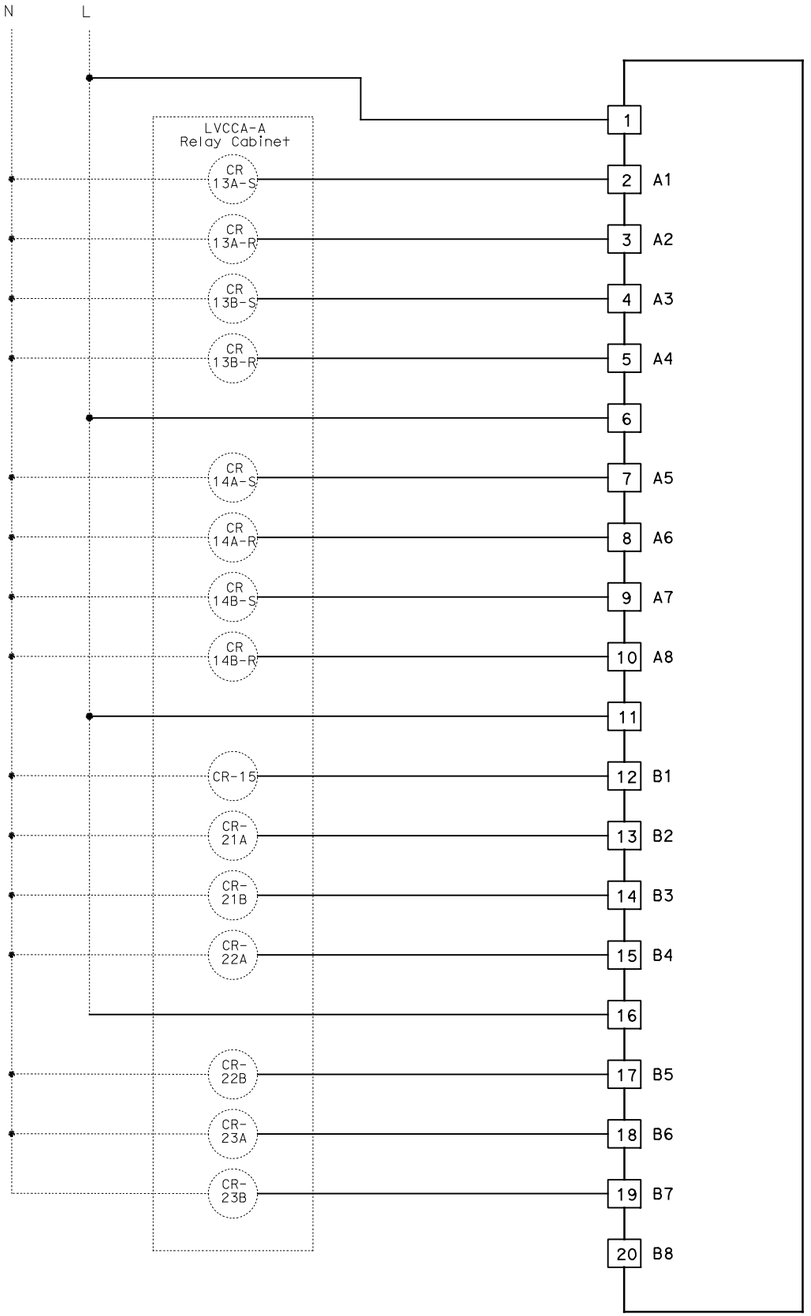

RTU #13E

16 POINT DIGITAL OUTPUT
RACK 2, SLOT 4

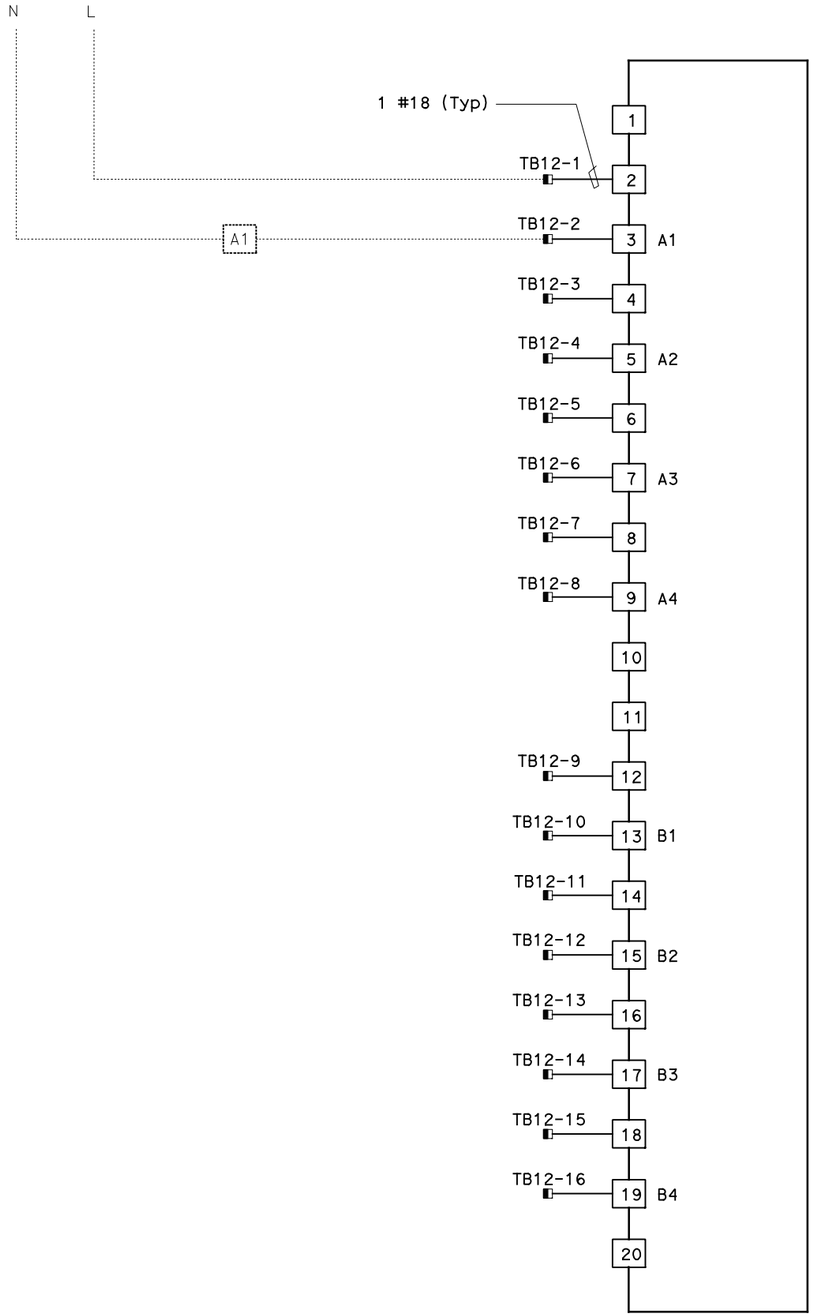

RTU #13E

16 POINT DIGITAL OUTPUT
RACK 2, SLOT 5

DIST	COUNTY	ROUTE	KILOMETER POST TOTAL PROJECT	SHEET No	TOTAL SHEETS
04	SF,Ala	80	12.2/14.3 0.0/4.0	407a 09S37	1204

Syn Yee Chin 03/08/10
REGISTERED ELECTRICAL ENGINEER DATE

REGISTERED PROFESSIONAL ENGINEER
SYN YEE CHIN
No. 18186
Exp. 09/30/2011
ELECTRICAL
STATE OF CALIFORNIA

05-06-2010
PLANS APPROVAL DATE

PB AMERICAS, Inc.
A Parsons Brinckerhoff Company
303 Second St., Suite 700N
San Francisco, CA 94107-1317

The State of California or its officers or agents shall not be responsible for the accuracy or completeness of electronic copies of this plan sheet.

Caltrans now has a web site! To get to the web site, go to http://www.dot.ca.gov

NOTES:

1. Contractor shall install output cards. See sheet E-910 for location.
2. Contractor shall wire connection shown by bold lines.

REQUEST FOR INFORMATION NOT ADDRESSED IN THIS CCO REMAIN IN FORCE

MARK	DATE	DESCRIPTIONS	BY	CH'D	CCO#
		REVISIONS			
0	03/08/10	MEP INTEGRATION	JE	FW	110

CONTRACT CHANGE ORDER NO._____
SHEET _____ OF _____

DETAILS
SCADA REMOTE TERMINAL UNIT SYSTEM
RTU #13E WIRING DIAGRAM

NO SCALE

E-929

THIS PLAN ACCURATE FOR ELECTRICAL WORK ONLY.

DESIGN OVERSIGHT	CALCULATED/ DESIGNED BY	DATE 01/10	REVISED BY	DATE REVISED
BEHZAD GOLEMOHAMMADI	CHECKED BY	SYC FW	01/10	

STATE OF CALIFORNIA - DEPARTMENT OF TRANSPORTATION
Caltrans

LAST REVISION 00-00-00 DATE PLOTTED => 06-MAY-2010 TIME PLOTTED => 19:08

FOR REDUCED PLANS ORIGINAL SCALE IS IN MILLIMETERS 0 20 40 60 80

DGN FILE =>04-0120f1_E-929.dgn
USERNAME =>llorico

CU 04251

EA 0120F1

NOTES:

1. This plan sheet is a record drawing of the Skyway Structures Remote Terminal Unit #13E. The contractor shall verify the existing installation. See sheet EE-357 from the Skyway Structures, Contract No. 04-012024.

2. References:
   Refer to sheet E-921.

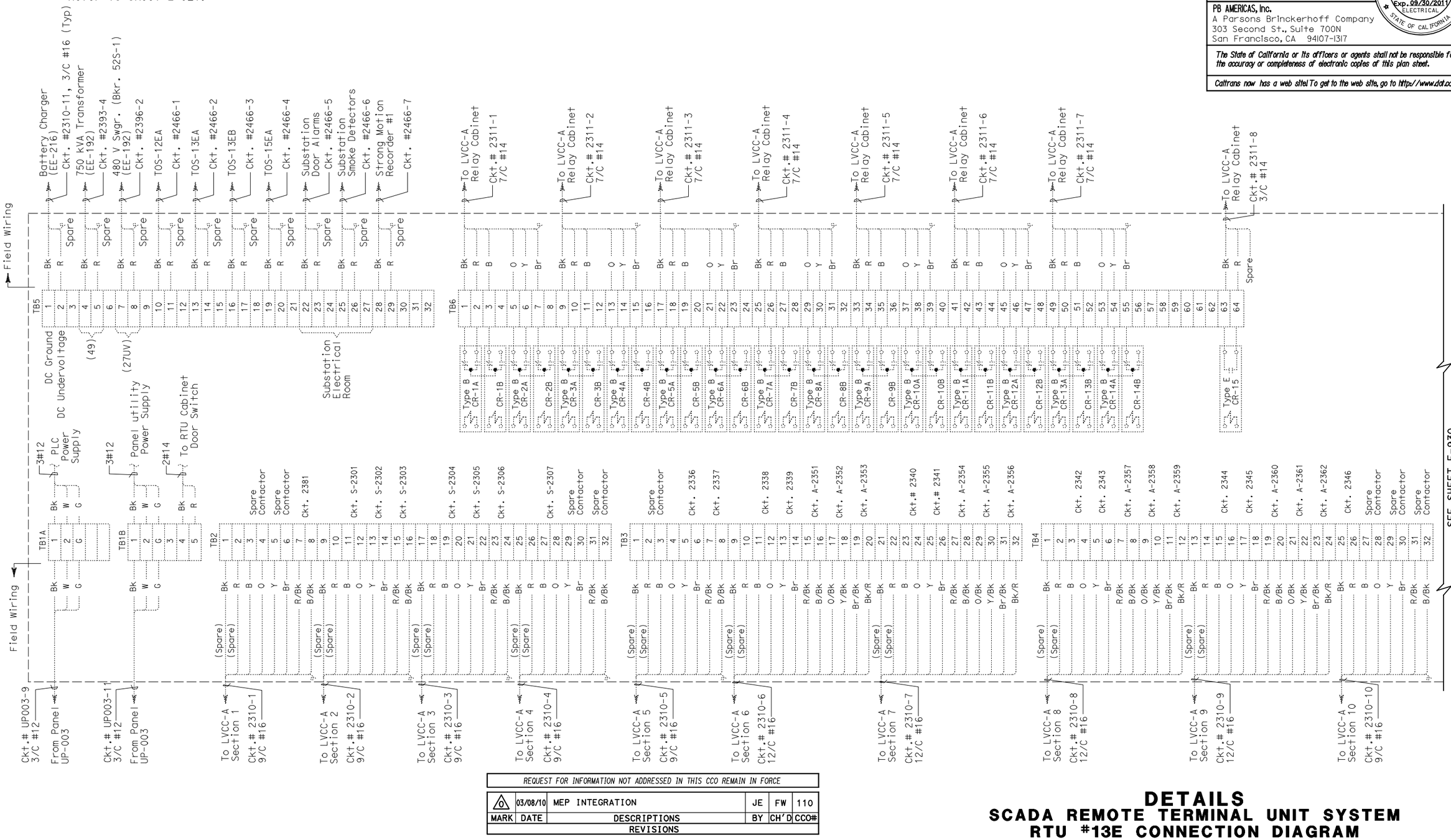

SEE SHEET E-930
CONNECTION DIAGRAM - RTU #13E

DIST	COUNTY	ROUTE	KILOMETER POST TOTAL PROJECT	SHEET No	TOTAL SHEETS
04	SF,Ala	80	12.2/14.3 0.0/4.0	407a 09S38	1204

Syn Yee Chin 03/08/10
REGISTERED ELECTRICAL ENGINEER DATE

SYN YEE CHIN No. 18186 Exp. 09/30/2011 ELECTRICAL — REGISTERED PROFESSIONAL ENGINEER — STATE OF CALIFORNIA

05-06-2010
PLANS APPROVAL DATE

PB AMERICAS, Inc.
A Parsons Brinckerhoff Company
303 Second St., Suite 700N
San Francisco, CA 94107-1317

The State of California or its officers or agents shall not be responsible for the accuracy or completeness of electronic copies of this plan sheet.

Caltrans now has a web site! To get to the web site, go to http://www.dot.ca.gov

MARK	DATE	DESCRIPTIONS	BY	CH'D	CCO#
		REVISIONS			
0	03/08/10	MEP INTEGRATION	JE	FW	110

REQUEST FOR INFORMATION NOT ADDRESSED IN THIS CCO REMAIN IN FORCE

CONTRACT CHANGE ORDER NO._____
SHEET _____ OF _____

DETAILS
SCADA REMOTE TERMINAL UNIT SYSTEM
RTU #13E CONNECTION DIAGRAM
NO SCALE

E-929A

	CALCULATED/ DESIGNED BY	SYC	DATE 01/10	REVISED BY
STATE OF CALIFORNIA - DEPARTMENT OF TRANSPORTATION	CHECKED BY	FW	01/10	DATE REVISED
Caltrans				
DESIGN OVERSIGHT				
BEHZAD GOLEMOHAMMADI				

LAST REVISION 00-00-00
DATE PLOTTED => 06-MAY-2010
TIME PLOTTED => 19:08

THIS PLAN ACCURATE FOR ELECTRICAL WORK ONLY.

FOR REDUCED PLANS ORIGINAL SCALE IS IN MILLIMETERS 0 20 40 60 80

DGN FILE =>04-0120f1_E-929A.dgn
USERNAME =>llorico

CU 04251

EA 0120F1

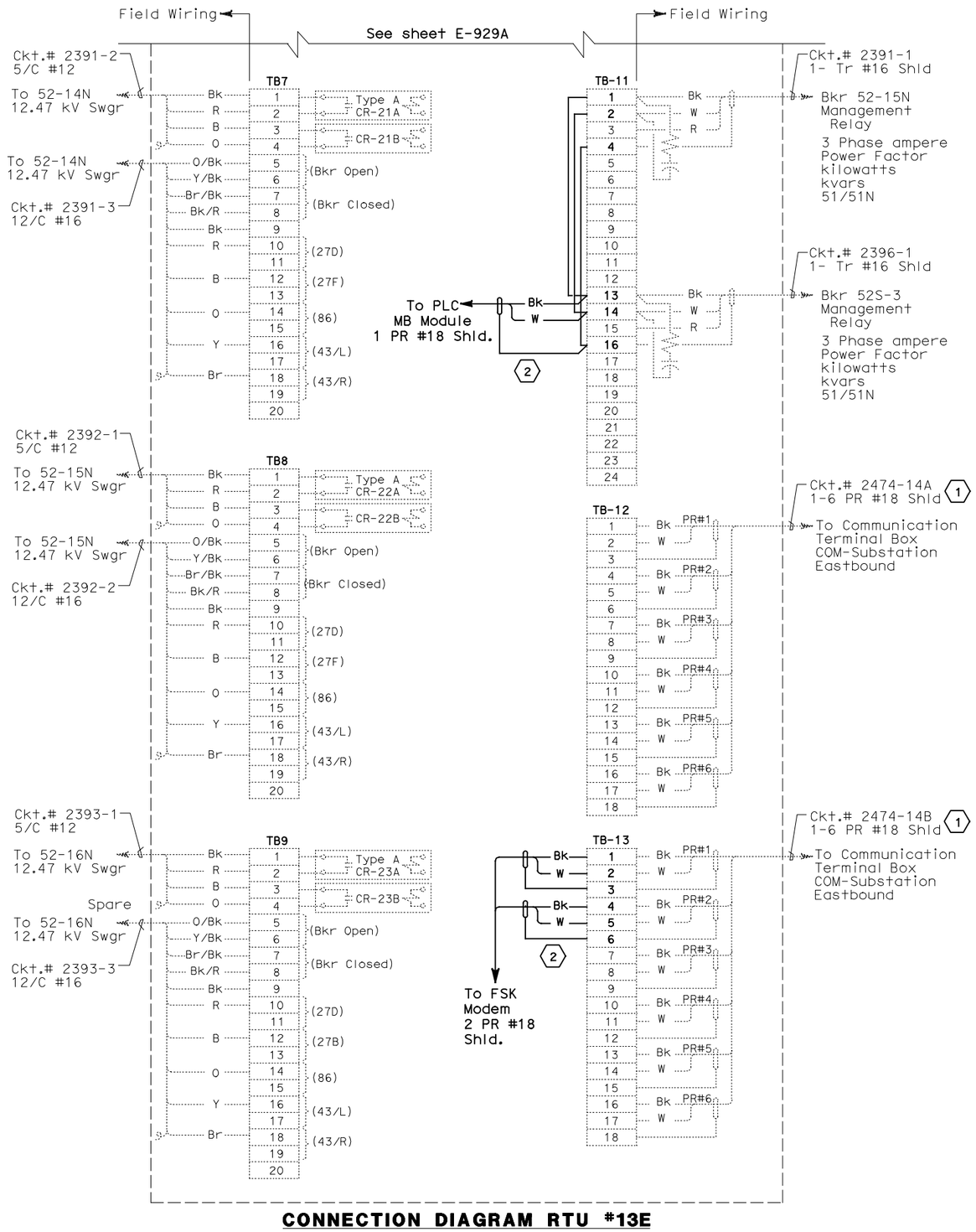

CONNECTION DIAGRAM RTU #13E

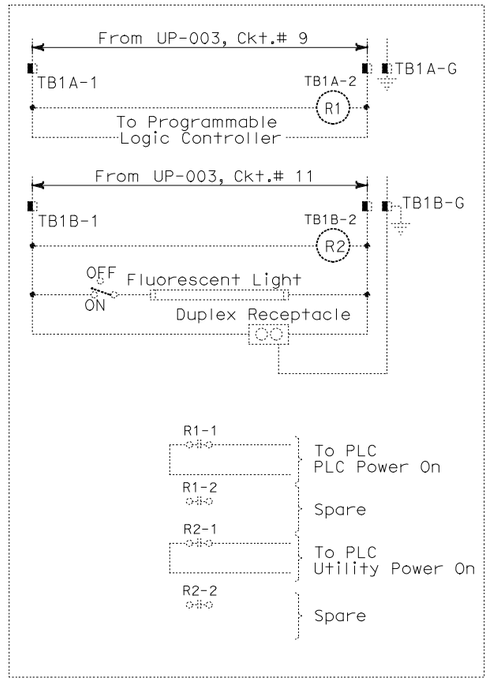

ELEMENTARY DIAGRAM - RTU #13E

DIST	COUNTY	ROUTE	KILOMETER POST TOTAL PROJECT	SHEET No	TOTAL SHEETS
04	SF,Ala	80	12.2/14.3 0.0/4.0	407a 09S39	1204

Syn Yee Chin 03/08/10
REGISTERED ELECTRICAL ENGINEER DATE

05-06-2010
PLANS APPROVAL DATE

REGISTERED PROFESSIONAL ENGINEER
SYN YEE CHIN
No. 18186
Exp. 09/30/2011
ELECTRICAL
STATE OF CALIFORNIA

PB AMERICAS, Inc.
A Parsons Brinckerhoff Company
303 Second St., Suite 700N
San Francisco, CA 94107-1317

The State of California or its officers or agents shall not be responsible for the accuracy or completeness of electronic copies of this plan sheet.

Caltrans now has a web site! To get to the web site, go to http://www.dot.ca.gov

NOTES:

1. This plan sheet is a record drawing of the Skyway Structures Remote Terminal Unit No. 13E. The Contractor shall verify the existing installation. See sheet EE-358 from the Skyway Structures, contract No. 04-012024.
2. References:
   Refer to Sheet E-921.
3. Contractor shall wire connection shown by bold lines.

SHEET NOTES:

(1) Verify that the shield is not grounded.
(2) Do not ground shield.

REQUEST FOR INFORMATION NOT ADDRESSED IN THIS CCO REMAIN IN FORCE

MARK	DATE	REVISIONS	BY	CH'D	CCO#
0	03/08/10	MEP INTEGRATION	JE	FW	110

CONTRACT CHANGE ORDER NO._____
SHEET _____ OF _____

DETAILS
SCADA REMOTE TERMINAL UNIT SYSTEM
RTU #13E ELEMENTARY AND CONNECTION DIAGRAMS

NO SCALE

E-930

STATE OF CALIFORNIA - DEPARTMENT OF TRANSPORTATION
Caltrans
DESIGN OVERSIGHT
BEHZAD GOLEMOHAMMADI
CALCULATED/DESIGNED BY
CHECKED BY
SYC FW
DATE 01/10 01/10
REVISED BY DATE REVISED

THIS PLAN ACCURATE FOR ELECTRICAL WORK ONLY.

FOR REDUCED PLANS ORIGINAL SCALE IS IN MILLIMETERS 0 20 40 60 80

DGN FILE =>04-0120f1_E-930.dgn
USERNAME =>llorico

CU 04251

EA 0120F1

DATE PLOTTED => 06-MAY-2010
TIME PLOTTED => 19:08
LAST REVISION 00-00-00

DIST	COUNTY	ROUTE	KILOMETER POST TOTAL PROJECT	SHEET No	TOTAL SHEETS
04	SF,Ala	80	12.2/14.3 0.0/4.0	407a 09S40	1204

Caltrans Metric

Syn Yee Chin 03/08/10
REGISTERED ELECTRICAL ENGINEER DATE

05-06-2010
PLANS APPROVAL DATE

REGISTERED PROFESSIONAL ENGINEER SYN YEE CHIN No. 18186 Exp. 09/30/2011 ELECTRICAL STATE OF CALIFORNIA

PB AMERICAS, Inc.
A Parsons Brinckerhoff Company
303 Second St., Suite 700N
San Francisco, CA 94107-1317

The State of California or its officers or agents shall not be responsible for the accuracy or completeness of electronic copies of this plan sheet.

Caltrans now has a web site! To get to the web site, go to http://www.dot.ca.gov

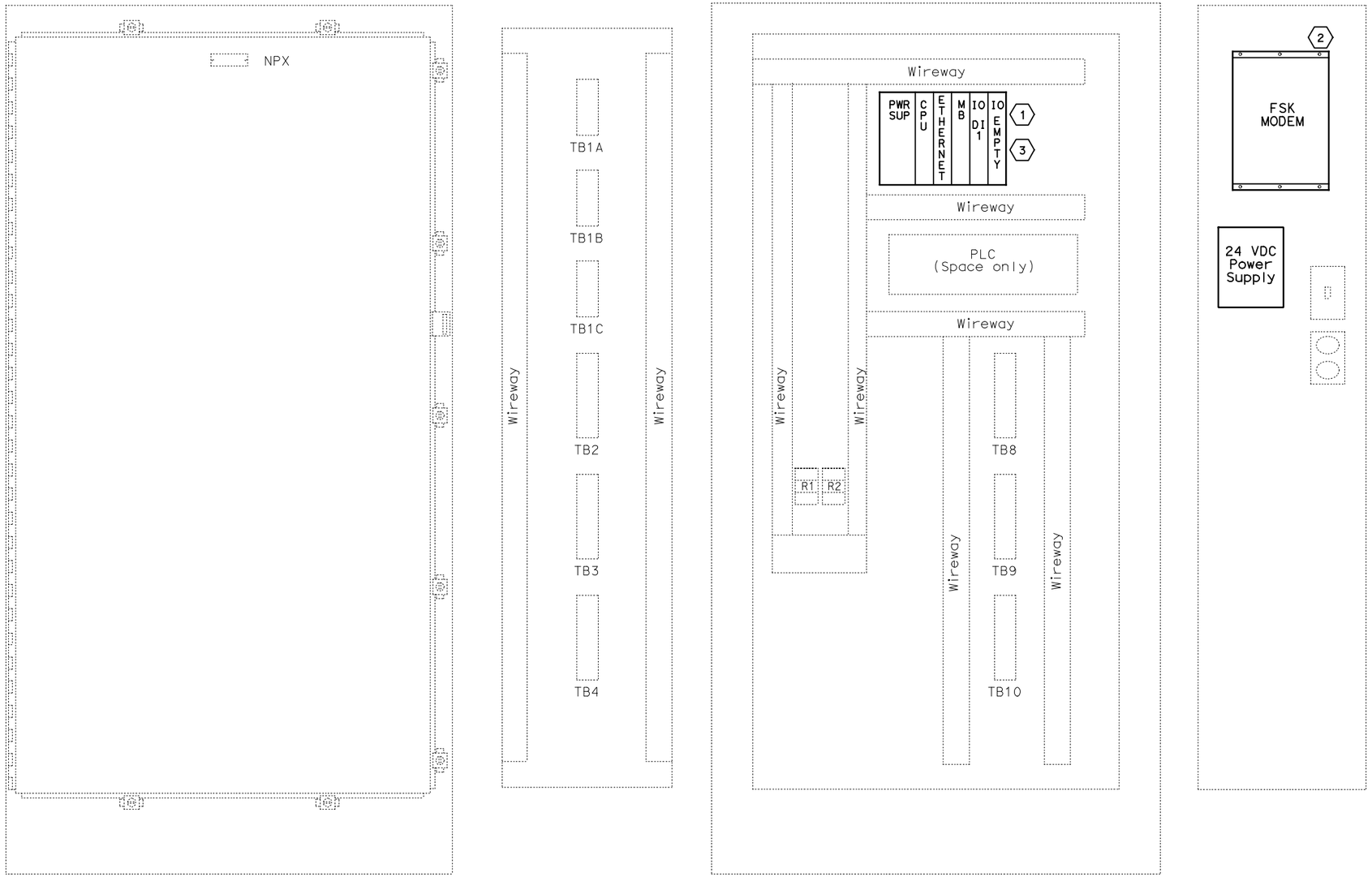

EXTERIOR **INTERIOR**

NOTES:

1. Refer to the special provisions for the PLC and FSK Modem requirements.
2. For RTU wiring see following sheets:
   - RTU #14W - Sheet E-932,933.
   - RTU #14E - Sheet E-934,935.
   - RTU #15W - Sheet E-936,937.
   - RTU #15E - Sheet E-938,939.

SHEET NOTES:

1. Contractor shall furnish and install a new GE Fanuc PAC Systems RX3i PLC in the existing RTU.
2. Contractor shall furnish and install a new Frequency Shift Key (FSK) modem and 120v (AC) to 21v-28v (DC) power supply in the existing RTU.
3. Contractor shall install the input and output cards.

REQUEST FOR INFORMATION NOT ADDRESSED IN THIS CCO REMAIN IN FORCE

MARK	DATE	DESCRIPTIONS	BY	CH'D	CCO#
0	03/08/10	MEP INTEGRATION	JE	FW	110

REVISIONS

CONTRACT CHANGE ORDER NO._____
SHEET _____ OF _____

DETAILS
SCADA REMOTE TERMINAL UNIT SYSTEM
RTU #14W,14E,15W, AND 15E ASSEMBLY
NO SCALE

E-931

STATE OF CALIFORNIA - DEPARTMENT OF TRANSPORTATION
Caltrans

DESIGN OVERSIGHT: BEHZAD GOLEMOHAMMADI
CALCULATED/DESIGNED BY: SYC DATE 01/10
CHECKED BY: FW 01/10
REVISED BY
DATE REVISED

THIS PLAN ACCURATE FOR ELECTRICAL WORK ONLY.

FOR REDUCED PLANS ORIGINAL SCALE IS IN MILLIMETERS 0 20 40 60 80

DGN FILE =>04-0120f1_E-931.dgn
USERNAME =>llorico

CU 04251 EA 0120F1

LAST REVISION 00-00-00
DATE PLOTTED => 06-MAY-2010
TIME PLOTTED => 19:08

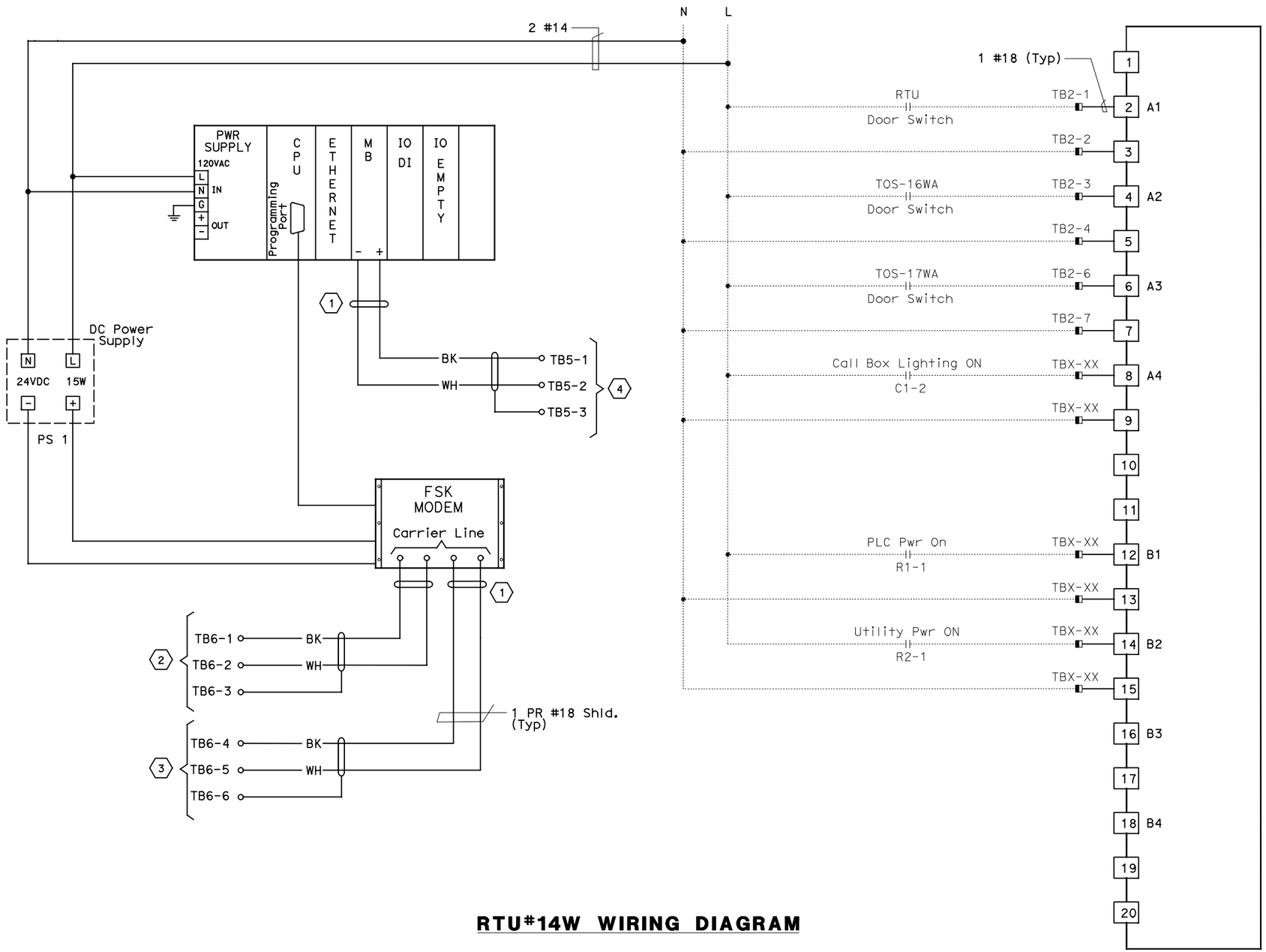

RTU#14W WIRING DIAGRAM

RTU #14W
8 POINT DIGITAL INPUT
RACK 1, SLOT 4

DIST	COUNTY	ROUTE	KILOMETER POST TOTAL PROJECT	SHEET No	TOTAL SHEETS
04	SF,Ala	80	12.2/14.3 0.0/4.0	407a 09S41	1204

Syn Yee Chin 03/08/10
REGISTERED ELECTRICAL ENGINEER DATE

05-06-2010
PLANS APPROVAL DATE

REGISTERED PROFESSIONAL ENGINEER
SYN YEE CHIN
No. 18186
Exp. 09/30/2011
ELECTRICAL
STATE OF CALIFORNIA

PB AMERICAS, Inc.
A Parsons Brinckerhoff Company
303 Second St., Suite 700N
San Francisco, CA 94107-1317

The State of California or its officers or agents shall not be responsible for the accuracy or completeness of electronic copies of this plan sheet.

Caltrans now has a web site! To get to the web site, go to http://www.dot.ca.gov

NOTES:

1. For FSK Modems interconnect wiring, see sheet E-902.
2. References: See sheet E-933.
3. Contractor shall install input card. See sheet E-931 for location.
4. Contractor shall wire connection shown by bold lines.

SHEET NOTES:

(1) Contractor to tape shield. This circuit is not to be grounded at this end.
(2) Pair 1 of 50 pair SCADA cable.
(3) Pair 2 of 50 pair SCADA cable.
(4) To Call Box Communications cable RS-485.

REQUEST FOR INFORMATION NOT ADDRESSED IN THIS CCO REMAIN IN FORCE

MARK	DATE	DESCRIPTIONS	BY	CH'D	CCO#
		REVISIONS			
0	03/08/10	MEP INTEGRATION	JE	FW	110

CONTRACT CHANGE ORDER NO._____
SHEET _____ OF _____

DETAILS
SCADA REMOTE TERMINAL UNIT SYSTEM
RTU #14W WIRING DIAGRAMS
NO SCALE

E-932

DESIGN OVERSIGHT
BEHZAD GOLEMOHAMMADI
CALCULATED/DESIGNED BY
CHECKED BY
DATE 01/10 SYC FW
REVISED BY DATE REVISED
STATE OF CALIFORNIA - DEPARTMENT OF TRANSPORTATION
Caltrans

THIS PLAN ACCURATE FOR ELECTRICAL WORK ONLY.

FOR REDUCED PLANS ORIGINAL SCALE IS IN MILLIMETERS 0 20 40 60 80

DGN FILE =>04-0120f1_E-932.dgn
USERNAME =>llorico

CU 04251 EA 0120F1

LAST REVISION 00-00-00
DATE PLOTTED => 06-MAY-2010
TIME PLOTTED => 19:08

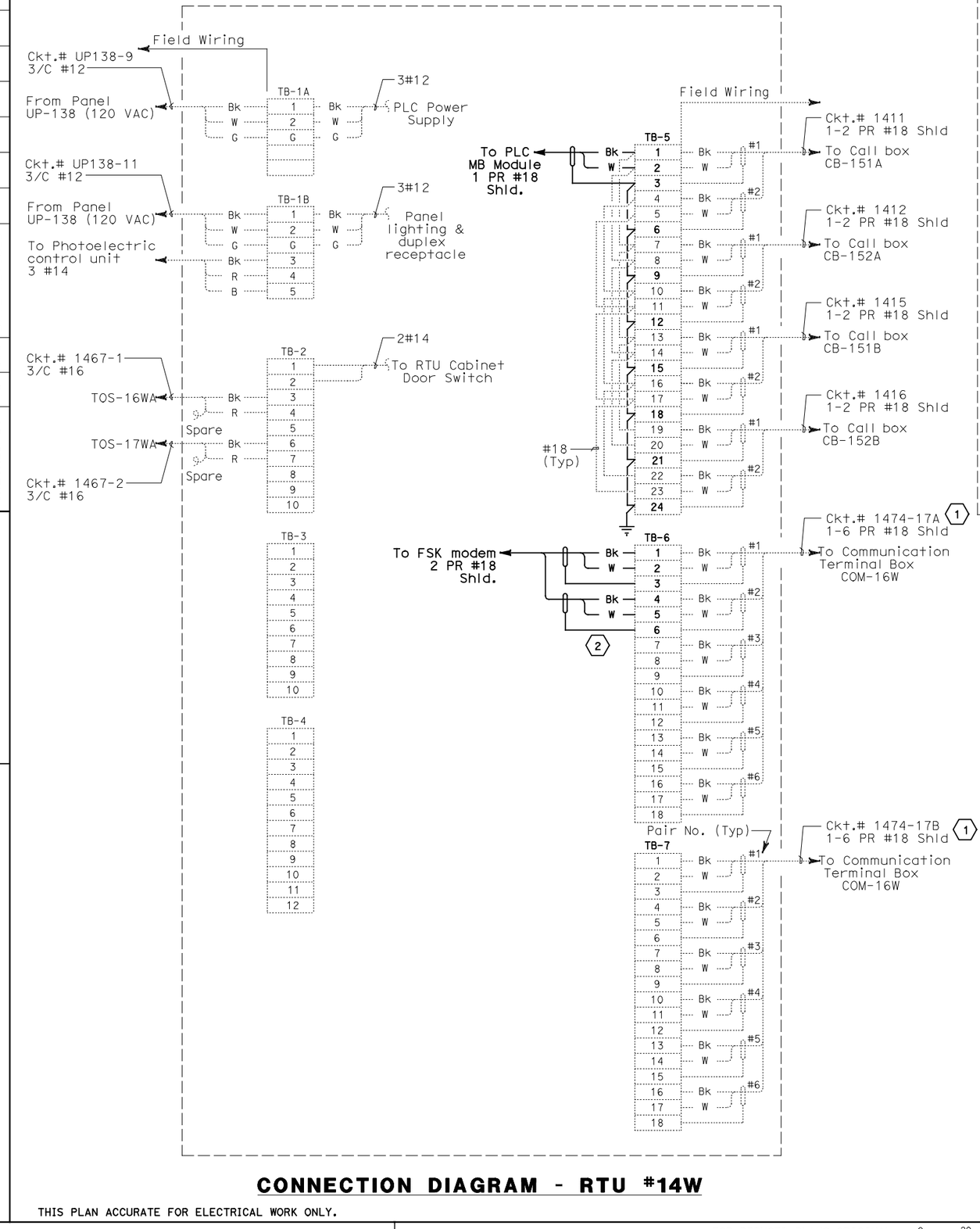

CONNECTION DIAGRAM - RTU #14W

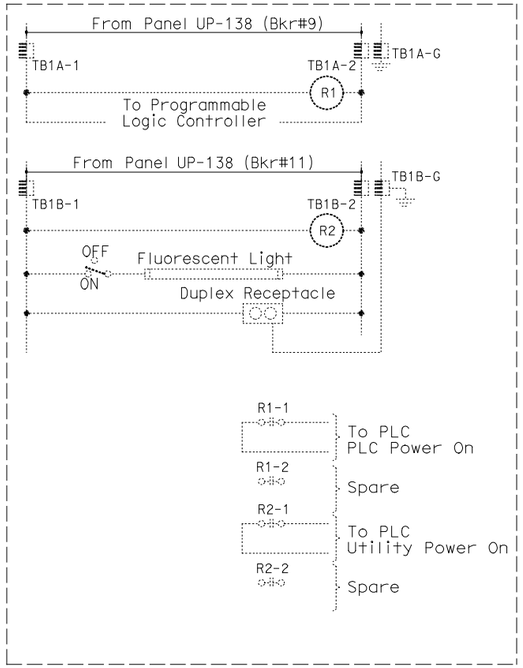

ELEMENTARY DIAGRAM - RTU#14W

Caltrans Metric

DIST	COUNTY	ROUTE	KILOMETER POST TOTAL PROJECT	SHEET No	TOTAL SHEETS
04	SF,Ala	80	12.2/14.3 0.0/4.0	407a 09S42	1204

Syn Yee Chin 03/08/10
REGISTERED ELECTRICAL ENGINEER DATE

REGISTERED PROFESSIONAL ENGINEER
SYN YEE CHIN
No. 18186
Exp. 09/30/2011
ELECTRICAL
STATE OF CALIFORNIA

05-06-2010
PLANS APPROVAL DATE

PB AMERICAS, Inc.
A Parsons Brinckerhoff Company
303 Second St., Suite 700N
San Francisco, CA 94107-1317

The State of California or its officers or agents shall not be responsible for the accuracy or completeness of electronic copies of this plan sheet.

Caltrans now has a web site! To get to the web site, go to http://www.dot.ca.gov

NOTES:

1. This Plan Sheet is a record drawing of the Skyway Structures Remote Terminal Unit No. 14W. The Contractor shall verify the existing installation. See sheet EE-352 from the Skyway Structures, contract No. 04-012024.
2. References:
   See sheet E-932.
3. Contractor shall wire connection shown by bold lines.

SHEET NOTES:

(1) Verify that shield is not grounded.

(2) Do not ground the shield.

REQUEST FOR INFORMATION NOT ADDRESSED IN THIS CCO REMAIN IN FORCE

MARK	DATE	DESCRIPTIONS	BY	CH'D	CCO#
		REVISIONS			
0	03/08/10	MEP INTEGRATION	JE	FW	110

CONTRACT CHANGE ORDER NO._____
SHEET _____ OF _____

DETAILS
SCADA REMOTE TERMINAL UNIT SYSTEM
RTU #14W ELEMENTARY AND CONNECTION DIAGRAMS

NO SCALE

E-933

STATE OF CALIFORNIA - DEPARTMENT OF TRANSPORTATION
Caltrans
DESIGN OVERSIGHT
BEHZAD GOLEMOHAMMADI

DATE	REVISED BY	DATE REVISED
01/10	FW	01/10

CALCULATED/DESIGNED BY
CHECKED BY
SYC

THIS PLAN ACCURATE FOR ELECTRICAL WORK ONLY.

FOR REDUCED PLANS ORIGINAL SCALE IS IN MILLIMETERS 0 20 40 60 80

DGN FILE =>04-0120f1_E-933.dgn
USERNAME =>llorico

CU 04251

EA 0120F1

LAST REVISION 00-00-00
DATE PLOTTED => 06-MAY-2010
TIME PLOTTED => 19:09

DIST	COUNTY	ROUTE	KILOMETER POST TOTAL PROJECT	SHEET No	TOTAL SHEETS
04	SF,Ala	80	12.2/14.3 0.0/4.0	407a 09S43	1204

Caltrans Metric

Syn Yee Chin 03/08/10
REGISTERED ELECTRICAL ENGINEER DATE

REGISTERED PROFESSIONAL ENGINEER — SYN YEE CHIN No. 18186 Exp. 09/30/2011 ELECTRICAL — STATE OF CALIFORNIA

05-06-2010
PLANS APPROVAL DATE

PB AMERICAS, Inc.
A Parsons Brinckerhoff Company
303 Second St., Suite 700N
San Francisco, CA 94107-1317

The State of California or its officers or agents shall not be responsible for the accuracy or completeness of electronic copies of this plan sheet.

Caltrans now has a web site! To get to the web site, go to http://www.dot.ca.gov

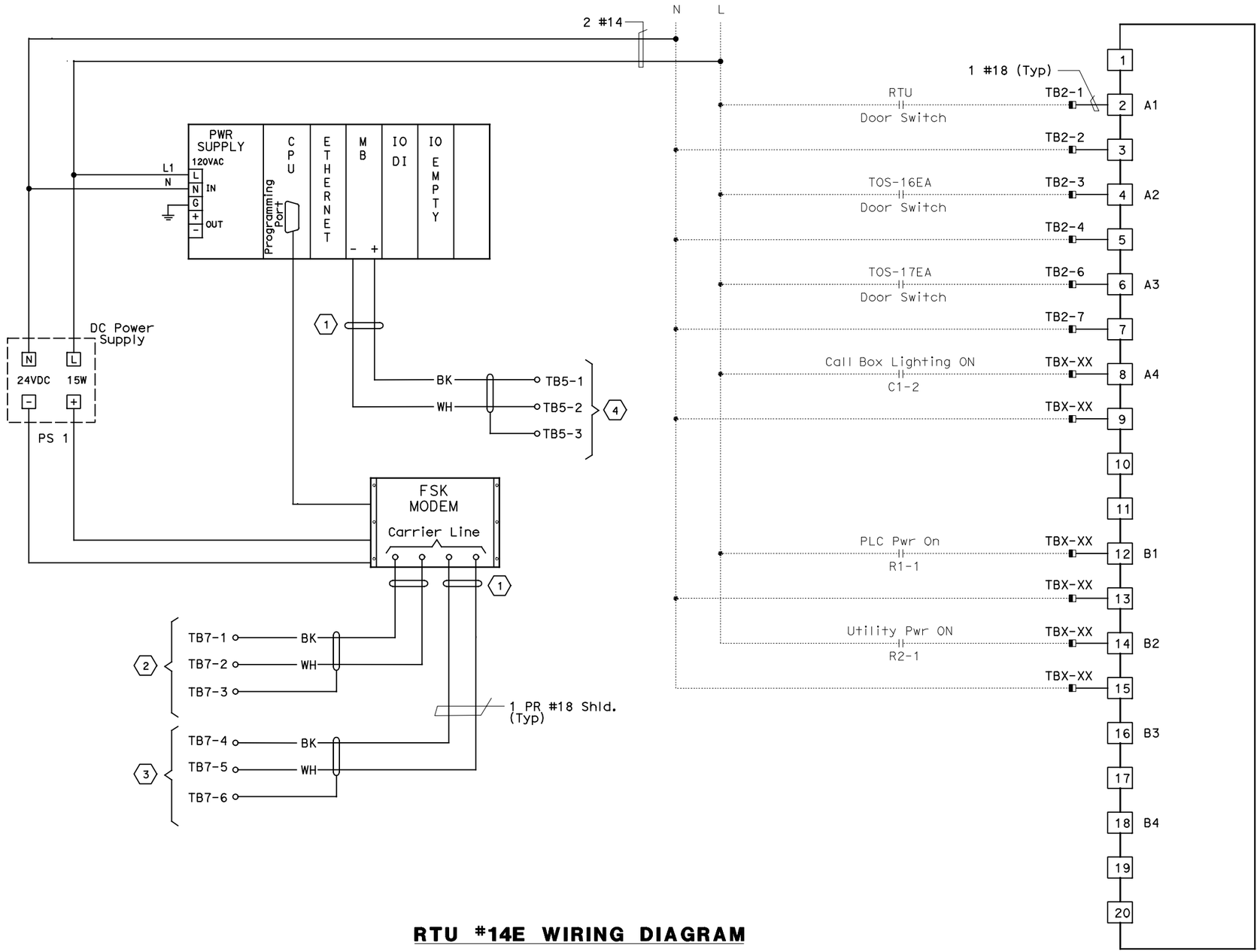

RTU #14E WIRING DIAGRAM

RTU #14E

8 POINT DIGITAL INPUT
RACK 1, SLOT 4

NOTES:

1. Contractor shall install input card. See sheet E-931 for location.
2. Contractor shall wire connection shown by bold lines.

SHEET NOTES:

(1) Contractor to tape shield. This circuit is not to be grounded at this end.

(2) Pair 7 of 50 pair SCADA cable.

(3) Pair 8 of 50 pair SCADA cable.

(4) To Call Box Communications cable RS-485.

REQUEST FOR INFORMATION NOT ADDRESSED IN THIS CCO REMAIN IN FORCE

MARK	DATE	DESCRIPTIONS / REVISIONS	BY	CH'D	CCO#
0	03/08/10	MEP INTEGRATION	JE	FW	110

CONTRACT CHANGE ORDER NO._____
SHEET _____ OF _____

DETAILS
SCADA REMOTE TERMINAL UNIT SYSTEM
RTU #14E WIRING DIAGRAM
NO SCALE

E-934

STATE OF CALIFORNIA - DEPARTMENT OF TRANSPORTATION
Caltrans
DESIGN OVERSIGHT
BEHZAD GOLEMOHAMMADI
CALCULATED/DESIGNED BY
CHECKED BY
DATE 01/10
SYC
FW
REVISED BY
DATE REVISED

THIS PLAN ACCURATE FOR ELECTRICAL WORK ONLY.

FOR REDUCED PLANS ORIGINAL SCALE IS IN MILLIMETERS 0 20 40 60 80

DGN FILE =>04-0120f1_E-934.dgn
USERNAME =>llorico

CU 04251

EA 0120F1

DATE PLOTTED => 06-MAY-2010
TIME PLOTTED => 19:09

LAST REVISION 00-00-00

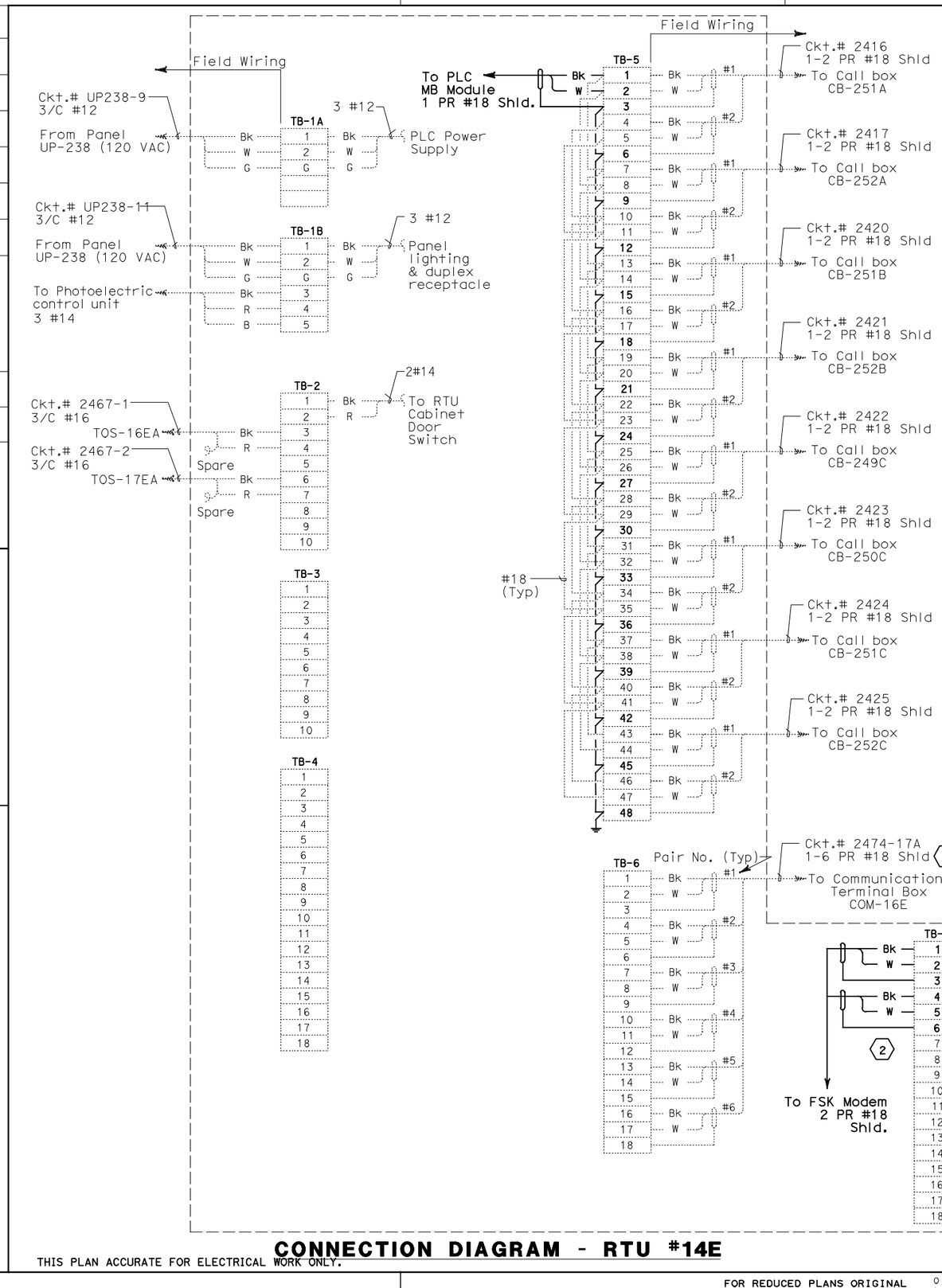

CONNECTION DIAGRAM - RTU #14E

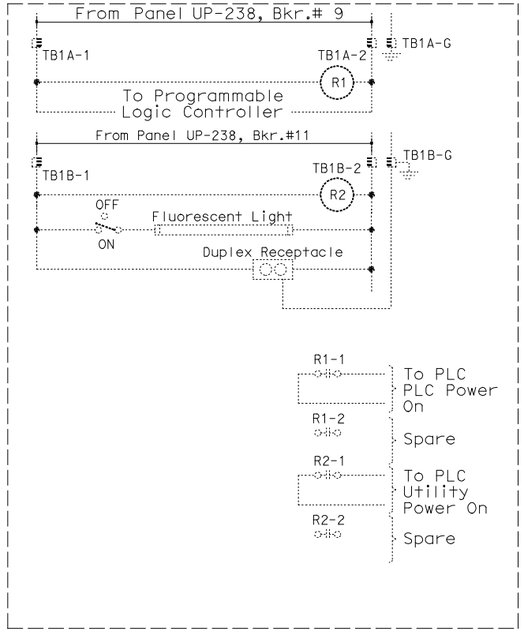

ELEMENTARY DIAGRAM - RTU #14E

Caltrans Metric

DIST	COUNTY	ROUTE	KILOMETER POST TOTAL PROJECT	SHEET No	TOTAL SHEETS
04	SF,Ala	80	12.2/14.3 0.0/4.0	407a 09S44	1204

Syn Yee Chin 03/08/10
REGISTERED ELECTRICAL ENGINEER DATE

SYN YEE CHIN No. 18186 Exp. 09/30/2011 ELECTRICAL — REGISTERED PROFESSIONAL ENGINEER — STATE OF CALIFORNIA

05-06-2010
PLANS APPROVAL DATE

PB AMERICAS, Inc.
A Parsons Brinckerhoff Company
303 Second St., Suite 700N
San Francisco, CA 94107-1317

The State of California or its officers or agents shall not be responsible for the accuracy or completeness of electronic copies of this plan sheet.

Caltrans now has a web site! To get to the web site, go to http://www.dot.ca.gov

NOTES:

1. This Plan Sheet is a record drawing of the Skyway Structures Remote Terminal Unit No. 14E. The Contractor shall verify the existing installation. See sheet EE-359 from the Skyway Structures, contract No. 04-012024.
2. References:
   Refer to sheet E-934.
3. Contractor shall wire connection shown by bold lines.

SHEET NOTES:

(1) Verify that the shield is not grounded.

(2) Do not ground shield.

REQUEST FOR INFORMATION NOT ADDRESSED IN THIS CCO REMAIN IN FORCE

MARK	DATE	DESCRIPTIONS	BY	CH'D	CCO#
		REVISIONS			
0	03/08/10	MEP INTEGRATION	JE	FW	110

CONTRACT CHANGE ORDER NO._____
SHEET _____ OF _____

DETAILS
SCADA REMOTE TERMINAL UNIT SYSTEM
RTU #14E ELEMENTARY AND CONNECTION DIAGRAMS

NO SCALE

E-935

CALCULATED/ DESIGNED BY	DATE 01/10	REVISED BY	DATE REVISED
CHECKED BY	SYC FW		

DESIGN OVERSIGHT
BEHZAD GOLEMOHAMMADI

STATE OF CALIFORNIA - DEPARTMENT OF TRANSPORTATION
Caltrans

THIS PLAN ACCURATE FOR ELECTRICAL WORK ONLY.

FOR REDUCED PLANS ORIGINAL SCALE IS IN MILLIMETERS 0 20 40 60 80

DGN FILE =>04-0120f1_E-935.dgn
USERNAME =>llorico

CU 04251

EA 0120F1

LAST REVISION 00-00-00
DATE PLOTTED => 06-MAY-2010
TIME PLOTTED => 19:09

DIST	COUNTY	ROUTE	KILOMETER POST TOTAL PROJECT	SHEET No	TOTAL SHEETS
04	SF,Ala	80	12.2/14.3 0.0/4.0	407a 09S45	1204

Syn Yee Chin 03/08/10
REGISTERED ELECTRICAL ENGINEER DATE

05-06-2010
PLANS APPROVAL DATE

REGISTERED PROFESSIONAL ENGINEER
SYN YEE CHIN
No. 18186
Exp. 09/30/2011
ELECTRICAL
STATE OF CALIFORNIA

PB AMERICAS, Inc.
A Parsons Brinckerhoff Company
303 Second St., Suite 700N
San Francisco, CA 94107-1317

The State of California or its officers or agents shall not be responsible for the accuracy or completeness of electronic copies of this plan sheet.

Caltrans now has a web site! To get to the web site, go to http://www.dot.ca.gov

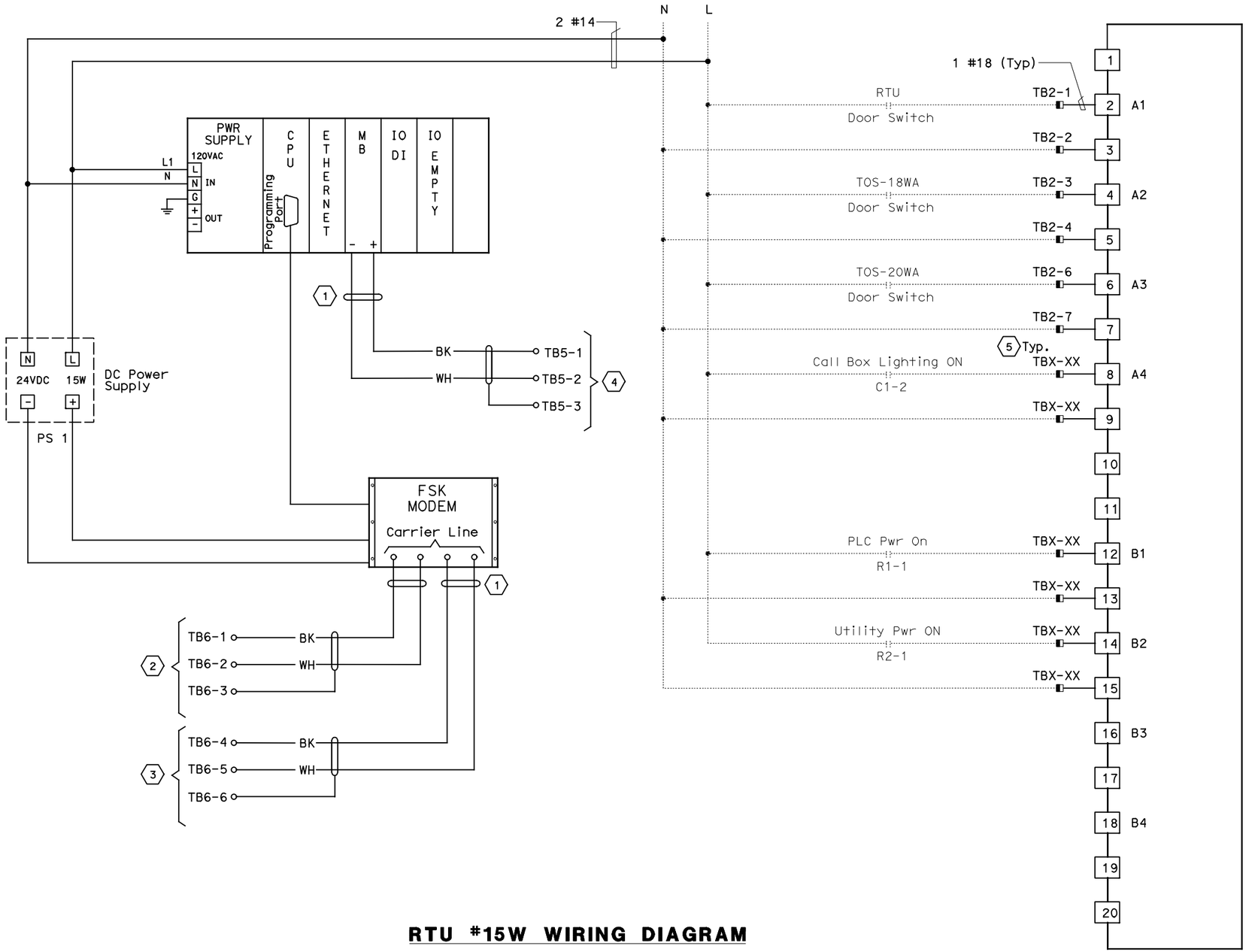

RTU #15W WIRING DIAGRAM

RTU #15W
8 POINT DIGITAL INPUT
RACK 1, SLOT 4

NOTES:

1. Contractor shall install input card. See sheet E-931 for location.
2. Contractor shall wire connection shown by bold lines.

SHEET NOTES:

(1) Contractor to tape shield. This circuit is not to be grounded at this end.

(2) Pair 1 of 50 pair SCADA cable.

(3) Pair 2 of 50 pair SCADA cable.

(4) To Call Box Communications cable RS-485.

(5) Contractor shall field verify the "TBX-XX" terminal block designations and equipment contact identification.

REQUEST FOR INFORMATION NOT ADDRESSED IN THIS CCO REMAIN IN FORCE

MARK	DATE	DESCRIPTIONS	BY	CH'D	CCO#
		REVISIONS			
0	03/08/10	MEP INTEGRATION	JE	FW	110

CONTRACT CHANGE ORDER NO._____
SHEET _____ OF _____

DETAILS
SCADA REMOTE TERMINAL UNIT SYSTEM
RTU #15W WIRING DIAGRAM
NO SCALE

E-936

DESIGN OVERSIGHT	CALCULATED/ DESIGNED BY	DATE	REVISED BY
BEHZAD GOLEMOHAMMADI	CHECKED BY	SYC 01/10	FW 01/10

STATE OF CALIFORNIA - DEPARTMENT OF TRANSPORTATION
Caltrans

THIS PLAN ACCURATE FOR ELECTRICAL WORK ONLY.

FOR REDUCED PLANS ORIGINAL SCALE IS IN MILLIMETERS 0 20 40 60 80

DGN FILE =>04-0120f1_E-936.dgn
USERNAME =>llorico

CU 04251

EA 0120F1

LAST REVISION 00-00-00
DATE PLOTTED => 06-MAY-2010
TIME PLOTTED => 19:09

DIST	COUNTY	ROUTE	KILOMETER POST TOTAL PROJECT	SHEET No	TOTAL SHEETS
04	SF, Ala	80	12.2/14.3 0.0/4.0	407a 09S46	1204

Syn Yee Chin 03/08/10
REGISTERED ELECTRICAL ENGINEER DATE

05-06-2010
PLANS APPROVAL DATE

REGISTERED PROFESSIONAL ENGINEER
SYN YEE CHIN
No. 18186
Exp. 09/30/2011
ELECTRICAL
STATE OF CALIFORNIA

PB AMERICAS, Inc.
A Parsons Brinckerhoff Company
303 Second St., Suite 700N
San Francisco, CA 94107-1317

The State of California or its officers or agents shall not be responsible for the accuracy or completeness of electronic copies of this plan sheet.

Caltrans now has a web site! To get to the web site, go to http://www.dot.ca.gov

Caltrans Metric

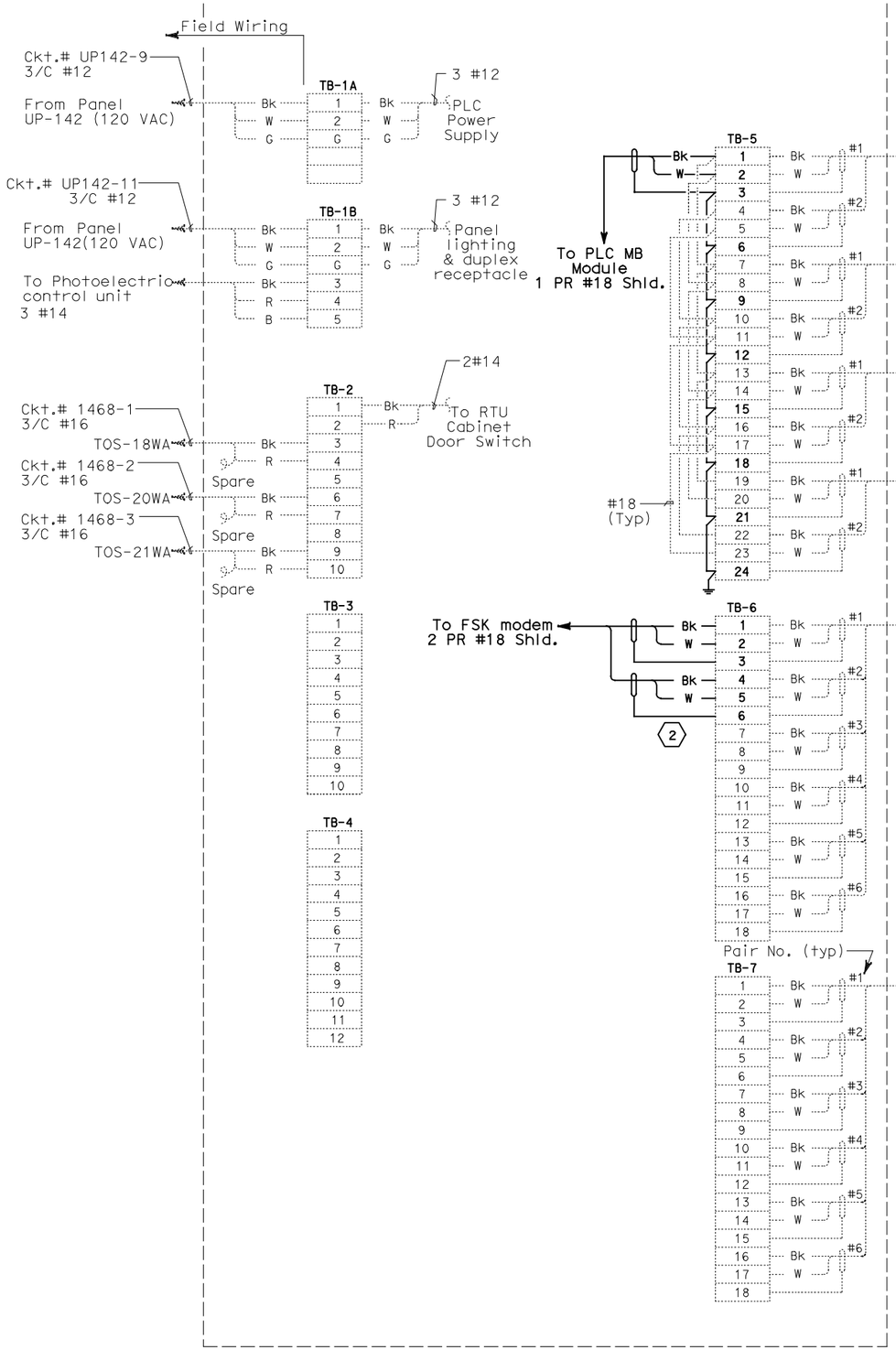

CONNECTION DIAGRAM - RTU #15W

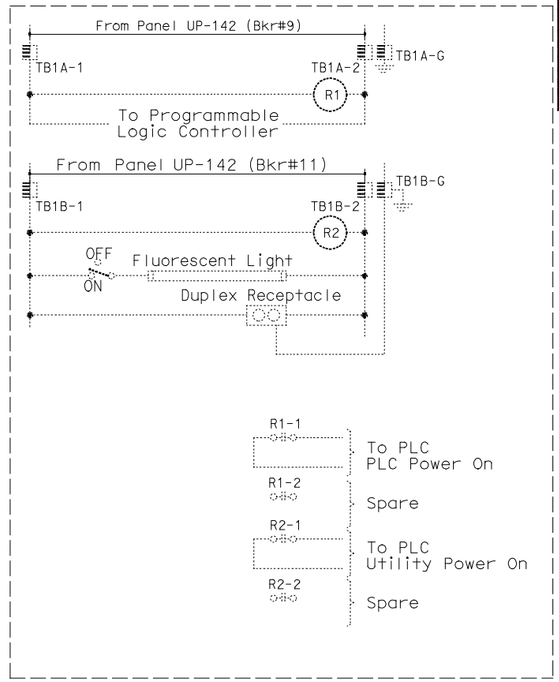

ELEMENTARY DIAGRAM - RTU#15W

NOTES:

1. This Plan Sheet is a record drawing of the Skyway Structures Remote Terminal Unit No. 15W. The Contractor shall verify the existing installation. See sheet EE-353 from the Skyway Structures, contract No. 04-012024.
2. References:
   See sheet E-936.
3. Contractor shall wire connection shown by bold lines.

SHEET NOTES:

(1) Verify that the shield is not grounded.
(2) Do not ground shield.

REQUEST FOR INFORMATION NOT ADDRESSED IN THIS CCO REMAIN IN FORCE					
0	03/08/10	MEP INTEGRATION	JE	FW	110
MARK	DATE	DESCRIPTIONS	BY	CH'D	CCO#
REVISIONS					

CONTRACT CHANGE ORDER NO._____
SHEET _____ OF _____

DETAILS
SCADA REMOTE TERMINAL UNIT SYSTEM
RTU #15W ELEMENTARY AND CONNECTION DIAGRAMS

NO SCALE

E-937

THIS PLAN ACCURATE FOR ELECTRICAL WORK ONLY.

STATE OF CALIFORNIA - DEPARTMENT OF TRANSPORTATION
Caltrans

DESIGN OVERSIGHT	CALCULATED/ DESIGNED BY	DATE	REVISED BY
BEHZAD GOLEMOHAMMADI	CHECKED BY	SYC 01/10	DATE REVISED
		FW 01/10	

FOR REDUCED PLANS ORIGINAL SCALE IS IN MILLIMETERS 0 20 40 60 80

DGN FILE =>04-0120f1_E-937.dgn
USERNAME =>llorico

CU 04251

EA 0120F1

LAST REVISION 00-00-00
DATE PLOTTED => 06-MAY-2010
TIME PLOTTED => 19:09

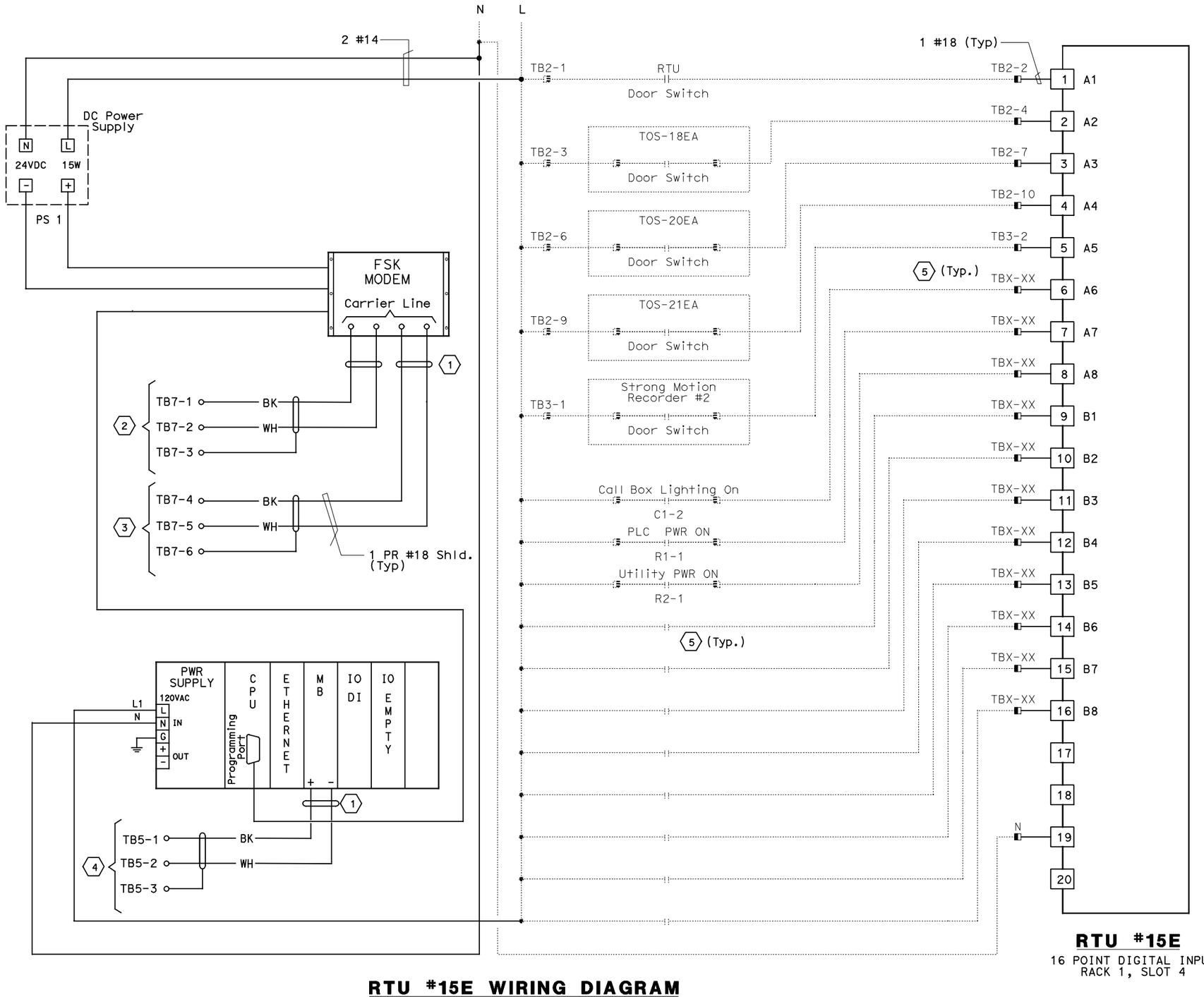

RTU #15E WIRING DIAGRAM

RTU #15E
16 POINT DIGITAL INPUT
RACK 1, SLOT 4

DIST	COUNTY	ROUTE	KILOMETER POST TOTAL PROJECT	SHEET No	TOTAL SHEETS
04	SF, Ala	80	12.2/14.3 0.0/4.0	407a 09S47	1204

Syn Yee Chin 03/08/10
REGISTERED ELECTRICAL ENGINEER DATE

05-06-2010
PLANS APPROVAL DATE

REGISTERED PROFESSIONAL ENGINEER
SYN YEE CHIN
No. 18186
Exp. 09/30/2011
ELECTRICAL
STATE OF CALIFORNIA

PB AMERICAS, Inc.
A Parsons Brinckerhoff Company
303 Second St., Suite 700N
San Francisco, CA 94107-1317

The State of California or its officers or agents shall not be responsible for the accuracy or completeness of electronic copies of this plan sheet.

Caltrans now has a web site! To get to the web site, go to http://www.dot.ca.gov

NOTES:

1. Contractor shall install input card. See sheet E-931 for location.
2. Contractor shall wire connection shown by bold lines.

SHEET NOTES:

1. Contractor to tape shield. This circuit is not to be grounded at this end.
2. Pair 7 of 50 pair SCADA cable.
3. Pair 8 of 50 pair SCADA cable.
4. To Call Box Communications cable RS-485.
5. Contractor to field verify the "TBX-XX" terminal block designations, and equipment contact identification.

REQUEST FOR INFORMATION NOT ADDRESSED IN THIS CCO REMAIN IN FORCE

MARK	DATE	REVISIONS	BY	CH'D	CCO#
0	03/08/10	MEP INTEGRATION	JE	FW	110

CONTRACT CHANGE ORDER NO._____
SHEET _____ OF _____

DETAILS
SCADA REMOTE TERMINAL UNIT SYSTEM
RTU #15E WIRING DIAGRAM
NO SCALE

E-938

DESIGN OVERSIGHT
BEHZAD GOLEMOHAMMADI

CALCULATED/DESIGNED BY
CHECKED BY
SYC
FW
DATE 01/10
01/10
REVISED BY
DATE REVISED

STATE OF CALIFORNIA - DEPARTMENT OF TRANSPORTATION
Caltrans

THIS PLAN ACCURATE FOR ELECTRICAL WORK ONLY.

FOR REDUCED PLANS ORIGINAL SCALE IS IN MILLIMETERS 0 20 40 60 80

DGN FILE =>04-0120f1_E-938.dgn
USERNAME =>llorico

CU 04251

EA 0120F1

LAST REVISION 00-00-00
DATE PLOTTED => 06-MAY-2010
TIME PLOTTED => 19:09

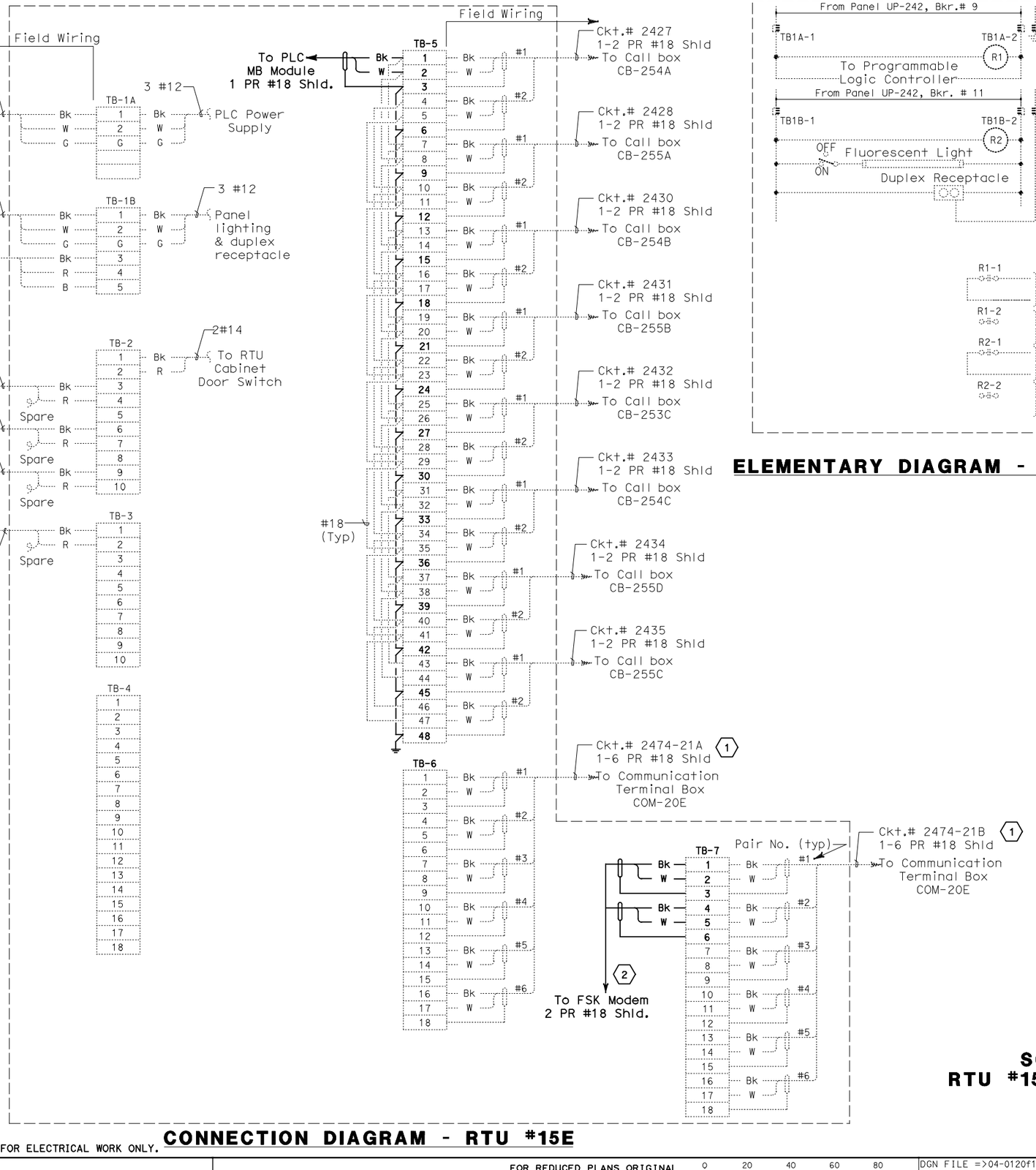

CONNECTION DIAGRAM - RTU #15E

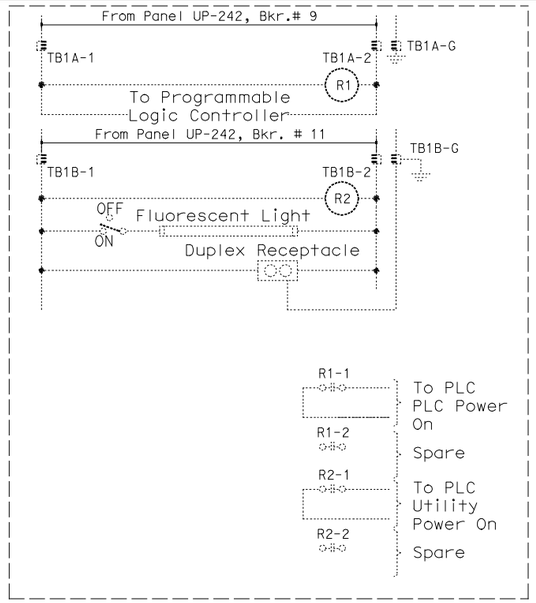

ELEMENTARY DIAGRAM - RTU #15E

Caltrans Metric

DIST	COUNTY	ROUTE	KILOMETER POST TOTAL PROJECT	SHEET No	TOTAL SHEETS
04	SF,Ala	80	12.2/14.3 0.0/4.0	407a 09S48	1204

Syn Yee Chin 03/08/10
REGISTERED ELECTRICAL ENGINEER DATE

REGISTERED PROFESSIONAL ENGINEER
SYN YEE CHIN
No. 18186
Exp. 09/30/2011
ELECTRICAL
STATE OF CALIFORNIA

05-06-2010
PLANS APPROVAL DATE

PB AMERICAS, Inc.
A Parsons Brinckerhoff Company
303 Second St., Suite 700N
San Francisco, CA 94107-1317

The State of California or its officers or agents shall not be responsible for the accuracy or completeness of electronic copies of this plan sheet.

Caltrans now has a web site! To get to the web site, go to http://www.dot.ca.gov

NOTES:

1. This Plan Sheet is a record drawing of the Skyway Structures Remote Terminal Unit No. 15E. The Contractor shall verify the existing installation. See sheet EE-360 from the Skyway Structures, contract No. 04-012024.
2. References:
   See sheet E-938.
3. Contractor shall wire connection shown by bold lines.

SHEET NOTES:

(1) Verify that the shield is not grounded.

(2) Do not ground shield.

REQUEST FOR INFORMATION NOT ADDRESSED IN THIS CCO REMAIN IN FORCE

MARK	DATE	DESCRIPTIONS / REVISIONS	BY	CH'D	CCO#
0	03/08/10	MEP INTEGRATION	JE	FW	110

CONTRACT CHANGE ORDER NO._____
SHEET _____ OF _____

DETAILS
SCADA REMOTE TERMINAL UNIT SYSTEM
RTU #15E ELEMENTARY AND CONNECTION DIAGRAMS
NO SCALE

E-939

DESIGN OVERSIGHT: BEHZAD GOLEMOHAMMADI
STATE OF CALIFORNIA - DEPARTMENT OF TRANSPORTATION
Caltrans

REVISED BY	DATE REVISED
CALCULATED/DESIGNED BY	SYC 01/10
CHECKED BY	FW 01/10

THIS PLAN ACCURATE FOR ELECTRICAL WORK ONLY.

FOR REDUCED PLANS ORIGINAL SCALE IS IN MILLIMETERS 0 20 40 60 80

DGN FILE =>04-0120f1_E-939.dgn
USERNAME =>llorico

CU 04251

EA 0120F1

LAST REVISION 00-00-00
DATE PLOTTED => 06-MAY-2010
TIME PLOTTED => 19:09

DIST	COUNTY	ROUTE	KILOMETER POST TOTAL PROJECT	SHEET No	TOTAL SHEETS
04	SF,Ala	80	12.2/14.3 0.0/4.0	407a 09S49	1204

Syn Yee Chin 03/08/10
REGISTERED ELECTRICAL ENGINEER DATE

05-06-2010
PLANS APPROVAL DATE

REGISTERED PROFESSIONAL ENGINEER
SYN YEE CHIN
No. 18186
Exp. 09/30/2011
ELECTRICAL
STATE OF CALIFORNIA

PB AMERICAS, Inc.
A Parsons Brinckerhoff Company
303 Second St., Suite 700N
San Francisco, CA 94107-1317

The State of California or its officers or agents shall not be responsible for the accuracy or completeness of electronic copies of this plan sheet.

Caltrans now has a web site! To get to the web site, go to http://www.dot.ca.gov

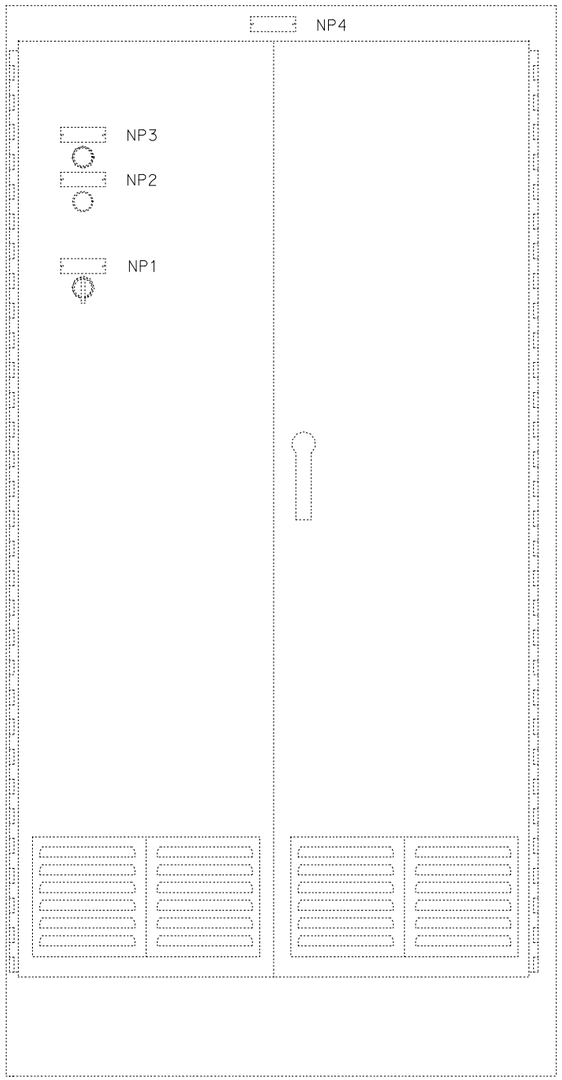

FRONT EXTERIOR

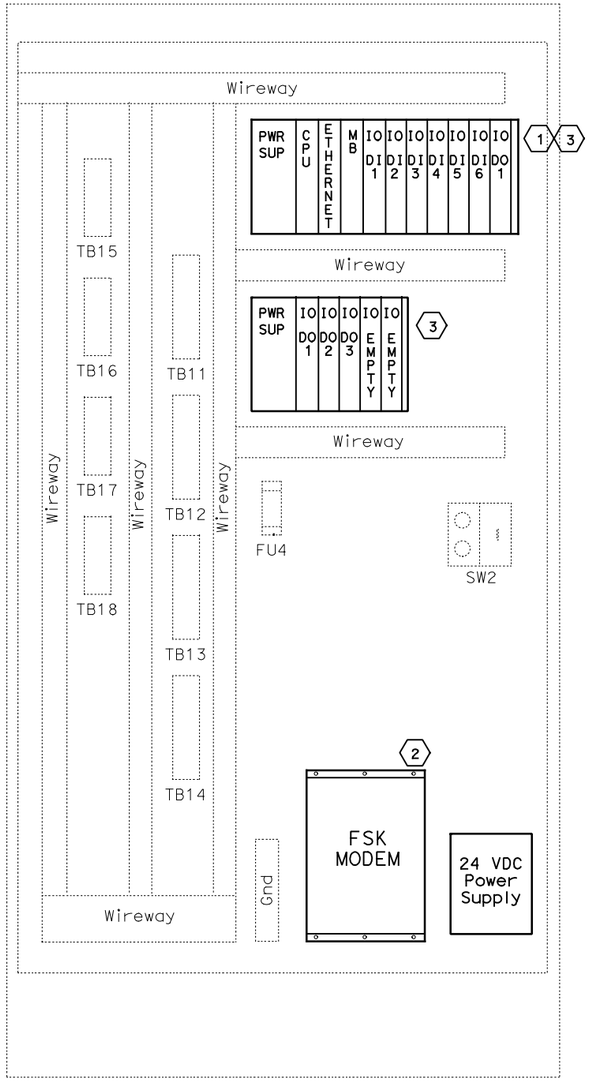

FRONT INTERIOR

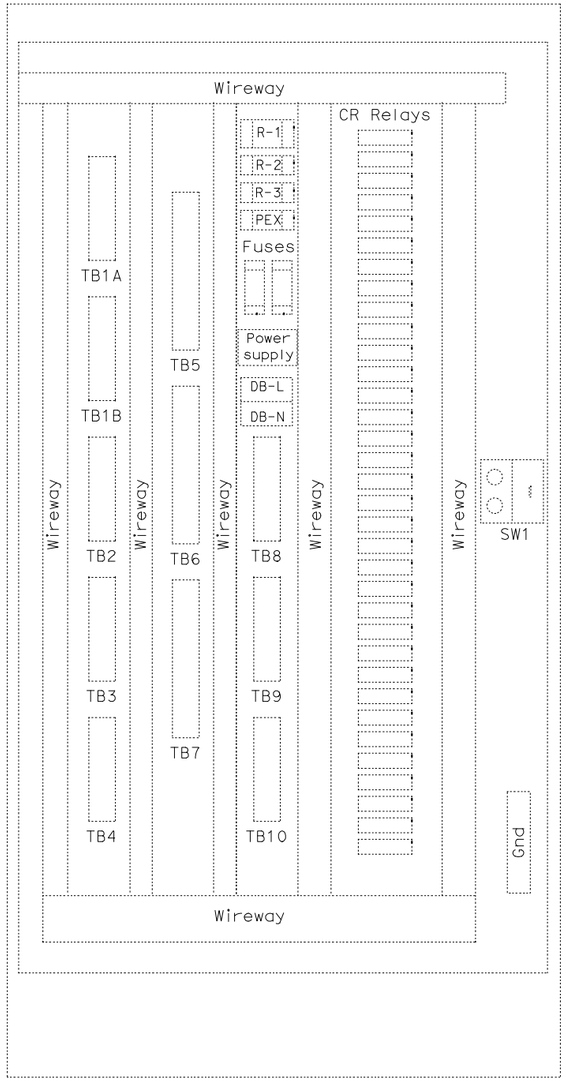

REAR INTERIOR

NOTES:

1. Refer to the special provisions for the PLC and FSK Modem requirements.
2. For RTU wiring see the following sheets, E-941 through E-951.

SHEET NOTES:

(1) Contractor shall furnish and install a new GE Fanuc PAC Systems RX3i PLC in the existing RTU.

(2) Contractor shall furnish and install a new Frequency Shift Key (FSK) modem and 120v (AC) to 21v-28v (DC) power supply in the existing RTU.

(3) Contractor shall install the input and output cards.

REQUEST FOR INFORMATION NOT ADDRESSED IN THIS CCO REMAIN IN FORCE

MARK	DATE	DESCRIPTIONS	BY	CH'D	CCO#
		REVISIONS			
0	03/08/10	MEP INTEGRATION	JE	FW	110

CONTRACT CHANGE ORDER NO._____
SHEET _____ OF _____

DETAILS
SCADA REMOTE TERMINAL UNIT SYSTEM
RTU #16 ASSEMBLY
NO SCALE

E-940

STATE OF CALIFORNIA - DEPARTMENT OF TRANSPORTATION
Caltrans
DESIGN OVERSIGHT
BEHZAD GOLEMOHAMMADI
CALCULATED/ DESIGNED BY
CHECKED BY
SYC FW
DATE 01/10 01/10
REVISED BY DATE REVISED

THIS PLAN ACCURATE FOR ELECTRICAL WORK ONLY.

FOR REDUCED PLANS ORIGINAL SCALE IS IN MILLIMETERS 0 20 40 60 80

DGN FILE =>04-0120f1_E-940.dgn
USERNAME =>llorico

CU 04251 EA 0120F1

LAST REVISION 00-00-00
DATE PLOTTED => 06-MAY-2010
TIME PLOTTED => 19:09

DIST	COUNTY	ROUTE	KILOMETER POST TOTAL PROJECT	SHEET No	TOTAL SHEETS
04	SF,Ala	80	12.2/14.3 0.0/4.0	407a 09S50	1204

Syn Yee Chin 03/08/10
REGISTERED ELECTRICAL ENGINEER DATE

SYN YEE CHIN
No. 18186
Exp. 09/30/2011
ELECTRICAL
REGISTERED PROFESSIONAL ENGINEER
STATE OF CALIFORNIA

05-06-2010
PLANS APPROVAL DATE

PB AMERICAS, Inc.
A Parsons Brinckerhoff Company
303 Second St., Suite 700N
San Francisco, CA 94107-1317

The State of California or its officers or agents shall not be responsible for the accuracy or completeness of electronic copies of this plan sheet.

Caltrans now has a web site! To get to the web site, go to http://www.dot.ca.gov

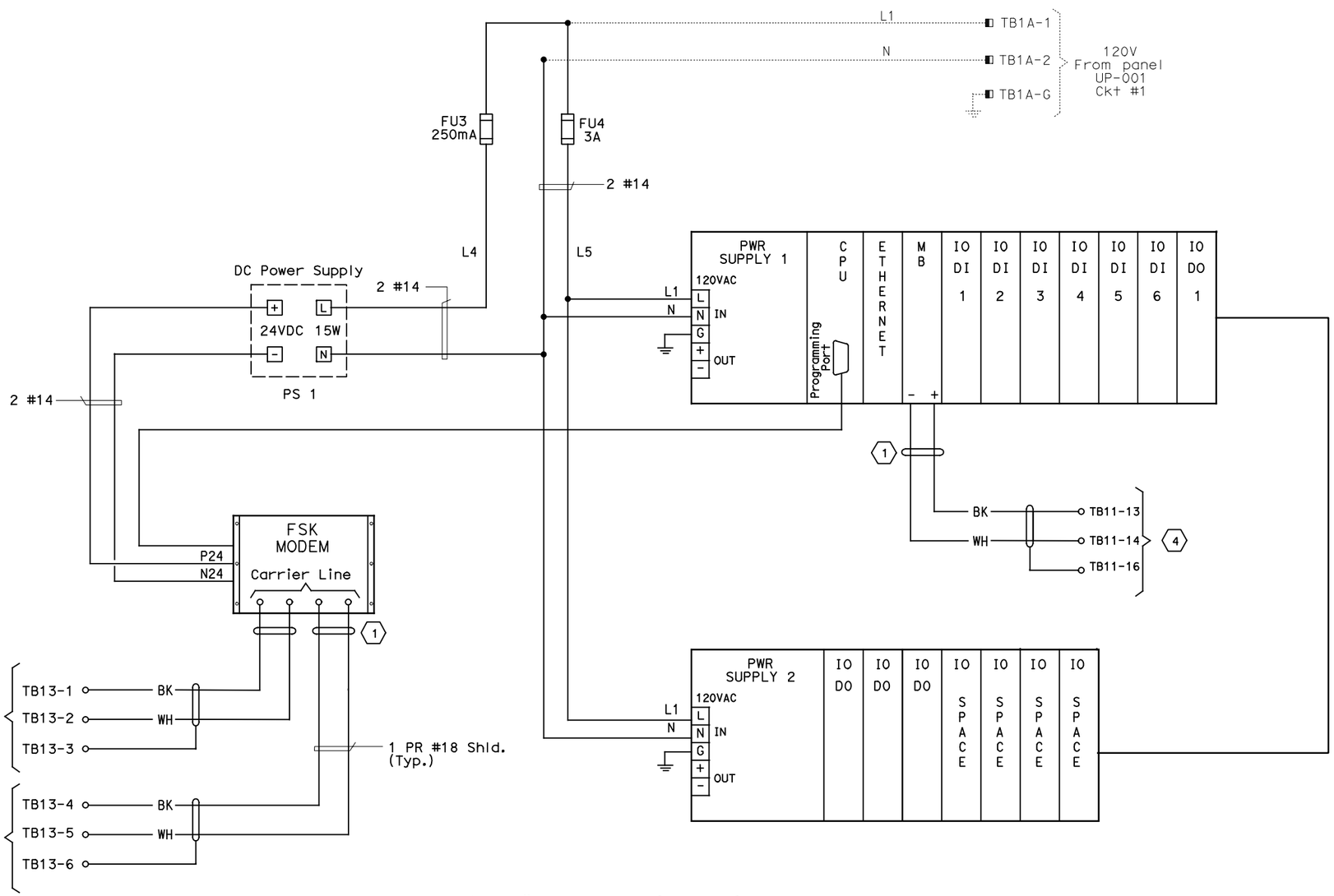

RTU #16 WIRING DIAGRAM

NOTES:

1. For RTU wiring see sheets E-942 through E-949.
2. For FSK to Modems interconnect wiring, see sheet E-902.
3. Contractor shall wire connection shown by bold lines.

SHEET NOTES:

(1) Contractor to tape shield. This circuit is not grounded at this end.

(2) Pair 7 of 50 pair SCADA cable

(3) Pair 8 of 50 pair SCADA cable.

(4) To management relay communication cable and Call Box Communications cable RS-485, see sheets E-950 and E-951.

REQUEST FOR INFORMATION NOT ADDRESSED IN THIS CCO REMAIN IN FORCE

MARK	DATE	DESCRIPTIONS	BY	CH'D	CCO#
		REVISIONS			
0	03/08/10	MEP INTEGRATION	JE	FW	110

CONTRACT CHANGE ORDER NO._____
SHEET _____ OF _____

DETAILS
SCADA REMOTE TERMINAL UNIT SYSTEM
RTU #16 WIRING DIAGRAM
NO SCALE

E-941

STATE OF CALIFORNIA - DEPARTMENT OF TRANSPORTATION
Caltrans
DESIGN OVERSIGHT
BEHZAD GOLEMOHAMMADI

DATE	SYC	CALCULATED/ DESIGNED BY	REVISED BY
01/10	FW	CHECKED BY	DATE REVISED

LAST REVISION 00-00-00
DATE PLOTTED => 06-MAY-2010
TIME PLOTTED => 19:09

THIS PLAN ACCURATE FOR ELECTRICAL WORK ONLY.

FOR REDUCED PLANS ORIGINAL SCALE IS IN MILLIMETERS 0 20 40 60 80

DGN FILE =>04-0120f1_E-941.dgn
USERNAME =>llorico

CU 04251

EA 0120F1

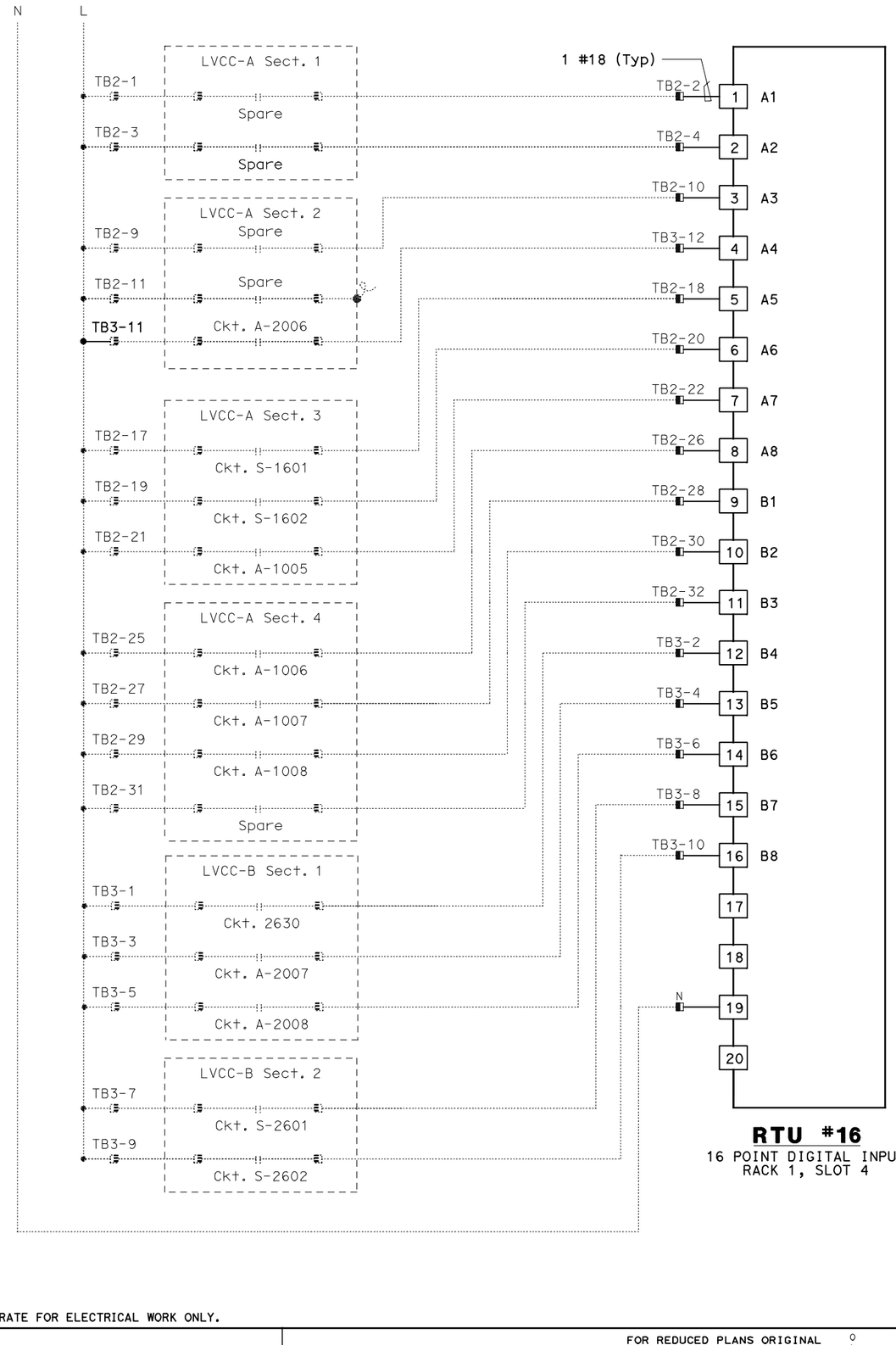

RTU #16
16 POINT DIGITAL INPUT
RACK 1, SLOT 4

Caltrans Metric

DIST	COUNTY	ROUTE	KILOMETER POST TOTAL PROJECT	SHEET No	TOTAL SHEETS
04	SF, Ala	80	12.2/14.3 0.0/4.0	407a 09S51	1204

Syn Yee Chin 03/08/10
REGISTERED ELECTRICAL ENGINEER DATE

05-06-2010
PLANS APPROVAL DATE

REGISTERED PROFESSIONAL ENGINEER
SYN YEE CHIN
No. 18186
Exp. 09/30/2011
ELECTRICAL
STATE OF CALIFORNIA

PB AMERICAS, Inc.
A Parsons Brinckerhoff Company
303 Second St., Suite 700N
San Francisco, CA 94107-1317

The State of California or its officers or agents shall not be responsible for the accuracy or completeness of electronic copies of this plan sheet.

Caltrans now has a web site! To get to the web site, go to http://www.dot.ca.gov

NOTES:

1. Contractor shall install input card. See sheet E-940 for location.
2. Contractor shall wire connection shown by bold lines.

REQUEST FOR INFORMATION NOT ADDRESSED IN THIS CCO REMAIN IN FORCE

MARK	DATE	DESCRIPTIONS	BY	CH'D	CCO#
		REVISIONS			
0	03/08/10	MEP INTEGRATION	JE	FW	110

CONTRACT CHANGE ORDER NO._____
SHEET _____ OF _____

DETAILS
SCADA REMOTE TERMINAL UNIT SYSTEM
RTU #16 WIRING DIAGRAM
NO SCALE

E-942

DESIGN OVERSIGHT	CALCULATED/ DESIGNED BY	DATE 01/10	REVISED BY
BEHZAD GOLEMOHAMMADI	CHECKED BY	01/10	DATE REVISED
	SYC	FW	

STATE OF CALIFORNIA - DEPARTMENT OF TRANSPORTATION
Caltrans

THIS PLAN ACCURATE FOR ELECTRICAL WORK ONLY.

FOR REDUCED PLANS ORIGINAL SCALE IS IN MILLIMETERS 0 20 40 60 80

DGN FILE =>04-0120f1_E-942.dgn
USERNAME =>llorico

CU 04251

EA 0120F1

LAST REVISION 00-00-00
DATE PLOTTED => 06-MAY-2010
TIME PLOTTED => 19:10

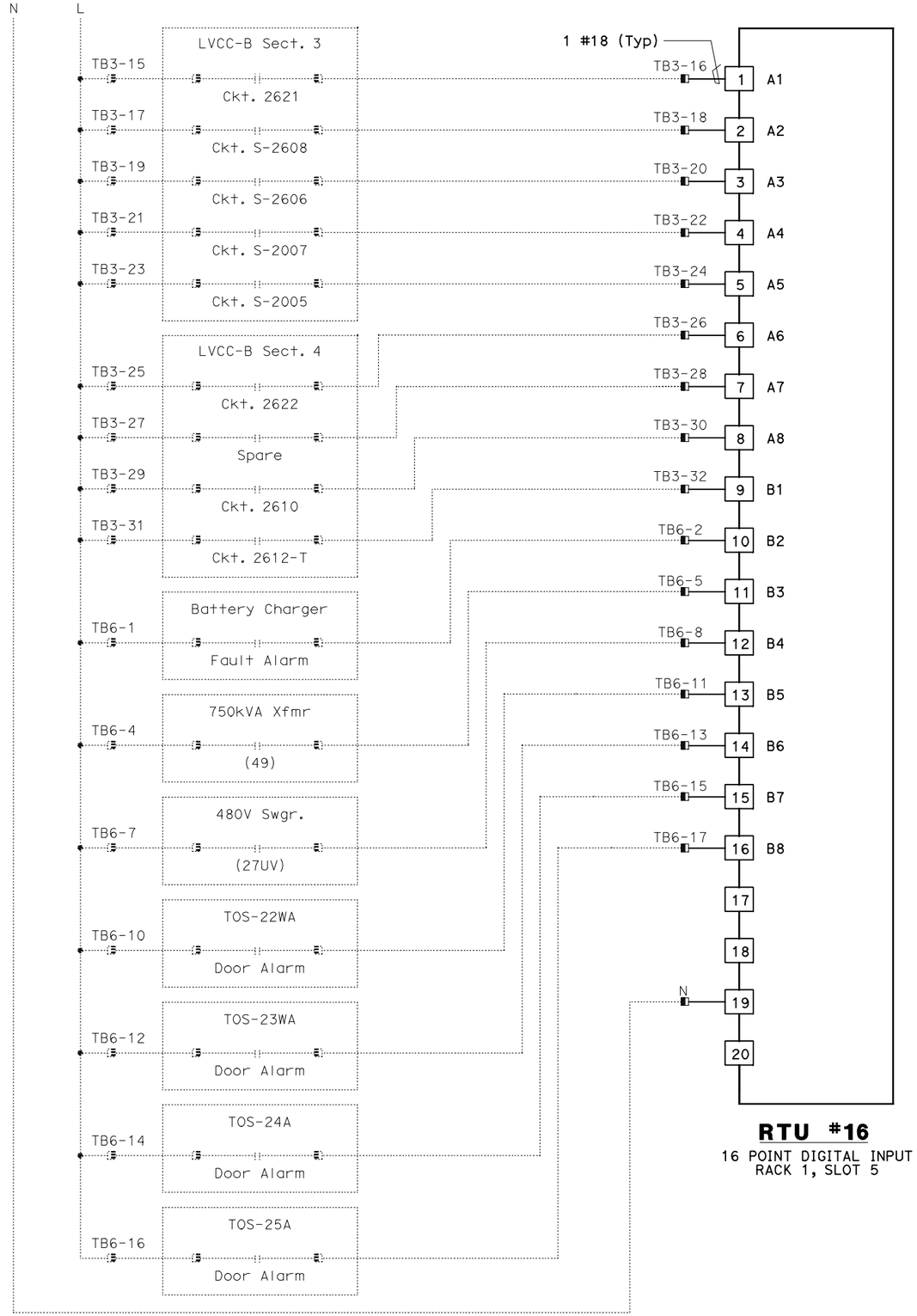

RTU #16

16 POINT DIGITAL INPUT
RACK 1, SLOT 5

THIS PLAN ACCURATE FOR ELECTRICAL WORK ONLY.

DIST	COUNTY	ROUTE	KILOMETER POST TOTAL PROJECT	SHEET No	TOTAL SHEETS
04	SF, Ala	80	12.2/14.3 0.0/4.0	407a 09S52	1204

Syn Yee Chin 03/08/10
REGISTERED ELECTRICAL ENGINEER DATE

05-06-2010
PLANS APPROVAL DATE

REGISTERED PROFESSIONAL ENGINEER
SYN YEE CHIN
No. 18186
Exp. 09/30/2011
ELECTRICAL
STATE OF CALIFORNIA

PB AMERICAS, Inc.
A Parsons Brinckerhoff Company
303 Second St., Suite 700N
San Francisco, CA 94107-1317

The State of California or its officers or agents shall not be responsible for the accuracy or completeness of electronic copies of this plan sheet.

Caltrans now has a web site! To get to the web site, go to http://www.dot.ca.gov

NOTES:

1. Contractor shall install input card. See sheet E-940 for location.
2. Contractor shall wire connection shown by bold lines.

REQUEST FOR INFORMATION NOT ADDRESSED IN THIS CCO REMAIN IN FORCE

MARK	DATE	DESCRIPTIONS	BY	CH'D	CCO#
		REVISIONS			
0	03/08/10	MEP INTEGRATION	JE	SYC	110

CONTRACT CHANGE ORDER NO._____
SHEET _____ OF _____

DETAILS
SCADA REMOTE TERMINAL UNIT SYSTEM
RTU #16 WIRING DIAGRAM

NO SCALE

E-943

CALCULATED/ DESIGNED BY	SYC	DATE 01/10	REVISED BY
CHECKED BY	FW	01/10	DATE REVISED

DESIGN OVERSIGHT
BEHZAD GOLEMOHAMMADI

STATE OF CALIFORNIA - DEPARTMENT OF TRANSPORTATION
Caltrans

LAST REVISION 00-00-00
DATE PLOTTED => 06-MAY-2010
TIME PLOTTED => 19:10

FOR REDUCED PLANS ORIGINAL SCALE IS IN MILLIMETERS 0 20 40 60 80

DGN FILE =>04-0120f1_E-943.dgn
USERNAME =>llorico

CU 04251

EA 0120F1

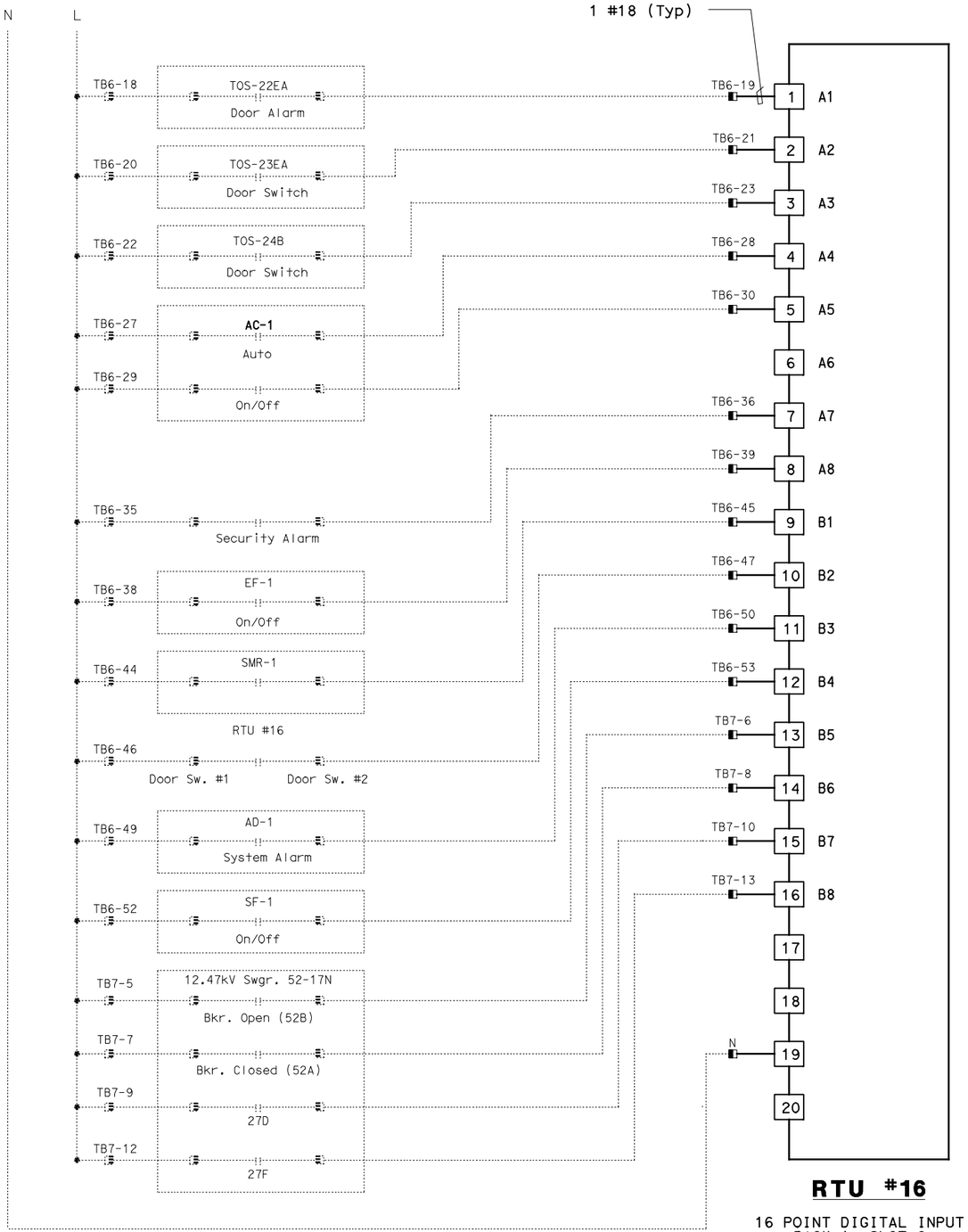

RTU #16

16 POINT DIGITAL INPUT
RACK 1, SLOT 6

DIST	COUNTY	ROUTE	KILOMETER POST TOTAL PROJECT	SHEET No	TOTAL SHEETS
04	SF,Ala	80	12.2/14.3 0.0/4.0	407a 09S53	1204

Synyee Chin 03/08/10
REGISTERED ELECTRICAL ENGINEER DATE

05-06-2010
PLANS APPROVAL DATE

REGISTERED PROFESSIONAL ENGINEER
SYN YEE CHIN
No. 18186
Exp. 09/30/2011
ELECTRICAL
STATE OF CALIFORNIA

PB AMERICAS, Inc.
A Parsons Brinckerhoff Company
303 Second St., Suite 700N
San Francisco, CA 94107-1317

The State of California or its officers or agents shall not be responsible for the accuracy or completeness of electronic copies of this plan sheet.

Caltrans now has a web site! To get to the web site, go to http://www.dot.ca.gov

NOTES:

1. Contractor shall install input card. See sheet E-940 for location.
2. Contractor shall wire connection shown by bold lines.

REQUEST FOR INFORMATION NOT ADDRESSED IN THIS CCO REMAIN IN FORCE

MARK	DATE	REVISIONS DESCRIPTIONS	BY	CH'D	CCO#
0	03/08/10	MEP INTEGRATION	JE	SYC	110

CONTRACT CHANGE ORDER NO._____
SHEET _____ OF _____

DETAILS
SCADA REMOTE TERMINAL UNIT SYSTEM
RTU #16 WIRING DIAGRAM

NO SCALE

E-944

DESIGN OVERSIGHT	CALCULATED/ DESIGNED BY	DATE 01/10	REVISED BY	DATE REVISED
BEHZAD GOLEMOHAMMADI	CHECKED BY	SYC FW	01/10	

STATE OF CALIFORNIA - DEPARTMENT OF TRANSPORTATION
Caltrans

THIS PLAN ACCURATE FOR ELECTRICAL WORK ONLY.

LAST REVISION 00-00-00 DATE PLOTTED => 06-MAY-2010 TIME PLOTTED => 19:10

FOR REDUCED PLANS ORIGINAL SCALE IS IN MILLIMETERS 0 20 40 60 80

DGN FILE =>04-0120f1_E-944.dgn
USERNAME =>llorico

CU 04251

EA 0120F1

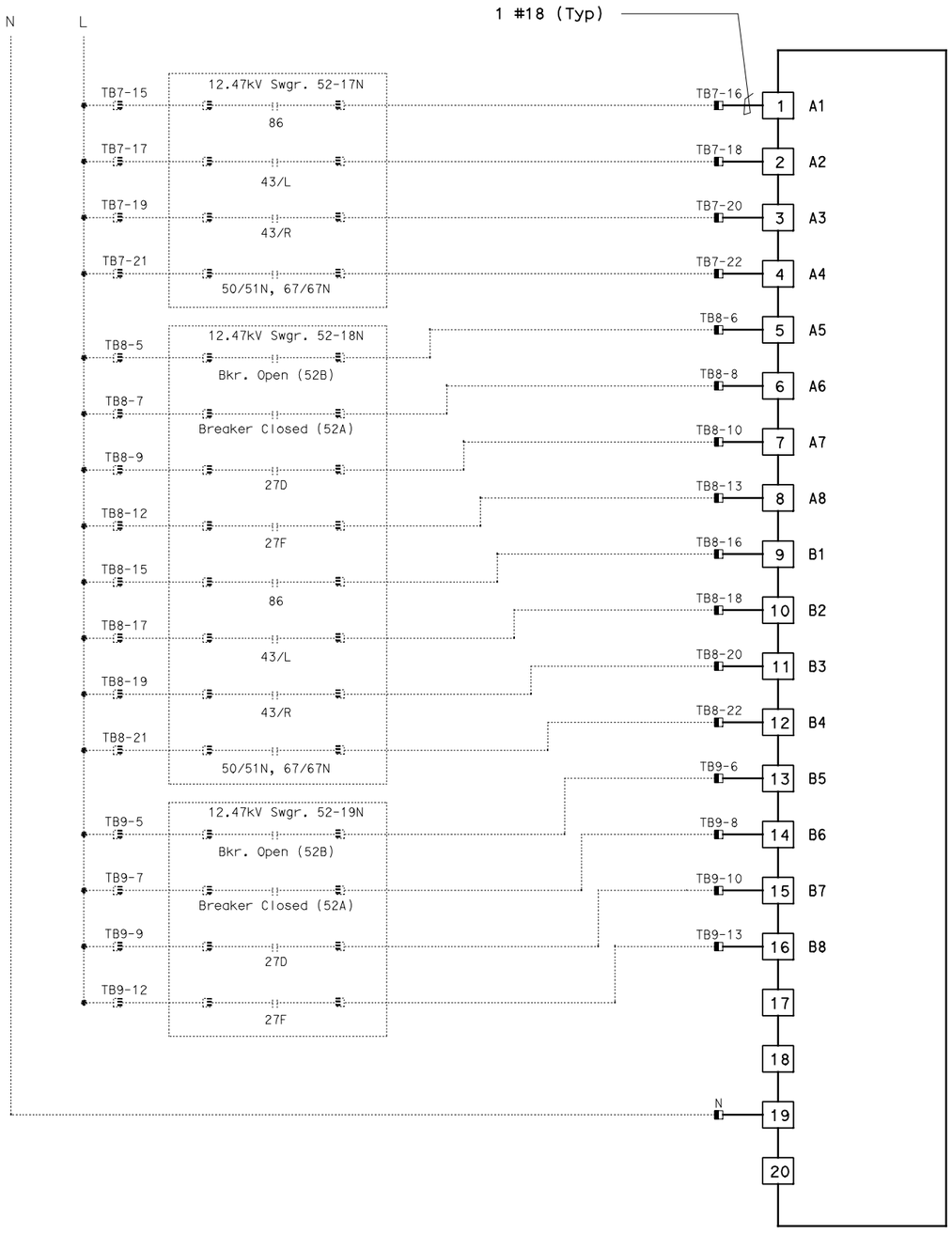

RTU #16

16 POINT DIGITAL INPUT
RACK 1, SLOT 7

DIST	COUNTY	ROUTE	KILOMETER POST TOTAL PROJECT	SHEET No	TOTAL SHEETS
04	SF, Ala	80	12.2/14.3 0.0/4.0	407a 09S54	1204

Synyee Chin 03/08/10
REGISTERED ELECTRICAL ENGINEER DATE

05-06-2010
PLANS APPROVAL DATE

REGISTERED PROFESSIONAL ENGINEER
SYN YEE CHIN
No. 18186
Exp. 09/30/2011
ELECTRICAL
STATE OF CALIFORNIA

PB AMERICAS, Inc.
A Parsons Brinckerhoff Company
303 Second St., Suite 700N
San Francisco, CA 94107-1317

The State of California or its officers or agents shall not be responsible for the accuracy or completeness of electronic copies of this plan sheet.

Caltrans now has a web site! To get to the web site, go to http://www.dot.ca.gov

NOTES:

1. Contractor shall install input card. See sheet E-940 for location.
2. Contractor shall wire connection shown by bold lines.

REQUEST FOR INFORMATION NOT ADDRESSED IN THIS CCO REMAIN IN FORCE

MARK	DATE	DESCRIPTIONS / REVISIONS	BY	CH'D	CCO#
0	03/08/10	MEP INTEGRATION	JE	SYC	110

CONTRACT CHANGE ORDER NO._____
SHEET _____ OF _____

DETAILS
SCADA REMOTE TERMINAL UNIT SYSTEM
RTU #16 WIRING DIAGRAM

NO SCALE

E-945

DESIGN OVERSIGHT
BEHZAD GOLEMOHAMMADI

STATE OF CALIFORNIA - DEPARTMENT OF TRANSPORTATION
Caltrans

CALCULATED/ DESIGNED BY	SYC	DATE 01/10	REVISED BY	DATE REVISED
CHECKED BY	FW	01/10		

THIS PLAN ACCURATE FOR ELECTRICAL WORK ONLY.

LAST REVISION 00-00-00
DATE PLOTTED => 06-MAY-2010
TIME PLOTTED => 19:10

FOR REDUCED PLANS ORIGINAL SCALE IS IN MILLIMETERS 0 20 40 60 80

DGN FILE =>04-0120f1_E-945.dgn
USERNAME =>llorico

CU 04251 EA 0120F1

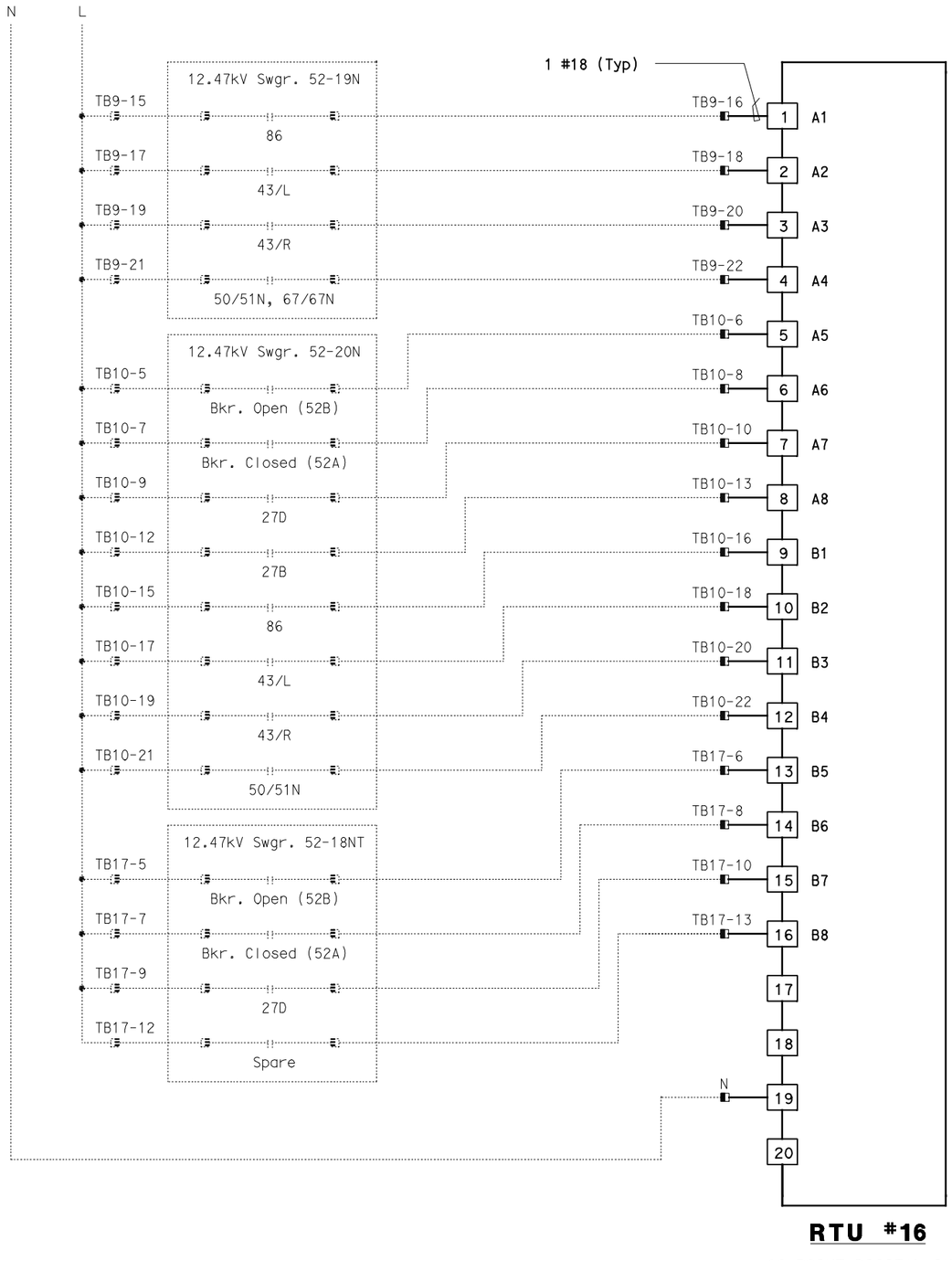

RTU #16

16 POINT DIGITAL INPUT
RACK 1, SLOT 8

DIST	COUNTY	ROUTE	KILOMETER POST TOTAL PROJECT	SHEET No	TOTAL SHEETS
04	SF, Ala	80	12.2/14.3 0.0/4.0	407a 09S55	1204

Syn Yee Chin 03/08/10
REGISTERED ELECTRICAL ENGINEER DATE

05-06-2010
PLANS APPROVAL DATE

REGISTERED PROFESSIONAL ENGINEER
SYN YEE CHIN
No. 18186
Exp. 09/30/2011
ELECTRICAL
STATE OF CALIFORNIA

PB AMERICAS, Inc.
A Parsons Brinckerhoff Company
303 Second St., Suite 700N
San Francisco, CA 94107-1317

The State of California or its officers or agents shall not be responsible for the accuracy or completeness of electronic copies of this plan sheet.

Caltrans now has a web site! To get to the web site, go to http://www.dot.ca.gov

NOTES:

1. Contractor shall install input card. See sheet E-940 for location.
2. Contractor shall wire connection shown by bold lines.

REQUEST FOR INFORMATION NOT ADDRESSED IN THIS CCO REMAIN IN FORCE

MARK	DATE	REVISIONS DESCRIPTIONS	BY	CH'D	CCO#
0	03/08/10	MEP INTEGRATION	JE	SYC	110

CONTRACT CHANGE ORDER NO._____
SHEET _____ OF _____

DETAILS
SCADA REMOTE TERMINAL UNIT SYSTEM
RTU #16 WIRING DIAGRAM
NO SCALE

E-946

DESIGN OVERSIGHT: BEHZAD GOLEMOHAMMADI
CALCULATED/DESIGNED BY: SYC
CHECKED BY: FW
DATE 01/10 REVISED BY: DATE REVISED

STATE OF CALIFORNIA - DEPARTMENT OF TRANSPORTATION
Caltrans

THIS PLAN ACCURATE FOR ELECTRICAL WORK ONLY.

LAST REVISION 00-00-00
DATE PLOTTED => 06-MAY-2010
TIME PLOTTED => 19:10

FOR REDUCED PLANS ORIGINAL SCALE IS IN MILLIMETERS 0 20 40 60 80
DGN FILE =>04-0120f1_E-946.dgn
USERNAME =>llorico
CU 04251
EA 0120F1

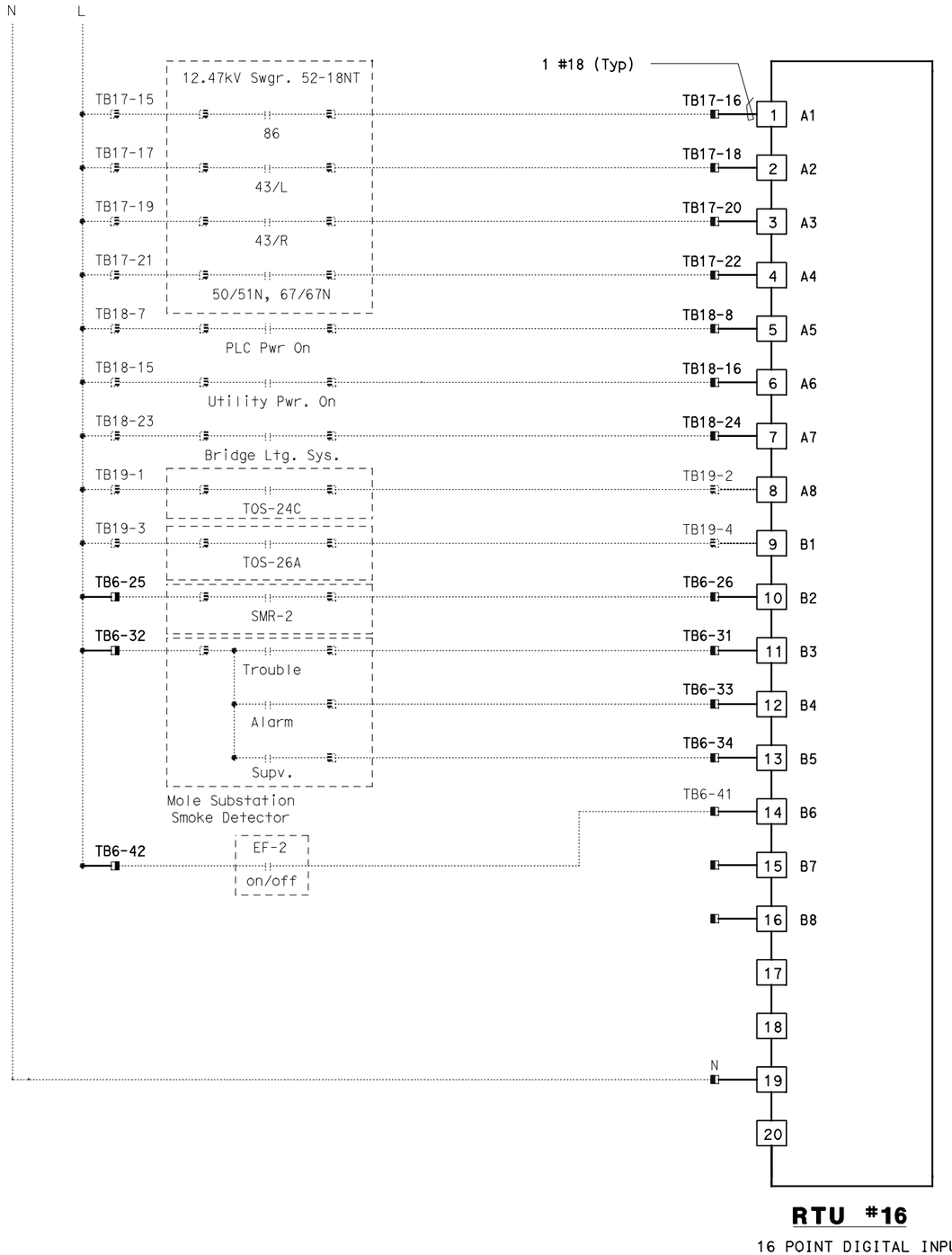

RTU #16

16 POINT DIGITAL INPUT
RACK 1, SLOT 9

Caltrans Metric

DIST	COUNTY	ROUTE	KILOMETER POST TOTAL PROJECT	SHEET No	TOTAL SHEETS
04	SF, Ala	80	12.2/14.3 0.0/4.0	407a 09S56	1204

Syn Yee Chin 03/08/10
REGISTERED ELECTRICAL ENGINEER DATE

05-06-2010
PLANS APPROVAL DATE

REGISTERED PROFESSIONAL ENGINEER
SYN YEE CHIN
No. 18186
Exp. 09/30/2011
ELECTRICAL
STATE OF CALIFORNIA

PB AMERICAS, Inc.
A Parsons Brinckerhoff Company
303 Second St., Suite 700N
San Francisco, CA 94107-1317

The State of California or its officers or agents shall not be responsible for the accuracy or completeness of electronic copies of this plan sheet.

Caltrans now has a web site! To get to the web site, go to http://www.dot.ca.gov

NOTES:

1. Contractor shall install input card. See sheet E-940 for location.
2. Contractor shall wire connection shown by bold lines.

REQUEST FOR INFORMATION NOT ADDRESSED IN THIS CCO REMAIN IN FORCE

MARK	DATE	DESCRIPTIONS	BY	CH'D	CCO#
		REVISIONS			
0	03/08/10	MEP INTEGRATION	JE	FW	110

CONTRACT CHANGE ORDER NO._____
SHEET _____ OF _____

DETAILS
SCADA REMOTE TERMINAL UNIT SYSTEM
RTU #16 WIRING DIAGRAM

NO SCALE

E-947

CALCULATED/ DESIGNED BY	SYC	DATE 01/10	REVISED BY	DATE REVISED
CHECKED BY	FW	01/10		

DESIGN OVERSIGHT
BEHZAD GOLEMOHAMMADI

STATE OF CALIFORNIA - DEPARTMENT OF TRANSPORTATION
Caltrans

THIS PLAN ACCURATE FOR ELECTRICAL WORK ONLY.

LAST REVISION 00-00-00
DATE PLOTTED => 06-MAY-2010
TIME PLOTTED => 19:10

FOR REDUCED PLANS ORIGINAL SCALE IS IN MILLIMETERS 0 20 40 60 80

DGN FILE =>04-0120f1_E-947.dgn
USERNAME =>llorico

CU 04251

EA 0120F1

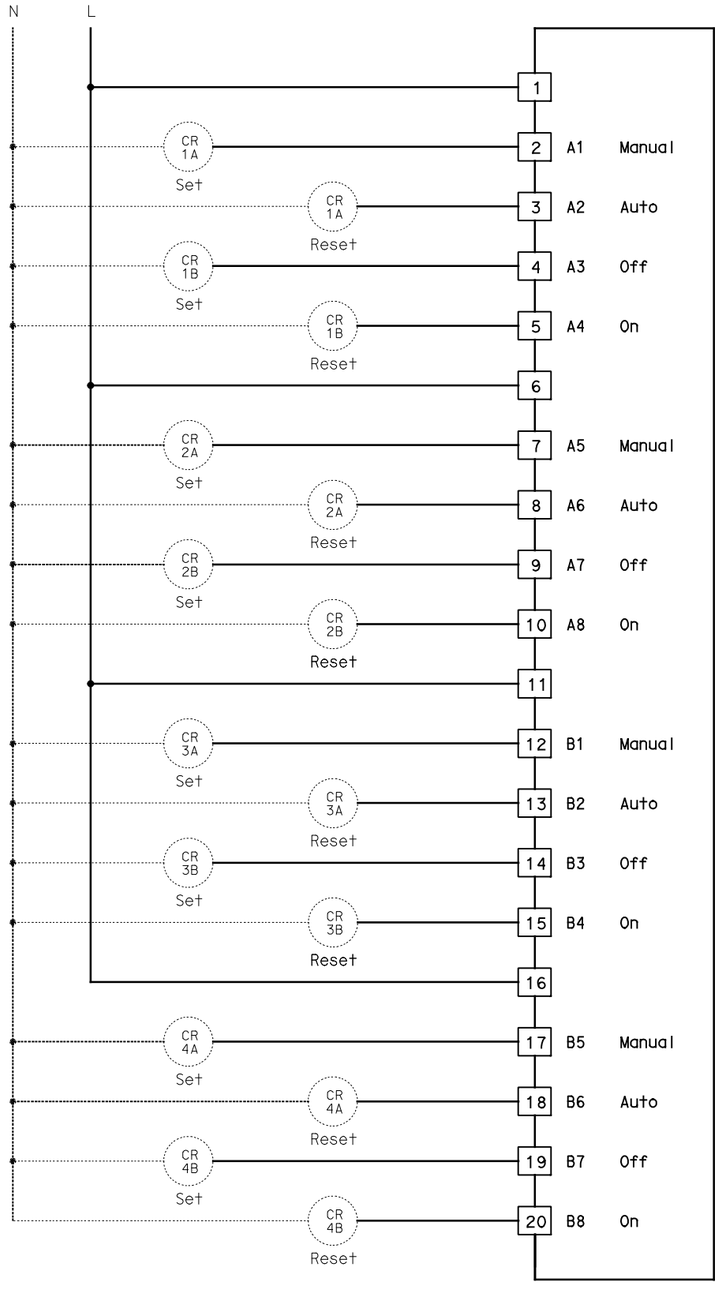

RTU #16

16 POINT DIGITAL OUTPUT
RACK 1, SLOT 10

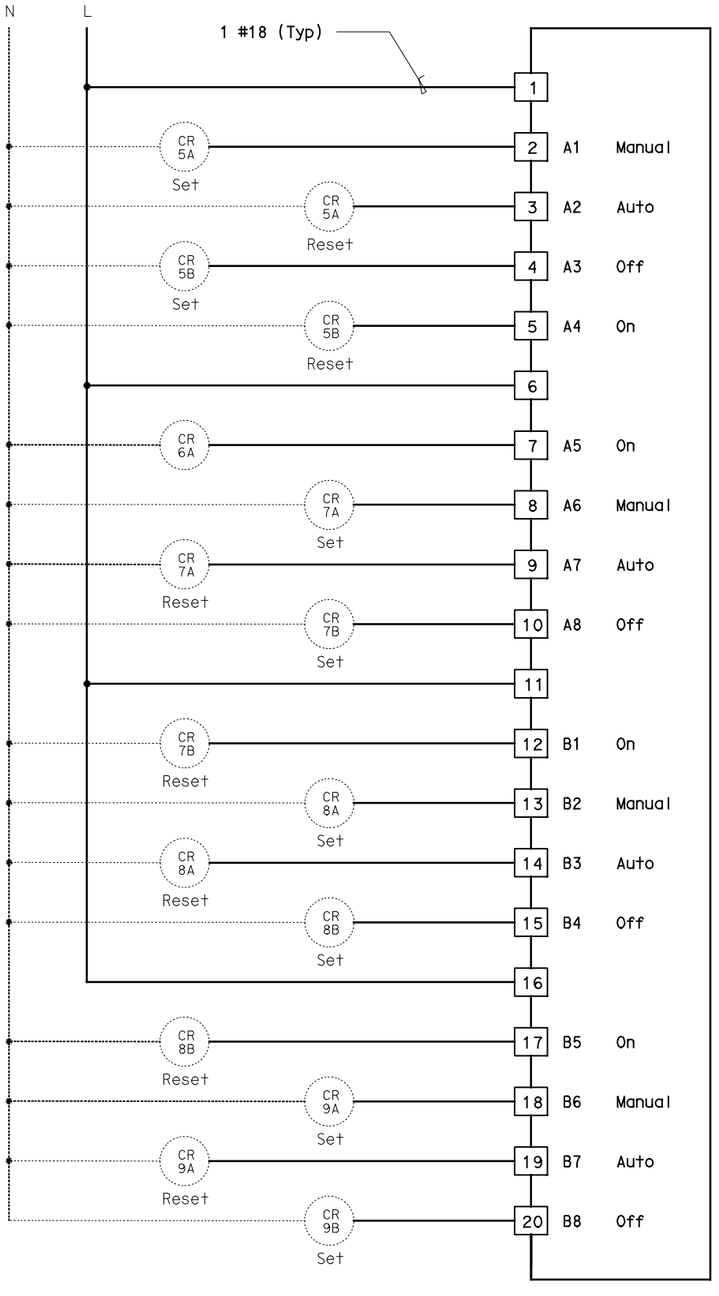

RTU #16

16 POINT DIGITAL OUTPUT
RACK 2, SLOT 1

Caltrans Metric

DIST	COUNTY	ROUTE	KILOMETER POST TOTAL PROJECT	SHEET No	TOTAL SHEETS
04	SF, Ala	80	12.2/14.3 0.0/4.0	407a 09S57	1204

Syn Yee Chin 03/08/10
REGISTERED ELECTRICAL ENGINEER DATE

REGISTERED PROFESSIONAL ENGINEER
SYN YEE CHIN
No. 18186
Exp. 09/30/2011
ELECTRICAL
STATE OF CALIFORNIA

05-06-2010
PLANS APPROVAL DATE

PB AMERICAS, Inc.
A Parsons Brinckerhoff Company
303 Second St., Suite 700N
San Francisco, CA 94107-1317

The State of California or its officers or agents shall not be responsible for the accuracy or completeness of electronic copies of this plan sheet.

Caltrans now has a web site! To get to the web site, go to http://www.dot.ca.gov

NOTES:

1. Contractor shall install output cards. See sheet E-940 for location.
2. Contractor shall wire connection shown by bold lines.

REQUEST FOR INFORMATION NOT ADDRESSED IN THIS CCO REMAIN IN FORCE

MARK	DATE	DESCRIPTIONS	BY	CH'D	CCO#
		REVISIONS			
0	03/08/10	MEP INTEGRATION	JE	FW	110

CONTRACT CHANGE ORDER NO._____
SHEET _____ OF _____

DETAILS
SCADA REMOTE TERMINAL UNIT SYSTEM
RTU #16 WIRING DIAGRAM

NO SCALE

E-948

CALCULATED/ DESIGNED BY	SYC	DATE 01/10	REVISED BY	DATE REVISED
CHECKED BY	FW	01/10		

DESIGN OVERSIGHT
BEHZAD GOLEMOHAMMADI

STATE OF CALIFORNIA - DEPARTMENT OF TRANSPORTATION
Caltrans

LAST REVISION 00-00-00
DATE PLOTTED => 06-MAY-2010
TIME PLOTTED => 19:10

THIS PLAN ACCURATE FOR ELECTRICAL WORK ONLY.

FOR REDUCED PLANS ORIGINAL SCALE IS IN MILLIMETERS 0 20 40 60 80

DGN FILE =>04-0120f1_E-948.dgn
USERNAME =>llorico

CU 04251

EA 0120F1

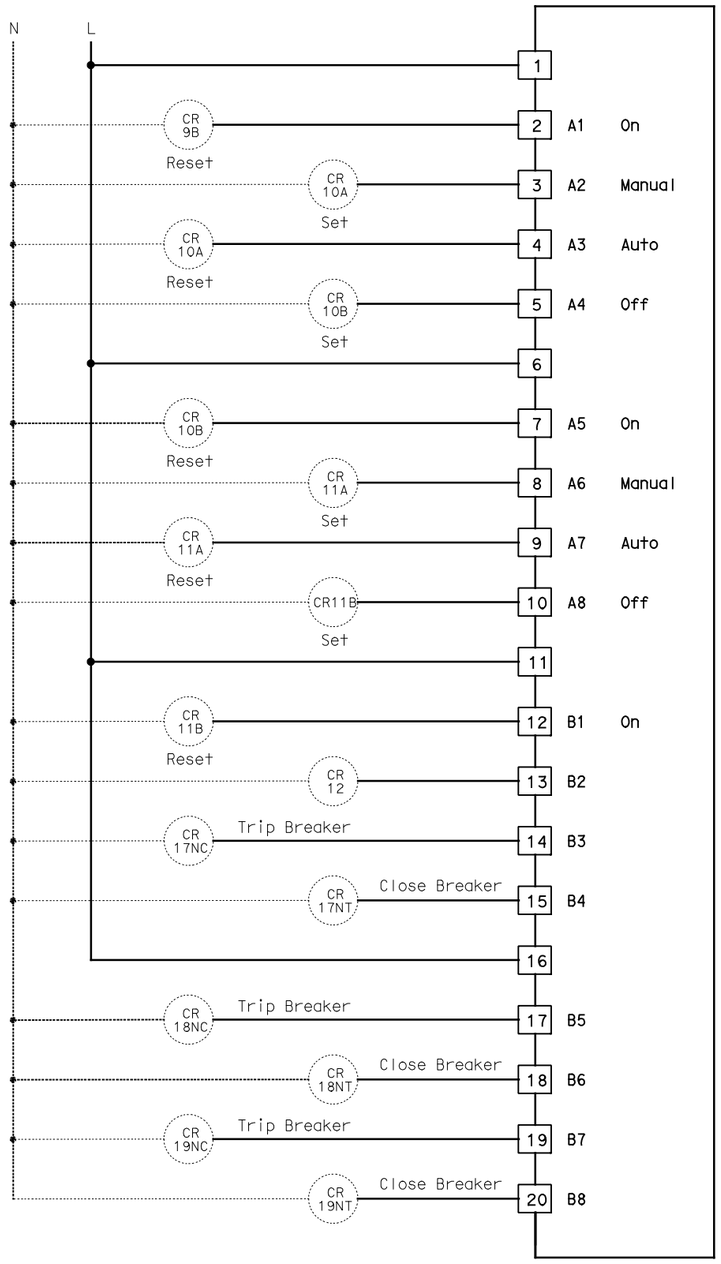

RTU #16

16 POINT DIGITAL OUTPUT
RACK 2, SLOT 2

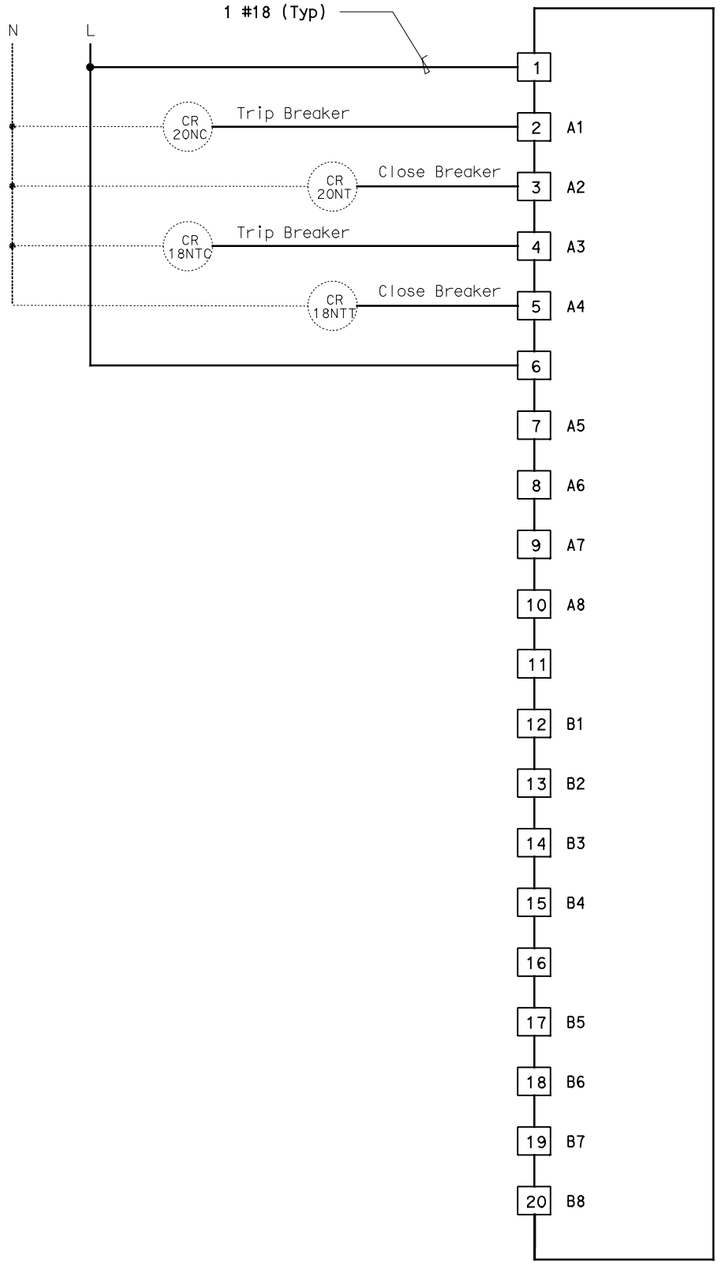

RTU #16

16 POINT DIGITAL OUTPUT
RACK 2, SLOT 3

Caltrans Metric

DIST	COUNTY	ROUTE	KILOMETER POST TOTAL PROJECT	SHEET No	TOTAL SHEETS
04	SF, Ala	80	12.2/14.3 0.0/4.0	407a 09S58	1204

Syn Yee Chin 03/08/10
REGISTERED ELECTRICAL ENGINEER DATE

REGISTERED PROFESSIONAL ENGINEER
SYN YEE CHIN
No. 18186
Exp. 09/30/2011
ELECTRICAL
STATE OF CALIFORNIA

05-06-2010
PLANS APPROVAL DATE

PB AMERICAS, Inc.
A Parsons Brinckerhoff Company
303 Second St., Suite 700N
San Francisco, CA 94107-1317

The State of California or its officers or agents shall not be responsible for the accuracy or completeness of electronic copies of this plan sheet.

Caltrans now has a web site! To get to the web site, go to http://www.dot.ca.gov

NOTES:

1. Contractor shall install output cards. See sheet E-940 for location.
2. Contractor shall wire connection shown by bold lines.

REQUEST FOR INFORMATION NOT ADDRESSED IN THIS CCO REMAIN IN FORCE

MARK	DATE	REVISIONS	BY	CH'D	CCO#
0	03/08/10	MEP INTEGRATION	JE	FW	110

CONTRACT CHANGE ORDER NO. _____
SHEET _____ OF _____

DETAILS
SCADA REMOTE TERMINAL UNIT SYSTEM
RTU #16 WIRING DIAGRAM

NO SCALE

E-949

STATE OF CALIFORNIA - DEPARTMENT OF TRANSPORTATION
Caltrans

DESIGN OVERSIGHT
BEHZAD GOLEMOHAMMADI

CALCULATED/ DESIGNED BY
CHECKED BY

REVISED BY	DATE REVISED
SYC	DATE 01/10
FW	01/10

THIS PLAN ACCURATE FOR ELECTRICAL WORK ONLY.

FOR REDUCED PLANS ORIGINAL SCALE IS IN MILLIMETERS 0 20 40 60 80

DGN FILE =>04-0120f1_E-949.dgn
USERNAME =>llorico

CU 04251

EA 0120F1

LAST REVISION 00-00-00
DATE PLOTTED => 06-MAY-2010
TIME PLOTTED => 19:10

NOTES:

1. This plan sheet is a drawing of the Oakland Touchdown 2 Remote Terminal Unit #16. See sheet E-142 from the Oakland Touchdown 2, contract No. 04-0120M4. The Contractor shall verify the existing installation per the Oakland Touchdown 1 contract No. 04-0120L4.

2. References:
   See sheets E-941.

REQUEST FOR INFORMATION NOT ADDRESSED IN THIS CCO REMAIN IN FORCE

MARK	DATE	DESCRIPTIONS	BY	CH'D	CCO#
		REVISIONS			
0	03/08/10	MEP INTEGRATION	JE	FW	110

CONTRACT CHANGE ORDER NO._____
SHEET_____ OF _____

DIST	COUNTY	ROUTE	KILOMETER POST TOTAL PROJECT	SHEET No	TOTAL SHEETS
04	SF,Ala	80	12.2/14.3 0.0/4.0	407a 09S59	1204

Caltrans Metric

Syn Yee Chin 03/08/10
REGISTERED ELECTRICAL ENGINEER DATE

REGISTERED PROFESSIONAL ENGINEER
SYN YEE CHIN
No. 18186
Exp. 09/30/2011
ELECTRICAL
STATE OF CALIFORNIA

05-06-2010
PLANS APPROVAL DATE

PB AMERICAS, Inc.
A Parsons Brinckerhoff Company
303 Second St., Suite 700N
San Francisco, CA 94107-1317

The State of California or its officers or agents shall not be responsible for the accuracy or completeness of electronic copies of this plan sheet.

Caltrans now has a web site! To get to the web site, go to http://www.dot.ca.gov

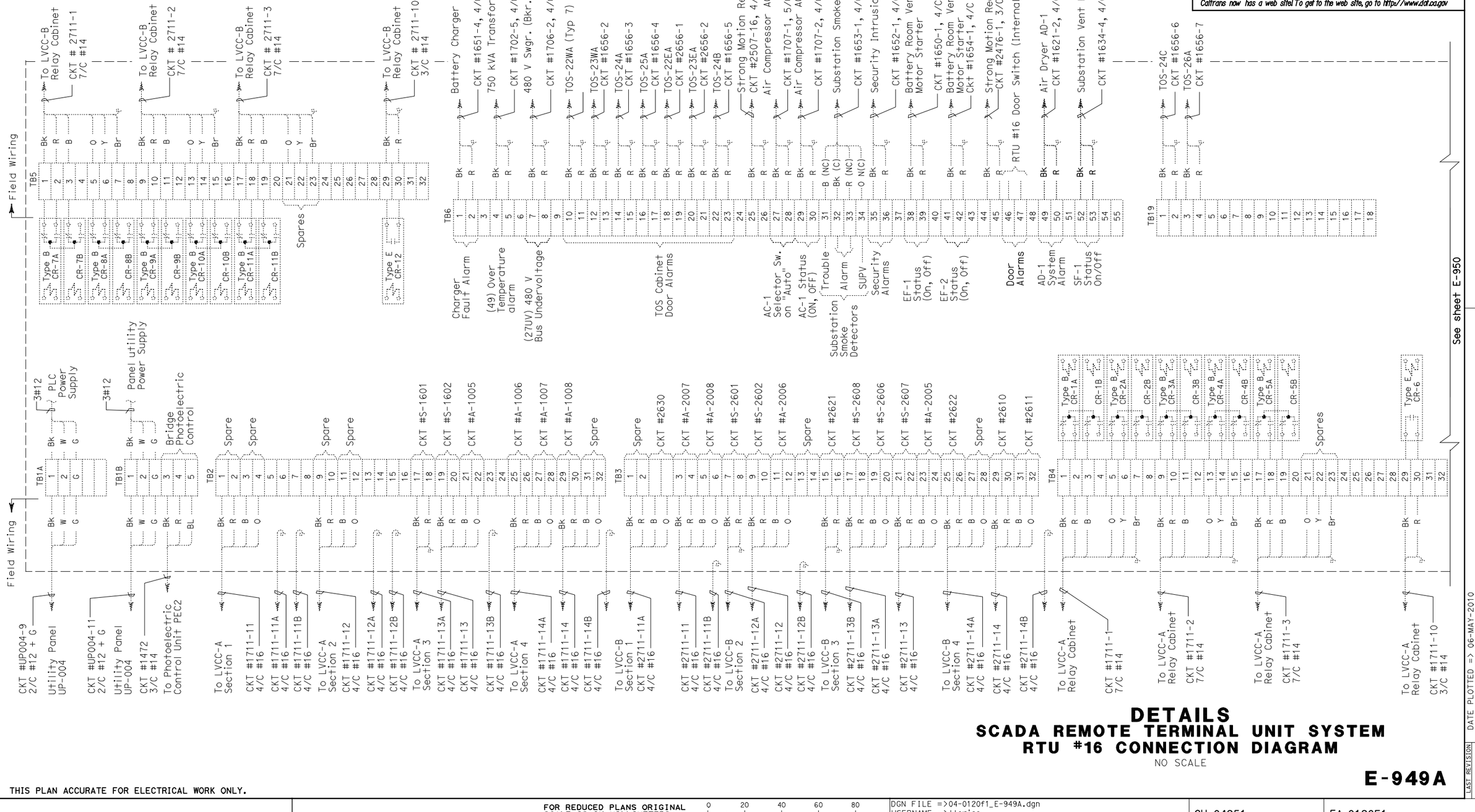

DETAILS
SCADA REMOTE TERMINAL UNIT SYSTEM
RTU #16 CONNECTION DIAGRAM
NO SCALE

E-949A

LAST REVISION 00-00-00 | DATE PLOTTED => 06-MAY-2010 | TIME PLOTTED => 19:10

THIS PLAN ACCURATE FOR ELECTRICAL WORK ONLY.

STATE OF CALIFORNIA - DEPARTMENT OF TRANSPORTATION
Caltrans
DESIGN OVERSIGHT
BEHZAD GOLEMOHAMMADI
CALCULATED/ DESIGNED BY
CHECKED JENS ERLINGSSON
SYC
DATE 01/10
REVISED BY

FOR REDUCED PLANS ORIGINAL SCALE IS IN MILLIMETERS 0 20 40 60 80

DGN FILE =>04-0120f1_E-949A.dgn
USERNAME =>llorico

CU 04251

EA 0120F1

DIST	COUNTY	ROUTE	KILOMETER POST TOTAL PROJECT	SHEET No	TOTAL SHEETS
04	SF,Ala	80	12.2/14.3 0.0/4.0	407a 09S60	1204

Syn Yee Chin 03/08/10
REGISTERED ELECTRICAL ENGINEER DATE

05-06-2010
PLANS APPROVAL DATE

REGISTERED PROFESSIONAL ENGINEER
SYN YEE CHIN
No. 18186
Exp. 09/30/2011
ELECTRICAL
STATE OF CALIFORNIA

PB AMERICAS, Inc.
A Parsons Brinckerhoff Company
303 Second St., Suite 700N
San Francisco, CA 94107-1317

The State of California or its officers or agents shall not be responsible for the accuracy or completeness of electronic copies of this plan sheet.

Caltrans now has a web site! To get to the web site, go to http://www.dot.ca.gov

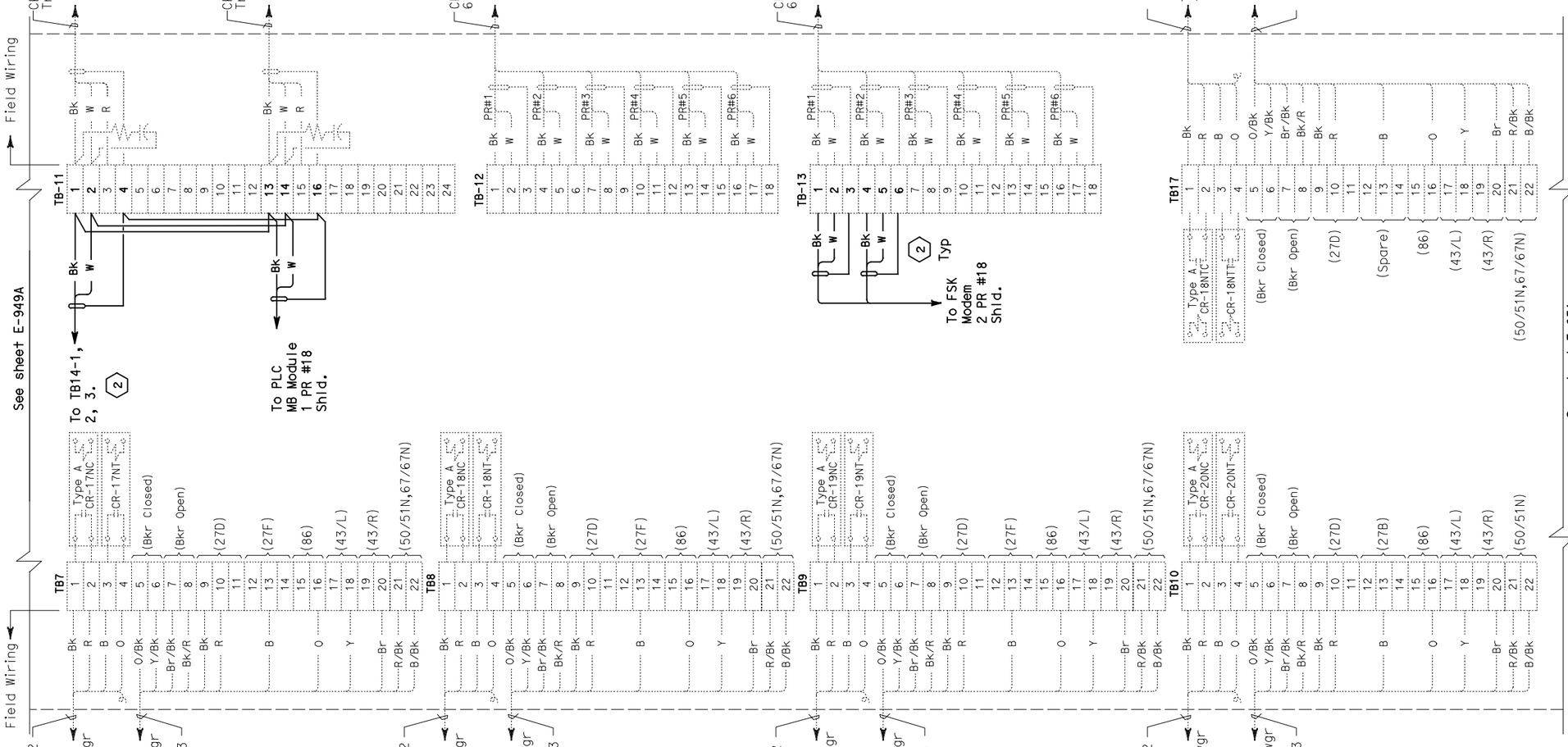

NOTES:

1. This plan Sheet is a record drawing of the Oakland Touchdown 1 Remote Terminal Unit #16. The Contractor shall verify the existing installation. See sheet E-157 from the Oakland Touchdown 1 contract No. 04-0120L4.
2. References:
   See sheets E-941.
3. Contractor shall wire connection shown by bold lines.

SHEET NOTES:

(1) Verify that the shield is not grounded.

(2) Do not ground shield.

REQUEST FOR INFORMATION NOT ADDRESSED IN THIS CCO REMAIN IN FORCE					
MARK	DATE	REVISIONS DESCRIPTIONS	BY	CH'D	CCO#
0	03/08/10	MEP INTEGRATION	JE	FW	110

CONTRACT CHANGE ORDER NO._____
SHEET _____ OF _____

DETAILS
SCADA REMOTE TERMINAL UNIT SYSTEM
RTU #16 CONNECTION DIAGRAM
NO SCALE

E-950

STATE OF CALIFORNIA - DEPARTMENT OF TRANSPORTATION	CALCULATED/ DESIGNED BY	DESIGN OVERSIGHT
Caltrans	CHECKED BY	BEHZAD GOLEMOHAMMADI

SYC	DATE 01/10	REVISED BY
FW	01/10	DATE REVISED

THIS PLAN ACCURATE FOR ELECTRICAL WORK ONLY.

FOR REDUCED PLANS ORIGINAL SCALE IS IN MILLIMETERS 0 20 40 60 80

DGN FILE =>04-0120f1_E-950.dgn
USERNAME =>llorico

CU 04251 EA 0120F1

LAST REVISION 00-00-00
DATE PLOTTED => 06-MAY-2010
TIME PLOTTED => 19:10

DIST	COUNTY	ROUTE	KILOMETER POST TOTAL PROJECT	SHEET No	TOTAL SHEETS
04	SF,Ala	80	12.2/14.3 0.0/4.0	407a 09S61	1204

Syn Yee Chin 03/08/10
REGISTERED ELECTRICAL ENGINEER DATE

05-06-2010
PLANS APPROVAL DATE

REGISTERED PROFESSIONAL ENGINEER SYN YEE CHIN No. 18186 Exp. 09/30/2011 ELECTRICAL STATE OF CALIFORNIA

PB AMERICAS, Inc.
A Parsons Brinckerhoff Company
303 Second St., Suite 700N
San Francisco, CA 94107-1317

The State of California or its officers or agents shall not be responsible for the accuracy or completeness of electronic copies of this plan sheet.

Caltrans now has a web site! To get to the web site, go to http://www.dot.ca.gov

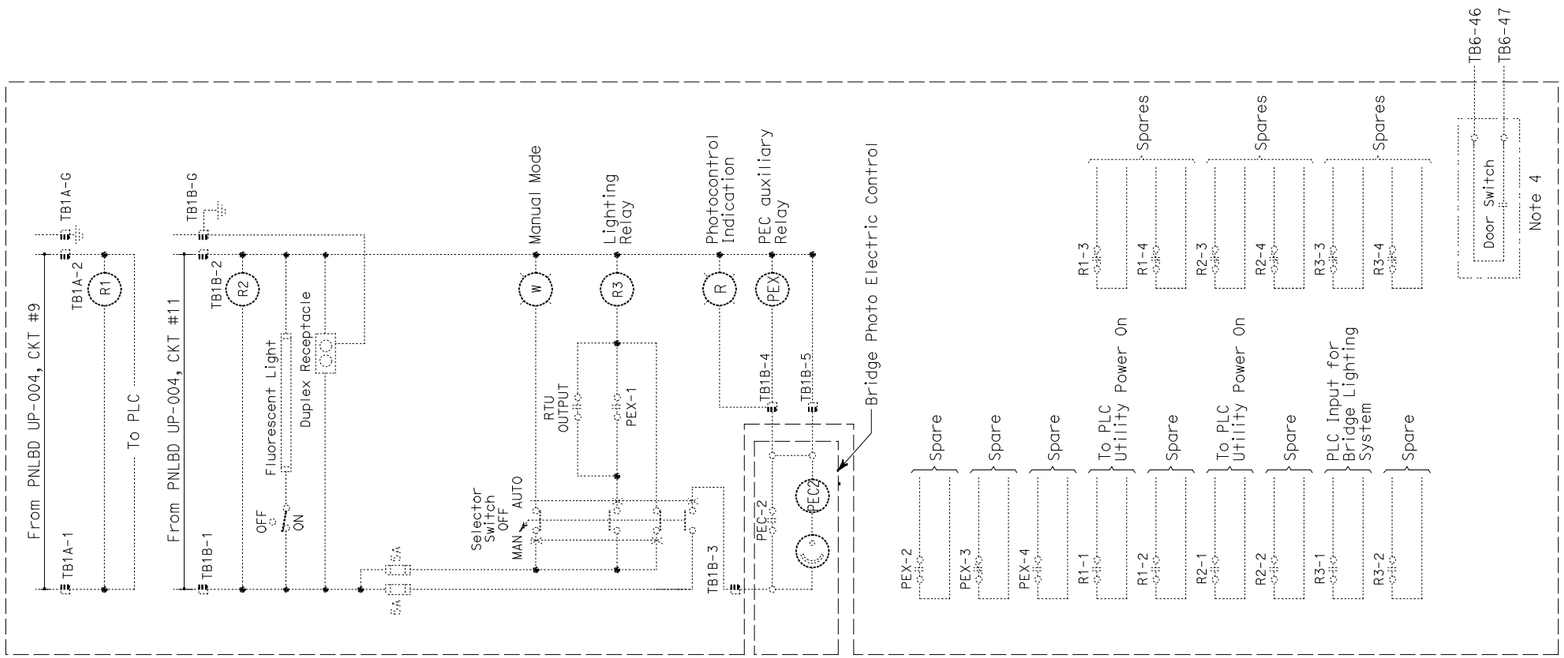

ELEMENTARY DIAGRAM - RTU #16

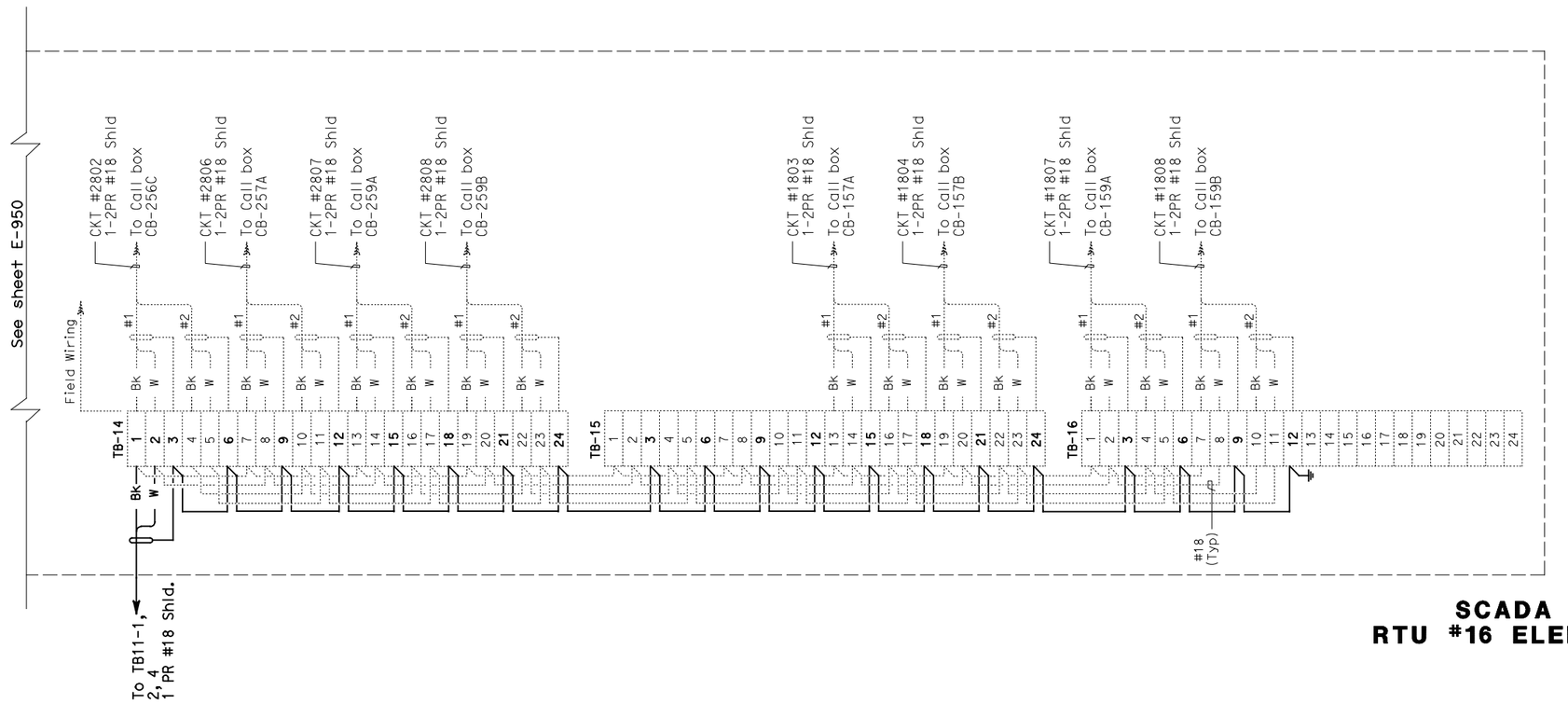

CONNECTION DIAGRAM

NOTES:

1. This plan Sheet is a drawing of the Oakland Touchdown 2 Remote Terminal Unit #16. See sheet E-141 from the Oakland Touchdown 2, contract No. 04-0120M4. The Contractor shall verify the existing installation per the Oakland Touchdown 1 contract No. 04-0120L4.
2. References: See sheets E-941.
3. Contractor shall wire connection shown by bold lines.

REQUEST FOR INFORMATION NOT ADDRESSED IN THIS CCO REMAIN IN FORCE					
0	03/08/10	MEP INTEGRATION	JE	FW	110
MARK	DATE	DESCRIPTIONS	BY	CH'D	CCO#
REVISIONS					

CONTRACT CHANGE ORDER NO._____
SHEET_____ OF _____

DETAILS
SCADA REMOTE TERMINAL UNIT SYSTEM
RTU #16 ELEMENTARY AND CONNECTION DIAGRAMS
NO SCALE

E-951

STATE OF CALIFORNIA - DEPARTMENT OF TRANSPORTATION
Caltrans

DESIGN OVERSIGHT
BEHZAD GOLEMOHAMMADI

CALCULATED/DESIGNED BY SYC DATE 01/10 REVISED BY
CHECKED BY FW 01/10 DATE REVISED

THIS PLAN ACCURATE FOR ELECTRICAL WORK ONLY.

FOR REDUCED PLANS ORIGINAL SCALE IS IN MILLIMETERS 0 20 40 60 80

DGN FILE =>04-0120f1_E-951.dgn
USERNAME =>llorico

CU 04251 EA 0120F1

LAST REVISION 00-00-00
DATE PLOTTED => 06-MAY-2010
TIME PLOTTED => 19:10

DIST	COUNTY	ROUTE	KILOMETER POST TOTAL PROJECT	SHEET No	TOTAL SHEETS
04	SF,Ala	80	12.2/14.3 0.0/4.0	407a 09S62	1204

Syn Yee Chin 03/08/10
REGISTERED ELECTRICAL ENGINEER DATE

05-06-2010
PLANS APPROVAL DATE

REGISTERED PROFESSIONAL ENGINEER
SYN YEE CHIN
No. 18186
Exp. 09/30/2011
ELECTRICAL
STATE OF CALIFORNIA

PB AMERICAS, Inc.
A Parsons Brinckerhoff Company
303 Second St., Suite 700N
San Francisco, CA 94107-1317

The State of California or its officers or agents shall not be responsible for the accuracy or completeness of electronic copies of this plan sheet.

Caltrans now has a web site! To get to the web site, go to http://www.dot.ca.gov

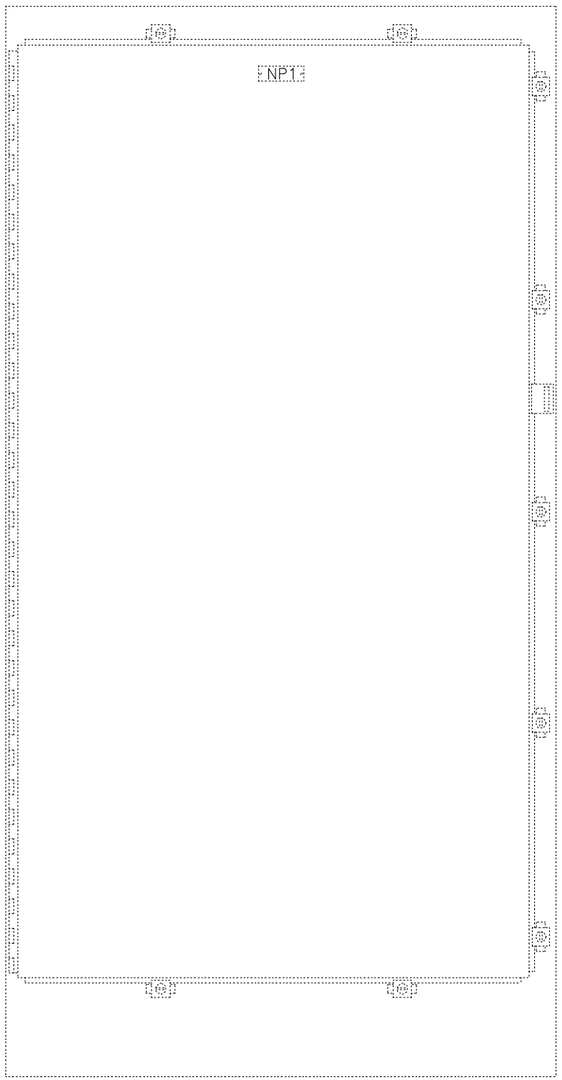

EXTERIOR

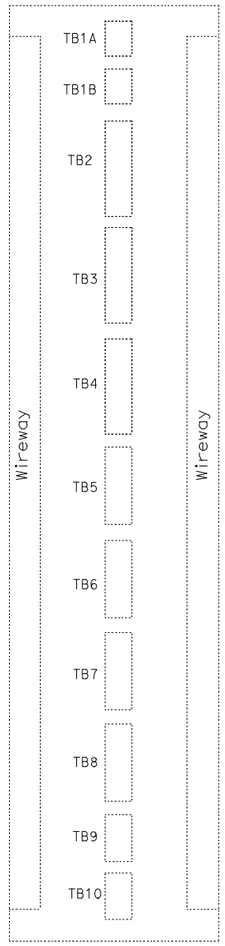

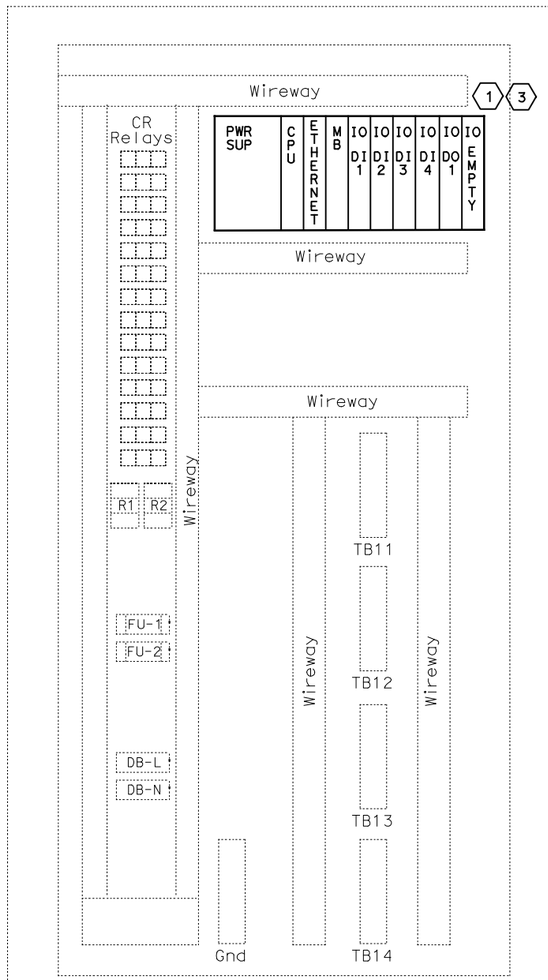

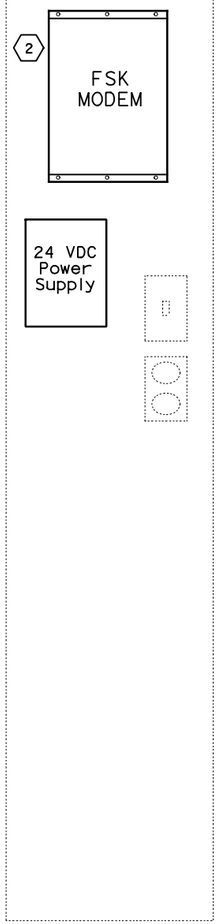

INTERIOR

NOTES:

1. Refer to the special provisions for the PLC and FSK Modem requirements.
2. For RTU wiring see the following sheets, E-953 through E-958.

SHEET NOTES:

1. Contractor shall furnish and install a new GE Fanuc PAC Systems RX3i PLC in the existing RTU.
2. Contractor shall provide and install a new Frequency Shift Key (FSK) modem and 120v (AC) to 21v-28v (DC) power supply in the existing RTU.
3. Contractor shall install the input and output cards.

REQUEST FOR INFORMATION NOT ADDRESSED IN THIS CCO REMAIN IN FORCE

MARK	DATE	DESCRIPTIONS	BY	CH'D	CCO#
		REVISIONS			
0	03/08/10	MEP INTEGRATION	JE	FW	110

CONTRACT CHANGE ORDER NO._____
SHEET _____ OF _____

DETAILS
SCADA REMOTE TERMINAL UNIT SYSTEM
RTU #17 ASSEMBLY
NO SCALE

E-952

STATE OF CALIFORNIA - DEPARTMENT OF TRANSPORTATION
DESIGN OVERSIGHT
BEHZAD GOLEMOHAMMADI
CALCULATED/ DESIGNED BY
CHECKED BY
SYC FW
DATE 01/10 01/10
REVISED BY DATE REVISED

THIS PLAN ACCURATE FOR ELECTRICAL WORK ONLY.

FOR REDUCED PLANS ORIGINAL SCALE IS IN MILLIMETERS 0 20 40 60 80

DGN FILE =>04-0120f1_E-952.dgn
USERNAME =>llorico

CU 04251 EA 0120F1

LAST REVISION 00-00-00
DATE PLOTTED => 06-MAY-2010
TIME PLOTTED => 19:11

DIST	COUNTY	ROUTE	KILOMETER POST TOTAL PROJECT	SHEET No	TOTAL SHEETS
04	SF, Ala	80	12.2/14.3 0.0/4.0	407a 09S63	1204

Syn Yee Chin 03/08/10
REGISTERED ELECTRICAL ENGINEER DATE

05-06-2010
PLANS APPROVAL DATE

REGISTERED PROFESSIONAL ENGINEER
SYN YEE CHIN
No. 18186
Exp. 09/30/2011
ELECTRICAL
STATE OF CALIFORNIA

PB AMERICAS, Inc.
A Parsons Brinckerhoff Company
303 Second St., Suite 700N
San Francisco, CA 94107-1317

The State of California or its officers or agents shall not be responsible for the accuracy or completeness of electronic copies of this plan sheet.

Caltrans now has a web site! To get to the web site, go to http://www.dot.ca.gov

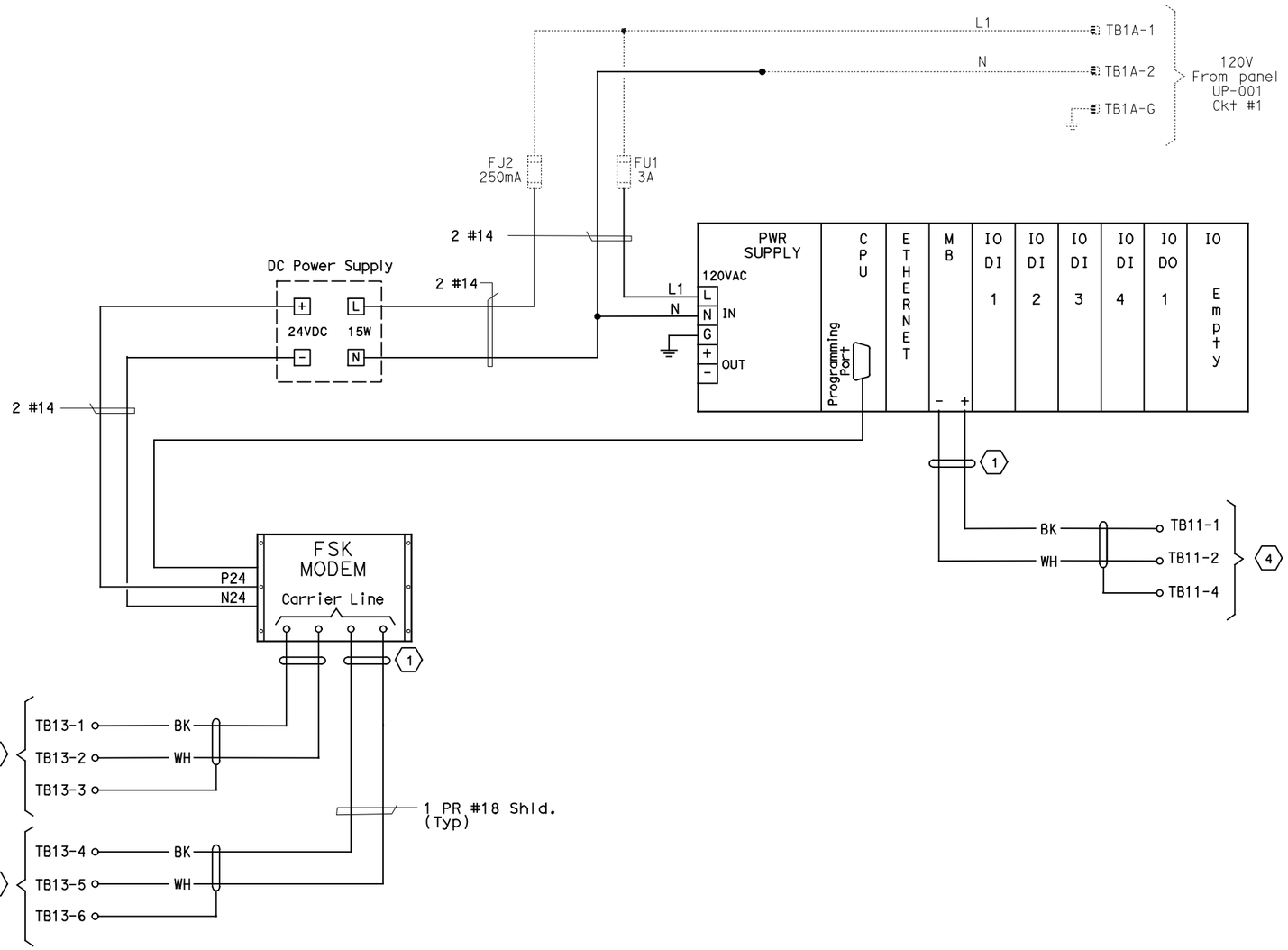

RTU #17 WIRING DIAGRAM

NOTES:

1. For RTU wiring see sheets E-954 through E-958.
2. For FSK Modems interconnect wiring, see sheet E-902.
3. Contractor shall wire connection shown by bold lines.

SHEET NOTES:

(1) Contractor to tape shield. This circuit is not to be grounded at this end.

(2) Pair 7 of 50 pair SCADA cable.

(3) Pair 8 of 50 pair SCADA cable.

(4) To management relay communication cable, see sheet E-958A.

REQUEST FOR INFORMATION NOT ADDRESSED IN THIS CCO REMAIN IN FORCE

MARK	DATE	DESCRIPTIONS	BY	CH'D	CCO#
		REVISIONS			
0	04/19/10	MEP INTEGRATION	JE	FW	110

CONTRACT CHANGE ORDER NO._____
SHEET _____ OF _____

DETAILS
SCADA REMOTE TERMINAL UNIT SYSTEM
RTU #17 WIRING DIAGRAM
NO SCALE

E-953

CALCULATED/ DESIGNED BY	SYC	DATE 01/10	REVISED BY
CHECKED BY	FW	01/10	DATE REVISED

DESIGN OVERSIGHT
BEHZAD GOLEMOHAMMADI

STATE OF CALIFORNIA - DEPARTMENT OF TRANSPORTATION
Caltrans

THIS PLAN ACCURATE FOR ELECTRICAL WORK ONLY.

FOR REDUCED PLANS ORIGINAL SCALE IS IN MILLIMETERS 0 20 40 60 80

DGN FILE =>04-0120f1_E-953.dgn
USERNAME =>llorico

CU 04251

EA 0120F1

LAST REVISION 00-00-00
DATE PLOTTED => 06-MAY-2010
TIME PLOTTED => 19:11

DIST	COUNTY	ROUTE	KILOMETER POST TOTAL PROJECT	SHEET No	TOTAL SHEETS
04	SF,Ala	80	12.2/14.3 0.0/4.0	407a 09S64	1204

Caltrans Metric

Syn Yee Chin 03/08/10
REGISTERED ELECTRICAL ENGINEER DATE

05-06-2010
PLANS APPROVAL DATE

REGISTERED PROFESSIONAL ENGINEER
SYN YEE CHIN
No. 18186
Exp. 09/30/2011
ELECTRICAL
STATE OF CALIFORNIA

PB AMERICAS, Inc.
A Parsons Brinckerhoff Company
303 Second St., Suite 700N
San Francisco, CA 94107-1317

The State of California or its officers or agents shall not be responsible for the accuracy or completeness of electronic copies of this plan sheet.

Caltrans now has a web site! To get to the web site, go to http://www.dot.ca.gov

THIS SHEET IS INTENTIONALLY LEFT BLANK

STATE OF CALIFORNIA - DEPARTMENT OF TRANSPORTATION
Caltrans

DESIGN OVERSIGHT
BEHZAD GOLEMOHAMMADI

CALCULATED/DESIGNED BY SYC DATE 01/10 REVISED BY
CHECKED BY FW 01/10 DATE REVISED

THIS PLAN ACCURATE FOR ELECTRICAL WORK ONLY.

E-954

LAST REVISION 00-00-00
DATE PLOTTED => 06-MAY-2010
TIME PLOTTED => 19:11

FOR REDUCED PLANS ORIGINAL SCALE IS IN MILLIMETERS 0 20 40 60 80

DGN FILE =>04-0120f1_E-954.dgn
USERNAME =>llorico

CU 04251

EA 0120F1

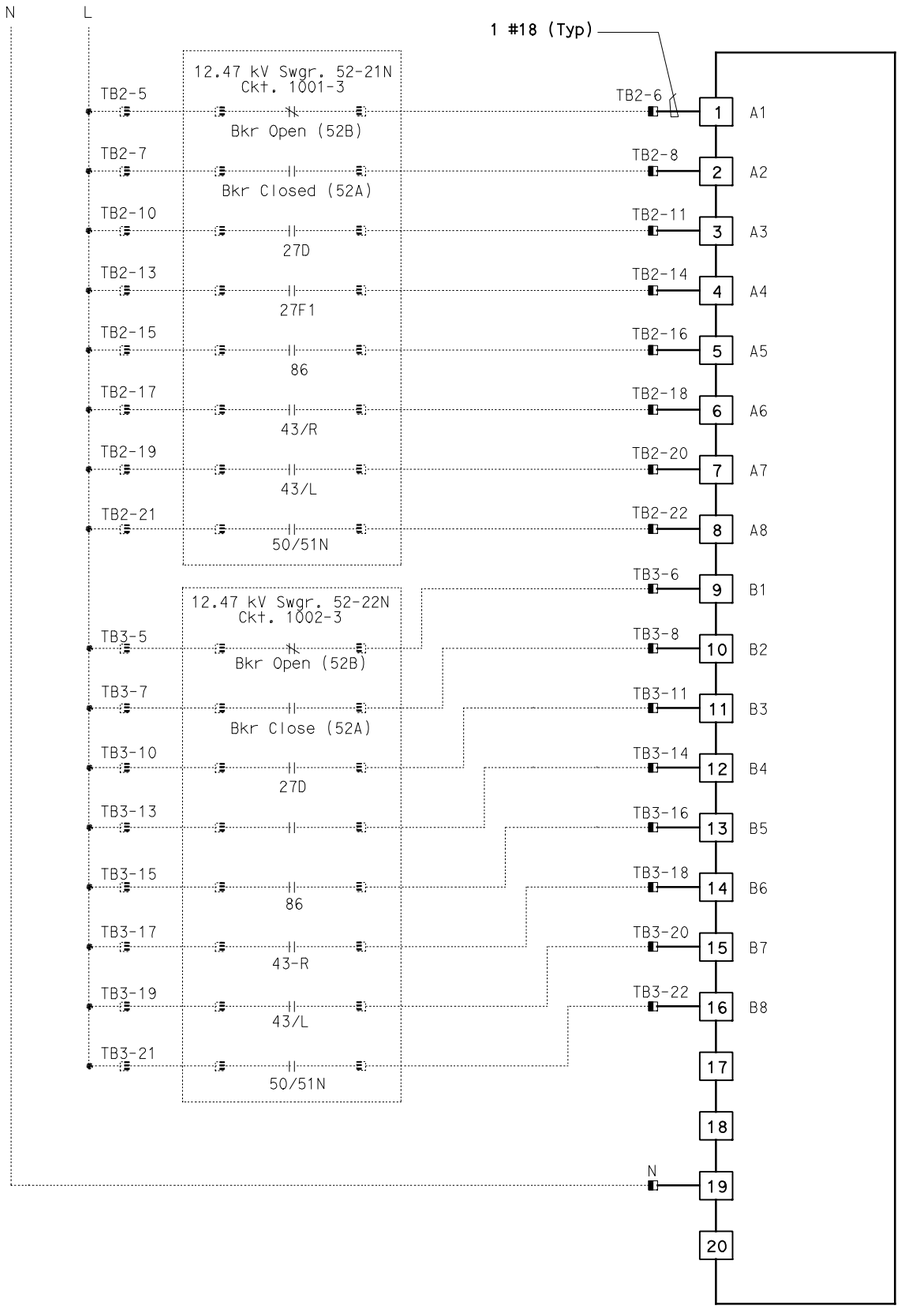

RTU #17

16 POINT DIGITAL INPUT
RACK 1, SLOT 4

DIST	COUNTY	ROUTE	KILOMETER POST TOTAL PROJECT	SHEET No	TOTAL SHEETS
04	SF, Ala	80	12.2/14.3 0.0/4.0	407a 09S65	1204

Syn Yee Chin 03/08/10
REGISTERED ELECTRICAL ENGINEER DATE

05-06-2010
PLANS APPROVAL DATE

REGISTERED PROFESSIONAL ENGINEER
SYN YEE CHIN
No. 18186
Exp. 09/30/2011
ELECTRICAL
STATE OF CALIFORNIA

PB AMERICAS, Inc.
A Parsons Brinckerhoff Company
303 Second St., Suite 700N
San Francisco, CA 94107-1317

The State of California or its officers or agents shall not be responsible for the accuracy or completeness of electronic copies of this plan sheet.

Caltrans now has a web site! To get to the web site, go to http://www.dot.ca.gov

NOTES:

1. Contractor shall install input card. See sheet E-952 for location.
2. Contractor shall wire connection shown by bold lines.

REQUEST FOR INFORMATION NOT ADDRESSED IN THIS CCO REMAIN IN FORCE

MARK	DATE	DESCRIPTIONS	BY	CH'D	CCO#
		REVISIONS			
0	03/08/10	MEP INTEGRATION	JE	FW	110

CONTRACT CHANGE ORDER NO._____
SHEET _____ OF _____

DETAILS
SCADA REMOTE TERMINAL UNIT SYSTEM
RTU #17 WIRING DIAGRAM

NO SCALE

E-955

DESIGN OVERSIGHT BEHZAD GOLEMOHAMMADI
CALCULATED/DESIGNED BY
CHECKED BY
SYC FW
DATE 01/10 01/10
REVISED BY DATE REVISED
STATE OF CALIFORNIA - DEPARTMENT OF TRANSPORTATION
Caltrans

THIS PLAN ACCURATE FOR ELECTRICAL WORK ONLY.

LAST REVISION 00-00-00
DATE PLOTTED => 06-MAY-2010
TIME PLOTTED => 19:11

FOR REDUCED PLANS ORIGINAL SCALE IS IN MILLIMETERS 0 20 40 60 80

DGN FILE =>04-0120f1_E-955.dgn
USERNAME =>llorico

CU 04251

EA 0120F1

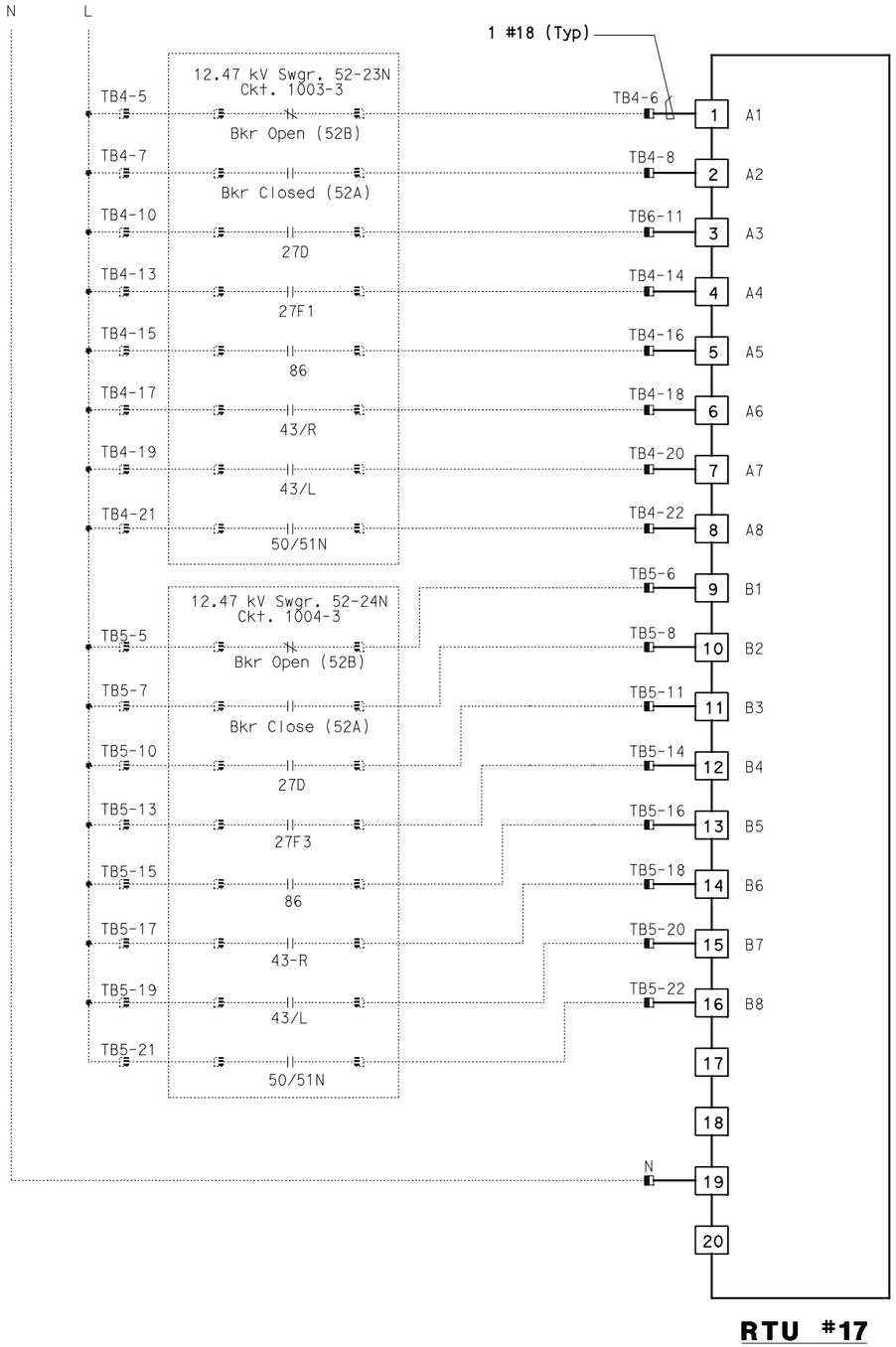

RTU #17

16 POINT DIGITAL INPUT
RACK 1, SLOT 5

DIST	COUNTY	ROUTE	KILOMETER POST TOTAL PROJECT	SHEET No	TOTAL SHEETS
04	SF, Ala	80	12.2/14.3 0.0/4.0	407a 09S66	1204

Syn Yee Chin 03/08/10
REGISTERED ELECTRICAL ENGINEER DATE

05-06-2010
PLANS APPROVAL DATE

REGISTERED PROFESSIONAL ENGINEER
SYN YEE CHIN
No. 18186
Exp. 09/30/2011
ELECTRICAL
STATE OF CALIFORNIA

PB AMERICAS, Inc.
A Parsons Brinckerhoff Company
303 Second St., Suite 700N
San Francisco, CA 94107-1317

The State of California or its officers or agents shall not be responsible for the accuracy or completeness of electronic copies of this plan sheet.

Caltrans now has a web site! To get to the web site, go to http://www.dot.ca.gov

NOTES:

1. Contractor shall install input card. See sheet E-952 for location.
2. Contractor shall wire connection shown by bold lines.

REQUEST FOR INFORMATION NOT ADDRESSED IN THIS CCO REMAIN IN FORCE

MARK	DATE	DESCRIPTIONS	BY	CH'D	CCO#
		REVISIONS			
0	03/08/10	MEP INTEGRATION	JE	SYC	110

CONTRACT CHANGE ORDER NO._____
SHEET _____ OF _____

DETAILS
SCADA REMOTE TERMINAL UNIT SYSTEM
RTU #17 WIRING DIAGRAM

NO SCALE

E-956

DESIGNED BY	CALCULATED BY	CHECKED BY	DRAWN BY	REVISED BY	DATE REVISED
BEHZAD GOLEMOHAMMADI			SYC		01/10

DESIGN OVERSIGHT

STATE OF CALIFORNIA - DEPARTMENT OF TRANSPORTATION
Caltrans

THIS PLAN ACCURATE FOR ELECTRICAL WORK ONLY.

LAST REVISION 00-00-00
DATE PLOTTED => 06-MAY-2010
TIME PLOTTED => 19:11

FOR REDUCED PLANS ORIGINAL SCALE IS IN MILLIMETERS 0 20 40 60 80

DGN FILE =>04-0120f1_E-956.dgn
USERNAME =>llorico

CU 04251

EA 0120F1

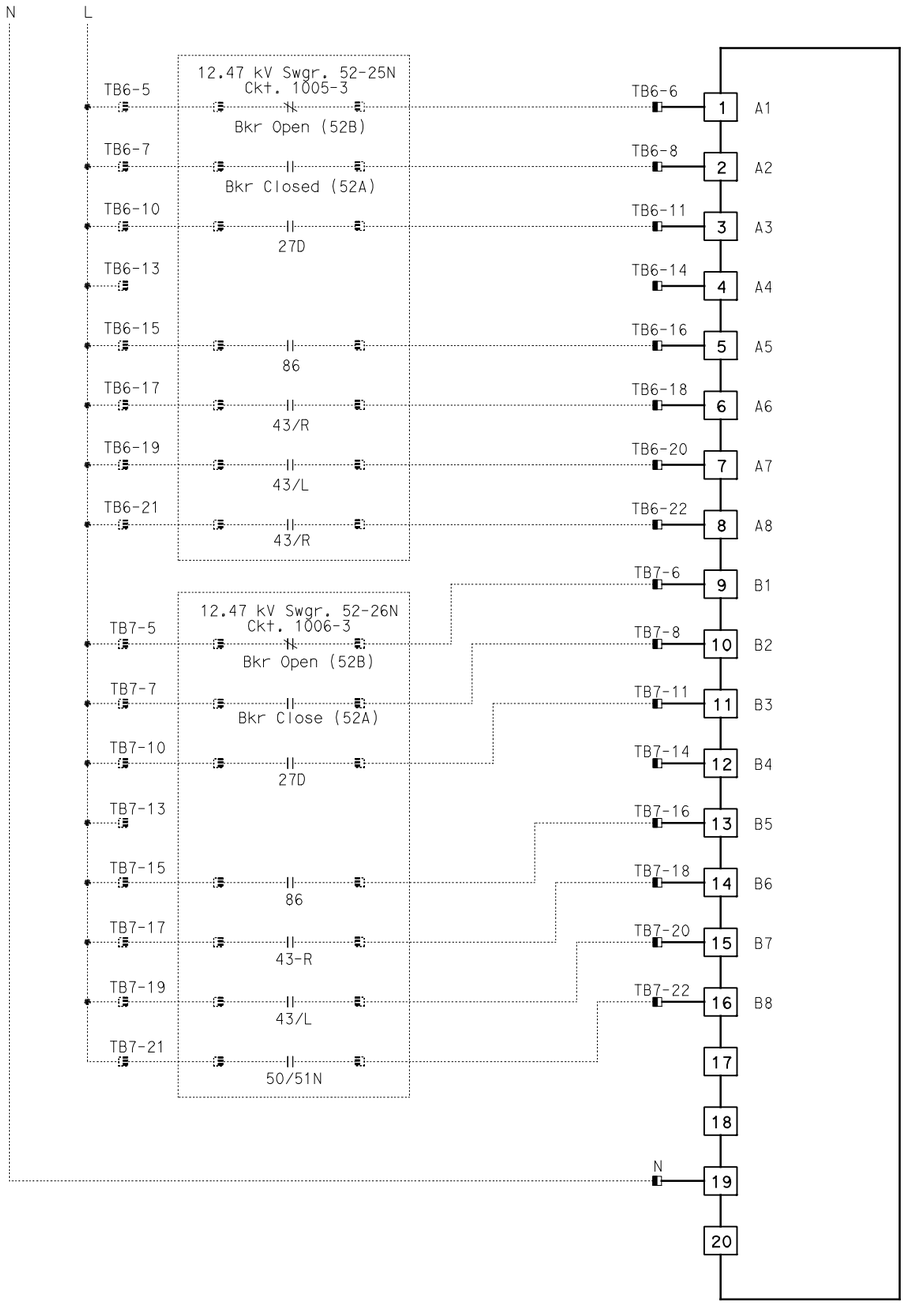

RTU #17

16 POINT DIGITAL INPUT
RACK 1, SLOT 6

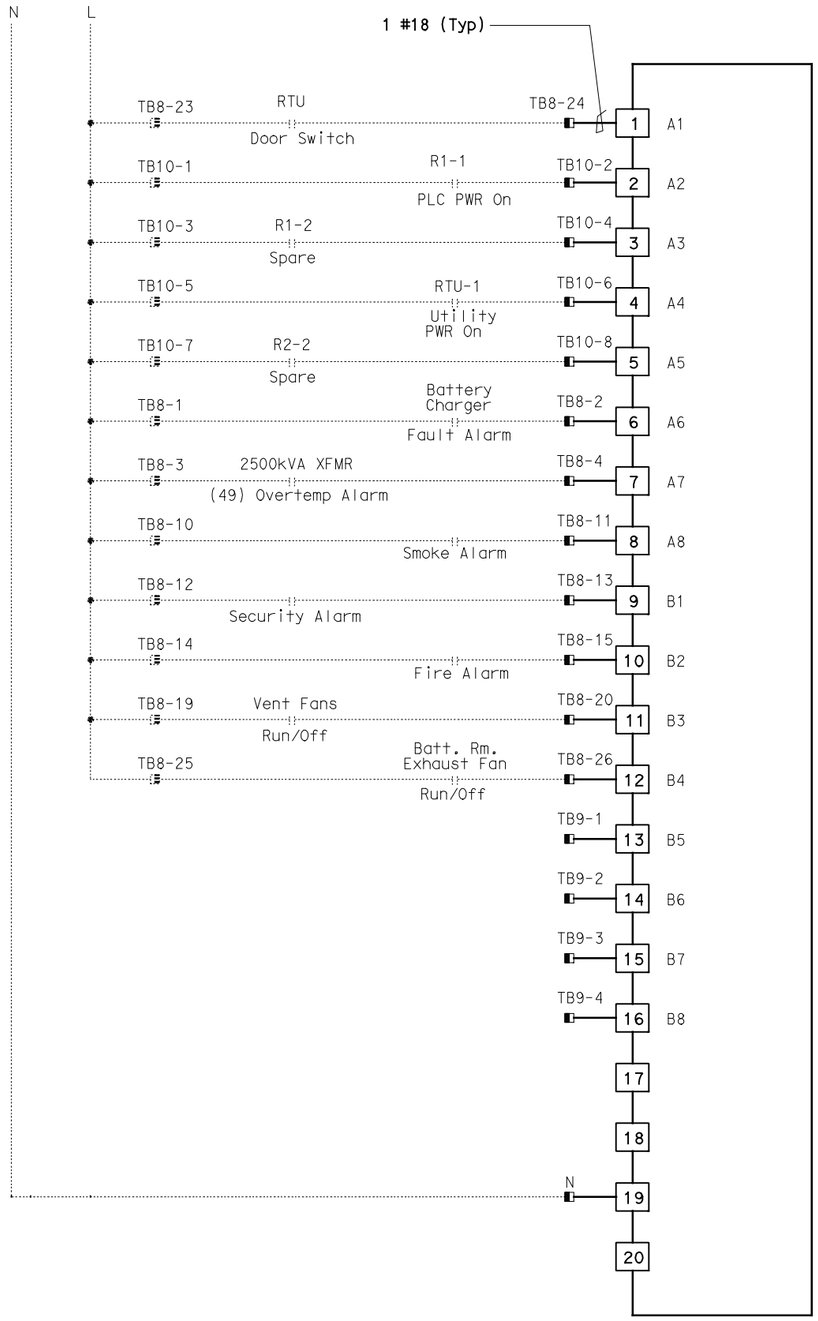

RTU #17

16 POINT DIGITAL INPUT
RACK 1, SLOT 7

Caltrans Metric

DIST	COUNTY	ROUTE	KILOMETER POST TOTAL PROJECT	SHEET No	TOTAL SHEETS
04	SF,Ala	80	12.2/14.3 0.0/4.0	407a 09S67	1204

Syn Yee Chin 03/08/10
REGISTERED ELECTRICAL ENGINEER DATE

REGISTERED PROFESSIONAL ENGINEER
SYN YEE CHIN
No. 18186
Exp. 09/30/2011
ELECTRICAL
STATE OF CALIFORNIA

05-06-2010
PLANS APPROVAL DATE

PB AMERICAS, Inc.
A Parsons Brinckerhoff Company
303 Second St., Suite 700N
San Francisco, CA 94107-1317

The State of California or its officers or agents shall not be responsible for the accuracy or completeness of electronic copies of this plan sheet.

Caltrans now has a web site! To get to the web site, go to http://www.dot.ca.gov

NOTES:

1. Contractor shall install input cards. See sheet E-952 for location.
2. Contractor shall wire connection shown by bold lines.

REQUEST FOR INFORMATION NOT ADDRESSED IN THIS CCO REMAIN IN FORCE

MARK	DATE	DESCRIPTIONS	BY	CH'D	CCO#
		REVISIONS			
0	03/08/10	MEP INTEGRATION	JE	SYC	110

CONTRACT CHANGE ORDER NO._____
SHEET _____ OF _____

DETAILS
SCADA REMOTE TERMINAL UNIT SYSTEM
RTU #17 WIRING DIAGRAM

NO SCALE

E-957

CALCULATED/ DESIGNED BY	SYC	DATE 01/10	REVISED BY	DATE REVISED
CHECKED BY	FW	01/10		

DESIGN OVERSIGHT
BEHZAD GOLEMOHAMMADI

STATE OF CALIFORNIA - DEPARTMENT OF TRANSPORTATION
Caltrans

LAST REVISION 00-00-00
DATE PLOTTED => 06-MAY-2010
TIME PLOTTED => 19:11

THIS PLAN ACCURATE FOR ELECTRICAL WORK ONLY.

FOR REDUCED PLANS ORIGINAL SCALE IS IN MILLIMETERS 0 20 40 60 80

DGN FILE =>04-0120f1_E-957.dgn
USERNAME =>llorico

CU 04251

EA 0120F1

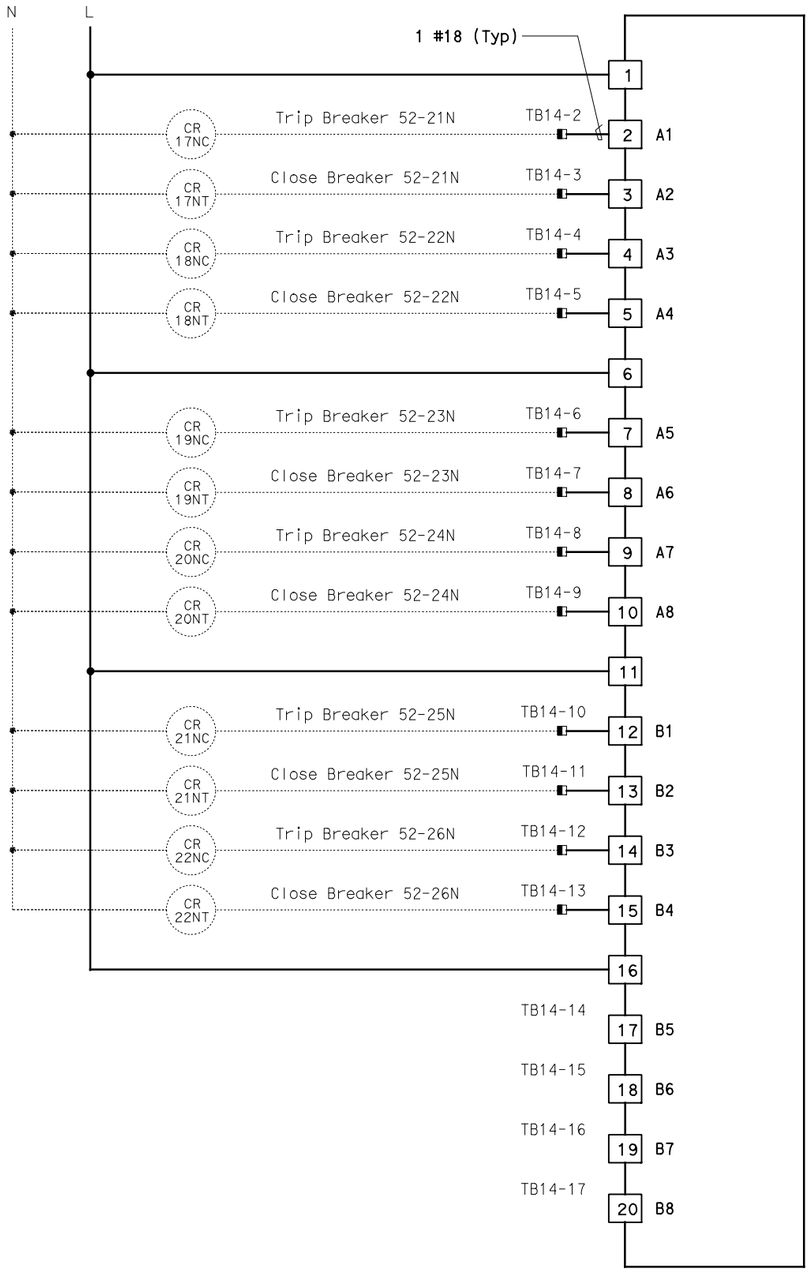

RTU #17

16 POINT DIGITAL OUTPUT
RACK 1, SLOT 8

Caltrans Metric

DIST	COUNTY	ROUTE	KILOMETER POST TOTAL PROJECT	SHEET No	TOTAL SHEETS
04	SF, Ala	80	12.2/14.3 0.0/4.0	407a 09S68	1204

Syn Yee Chin 03/08/10
REGISTERED ELECTRICAL ENGINEER DATE

REGISTERED PROFESSIONAL ENGINEER
SYN YEE CHIN
No. 18186
Exp. 09/30/2011
ELECTRICAL
STATE OF CALIFORNIA

05-06-2010
PLANS APPROVAL DATE

PB AMERICAS, Inc.
A Parsons Brinckerhoff Company
303 Second St., Suite 700N
San Francisco, CA 94107-1317

The State of California or its officers or agents shall not be responsible for the accuracy or completeness of electronic copies of this plan sheet.

Caltrans now has a web site! To get to the web site, go to http://www.dot.ca.gov

NOTES:

1. Contractor shall install output card. See sheet E-952 for location.
2. Contractor shall wire connection shown by bold lines.

REQUEST FOR INFORMATION NOT ADDRESSED IN THIS CCO REMAIN IN FORCE

MARK	DATE	DESCRIPTIONS	BY	CH'D	CCO#
		REVISIONS			
0	03/08/10	MEP INTEGRATION	JE	SYC	110

CONTRACT CHANGE ORDER NO._____
SHEET _____ OF _____

DETAILS
SCADA REMOTE TERMINAL UNIT SYSTEM
RTU #17 WIRING DIAGRAM

NO SCALE

E-958

DESIGN OVERSIGHT	CALCULATED/ DESIGNED BY	DATE	REVISED BY
BEHZAD GOLEMOHAMMADI	CHECKED BY	SYC 01/10	FW 01/10	DATE REVISED

STATE OF CALIFORNIA - DEPARTMENT OF TRANSPORTATION
Caltrans

THIS PLAN ACCURATE FOR ELECTRICAL WORK ONLY.

FOR REDUCED PLANS ORIGINAL SCALE IS IN MILLIMETERS 0 20 40 60 80

DGN FILE =>04-0120f1_E-958.dgn
USERNAME =>llorico

CU 04251

EA 0120F1

LAST REVISION 00-00-00
DATE PLOTTED => 06-MAY-2010
TIME PLOTTED => 19:11

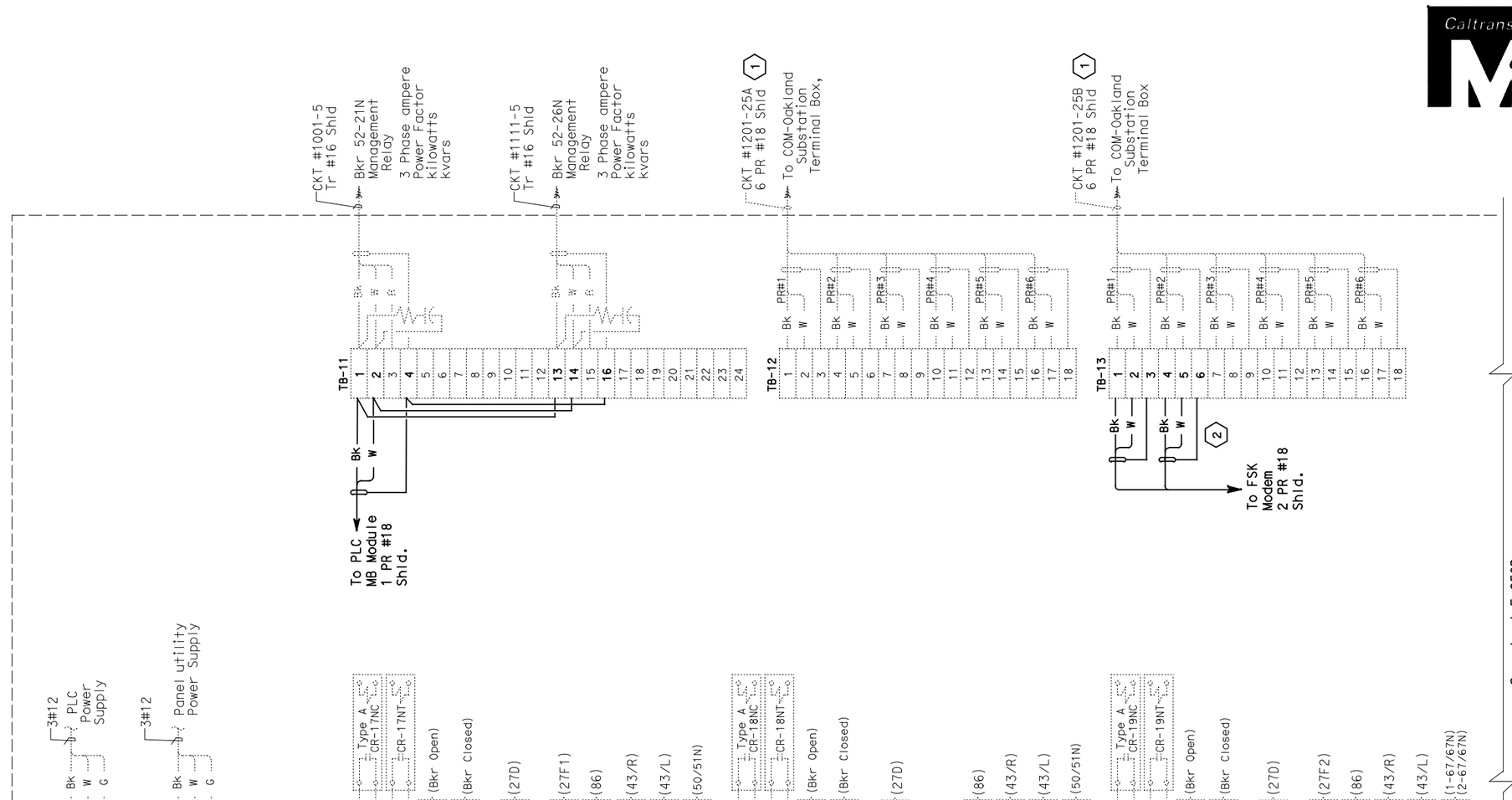

Caltrans Metric

DIST	COUNTY	ROUTE	KILOMETER POST TOTAL PROJECT	SHEET No	TOTAL SHEETS
04	SF,Ala	80	12.2/14.3 0.0/4.0	407a 09S69	1204

Syn Yee Chin 03/08/10
REGISTERED ELECTRICAL ENGINEER DATE

05-06-2010
PLANS APPROVAL DATE

REGISTERED PROFESSIONAL ENGINEER
SYN YEE CHIN
No. 18186
Exp. 09/30/2011
ELECTRICAL
STATE OF CALIFORNIA

PB AMERICAS, Inc.
A Parsons Brinckerhoff Company
303 Second St., Suite 700N
San Francisco, CA 94107-1317

The State of California or its officers or agents shall not be responsible for the accuracy or completeness of electronic copies of this plan sheet.

Caltrans now has a web site! To get to the web site, go to http://www.dot.ca.gov

NOTES:

1. This plan sheet is a record drawing of the Oakland Substation Remote Terminal Unit #17. The Contractor shall verify the existing installation. See sheet E-47 from the Oakland Substation, contract No. 04-014034.
2. References: See sheet E-953.
3. Contractor shall wire connection shown by bold lines.

SHEET NOTES:

(1) Verify that the shield is not grounded.
(2) Do not ground shield.

REQUEST FOR INFORMATION NOT ADDRESSED IN THIS CCO REMAIN IN FORCE					
0	03/08/10	MEP INTEGRATION	JE	SYC	110
MARK	DATE	DESCRIPTIONS	BY	CH'D	CCO#
REVISIONS					

CONTRACT CHANGE ORDER NO._____
SHEET _____ OF _____

DETAILS
SCADA REMOTE TERMINAL UNIT SYSTEM
OAKLAND SUBSTATION
RTU #17 CONNECTION DIAGRAM

NO SCALE

E-958A

STATE OF CALIFORNIA - DEPARTMENT OF TRANSPORTATION
Caltrans

	DESIGN OVERSIGHT
	BEHZAD GOLEMOHAMMADI
CALCULATED/ DESIGNED BY	
CHECKED BY	

DATE	SYC	REVISED BY
01/10	01/10	DATE REVISED

THIS PLAN ACCURATE FOR ELECTRICAL WORK ONLY.

FOR REDUCED PLANS ORIGINAL SCALE IS IN MILLIMETERS 0 20 40 60 80

DGN FILE =>04-0120f1_E-958A.dgn
USERNAME =>llorico

CU 04251

EA 0120F1

LAST REVISION 00-00-00
DATE PLOTTED => 06-MAY-2010
TIME PLOTTED => 19:11

REQUEST FOR INFORMATION NOT ADDRESSED IN THIS CCO REMAIN IN FORCE					
0	03/08/10	MEP INTEGRATION	JE	SYC	110
MARK	DATE	DESCRIPTIONS	BY	CH'D	CCO#
REVISIONS					

CONTRACT CHANGE ORDER NO._____
SHEET _____ OF _____

NOTES:

1. This plan sheet is a record drawing of the Oakland Substation Remote Terminal Unit #17. See sheet E-48 of the Oakland Substation, contract No. 04-014034. The Contractor shall verify the existing installation.
2. References:
   See sheet E-953.

Caltrans Metric

DIST	COUNTY	ROUTE	KILOMETER POST TOTAL PROJECT	SHEET No	TOTAL SHEETS
04	SF,Ala	80	12.2/14.3 0.0/4.0	407a 09ST0	1204

Syn Yee Chin 03/08/10
REGISTERED ELECTRICAL ENGINEER DATE

05-06-2010
PLANS APPROVAL DATE

REGISTERED PROFESSIONAL ENGINEER — SYN YEE CHIN No. 18186 Exp. 09/30/2011 ELECTRICAL — STATE OF CALIFORNIA

PB AMERICAS, Inc.
A Parsons Brinckerhoff Company
303 Second St., Suite 700N
San Francisco, CA 94107-1317

The State of California or its officers or agents shall not be responsible for the accuracy or completeness of electronic copies of this plan sheet.

Caltrans now has a web site! To get to the web site, go to http://www.dot.ca.gov

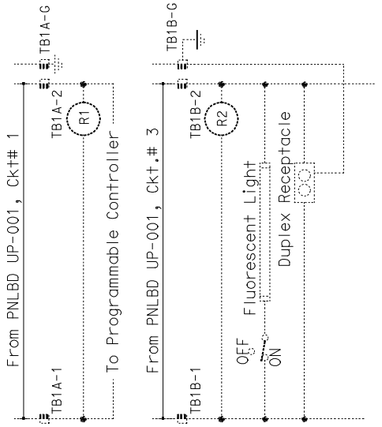

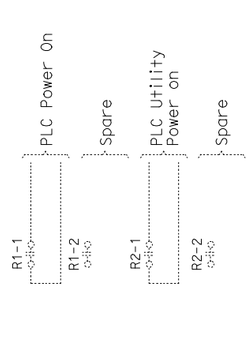

ELEMENTARY DIAGRAM

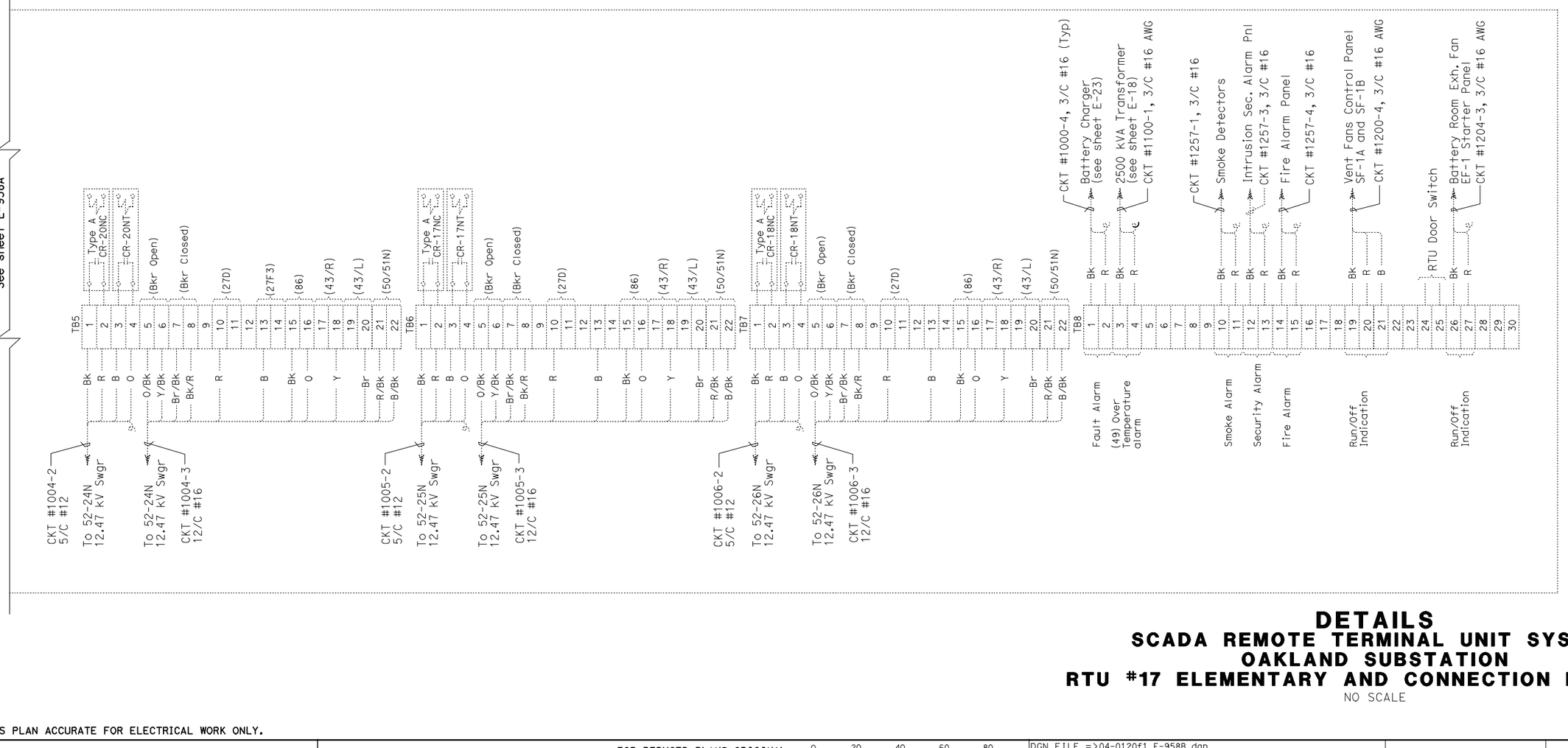

CONNECTION DIAGRAM

DETAILS
SCADA REMOTE TERMINAL UNIT SYSTEM
OAKLAND SUBSTATION
RTU #17 ELEMENTARY AND CONNECTION DIAGRAMS

NO SCALE

E-958B

STATE OF CALIFORNIA - DEPARTMENT OF TRANSPORTATION
Caltrans
DESIGN OVERSIGHT
BEHZAD GOLEMOHAMMADI
CALCULATED/DESIGNED BY
CHECKED BY
SYC 01/10 REVISED BY
FW 01/10 DATE REVISED

THIS PLAN ACCURATE FOR ELECTRICAL WORK ONLY.

LAST REVISION 00-00-00
DATE PLOTTED => 06-MAY-2010
TIME PLOTTED => 19:11

FOR REDUCED PLANS ORIGINAL SCALE IS IN MILLIMETERS 0 20 40 60 80

DGN FILE =>04-0120f1_E-958B.dgn
USERNAME =>llorico

CU 04251

EA 0120F1

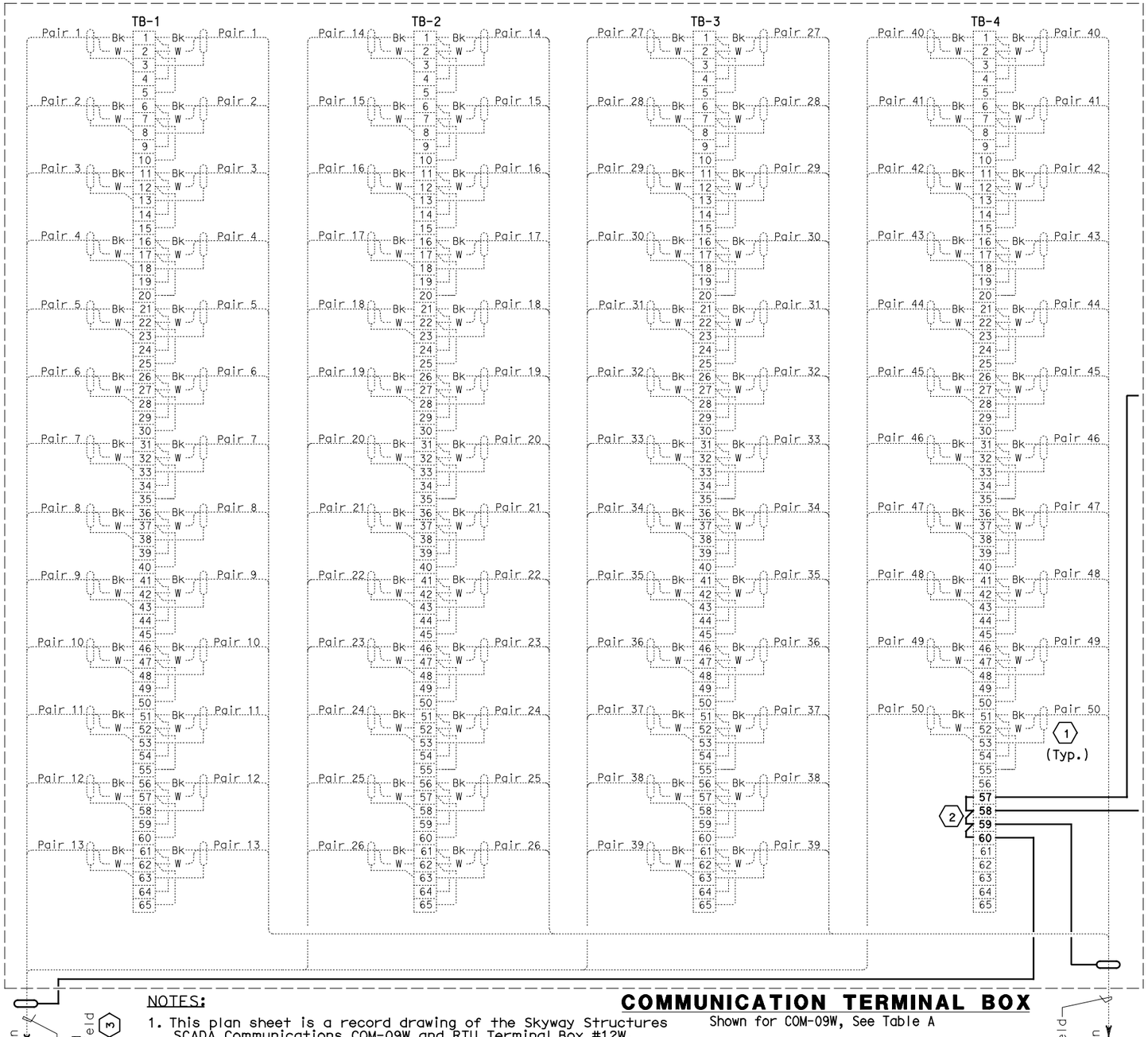

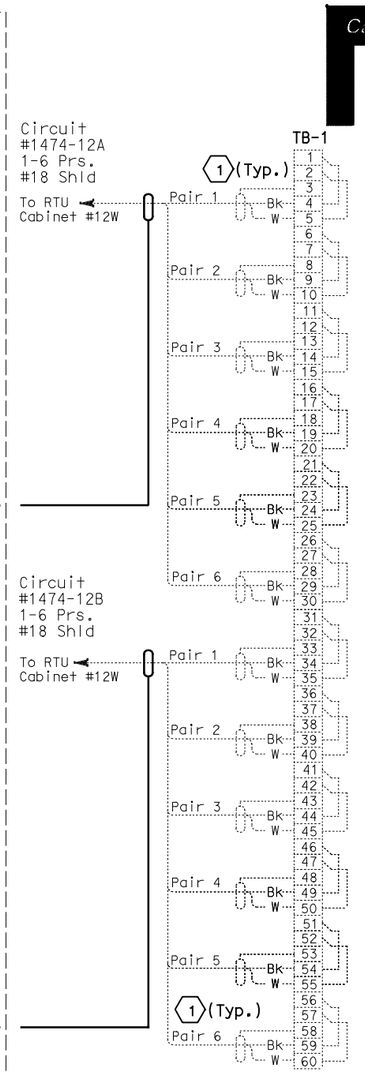

TYPICAL WIRING WITH CONNECTION TO SCADA RTU CABINET

Shown for COM-11W connecting to RTU-12W (See Table A)

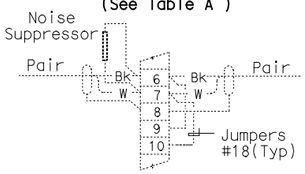

TYPICAL WIRING EACH PAIR

COMMUNICATION TERMINAL BOX

Shown for COM-09W, See Table A

NOTES:

1. This plan sheet is a record drawing of the Skyway Structures SCADA Communications COM-09W and RTU Terminal Box #12W. The Contractor shall verify the existing installation. See sheet EE-372 from the Skyway Structures, contract No. 04-012024.
2. Contractor shall wire connection shown by bold lines.

SHEET NOTES:

1. Verify that the shield is not grounded.
2. Do not ground shield.
3. For Cable Circuit Numbers, see Table A.

REQUEST FOR INFORMATION NOT ADDRESSED IN THIS CCO REMAIN IN FORCE

MARK	DATE	DESCRIPTIONS	BY	CH'D	CCO#
		REVISIONS			
0	03/08/10	MEP INTEGRATION	JE	SYC	110

CONTRACT CHANGE ORDER NO._____
SHEET _____ OF _____

THIS PLAN ACCURATE FOR ELECTRICAL WORK ONLY.

TABLE A

Westbound

Circuit No.	Cable installed between:
1474-10	SCADA Comm. Term Boxes COM-8W and COM-9W
1474-11	SCADA Comm. Term Boxes COM-9W and COM-10W
1474-12	SCADA Comm. Term Boxes COM-10W and COM-11W
1474-12A	SCADA Comm. Term Box COM-11W and RTU #12W
1474-12B	SCADA Comm. Term Box COM-11W and RTU #12W
1474-13	SCADA Comm. Term Boxes COM-11W and COM-12W
1474-14	SCADA Comm. Term Boxes COM-12W and COM-13W
1474-14A	SCADA Comm. Term Boxes COM-SUB WB and RTU #13W
1474-14B	SCADA Comm. Term Boxes COM-SUB WB and RTU #13W
1474-15	SCADA Comm. Term Boxes COM-SUB WB and COM-14W
1474-16	SCADA Comm. Term Boxes COM-14W and COM-15W
1474-17	SCADA Comm. Term Boxes COM-15W and COM-16W
1474-17A	SCADA Comm. Term Boxes COM-16W and RTU #14W
1474-17B	SCADA Comm. Term Boxes COM-16W and RTU #14W
1474-18	SCADA Comm. Term Boxes COM-16W and COM-17W
1474-19	SCADA Comm. Term Boxes COM-17W and COM-18W
1474-20	SCADA Comm. Term Boxes COM-18W and COM-19W
1474-21	SCADA Comm. Term Boxes COM-19W and COM-20W
1474-21A	SCADA Comm. Term Boxes COM-20W and RTU #15W
1474-21B	SCADA Comm. Term Boxes COM-20W and RTU #15W
1474-22	SCADA Comm. Term Boxes COM-20W and COM-21W
1474-23	SCADA Comm. Term Boxes COM-13W and COM-SUB. WB
1474-24	SCADA Comm. Term Boxes COM-21W and COM-22W
1474-25	SCADA Comm. Term Boxes COM-22W and COM-23W
1474-25A	SCADA Comm. Term Boxes COM-MOLE and RTU #16
1474-25B	SCADA Comm. Term Boxes COM-MOLE and RTU #16
1474-26	SCADA Comm. Term Boxes COM-23W and COM-MOLE

Eastbound

Circuit No.	Cable installed between:
2474-10	SCADA Comm. Term Boxes COM-8E and COM-9E
2474-11	SCADA Comm. Term Boxes COM-9E and COM-10E
2474-12	SCADA Comm. Term Boxes COM-10E and COM-11E
2474-12A	SCADA Comm. Term Box COM-11E and RTU #12E
2474-12B	SCADA Comm. Term Box COM-11E and RTU #12E
2474-13	SCADA Comm. Term Boxes COM-11E and COM-12E
2474-14	SCADA Comm. Term Boxes COM-12E and COM-13E
2474-14A	SCADA Comm. Term Boxes COM-SUB EB and RTU #13E
2474-14B	SCADA Comm. Term Boxes COM-SUB EB and RTU #13E
2474-15	SCADA Comm. Term Boxes COM-SUB EB and COM-14E
2474-16	SCADA Comm. Term Boxes COM-14E and COM-15E
2474-17	SCADA Comm. Term Boxes COM-15E and COM-16E
2474-17A	SCADA Comm. Term Boxes COM-16E and RTU #14E
2474-17B	SCADA Comm. Term Boxes COM-16E and RTU #14E
2474-18	SCADA Comm. Term Boxes COM-16E and COM-17E
2474-19	SCADA Comm. Term Boxes COM-17E and COM-18E
2474-20	SCADA Comm. Term Boxes COM-18E and COM-19E
2474-21	SCADA Comm. Term Boxes COM-19E and COM-20E
2474-21A	SCADA Comm. Term Boxes COM-20E and RTU #15E
2474-21B	SCADA Comm. Term Boxes COM-20E and RTU #15E
2474-22	SCADA Comm. Term Boxes COM-20E and COM-21E
2474-23	SCADA Comm. Term Boxes COM-13E and COM-SUB. EB
2474-24	SCADA Comm. Term Boxes COM-21E and COM-22E
2474-25	SCADA Comm. Term Boxes COM-22E and COM-23E
2474-26	SCADA Comm. Term Boxes COM-23E and COM-MOLE
2474-27	SCADA Comm. Term Boxes COM-MOLE and COM-OAKL. SUB
1201-25A	SCADA Comm. Term Boxes COM-OAKL. SUB and RTU #17
1201-25B	SCADA Comm. Term Boxes COM-OAKL. SUB. and RTU #17

DETAILS
SCADA REMOTE TERMINAL UNIT SYSTEM COMMUNICATION TERMINAL BOX WIRING DIAGRAM

NO SCALE

E-959

DIST	COUNTY	ROUTE	KILOMETER POST TOTAL PROJECT	SHEET No	TOTAL SHEETS
04	SF, Ala	80	12.2/14.3 0.0/4.0	407a 09S71	1204

Syn Yee Chin 03/08/10
REGISTERED ELECTRICAL ENGINEER DATE

SYN YEE CHIN No. 18186 Exp. 09/30/2011 ELECTRICAL — REGISTERED PROFESSIONAL ENGINEER — STATE OF CALIFORNIA

05-06-2010
PLANS APPROVAL DATE

PB AMERICAS, Inc.
A Parsons Brinckerhoff Company
303 Second St., Suite 700N
San Francisco, CA 94107-1317

The State of California or its officers or agents shall not be responsible for the accuracy or completeness of electronic copies of this plan sheet.

Caltrans now has a web site! To get to the web site, go to http://www.dot.ca.gov

DESIGN OVERSIGHT — BEHZAD GOLEMOHAMMADI

CALCULATED/DESIGNED BY — CHECKED BY

DATE	REVISED BY
0/10	DATE REVISED
FW	SYC

STATE OF CALIFORNIA - DEPARTMENT OF TRANSPORTATION — Caltrans

FOR REDUCED PLANS ORIGINAL SCALE IS IN MILLIMETERS 0 20 40 60 80

DGN FILE =>04-0120f1_E-959.dgn
USERNAME =>llorico

CU 04251 EA 0120F1

LAST REVISION 00-00-00 DATE PLOTTED => 06-MAY-2010 TIME PLOTTED => 19:11

To SCADA Communication
Terminal Box COM-23W

CKT #1474-26
50 Pr's #18
Shielded Pairs
With Overall Shield

To SCADA Communication
Terminal Box COM-23E

CKT #2474-26
50 Pr's #18
Shielded Pairs
With Overall Shield

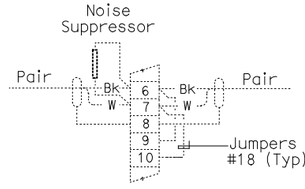

TYPICAL WIRING EACH PAIR

NOTES:

1. This plan sheet is a record drawing of the Oakland Approach Structures SCADA Communications Terminal Box COM-MOLE and RTU #16. The Contractor shall verify the existing installation. See sheet E-161 from the Oakland Touchdown-1, contract No. 04-0120L4.

SHEET NOTES:

(1) Verify that the shield is not grounded.

REQUEST FOR INFORMATION NOT ADDRESSED IN THIS CCO REMAIN IN FORCE					
MARK	DATE	REVISIONS DESCRIPTIONS	BY	CH'D	CCO#
0	03/08/10	MEP INTEGRATION	JE	SYC	110

CONTRACT CHANGE ORDER NO._____
SHEET _____ OF _____

DETAILS
SCADA REMOTE TERMINAL UNIT SYSTEM
COM-MOLE TERMINAL BOX WIRING DIAGRAM

NO SCALE

E-959A

DIST	COUNTY	ROUTE	KILOMETER POST TOTAL PROJECT	SHEET No	TOTAL SHEETS
04	SF,Ala	80	12.2/14.3 0.0/4.0	407a 09ST2	1204

Syn Yee Chin 03/08/10
REGISTERED ELECTRICAL ENGINEER DATE

SYN YEE CHIN No. 18186 Exp. 09/30/2011 ELECTRICAL — REGISTERED PROFESSIONAL ENGINEER — STATE OF CALIFORNIA

05-06-2010
PLANS APPROVAL DATE

PB AMERICAS, Inc.
A Parsons Brinckerhoff Company
303 Second St., Suite 700N
San Francisco, CA 94107-1317

The State of California or its officers or agents shall not be responsible for the accuracy or completeness of electronic copies of this plan sheet.

Caltrans now has a web site! To get to the web site, go to http://www.dot.ca.gov

DESIGN OVERSIGHT: BEHZAD GOLEMOHAMMADI
CALCULATED/DESIGNED BY: SYC | DATE 01/10 | REVISED BY
CHECKED BY: FW | 01/10 | DATE REVISED

STATE OF CALIFORNIA - DEPARTMENT OF TRANSPORTATION
Caltrans

THIS PLAN ACCURATE FOR ELECTRICAL WORK ONLY.

FOR REDUCED PLANS ORIGINAL SCALE IS IN MILLIMETERS 0 20 40 60 80

DGN FILE =>04-0120f1_E-959A.dgn
USERNAME =>llorico

CU 04251 | EA 0120F1

LAST REVISION 00-00-00 | DATE PLOTTED => 06-MAY-2010 | TIME PLOTTED => 19:11

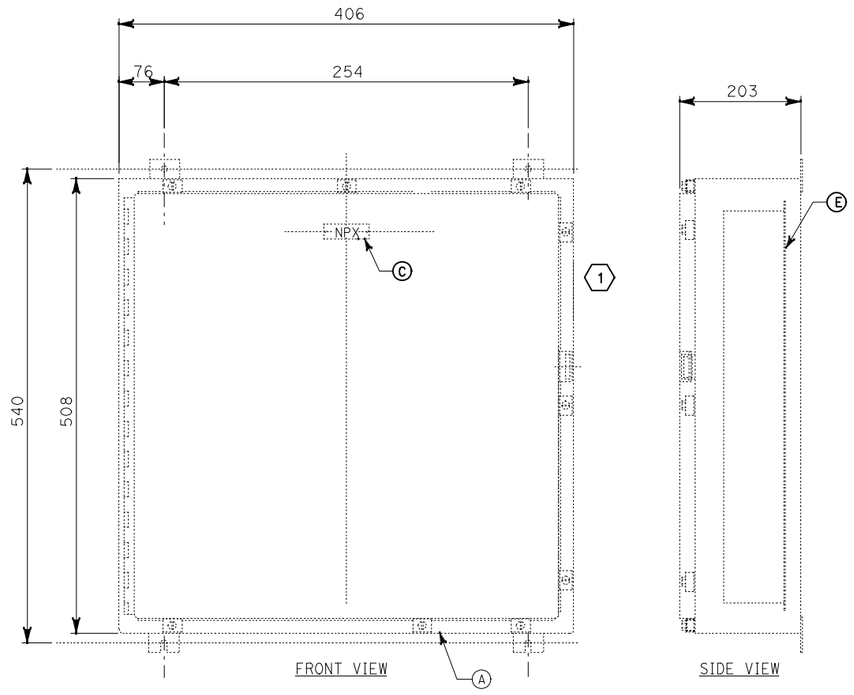

FRONT PANEL

MATERIAL LIST		
ITEM	DESCRIPTION	QTY.
Ⓐ	Enclosure, galvanized steel, NEMA 12, with interior panel 375 x 327	1 ⟨1⟩
Ⓑ	65 Point Terminal blocks, rated 300 V, feed-through modular terminal block with screw connection, cross section 0.2-4 mm², width 5.2 mm, on DIN rail with (2) end clamps	4
Ⓒ	Nameplate to be white lamicoid with black core, size 19 x 80, lettering to be 3 mm condensed gothic. (See nameplate Schedule below for engravings).	-
Ⓓ	Noise suppressor, termination resistor	50
Ⓔ	Back Panel, metal, bond to enclosure ground lug	1
Ⓕ	Plastic Wireway	5

ITEM NO.	NAMEPLATE SCHEDULE LINE 1	⟨2⟩ LINE 2	QTY.
NP1	TELEPHONE COMMUNICATIONS	TERM. BOX. TEL-09W	
NP2	TELEPHONE COMMUNICATIONS	TERM. BOX. TEL-10W	
NP3	TELEPHONE COMMUNICATIONS	TERM. BOX. TEL-11W	
NP4	TELEPHONE COMMUNICATIONS	TERM. BOX. TEL-12W	
NP5	TELEPHONE COMMUNICATIONS	TERM. BOX. TEL-13W	
NP6	TELEPHONE COMMUNICATIONS	TERM. BOX. TEL-SUB. WB	
NP7	TELEPHONE COMMUNICATIONS	TERM. BOX. TEL-14W	
NP8	TELEPHONE COMMUNICATIONS	TERM. BOX. TEL-15W	
NP9	TELEPHONE COMMUNICATIONS	TERM. BOX. TEL-16W	
NP10	TELEPHONE COMMUNICATIONS	TERM. BOX. TEL-17W	
NP11	TELEPHONE COMMUNICATIONS	TERM. BOX. TEL-18W	
NP12	TELEPHONE COMMUNICATIONS	TERM. BOX. TEL-19W	
NP13	TELEPHONE COMMUNICATIONS	TERM. BOX. TEL-20W	
NP14	TELEPHONE COMMUNICATIONS	TERM. BOX. TEL-21W	

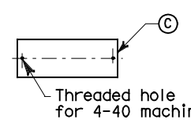

NOTE: Nameplates shall be mounted to the enclosure front panel with 4-40 stainless steel machine screws. The control panel to be drilled and tapped (no self-tapping screws).

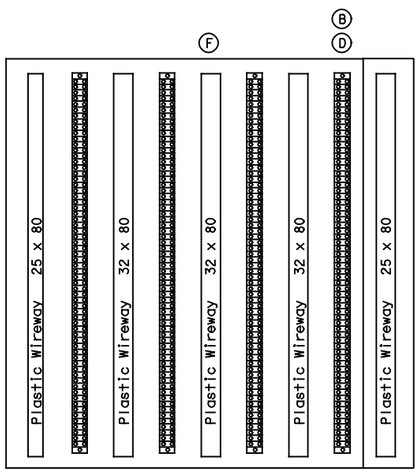

INSIDE PANEL LAYOUT

THIS PLAN ACCURATE FOR ELECTRICAL WORK ONLY.

DIST	COUNTY	ROUTE	KILOMETER POST TOTAL PROJECT	SHEET No	TOTAL SHEETS
04	SF, Ala	80	12.2/14.3 0.0/4.0	407a 09ST3	1204

Syn Yee Chin 03/08/10
REGISTERED ELECTRICAL ENGINEER DATE

05-06-2010
PLANS APPROVAL DATE

REGISTERED PROFESSIONAL ENGINEER — SYN YEE CHIN No. 18186 Exp. 09/30/2011 ELECTRICAL — STATE OF CALIFORNIA

PB AMERICAS, Inc.
A Parsons Brinckerhoff Company
303 Second St., Suite 700N
San Francisco, CA 94107-1317

The State of California or its officers or agents shall not be responsible for the accuracy or completeness of electronic copies of this plan sheet.

Caltrans now has a web site! To get to the web site, go to http://www.dot.ca.gov

NOTES:

1. Contractor shall furnish and install a Back Panel in each telephone terminal box. (See Material List Item #E). Bond back panel to ground lug.
2. Contractor shall furnish and install four -65 point terminal blocks and 5 plastic wireways in each telephone terminal box (See Material List Item #B and #F).
3. Contractor shall furnish and install a nameplate on each telephone terminal box. (See nameplate schedule listed on this drawing).
4. Contractor shall furnish and install 50 telephone circuit noise suppressors in each telephone terminal box.
5. See plan sheet E-964 for telephone terminal box terminations.

SHEET NOTES:

⟨1⟩ Existing Enclosure.

⟨2⟩ Contractor to provide and install a name plate to be mounted below the existing one, with Line 2 engraved.

REQUEST FOR INFORMATION NOT ADDRESSED IN THIS CCO REMAIN IN FORCE

MARK	DATE	DESCRIPTIONS	BY	CH'D	CCO#
		REVISIONS			
0	03/08/10	MEP INTEGRATION	JE	SYC	110

CONTRACT CHANGE ORDER NO._____
SHEET _____ OF _____

DETAILS
SCADA REMOTE TERMINAL UNIT SYSTEM
TELEPHONE TERMINAL BOX ASSEMBLY
WESTBOUND

NO SCALE

E-960

CALCULATED/ DESIGNED BY	CHECKED BY
SYC	FW
DATE 01/10	01/10
REVISED BY	DATE REVISED

DESIGN OVERSIGHT — BEHZAD GOLEMOHAMMADI

STATE OF CALIFORNIA - DEPARTMENT OF TRANSPORTATION — Caltrans

LAST REVISION 00-00-00 — DATE PLOTTED => 06-MAY-2010 TIME PLOTTED => 19:12

FOR REDUCED PLANS ORIGINAL SCALE IS IN MILLIMETERS 0 20 40 60 80

DGN FILE =>04-0120f1_E-960.dgn
USERNAME =>llorico

CU 04251 EA 0120F1

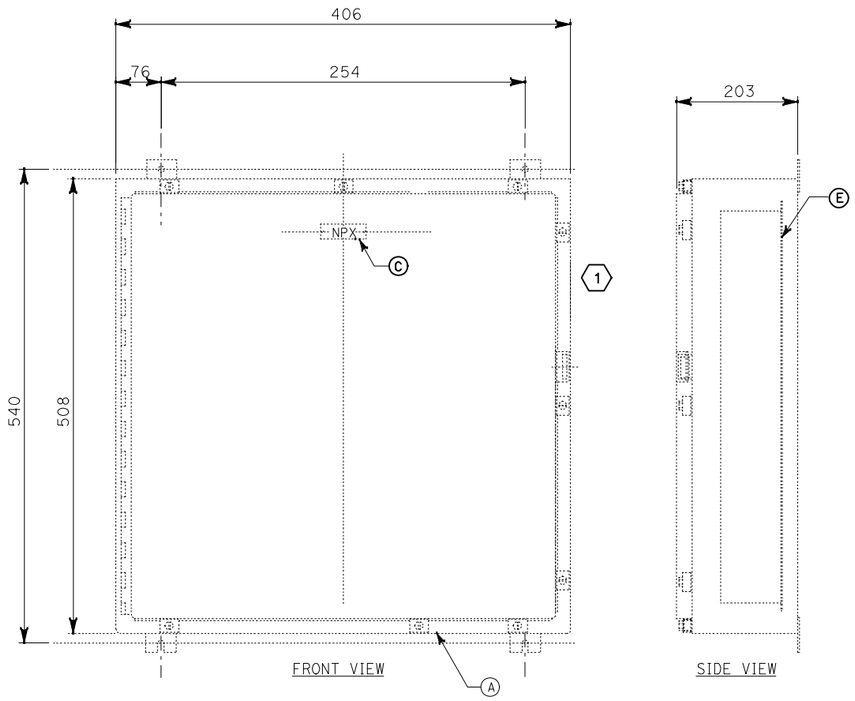

FRONT PANEL

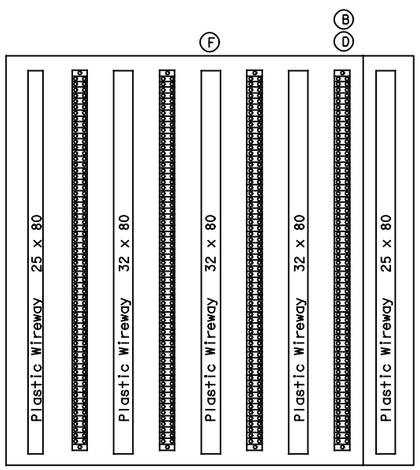

INSIDE PANEL LAYOUT

MATERIAL LIST

ITEM	DESCRIPTION	QTY.
A	Enclosure, galvanized steel, NEMA 12, with interior panel 375 x 327	1 ⟨1⟩
B	65 Point Terminal blocks, rated 300 V, feed-through modular terminal block with screw connection, cross section 0.2-4 mm², width 5.2 mm, on DIN rail with (2) end clamps	4
C	Nameplate to be white lamicoid with black core, size 19 x 80, lettering to be 3 mm condensed gothic. (See nameplate Schedule below for engravings).	-
D	Noise suppressor, termination resistor	50
E	Back Panel, metal, bond to enclosure ground lug	1
F	Plastic Wireway	5

NAMEPLATE SCHEDULE

ITEM NO.	LINE 1	⟨2⟩ LINE 2	QTY.
NP1	TELEPHONE COMMUNICATIONS	TERM. BOX. TEL-09E	
NP2	TELEPHONE COMMUNICATIONS	TERM. BOX. TEL-10E	
NP3	TELEPHONE COMMUNICATIONS	TERM. BOX. TEL-11E	
NP4	TELEPHONE COMMUNICATIONS	TERM. BOX. TEL-12E	
NP5	TELEPHONE COMMUNICATIONS	TERM. BOX. TEL-13E	
NP6	TELEPHONE COMMUNICATIONS	TERM. BOX. TEL-SUB. EB	
NP7	TELEPHONE COMMUNICATIONS	TERM. BOX. TEL-14E	
NP8	TELEPHONE COMMUNICATIONS	TERM. BOX. TEL-15E	
NP9	TELEPHONE COMMUNICATIONS	TERM. BOX. TEL-16E	
NP10	TELEPHONE COMMUNICATIONS	TERM. BOX. TEL-17E	
NP11	TELEPHONE COMMUNICATIONS	TERM. BOX. TEL-18E	
NP12	TELEPHONE COMMUNICATIONS	TERM. BOX. TEL-19E	
NP13	TELEPHONE COMMUNICATIONS	TERM. BOX. TEL-20E	
NP14	TELEPHONE COMMUNICATIONS	TERM. BOX. TEL-21E	

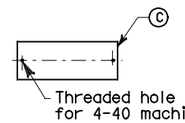

NOTE: Nameplates shall be mounted to the enclosure front panel with 4-40 stainless steel machine screws. The control panel to be drilled and tapped (no self-tapping screws).

DIST	COUNTY	ROUTE	KILOMETER POST TOTAL PROJECT	SHEET No	TOTAL SHEETS
04	SF, Ala	80	12.2/14.3 0.0/4.0	407a 09ST4	1204

Syn Yee Chin 03/08/10
REGISTERED ELECTRICAL ENGINEER DATE

05-06-2010
PLANS APPROVAL DATE

REGISTERED PROFESSIONAL ENGINEER — SYN YEE CHIN No. 18186 Exp. 09/30/2011 ELECTRICAL — STATE OF CALIFORNIA

PB AMERICAS, Inc.
A Parsons Brinckerhoff Company
303 Second St., Suite 700N
San Francisco, CA 94107-1317

The State of California or its officers or agents shall not be responsible for the accuracy or completeness of electronic copies of this plan sheet.

Caltrans now has a web site! To get to the web site, go to http://www.dot.ca.gov

NOTES:

1. Contractor shall furnish and install a Back Panel in each telephone terminal box. (See Material List Item #E). Bond back panel to ground lug.
2. Contractor shall furnish and install four -65 point terminal blocks and 5 plastic wireways in each telephone terminal box (See Material List Item #B and #F).
3. Contractor shall furnish and install a nameplate on each telephone terminal box. (See nameplate schedule listed on this drawing).
4. Contractor shall furnish and install 50 telephone circuit noise suppressors in each telephone terminal box.
5. See plan sheet E-965 for telephone terminal box terminations.

SHEET NOTES:

⟨1⟩ Existing Enclosure.

⟨2⟩ Contractor to provide and install a name plate to be mounted below the existing one, with Line 2 engraved.

REQUEST FOR INFORMATION NOT ADDRESSED IN THIS CCO REMAIN IN FORCE

MARK	DATE	DESCRIPTIONS	BY	CH'D	CCO#
		REVISIONS			
0	03/08/10	MEP INTEGRATION	JE	SYC	110

CONTRACT CHANGE ORDER NO._____
SHEET _____ OF _____

DETAILS
SCADA REMOTE TERMINAL UNIT SYSTEM
TELEPHONE TERMINAL BOX ASSEMBLY
EASTBOUND

NO SCALE

E-961

DESIGN OVERSIGHT: BEHZAD GOLEMOHAMMADI
CALCULATED/DESIGNED BY: SYC
CHECKED BY: FW
DATE REVISED: 01/10
REVISED BY:
STATE OF CALIFORNIA - DEPARTMENT OF TRANSPORTATION
Caltrans

THIS PLAN ACCURATE FOR ELECTRICAL WORK ONLY.

FOR REDUCED PLANS ORIGINAL SCALE IS IN MILLIMETERS 0 20 40 60 80

DGN FILE =>04-0120f1_E-961.dgn
USERNAME =>llorico

CU 04251 EA 0120F1

LAST REVISION 00-00-00 DATE PLOTTED => 06-MAY-2010 TIME PLOTTED => 19:12

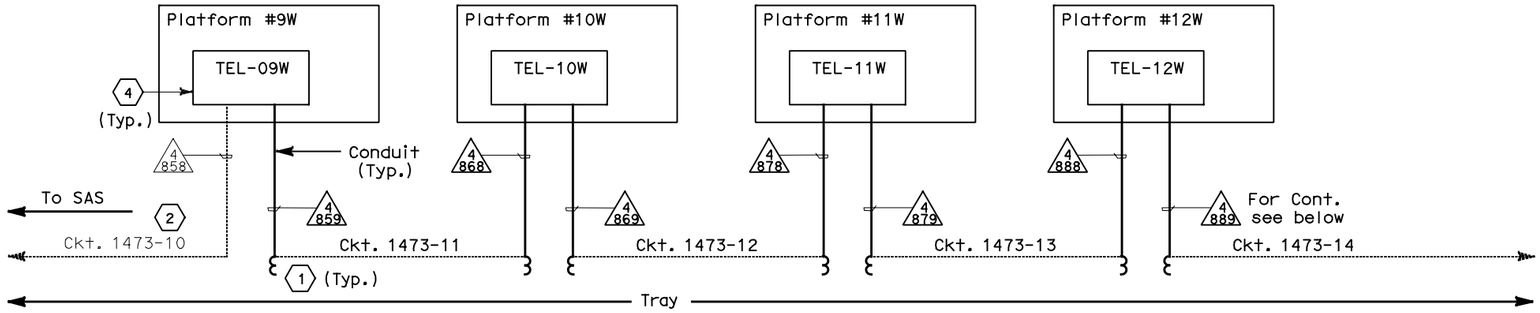

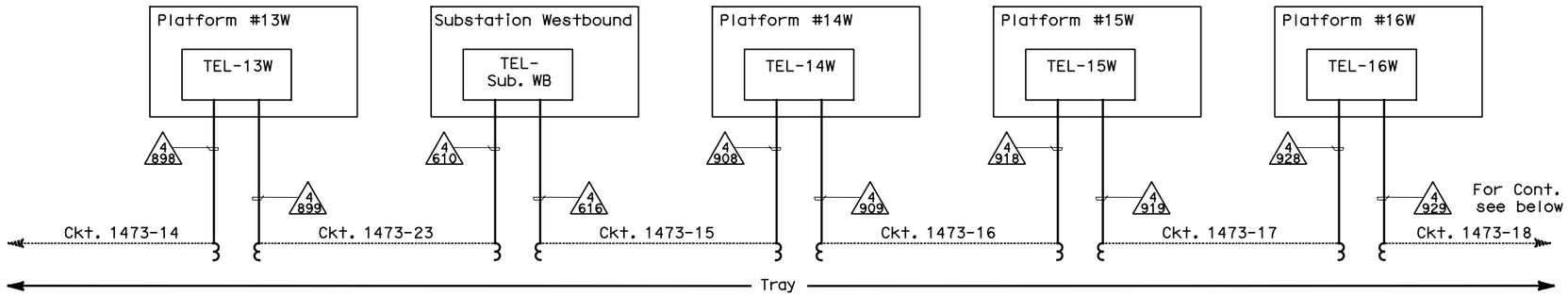

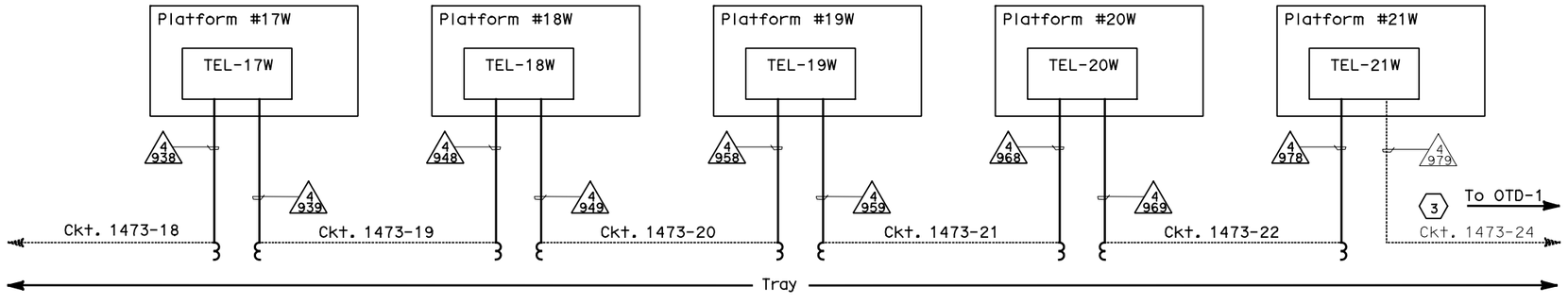

DIST	COUNTY	ROUTE	KILOMETER POST TOTAL PROJECT	SHEET No	TOTAL SHEETS
04	SF,Ala	80	12.2/14.3 0.0/4.0	407a 09S75	1204

Syn Yee Chin 03/08/10
REGISTERED ELECTRICAL ENGINEER DATE

05-06-2010
PLANS APPROVAL DATE

REGISTERED PROFESSIONAL ENGINEER
SYN YEE CHIN
No. 18186
Exp. 09/30/2011
ELECTRICAL
STATE OF CALIFORNIA

PB AMERICAS, Inc.
A Parsons Brinckerhoff Company
303 Second St., Suite 700N
San Francisco, CA 94107-1317

The State of California or its officers or agents shall not be responsible for the accuracy or completeness of electronic copies of this plan sheet.

Caltrans now has a web site! To get to the web site, go to http://www.dot.ca.gov

NOTES:

1. All circuits (50 pair #18) shown on this drawing have been installed in the TOS/COM trays spanning the entire Skyway. At each platform the circuits have been coiled in the trays. Contractor shall pull the 50 pair #18 Telephone Cables from the trays into the Telephone Terminal Boxes as follows:

   At platform 09W: Pull ckt #1473-10 in conduit # 4858 to TEL-09W.
   At platform 09W: Pull ckt #1473-11 in conduit # 4859 to TEL-09W.
   At platform 10W: Pull ckt #1473-11 in conduit # 4868 to TEL-10W.
   At platform 10W: Pull ckt #1473-12 in conduit # 4869 to TEL-10W.
   At platform 11W: Pull ckt #1473-12 in conduit # 4878 to TEL-11W.
   At platform 11W: Pull ckt #1473-13 in conduit # 4879 to TEL-11W.
   At platform 12W: Pull ckt #1473-13 in conduit # 4888 to TEL-12W.
   At platform 12W: Pull ckt #1473-14 in conduit # 4889 to TEL-12W.
   At platform 13W: Pull ckt #1473-14 in conduit # 4898 to TEL-13W.
   At platform 13W: Pull ckt #1473-23 in conduit # 4899 to TEL-13W.
   At Substation W: Pull ckt #1473-23 in conduit # 4610 to TEL-Sub. WB.
   At Substation W: Pull ckt #1473-15 in conduit # 4616 to TEL-Sub. WB.
   At platform 14W: Pull ckt #1473-15 in conduit # 4908 to TEL-14W.
   At platform 14W: Pull ckt #1473-16 in conduit # 4909 to TEL-14W.
   At platform 15W: Pull ckt #1473-16 in conduit # 4918 to TEL-15W.
   At platform 15W: Pull ckt #1473-17 in conduit # 4919 to TEL-15W.
   At platform 16W: Pull ckt #1473-17 in conduit # 4928 to TEL-16W.
   At platform 16W: Pull ckt #1473-18 in conduit # 4929 to TEL-16W.
   At platform 17W: Pull ckt #1473-18 in conduit # 4938 to TEL-17W.
   At platform 17W: Pull ckt #1473-19 in conduit # 4939 to TEL-17W.
   At platform 18W: Pull ckt #1473-19 in conduit # 4948 to TEL-18W.
   At platform 18W: Pull ckt #1473-20 in conduit # 4949 to TEL-18W.
   At platform 19W: Pull ckt #1473-20 in conduit # 4958 to TEL-19W.
   At platform 19W: Pull ckt #1473-21 in conduit # 4959 to TEL-19W.
   At platform 20W: Pull ckt #1473-21 in conduit # 4969 to TEL-20W.
   At platform 20W: Pull ckt #1473-22 in conduit # 4968 to TEL-20W.
   At platform 21W: Pull ckt #1473-22 in conduit # 4978 to TEL-21W.
   At platform 21W: Pull ckt #1473-24 in conduit # 4979 to TEL-21W.

2. For arrangement of conduits routing to the service platforms see sheets E-623 through E-637.

3. All conduits shown on this drawing are existing and are to be used to pull in cable.

SHEET NOTES:

(1) All 50 pair #18 telephone cables are coiled in the trays in the girder at the platform locations.

(2) The SAS Contractor is responsible for pulling and terminating Ckt #1473-10.

(3) The OTD-1 Contractor is responsible for pulling and terminating Ckt #1473-24.

(4) Contractor shall terminate all 50 pair #18 cables in the Telephone Terminal Boxes, unless otherwise noted.

DETAILS
SCADA REMOTE TERMINAL UNIT SYSTEM
TELEPHONE CABLE BLOCK DIAGRAM
WESTBOUND

NO SCALE

E-962

REVISED BY	DATE REVISED
DATE 01/10	01/10
SYC	FW
CALCULATED/ DESIGNED BY	CHECKED BY

DESIGN OVERSIGHT
BEHZAD GOLEMOHAMMADI

STATE OF CALIFORNIA - DEPARTMENT OF TRANSPORTATION
Caltrans

REQUEST FOR INFORMATION NOT ADDRESSED IN THIS CCO REMAIN IN FORCE

MARK	DATE	DESCRIPTIONS	BY	CH'D	CCO#
		REVISIONS			
0	03/08/10	MEP INTEGRATION	JE	SYC	110

CONTRACT CHANGE ORDER NO._____
SHEET _____ OF _____

THIS PLAN ACCURATE FOR ELECTRICAL WORK ONLY.

FOR REDUCED PLANS ORIGINAL SCALE IS IN MILLIMETERS 0 20 40 60 80

DGN FILE =>04-0120f1_E-962.dgn
USERNAME =>llorico

CU 04251

EA 0120F1

LAST REVISION 00-00-00
DATE PLOTTED => 06-MAY-2010
TIME PLOTTED => 19:12

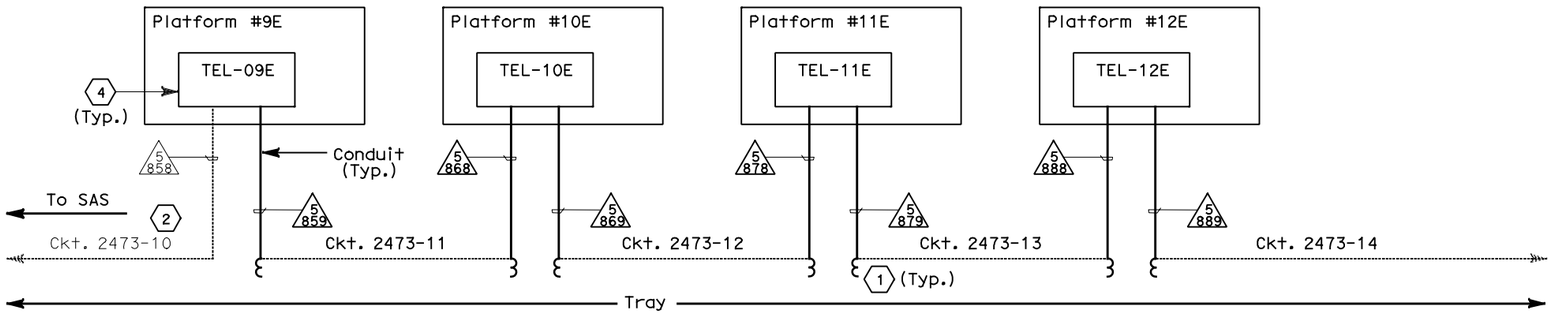

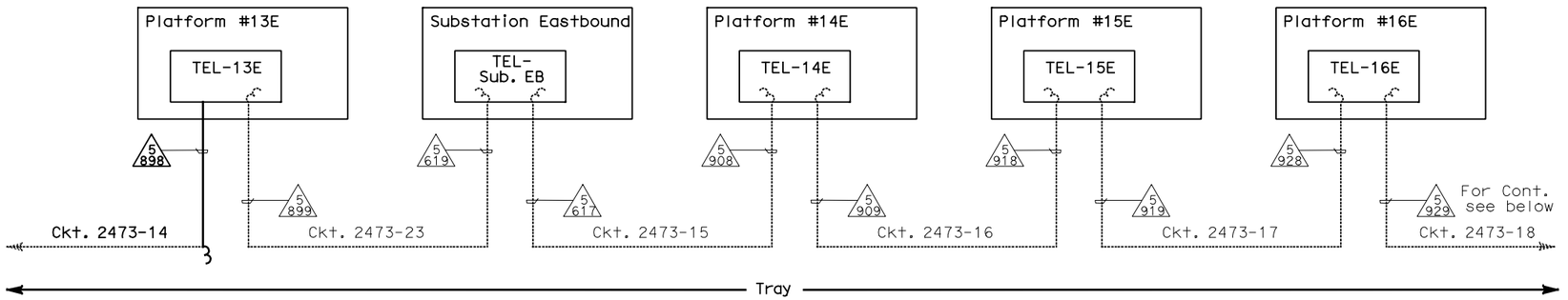

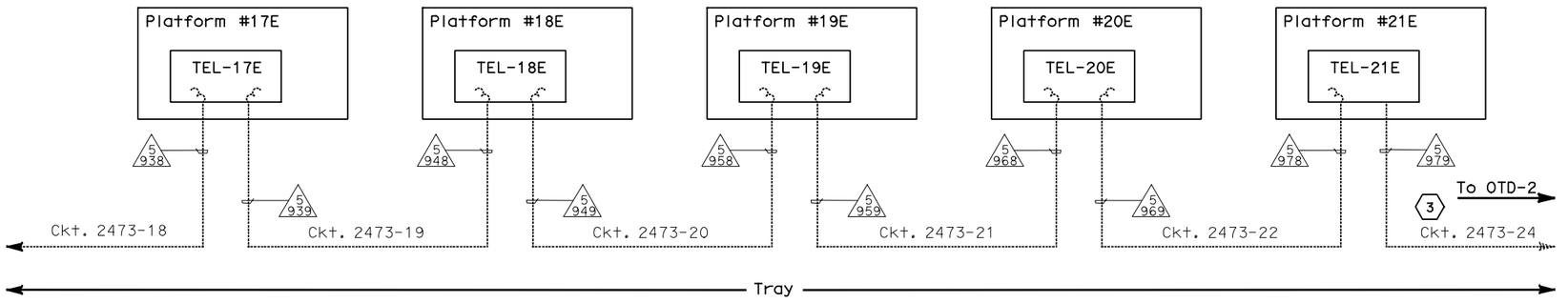

Caltrans Metric

DIST	COUNTY	ROUTE	KILOMETER POST TOTAL PROJECT	SHEET No	TOTAL SHEETS
04	SF,Ala	80	12.2/14.3 0.0/4.0	407a 09S76	1204

Syn Yee Chin 03/08/10
REGISTERED ELECTRICAL ENGINEER DATE

REGISTERED PROFESSIONAL ENGINEER
SYN YEE CHIN
No. 18186
Exp. 09/30/2011
ELECTRICAL
STATE OF CALIFORNIA

05-06-2010
PLANS APPROVAL DATE

PB AMERICAS, Inc.
A Parsons Brinckerhoff Company
303 Second St., Suite 700N
San Francisco, CA 94107-1317

The State of California or its officers or agents shall not be responsible for the accuracy or completeness of electronic copies of this plan sheet.

Caltrans now has a web site! To get to the web site, go to http://www.dot.ca.gov

NOTES:

1. All circuits (50 pair #18) shown on this drawing have been installed in the TOS/COM trays spanning the entire Skyway. In the girder at the following platforms the circuits have been coiled in the trays. Contractor shall pull the 50 pair #18 Telephone Cables from the trays into the Telephone Terminal Boxes as follows:

   At platform 09E: Pull ckt #2473-10 in conduit # 5858 to TEL-09E.
   At platform 09E: Pull ckt #2473-11 in conduit # 5859 to TEL-09E.
   At platform 10E: Pull ckt #2473-11 in conduit # 5868 to TEL-10E.
   At platform 10E: Pull ckt #2473-12 in conduit # 5869 to TEL-10E.
   At platform 11E: Pull ckt #2473-12 in conduit # 5878 to TEL-11E.
   At platform 11E: Pull ckt #2473-13 in conduit # 5879 to TEL-11E.
   At platform 12E: Pull ckt #2473-13 in conduit # 5888 to TEL-12E.
   At platform 12E: Pull ckt #2473-14 in conduit # 5889 to TEL-12E.
   At platform 13E: Pull ckt #2473-14 in conduit # 5898 to TEL-13E.

2. All circuits not shown in Note 1 above have been pulled by others to their respective Telephone Terminal Box.

3. For arrangement of conduits routing to the service platforms see sheets E-820 through E-834.

4. All conduits shown on this drawing are existing.

SHEET NOTES:

(1) The 50 pair #18 telephone cables are coiled in the trays in the girder at the platform locations shown.

(2) The SAS Contractor is responsible for pulling and terminating Ckt. #2473-10.

(3) The OTD-2 contractor is responsible for pulling and terminating Ckt. #2473-24.

(4) Contractor shall terminate all 50 pair #18 cables in the Telephone Terminal Boxes, unless otherwise noted.

REQUEST FOR INFORMATION NOT ADDRESSED IN THIS CCO REMAIN IN FORCE

MARK	DATE	DESCRIPTIONS	BY	CH'D	CCO#
		REVISIONS			
0	03/08/10	MEP INTEGRATION	JE	SYC	110

CONTRACT CHANGE ORDER NO._____
SHEET _____ OF _____

DETAILS
SCADA REMOTE TERMINAL UNIT SYSTEM
TELEPHONE CABLE BLOCK DIAGRAM
EASTBOUND

NO SCALE

E-963

DATE	REVISED BY
01/10	FW
01/10	SYC

CALCULATED/DESIGNED BY
CHECKED BY

DESIGN OVERSIGHT
BEHZAD GOLEMOHAMMADI

STATE OF CALIFORNIA - DEPARTMENT OF TRANSPORTATION
Caltrans

THIS PLAN ACCURATE FOR ELECTRICAL WORK ONLY.

LAST REVISION 00-00-00
DATE PLOTTED => 06-MAY-2010
TIME PLOTTED => 19:12

FOR REDUCED PLANS ORIGINAL SCALE IS IN MILLIMETERS 0 20 40 60 80

DGN FILE =>04-0120f1_E-963.dgn
USERNAME =>llorico

CU 04251

EA 0120F1

DIST	COUNTY	ROUTE	KILOMETER POST TOTAL PROJECT	SHEET No	TOTAL SHEETS
04	SF,Ala	80	12.2/14.3 0.0/4.0	407a 09S77	1204

Caltrans Metric

Syn Yee Chin 03/08/10
REGISTERED ELECTRICAL ENGINEER DATE

05-06-2010
PLANS APPROVAL DATE

REGISTERED PROFESSIONAL ENGINEER SYN YEE CHIN No. 18186 Exp. 09/30/2011 ELECTRICAL STATE OF CALIFORNIA

PB AMERICAS, Inc.
A Parsons Brinckerhoff Company
303 Second St., Suite 700N
San Francisco, CA 94107-1317

The State of California or its officers or agents shall not be responsible for the accuracy or completeness of electronic copies of this plan sheet.

Caltrans now has a web site! To get to the web site, go to http://www.dot.ca.gov

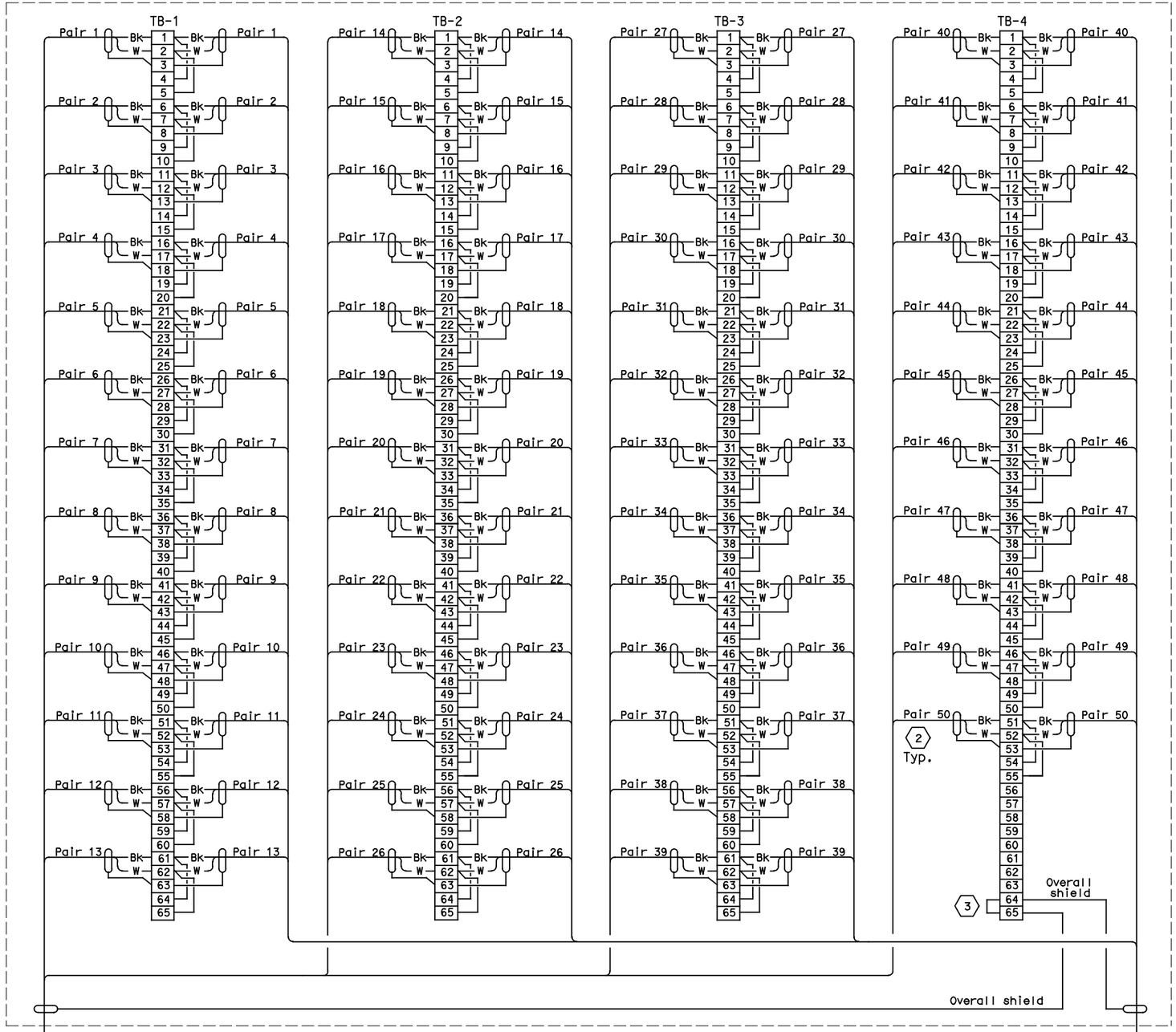

TELEPHONE COMMUNICATION TERMINAL BOX

Shown for TEL-09W, See Table A

Ckt. #1473-10 (1)

To Telephone Communications Terminal Box Tel-08W (SAS Contract) Contract 04-0120F4)

Ckt. #1473-11 (1)

To Telephone Communications Terminal Box Tel-10W

THIS PLAN ACCURATE FOR ELECTRICAL WORK ONLY.

TABLE A

Westbound	
Circuit No.	Routed To
1473-10	Telephone Term. Box Tel-09W
1473-11	Telephone Term. Box Tel-09W
1473-11	Telephone Term. Box Tel-10W
1473-12	Telephone Term. Box Tel-10W
1473-12	Telephone Term. Box Tel-11W
1473-13	Telephone Term. Box Tel-11W
1473-13	Telephone Term. Box Tel-12W
1473-14	Telephone Term. Box Tel-12W
1473-14	Telephone Term. Box Tel-13W
1473-123	Telephone Term. Box Tel-13W
1473-123	Telephone Term. Box Tel-Sub. WB
1473-15	Telephone Term. Box Tel-Sub. WB
1473-15	Telephone Term. Box Tel-14W
1473-16	Telephone Term. Box Tel-14W
1473-16	Telephone Term. Box Tel-15W
1473-17	Telephone Term. Box Tel-15W
1473-17	Telephone Term. Box Tel-16W
1473-18	Telephone Term. Box Tel-16W
1473-18	Telephone Term. Box Tel-17W
1473-19	Telephone Term. Box Tel-17W
1473-19	Telephone Term. Box Tel-18W
1473-20	Telephone Term. Box Tel-18W
1473-20	Telephone Term. Box Tel-19W
1473-21	Telephone Term. Box Tel-19W
1473-21	Telephone Term. Box Tel-20W
1473-22	Telephone Term. Box Tel-20W
1473-22	Telephone Term. Box Tel-21W
1473-24	Telephone Term. Box Tel-21W

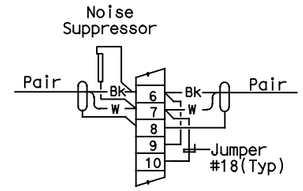

TYPICAL WIRING EACH PAIR

SHEET NOTES:

1. For cable/circuit numbers, see Table A.
2. Contractor shall terminate the 50 pair #18 telephone communication cable on the terminal blocks.
3. Do not ground shield.

REQUEST FOR INFORMATION NOT ADDRESSED IN THIS CCO REMAIN IN FORCE

MARK	DATE	DESCRIPTIONS	BY	CH'D	CCO#
0	03/08/10	MEP INTEGRATION	JE	SYC	110

REVISIONS

CONTRACT CHANGE ORDER NO._____
SHEET_____ OF _____

DETAILS
SCADA REMOTE TERMINAL UNIT SYSTEM
TELEPHONE TERMINAL BOX
WIRING DIAGRAM - WESTBOUND

NO SCALE

E-964

STATE OF CALIFORNIA - DEPARTMENT OF TRANSPORTATION

Caltrans

DESIGN OVERSIGHT: BEHZAD GOLEMOHAMMADI

CALCULATED/DESIGNED BY: SYC DATE 01/10 REVISED BY

CHECKED BY: FW 01/10 DATE REVISED

DATE PLOTTED => 06-MAY-2010
TIME PLOTTED => 19:12

LAST REVISION 00-00-00

FOR REDUCED PLANS ORIGINAL SCALE IS IN MILLIMETERS 0 20 40 60 80

DGN FILE =>04-0120f1_E-964.dgn
USERNAME =>llorico

CU 04251

EA 0120F1

DIST	COUNTY	ROUTE	KILOMETER POST TOTAL PROJECT	SHEET No	TOTAL SHEETS
04	SF,Ala	80	12.2/14.3 0.0/4.0	407a 09S78	1204

Caltrans Metric

Syn Yee Chin 03/08/10
REGISTERED ELECTRICAL ENGINEER DATE

05-06-2010
PLANS APPROVAL DATE

REGISTERED PROFESSIONAL ENGINEER SYN YEE CHIN No. 18186 Exp. 09/30/2011 ELECTRICAL STATE OF CALIFORNIA

PB AMERICAS, Inc.
A Parsons Brinckerhoff Company
303 Second St., Suite 700N
San Francisco, CA 94107-1317

The State of California or its officers or agents shall not be responsible for the accuracy or completeness of electronic copies of this plan sheet.

Caltrans now has a web site! To get to the web site, go to http://www.dot.ca.gov

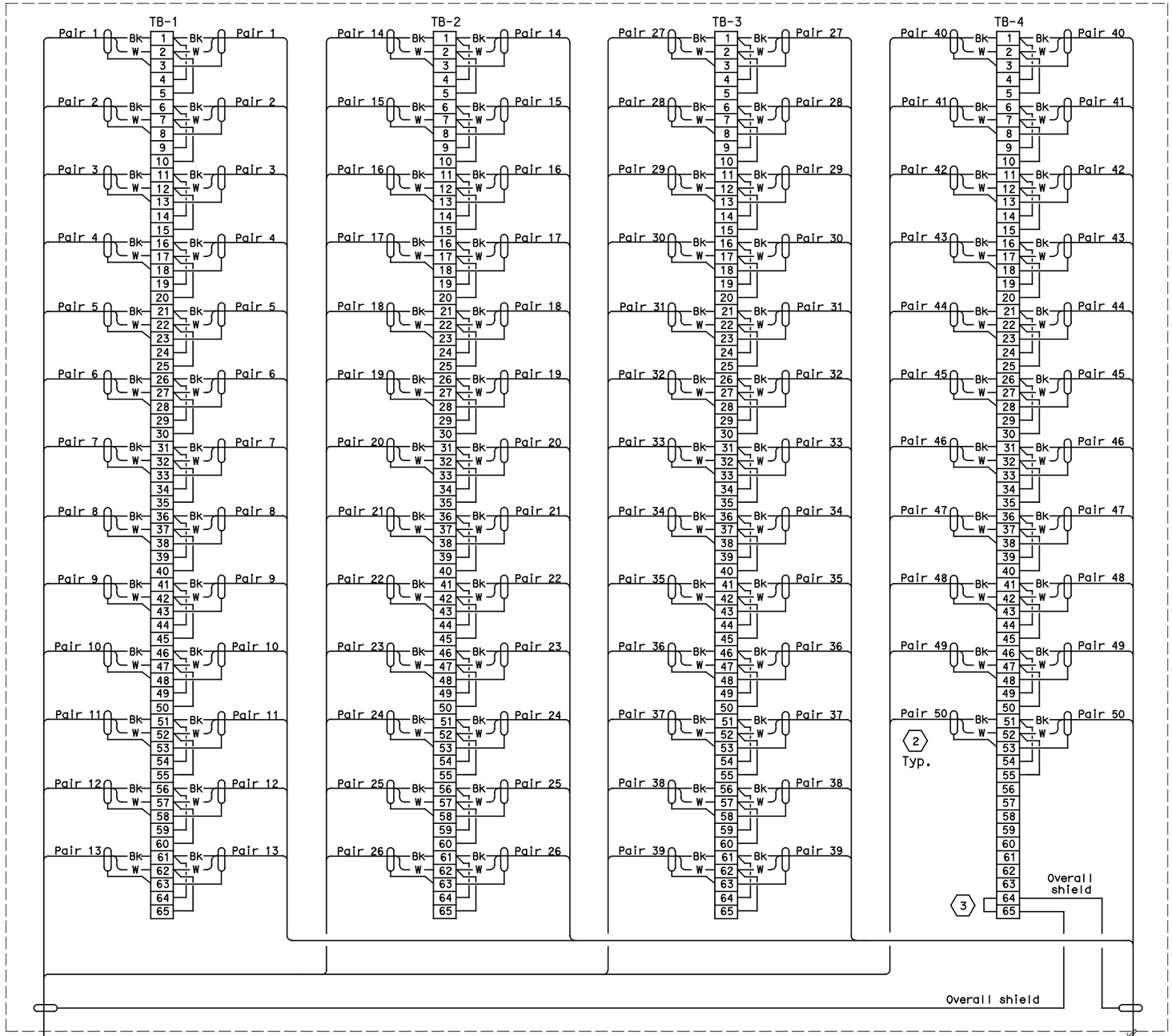

TELEPHONE COMMUNICATION TERMINAL BOX

Shown for TEL-09E, See Table A

THIS PLAN ACCURATE FOR ELECTRICAL WORK ONLY.

TABLE A

Eastbound	
Circuit No.	Routed To (Termination Location)
2473-10	Telephone Term. Box Tel-09E
2473-11	Telephone Term. Box Tel-09E
2473-11	Telephone Term. Box Tel-10E
2473-12	Telephone Term. Box Tel-10E
2473-12	Telephone Term. Box Tel-11E
2473-13	Telephone Term. Box Tel-11E
2473-13	Telephone Term. Box Tel-12E
2473-14	Telephone Term. Box Tel-12E
2473-14	Telephone Term. Box Tel-13E
2473-23	Telephone Term. Box Tel-13E
2473-23	Telephone Term. Box Tel-Sub. EB
2473-15	Telephone Term. Box Tel-Sub. EB
2473-15	Telephone Term. Box Tel-14E
2473-16	Telephone Term. Box Tel-14E
2473-16	Telephone Term. Box Tel-15E
2473-17	Telephone Term. Box Tel-15E
2473-17	Telephone Term. Box Tel-16E
2473-18	Telephone Term. Box Tel-16E
2473-18	Telephone Term. Box Tel-17E
2473-19	Telephone Term. Box Tel-17E
2473-19	Telephone Term. Box Tel-18E
2473-20	Telephone Term. Box Tel-18E
2473-20	Telephone Term. Box Tel-19E
2473-21	Telephone Term. Box Tel-19E
2473-21	Telephone Term. Box Tel-20E
2473-22	Telephone Term. Box Tel-20E
2473-22	Telephone Term. Box Tel-21E
2473-24	Telephone Term. Box Tel-21E

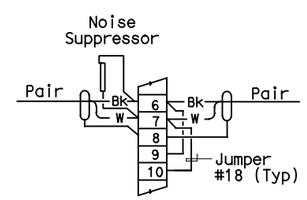

TYPICAL WIRING EACH PAIR

SHEET NOTES:

1. For cable/circuit numbers, see Table A.
2. Contractor shall terminate the 50 pair #18 telephone communication cable on the terminal blocks.
3. Do not ground shield.

REQUEST FOR INFORMATION NOT ADDRESSED IN THIS CCO REMAIN IN FORCE

MARK	DATE	DESCRIPTIONS	BY	CH'D	CCO#
0	03/08/10	MEP INTEGRATION	JE	SYC	110

REVISIONS

CONTRACT CHANGE ORDER NO._____
SHEET _____ OF _____

DETAILS
SCADA REMOTE TERMINAL UNIT SYSTEM
TELEPHONE TERMINAL BOX
WIRING DIAGRAM - EASTBOUND

NO SCALE

E-965

STATE OF CALIFORNIA - DEPARTMENT OF TRANSPORTATION
Caltrans

DESIGN OVERSIGHT: BEHZAD GOLEMOHAMMADI
CALCULATED/DESIGNED BY: SYC DATE 01/10
CHECKED BY: FW 01/10
REVISED BY
DATE REVISED

FOR REDUCED PLANS ORIGINAL SCALE IS IN MILLIMETERS 0 20 40 60 80

DGN FILE =>04-0120f1_E-965.dgn
USERNAME =>llorico

CU 04251 EA 0120F1

LAST REVISION 00-00-00
DATE PLOTTED => 06-MAY-2010
TIME PLOTTED => 19:12

DIST	COUNTY	ROUTE	KILOMETER POST TOTAL PROJECT	SHEET No	TOTAL SHEETS
04	SF, Ala	80	12.2/14.3 0.0/4.0	407a 09S79	1204

Syn Yee Chin 03/08/10
REGISTERED ELECTRICAL ENGINEER DATE

SYN YEE CHIN
No. 18186
Exp. 09/30/2011
ELECTRICAL
REGISTERED PROFESSIONAL ENGINEER
STATE OF CALIFORNIA

05-06-2010
PLANS APPROVAL DATE

PB AMERICAS, Inc.
A Parsons Brinckerhoff Company
303 Second St., Suite 700N
San Francisco, CA 94107-1317

The State of California or its officers or agents shall not be responsible for the accuracy or completeness of electronic copies of this plan sheet.

Caltrans now has a web site! To get to the web site, go to http://www.dot.ca.gov

THIS SHEET IS INTENTIONALLY LEFT BLANK

E-966

REVISED BY	DATE REVISED

	DATE	SYC
CALCULATED/ DESIGNED BY		
CHECKED BY	01/10	FW

DESIGN OVERSIGHT
BEHZAD GOLEMOHAMMADI

STATE OF CALIFORNIA - DEPARTMENT OF TRANSPORTATION
Caltrans

THIS PLAN ACCURATE FOR ELECTRICAL WORK ONLY.

LAST REVISION 00-00-00
DATE PLOTTED => 06-MAY-2010
TIME PLOTTED => 19:12

FOR REDUCED PLANS ORIGINAL SCALE IS IN MILLIMETERS 0 20 40 60 80

DGN FILE =>04-0120f1_E-966.dgn
USERNAME =>llorico

CU 04251

EA 0120F1

DIST	COUNTY	ROUTE	KILOMETER POST TOTAL PROJECT	SHEET No	TOTAL SHEETS
04	SF, Ala	80	12.2/14.3 0.0/4.0	407a 09S80	1204

Syn Yee Chin 03/08/10
REGISTERED ELECTRICAL ENGINEER DATE

SYN YEE CHIN
No. 18186
Exp. 09/30/2011
ELECTRICAL
REGISTERED PROFESSIONAL ENGINEER
STATE OF CALIFORNIA

05-06-2010
PLANS APPROVAL DATE

PB AMERICAS, Inc.
A Parsons Brinckerhoff Company
303 Second St., Suite 700N
San Francisco, CA 94107-1317

The State of California or its officers or agents shall not be responsible for the accuracy or completeness of electronic copies of this plan sheet.

Caltrans now has a web site! To get to the web site, go to http://www.dot.ca.gov

THIS SHEET IS INTENTIONALLY LEFT BLANK

E-967

THIS PLAN ACCURATE FOR ELECTRICAL WORK ONLY.

DESIGN OVERSIGHT	CALCULATED/ DESIGNED BY	SYC	DATE 01/10	REVISED BY
BEHZAD GOLEMOHAMMADI	CHECKED BY	FW	01/10	DATE REVISED

STATE OF CALIFORNIA - DEPARTMENT OF TRANSPORTATION
Caltrans

LAST REVISION 00-00-00
DATE PLOTTED => 06-MAY-2010
TIME PLOTTED => 19:12

FOR REDUCED PLANS ORIGINAL SCALE IS IN MILLIMETERS 0 20 40 60 80

DGN FILE =>04-0120f1_E-967.dgn
USERNAME =>llorico

CU 04251

EA 0120F1

DIST	COUNTY	ROUTE	KILOMETER POST TOTAL PROJECT	SHEET No	TOTAL SHEETS
04	SF, Ala	80	12.2/14.3 0.0/4.0	407a 09S81	1204

Syn Yee Chin 03/08/10
REGISTERED ELECTRICAL ENGINEER DATE

05-06-2010
PLANS APPROVAL DATE

REGISTERED PROFESSIONAL ENGINEER
SYN YEE CHIN
No. 18186
Exp. 09/30/2011
ELECTRICAL
STATE OF CALIFORNIA

PB AMERICAS, Inc.
A Parsons Brinckerhoff Company
303 Second St., Suite 700N
San Francisco, CA 94107-1317

The State of California or its officers or agents shall not be responsible for the accuracy or completeness of electronic copies of this plan sheet.

Caltrans now has a web site! To get to the web site, go to http://www.dot.ca.gov

THIS SHEET IS INTENTIONALLY LEFT BLANK

E-968

DESIGN OVERSIGHT	CALCULATED/ DESIGNED BY	SYC	DATE 01/10	REVISED BY
BEHZAD GOLEMOHAMMADI	CHECKED BY	FW	01/10	DATE REVISED

STATE OF CALIFORNIA - DEPARTMENT OF TRANSPORTATION
Caltrans

THIS PLAN ACCURATE FOR ELECTRICAL WORK ONLY.

LAST REVISION 00-00-00
DATE PLOTTED => 06-MAY-2010
TIME PLOTTED => 19:12

FOR REDUCED PLANS ORIGINAL SCALE IS IN MILLIMETERS 0 20 40 60 80

DGN FILE =>04-0120f1_E-968.dgn
USERNAME =>llorico

CU 04251

EA 0120F1

DIST	COUNTY	ROUTE	KILOMETER POST TOTAL PROJECT	SHEET No	TOTAL SHEETS
04	SF, Ala	80	12.2/14.3 0.0/4.0	407a 09S82	1204

Syn Yee Chin 03/08/10
REGISTERED ELECTRICAL ENGINEER DATE

05-06-2010
PLANS APPROVAL DATE

REGISTERED PROFESSIONAL ENGINEER
SYN YEE CHIN
No. 18186
Exp. 09/30/2011
ELECTRICAL
STATE OF CALIFORNIA

PB AMERICAS, Inc.
A Parsons Brinckerhoff Company
303 Second St., Suite 700N
San Francisco, CA 94107-1317

The State of California or its officers or agents shall not be responsible for the accuracy or completeness of electronic copies of this plan sheet.

Caltrans now has a web site! To get to the web site, go to http://www.dot.ca.gov

THIS SHEET IS INTENTIONALLY LEFT BLANK

E-969

THIS PLAN ACCURATE FOR ELECTRICAL WORK ONLY.

REVISED BY	DATE REVISED

	SYC	DATE 01/10
CALCULATED/ DESIGNED BY		
CHECKED BY	FW	01/10

DESIGN OVERSIGHT
BEHZAD GOLEMOHAMMADI

STATE OF CALIFORNIA - DEPARTMENT OF TRANSPORTATION
Caltrans

LAST REVISION 00-00-00
DATE PLOTTED => 06-MAY-2010
TIME PLOTTED => 19:13

FOR REDUCED PLANS ORIGINAL SCALE IS IN MILLIMETERS 0 20 40 60 80

DGN FILE =>04-0120f1_E-969.dgn
USERNAME =>llorico

CU 04251

EA 0120F1

DIST	COUNTY	ROUTE	KILOMETER POST TOTAL PROJECT	SHEET No	TOTAL SHEETS
04	SF,Ala	80	12.2/14.3 0.0/4.0	407a 09S83	1204

REGISTERED ELECTRICAL ENGINEER — 03/08/10 DATE

M.P. Lee No. 13435 Exp. 9-30-10 ELECTRICAL — REGISTERED PROFESSIONAL ENGINEER — STATE OF CALIFORNIA

05-06-2010
PLANS APPROVAL DATE

The State of California or its officers or agents shall not be responsible for the accuracy or completeness of electronic copies of this plan sheet.

Caltrans now has a web site! To get to the web site, go to http://www.dot.ca.gov

GENERAL NOTES:

1. This plan sheet is a record drawing of the Skyway Structures Contract. The Contractor shall verify the existing installation. See sheet EE-111 from the Skyway Structures contract no. 04-012024.
2. For more platform details, see Bridge Structures Girder Westbound and Eastbound, typical Details sheets.
3. All fiber optic cable shall be terminated in fiber distribution unit (FDU). All fiber strands shall have a TC connector on FDU.
4. FDU-W, FDU-E, and FDU-EX shall have the termination capacity of 72 fibers. FDU in each TOS cabinet shall have the termination capacity of 12 fibers.
5. Contractor shall supply the same number of fiber patch cords to match the termination capacity of each FDU.
6. Cable slack at each fiber splice closure shall be 9 meters minimum. Cable slack in each of TOS cabinet shall be 3 meters.
7. Contractor shall provide 72 fiber strand of fiber trunkline cable (FTC), 12 fiber strand of fiber pigtail cable (FPC) and fiber splice closures (FSC).
8. When fiber cables pass through a manhole, a minimum of 15 meter cable slack shall be coiled and placed on the side of of the manhole wall.
9. Each fiber cable sections shall be labeled per special provisions. In addition, each fiber link circuit number as shown on the plans shall be labeled at each end of fiber sections.
10. Ladder-type splice cable tray is acceptable to be used for TOS fiber splicing.

SHEET NOTES:

(1) Substations, and Service Platforms #14W, 14E, 19W, and 19E do not have TOS cabinets.

(2) Service Platforms 11W and 13E each have two TOS cabinets:
#TOS-11WA, #TOS-11WB,
#TOS-13EA, #TOS-13EB

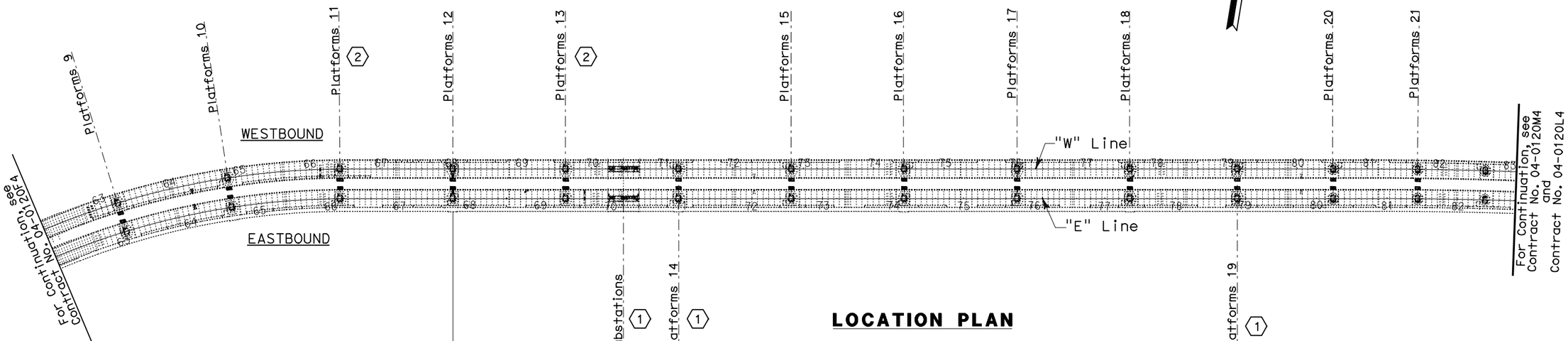

LOCATION PLAN

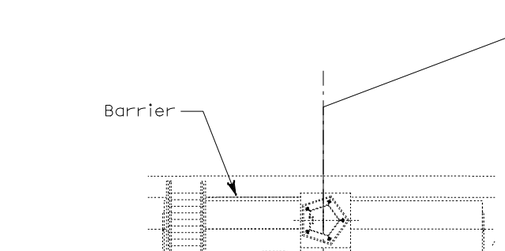

Typical Service Platform

ABBREVIATIONS:

FOTS	Fiber Optic Transmitters
FORS	Fiber Optic Receivers
MDCS	Multiple Duct Conduit System

LEGEND:

Fiber Splice Closure (FSC)

Service Platform

TOS Controller Cabinet

REQUEST FOR INFORMATION NOT ADDRESSED IN THIS CCO REMAIN IN FORCE					
MARK	DATE	REVISIONS DESCRIPTIONS	BY	CH'D	CCO#
0	03/08/10	MEP INTEGRATION	SYC	ML	110

CONTRACT CHANGE ORDER NO._____
SHEET _____ OF _____

TRAFFIC OPERATIONS SYSTEM
SKYWAY STRUCTURES
SERVICE PLATFORM LOCATION PLAN
SHEET 1 OF 2

SCALE: 1:3000

E-970

FOR NOTES, ABBREVIATIONS AND LEGEND, SEE SHEETS E-8 AND E-970

THIS PLAN ACCURATE FOR ELECTRICAL WORK ONLY.

ALL DIMENSIONS ARE IN METERS UNLESS OTHERWISE SHOWN

CALCULATED/ DESIGNED BY	ML	DATE 09/09	REVISED BY
CHECKED BY	FW	12/09	DATE REVISED

DESIGN OVERSIGHT
MICHAEL P. LEE

STATE OF CALIFORNIA - DEPARTMENT OF TRANSPORTATION
Caltrans

LAST REVISION DATE PLOTTED => 25-MAY-2010
00-00-00 TIME PLOTTED => 16:07

BORDER LAST REVISED 3/1/2009

RELATIVE BORDER SCALE IS IN MILLIMETERS 0 20 40 60 80

DGN FILE => 04-0120f1_E-970.dgn
USERNAME => llorico

CU 04251

EA 0120F1

DIST	COUNTY	ROUTE	KILOMETER POST TOTAL PROJECT	SHEET No	TOTAL SHEETS
04	SF,Ala	80	12.2/14.3 0.0/4.0	407a 09S84	1204

REGISTERED ELECTRICAL ENGINEER — 03/08/10 DATE

M.P. Lee
No. 13435
Exp. 9-30-10
ELECTRICAL
REGISTERED PROFESSIONAL ENGINEER
STATE OF CALIFORNIA

05-06-2010
PLANS APPROVAL DATE

The State of California or its officers or agents shall not be responsible for the accuracy or completeness of electronic copies of this plan sheet.

Caltrans now has a web site! To get to the web site, go to http://www.dot.ca.gov

CALCULATED/ DESIGNED BY	ML	DATE 09/09	REVISED BY
CHECKED BY	FW	12/09	DATE REVISED

DESIGN OVERSIGHT
MICHAEL P. LEE

STATE OF CALIFORNIA - DEPARTMENT OF TRANSPORTATION
Caltrans

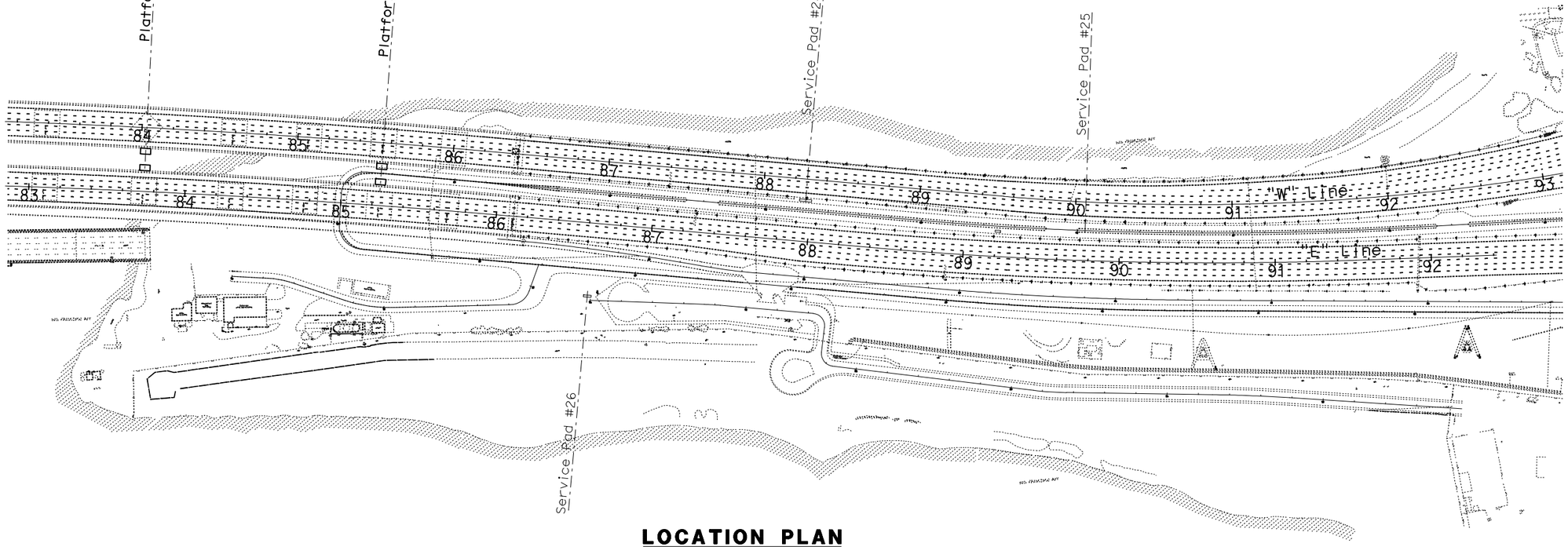

LOCATION PLAN

NOTES:

1. This plan sheet is a record drawing from Oakland Touchdown 1 contract. This drawing is not "As-built"; the Contractor shall verify the existing installation. See sheet E-202 from the Oakland Touchdown 1, contract No. 04-0120L4.
2. For more platform details, see Bridge Structures Girder typical Details sheets.

FOR NOTES, ABBREVIATIONS AND LEGEND, SEE SHEETS E-8 AND E-970

THIS PLAN ACCURATE FOR ELECTRICAL WORK ONLY.

REQUEST FOR INFORMATION NOT ADDRESSED IN THIS CCO REMAIN IN FORCE

MARK	DATE	REVISIONS DESCRIPTIONS	BY	CH'D	CCO#
0	03/08/10	MEP INTEGRATION	SYC	ML	110

CONTRACT CHANGE ORDER NO._____
SHEET _____ OF _____

TRAFFIC OPERATIONS SYSTEM
OAKLAND TOUCHDOWN
SERVICE PLATFORM LOCATION PLAN
SHEET 2 OF 2

NO SCALE

E-971

LAST REVISION 00-00-00 DATE PLOTTED => 25-MAY-2010 TIME PLOTTED => 13:19

BORDER LAST REVISED 3/1/2009

RELATIVE BORDER SCALE IS IN MILLIMETERS 0 20 40 60 80

DGN FILE => 04-0120f1_E-971.dgn
USERNAME => llorico

CU 04251

EA 0120F1

DIST	COUNTY	ROUTE	KILOMETER POST TOTAL PROJECT	SHEET No	TOTAL SHEETS
04	SF,Ala	80	12.2/14.3 0.0/4.0	407a 09S85	1204

REGISTERED ELECTRICAL ENGINEER — 03/08/10 DATE

M.P. Lee No. 13435 Exp. 9-30-10 ELECTRICAL — REGISTERED PROFESSIONAL ENGINEER — STATE OF CALIFORNIA

05-06-2010
PLANS APPROVAL DATE

The State of California or its officers or agents shall not be responsible for the accuracy or completeness of electronic copies of this plan sheet.

Caltrans now has a web site! To get to the web site, go to http://www.dot.ca.gov

Caltrans Metric

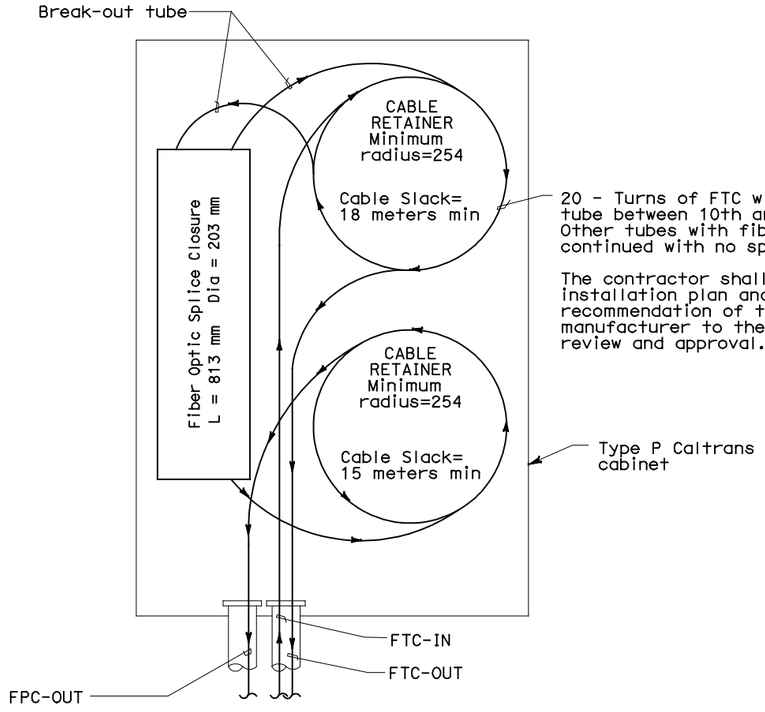

FIBER SPLICE DETAIL IN CABINET

TYPICAL AT SERVICE PLATFORM

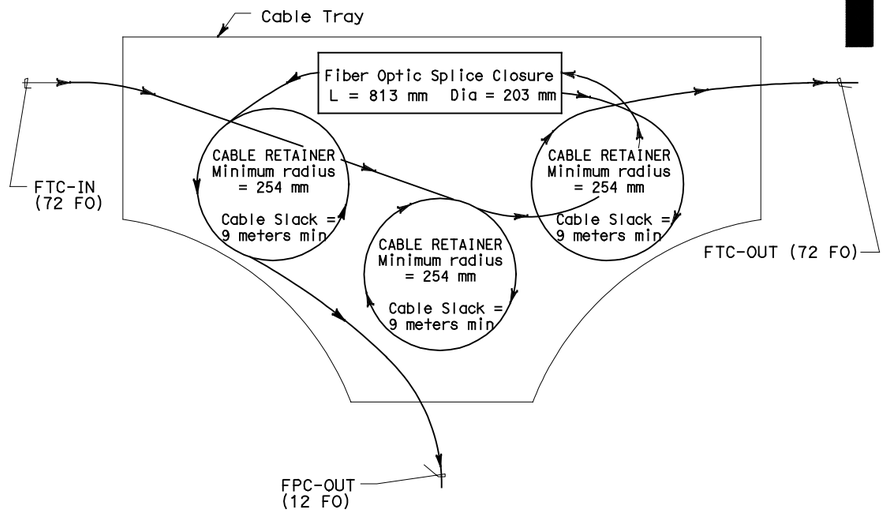

FIBER SPLICE DETAIL IN SPLICE CABLE TRAY

TYPICAL IN SKYWAY STRUCTURES

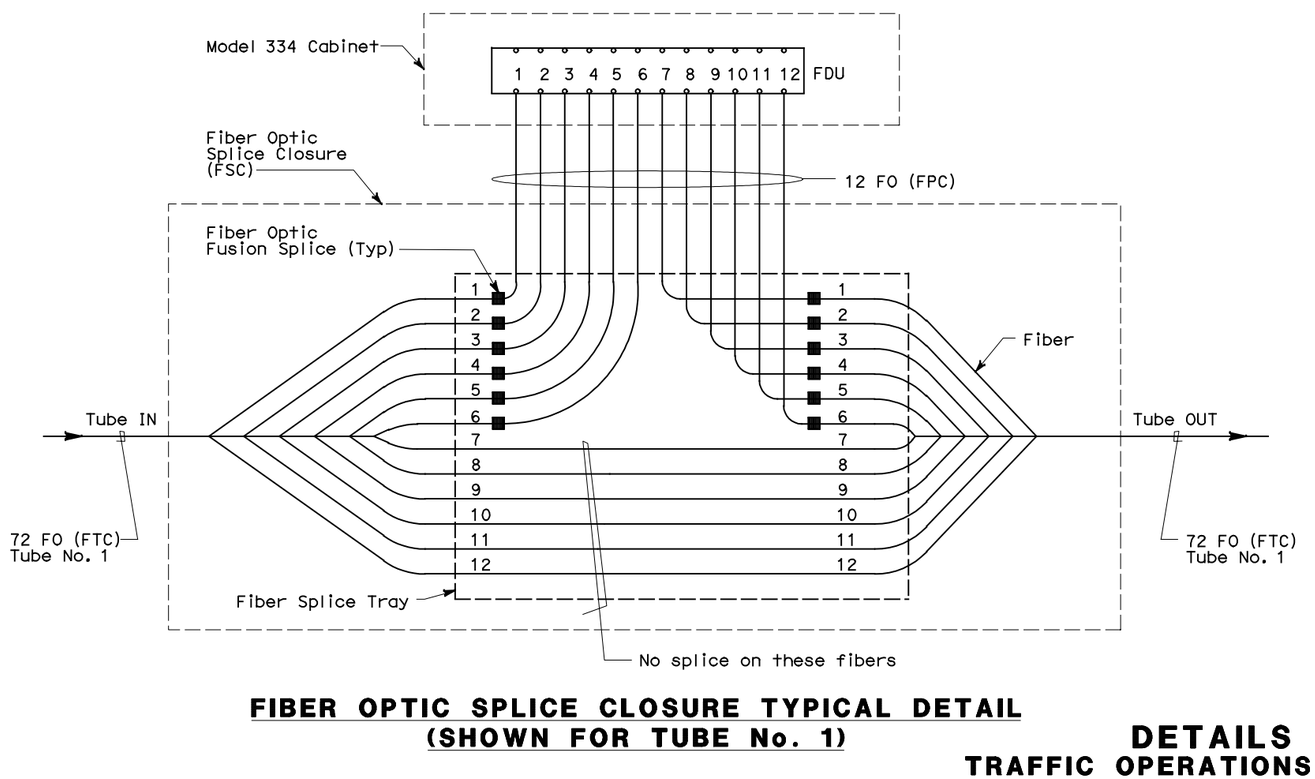

FIBER OPTIC SPLICE CLOSURE TYPICAL DETAIL (SHOWN FOR TUBE No. 1)

REQUEST FOR INFORMATION NOT ADDRESSED IN THIS CCO REMAIN IN FORCE					
MARK	DATE	REVISIONS DESCRIPTIONS	BY	CH'D	CCO#
0	01/29/10	MEP INTEGRATION	SYC	ML	110

CONTRACT CHANGE ORDER NO._____
SHEET_____ OF _____

DETAILS
TRAFFIC OPERATIONS SYSTEM
FIBER OPTIC SPLICE DETAIL

NO SCALE

E-972

FOR NOTES, ABBREVIATIONS AND LEGEND, SEE SHEETS E-8 AND E-970

THIS PLAN ACCURATE FOR ELECTRICAL WORK ONLY.

ALL DIMENSIONS ARE IN MILLIMETERS UNLESS OTHERWISE SHOWN

DESIGN OVERSIGHT	CALCULATED/ DESIGNED BY	CHECKED BY	DRAWN BY	DETAILED BY	REVISED BY	DATE REVISED
MICHAEL P. LEE	ML	FW			ML	12/09
					DATE 09/09	

STATE OF CALIFORNIA - DEPARTMENT OF TRANSPORTATION — Caltrans

LAST REVISION 00-00-00 — DATE PLOTTED => 25-MAY-2010 — TIME PLOTTED => 13:19

BORDER LAST REVISED 3/1/2009 — RELATIVE BORDER SCALE IS IN MILLIMETERS 0 20 40 60 80 — DGN FILE => 04-0120f1_E-972.dgn — USERNAME => llorico — CU 04251 — EA 0120F1

DIST	COUNTY	ROUTE	KILOMETER POST TOTAL PROJECT	SHEET No	TOTAL SHEETS
04	SF,Ala	80	12.2/14.3 0.0/4.0	407a 09S86	1204

03/08/10
REGISTERED ELECTRICAL ENGINEER DATE

M.P. Lee
No. 13435
Exp. 9-30-10
ELECTRICAL
REGISTERED PROFESSIONAL ENGINEER
STATE OF CALIFORNIA

05-06-2010
PLANS APPROVAL DATE

The State of California or its officers or agents shall not be responsible for the accuracy or completeness of electronic copies of this plan sheet.

Caltrans now has a web site! To get to the web site, go to http://www.dot.ca.gov

REQUEST FOR INFORMATION NOT ADDRESSED IN THIS CCO REMAIN IN FORCE					
0	03/08/10	MEP INTEGRATION	SYC	ML	110
MARK	DATE	DESCRIPTIONS	BY	CH'D	CCO#
REVISIONS					

CONTRACT CHANGE ORDER NO._____
SHEET _____ OF _____

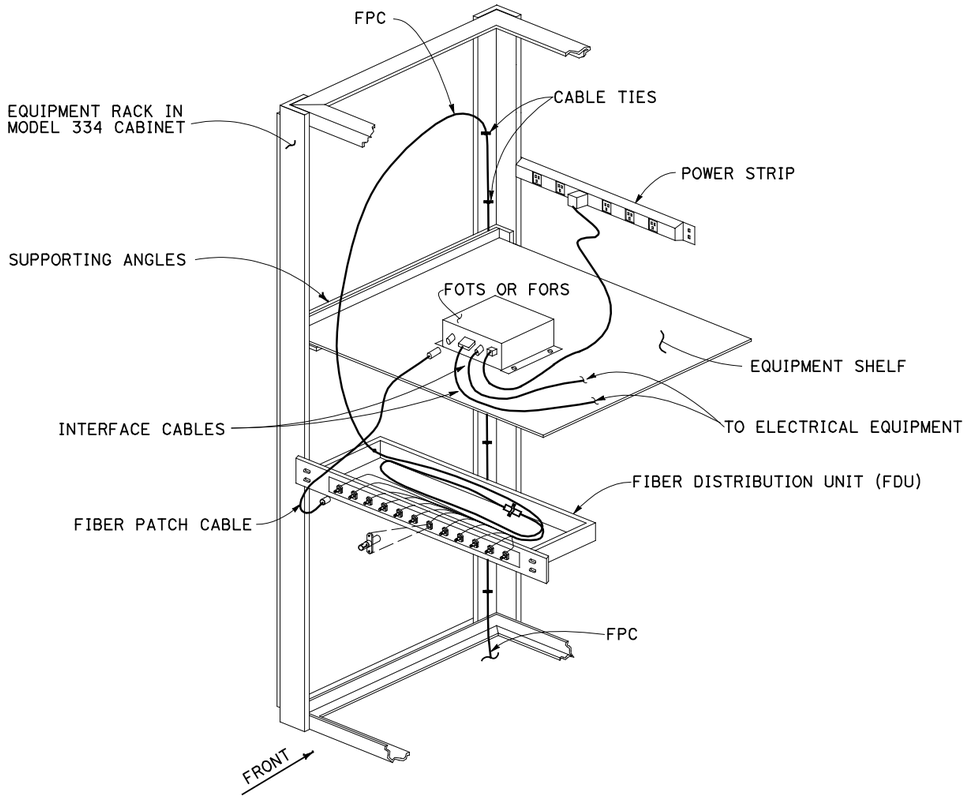

PARTIAL TOS CABINET EQUIPMENT LAYOUT

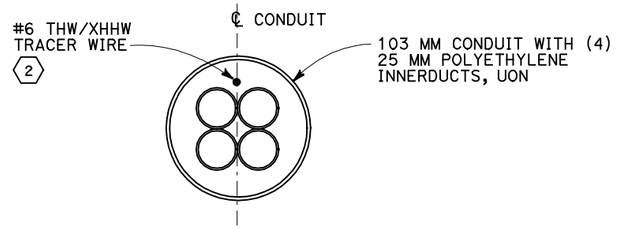

MDCS DETAIL 1

SHEET NOTES:

1. Innerducts shall be longitudinally grooved on both the inside and outside to facilitate pulling the innerducts into the conduit and pulling fiber optic cable into the innerduct. One innerduct shall be provided in each of the following colors: brown, blue, white, and black. Secure innerducts with clamps at appropriate spacing inside conduit.
2. The tracer wire shall be pulled inside of the fiber optic conduit in the voids outside of the innerducts.

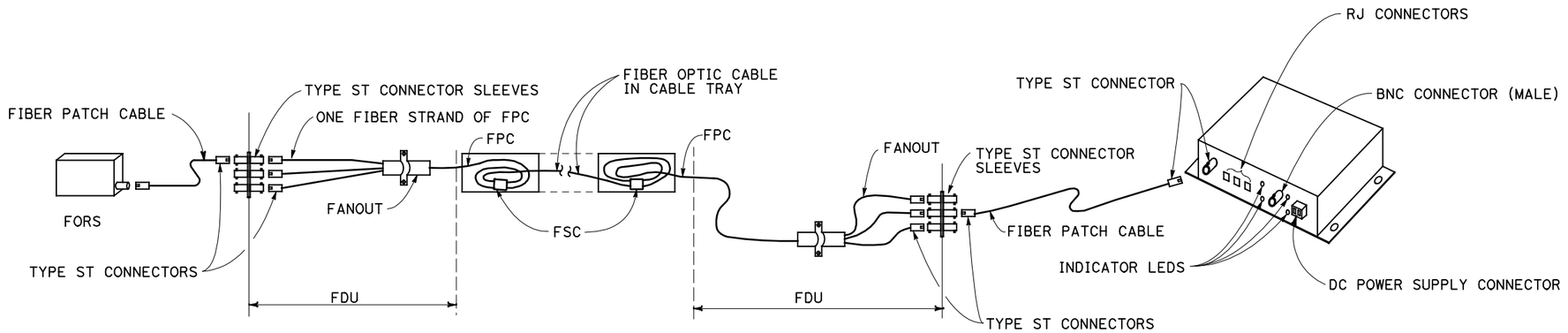

TOS CABINET ON SERVICE PLATFORM

CABINET IN COMMUNICATION HUB

TYPICAL FIBER OPTIC LINK CIRCUIT

DETAILS
TRAFFIC OPERATIONS SYSTEM
TYPICAL FIBER OPTIC LINK CIRCUIT AND MDCS DETAIL
NO SCALE

FOR NOTES, ABBREVIATIONS AND LEGEND, SEE SHEETS E-8 AND E-970

THIS PLAN ACCURATE FOR ELECTRICAL WORK ONLY.

E-973

DESIGN OVERSIGHT	CALCULATED/ DESIGNED BY	DATE	REVISED BY
MICHAEL P. LEE	CHECKED BY	12/09	DATE REVISED
STATE OF CALIFORNIA - DEPARTMENT OF TRANSPORTATION Caltrans	ML	FW	

LAST REVISION DATE PLOTTED => 25-MAY-2010
00-00-00 TIME PLOTTED => 13:19

DIST	COUNTY	ROUTE	KILOMETER POST TOTAL PROJECT	SHEET No	TOTAL SHEETS
04	SF,Ala	80	12.2/14.3 0.0/4.0	407a 09S87	1204

REGISTERED ELECTRICAL ENGINEER — 03/08/10 DATE

M.P. Lee No. 13435 Exp. 9-30-10 ELECTRICAL — REGISTERED PROFESSIONAL ENGINEER — STATE OF CALIFORNIA

05-06-2010
PLANS APPROVAL DATE

The State of California or its officers or agents shall not be responsible for the accuracy or completeness of electronic copies of this plan sheet.

Caltrans now has a web site! To get to the web site, go to http://www.dot.ca.gov

REQUEST FOR INFORMATION NOT ADDRESSED IN THIS CCO REMAIN IN FORCE

MARK	DATE	DESCRIPTIONS	BY	CH'D	CCO#
		REVISIONS			
0	01/29/10	MEP INTEGRATION	SYC	ML	110

CONTRACT CHANGE ORDER NO._____
SHEET _____ OF _____

DESIGN OVERSIGHT	CALCULATED/ DESIGNED BY	CHECKED BY	DATE	REVISED BY	DATE REVISED
MICHAEL P. LEE	ML	FW	09/09		12/09

STATE OF CALIFORNIA - DEPARTMENT OF TRANSPORTATION — Caltrans

(4)

		YBI-1				SAS			SKYWAY												OTD-1		OTD-2				
		YBI-SUB TOS-Y04 (FDU-W)	01WA 01W	03WA 03W	CCTV-W01 03WB 03W	04WA 04W	CCTV-E01B 06WA 06W	07WA 07W	09WA 09W	10WA 10W	11WA 11W	11WB 11W	CCTV-W03 12WA 12W	13WA 13W	15WA 15W	16WA 16W	17WA 17W	CCTV-W02 18WA 18W	20WA 20W	21WA 21W	22WA 22W	23WA 23W	CCTV-E10 26A 23W	24A 23W	CCTV-W03 25A 23W	SFOBB-HUB ADMIN BLDG TOS-A04 (FDU-W)	EQ ID cabinet ID FSC ID cabinet station
			W 52.18	W 54.44	W 54.44	W 56.38	W 58.18	W 59.62	W 63.23	W 64.83	W 66.43	W 66.43	W 68.03	W 69.63	W 72.83	W 74.43	W 76.03	W 77.63	W 80.51	W 81.71	W 84.04	W 85.55	MS 86+70	MN 88.25	MN 90.50		
Tube 1	Fiber																										
	1	X			X X				X X				X X				X X				X X				X X	X	Circuit 1
	2	X			X X				X X				X X				X X				X X				X X	X	Circuit 1
	3	X			X X				X X	(1)			X X	(1)			X X	(1)			X X	(1)			X X	(4) X	Circuit 2
	4	X			X X				X X				X X				X X				X X				X X	X	Circuit 2
	5	X			X X				X X				X X				X X				X X				X X	X	Circuit 3
	6	X			X X				X X				X X				X X				X X				X X	X	Circuit 3
	7	X																								X	SPARE
	8	X																								X	
	9	X																								X	
	10	X																								X	
	11	X																								X	
	12	X																								X	
Tube 2	13	X						X X				X X				X X				X X			X X			X	Circuit 4
	14	X						X X				X X				X X				X X			X X			X	Circuit 4
	15	X						X X				X X	(1)			X X	(1)			X X	(1)		X X	(4)		X	Circuit 5
	16	X						X X				X X				X X				X X			X X			X	Circuit 5
	17	X						X X				X X				X X				X X			X X			X	Circuit 6
	18	X						X X				X X				X X				X X			X X			X	Circuit 6
	19	X																								X	SPARE
	20	X																								X	
	21	X																								X	
	22	X																								X	
	23	X																								X	
	24	X																								X (1)	
Tube 3	25	X		X X			X X			X X				X X				X X						X X		X	Circuit 7
	26	X		X X			X X			X X				X X				X X						X X		X	Circuit 7
	27	X		X X			X X			X X	(1)			X X	(1)			X X	(1)					X X	(4)	X	Circuit 8
	28	X		X X			X X			X X				X X				X X						X X		X	Circuit 8
	29	X		X X			X X			X X				X X				X X						X X		X	Circuit 9
	30	X		X X			X X			X X				X X				X X						X X		X	Circuit 9
	31	X																								X	SPARE
	32	X																								X	
	33	X																								X	
	34	X																								X	
	35	X																								X	
	36	X																								X	
Tube 4	37	X	X X			X X				X X				X X				X X				X X				X	Circuit 10
	38	X	X X			X X				X X				X X				X X				X X				X	Circuit 10
	39	X	X X			X X				X X	(1)			X X	(1)			X X	(1)			X X	(3)			X	Circuit 11
	40	X	X X			X X				X X				X X				X X				X X				X	Circuit 11
	41	X	X X			X X				X X				X X				X X				X X				X	Circuit 12
	42	X	X X			X X				X X				X X				X X				X X				X	Circuit 12
	43	X																								X	SPARE
	44	X																								X	
	45	X																								X	
	46	X																								X	
	47	X																								X	
	48	X																								X	
Tube 5	49~60	X																								X	SPARES (2)
Tube 6	61~72	X																								X	SPARES

SHEET NOTES:

(1) Terminate fibers at this location, represented with bold "X".

(2) Spares. Terminate each fiber on FDU.

THIS PLAN ACCURATE FOR ELECTRICAL WORK ONLY.

(3) These terminations by others. See sheets E-661 and E-979.

(4) These terminations by others.

FOR NOTES, ABBREVIATIONS AND LEGEND, SEE SHEETS E-8 AND E-970

FIBER OPTIC TERMINATIONS - WESTBOUND

DETAILS
TRAFFIC OPERATIONS SYSTEM
FTC-WESTBOUND
NO SCALE

E-974

LAST REVISION 00-00-00 — DATE PLOTTED => 25-MAY-2010 — TIME PLOTTED => 13:19

BORDER LAST REVISED 3/1/2009 — RELATIVE BORDER SCALE IS IN MILLIMETERS 0 20 40 60 80 — DGN FILE => 04-0120f1_E-974.dgn — USERNAME => llorico — CU 04251 — EA 0120F1

DIST	COUNTY	ROUTE	KILOMETER POST TOTAL PROJECT	SHEET No	TOTAL SHEETS
04	SF,Ala	80	12.2/14.3 0.0/4.0	407a 09S88	1204

M.P. Lee 03/08/10
REGISTERED ELECTRICAL ENGINEER DATE

05-06-2010
PLANS APPROVAL DATE

REGISTERED PROFESSIONAL ENGINEER — M.P. Lee No. 13435 Exp. 9-30-10 ELECTRICAL — STATE OF CALIFORNIA

The State of California or its officers or agents shall not be responsible for the accuracy or completeness of electronic copies of this plan sheet.

Caltrans now has a web site! To get to the web site, go to http://www.dot.ca.gov

REQUEST FOR INFORMATION NOT ADDRESSED IN THIS CCO REMAIN IN FORCE

MARK	DATE	DESCRIPTIONS	BY	CH'D	CCO#
		REVISIONS			
0	03/08/10	MEP INTEGRATION	SYC	ML	110

CONTRACT CHANGE ORDER NO._____
SHEET _____ OF _____

REVISED BY	DATE REVISED
ML	FW
DATE 09/09	12/09

CALCULATED/DESIGNED BY
CHECKED BY

DESIGN OVERSIGHT
MICHAEL P. LEE

STATE OF CALIFORNIA - DEPARTMENT OF TRANSPORTATION
Caltrans

			YBI-1				SAS			SKYWAY										OTD-1				OTD-2					
		YBI-SUB TOS-Y04 (FDU-EX):	01WA	03WA	CCTV-W01 03WB	04WA	CCTV-E01B 06WA	07WA		09WA	10WA	11WA	11WB	CCTV-W03 12WA	13WA	15WA	16WA	17WA	CCTV-W02 18WA	20WA	21WA	22WA	23WA	CCTV-E10 26A	24A	24B	CCTV-W03 25A	SFOBB-HUB ADMIN BLDG TOS-A04 (FDU-EX)	EQ ID cabinet ID FSC ID cabinet station
			01W	03W	03W	04W	06W	07W		09W	10W	11W	11W	12W	13W	15W	16W	17W	18W	20W	21W	22W	23W	23W	23W	23W	23W		
			W 52.18	W 54.44	W 54.44	W 56.38	W 58.18	W 59.62		W 63.23	W 64.83	W 66.43	W 66.43	W 68.03	W 69.63	W 72.83	W 74.43	W 76.03	W 77.63	W 80.51	W 81.71	W 84.04	W 85.55	MS 86+70	MN 88.25	MN 88.25	MN 90.50		
Tube 1	Fiber																												
	1	X																										X	
	2	X																										X	
	3	X																										X	
	4	X																										X	
	5	X																										X	
	6	X																										X	
	7	X																										X	
	8	X																										X	
	9	X																										X	
	10	X																										X	
	11	X																										X	
	12	X																										X	
Tube 2	13	X																										X	
	14	X																										X	
	15	X																										X	
	16	X																										X	
	17	X																										X	
	18	X																										X	
	19	X																										X	
	20	X																										X	
	21	X																										X	
	22	X																										X	
	23	X																										X	1
	24	X																										X	
Tube 3	25	X																										X	
	26	X																										X	
	27	X																										X	
	28	X																										X	
	29	X																										X	
	30	X																										X	
	31	X																										X	
	32	X																										X	
	33	X																										X	
	34	X																										X	
	35	X																										X	
	36	X																										X	
Tube 4	37	X																										X	
	38	X																										X	
	39	X																										X	
	40	X																										X	
	41	X																										X	
	42	X																										X	
	43	X																										X	
	44	X																										X	
	45	X																										X	
	46	X																										X	
	47	X																										X	
	48	X																										X	
Tube 5	49~60	X																										X	
Tube 6	61~72	X																										X	

SHEET NOTES:

(1) Terminate fibers at this location, represented with bold "X".

(2) These terminations by others.

THIS PLAN ACCURATE FOR ELECTRICAL WORK ONLY.

FIBER OPTIC TERMINATIONS-EXPRESS WESTBOUND

FOR NOTES, ABBREVIATIONS AND LEGEND, SEE SHEETS E-8 AND E-970

DETAILS
TRAFFIC OPERATIONS SYSTEM FTC-EXPRESS WESTBOUND
NO SCALE

E-975

LAST REVISION DATE PLOTTED => 25-MAY-2010
00-00-00 TIME PLOTTED => 13:19

DIST	COUNTY	ROUTE	KILOMETER POST TOTAL PROJECT	SHEET No	TOTAL SHEETS
04	SF,Ala	80	12.2/14.3 0.0/4.0	407a 09S89	1204

REGISTERED ELECTRICAL ENGINEER — 03/08/10 DATE

M.P. Lee
No. 13435
Exp. 9-30-10
ELECTRICAL
REGISTERED PROFESSIONAL ENGINEER
STATE OF CALIFORNIA

05-06-2010
PLANS APPROVAL DATE

The State of California or its officers or agents shall not be responsible for the accuracy or completeness of electronic copies of this plan sheet.

Caltrans now has a web site! To get to the web site, go to http://www.dot.ca.gov

REQUEST FOR INFORMATION NOT ADDRESSED IN THIS CCO REMAIN IN FORCE

MARK	DATE	DESCRIPTIONS	BY	CH'D	CCO#
		REVISIONS			
0	03/08/10	MEP INTEGRATION	SYC	ML	110

CONTRACT CHANGE ORDER NO._____
SHEET _____ OF _____

DATE	REVISED BY	DATE REVISED
09/09	ML	12/09 FW

CALCULATED/DESIGNED BY
CHECKED BY

DESIGN OVERSIGHT
MICHAEL P. LEE

STATE OF CALIFORNIA - DEPARTMENT OF TRANSPORTATION
Caltrans

		YBI-SUB TOS-Y04 (FDU-E)	01EA 1E E 52.16	RM01 1E R1 51.80	02EA 2E E 53.70	03EA 3E E 54.38	04EA 4E E 56.29	CCTV-E01 06EA 6E E 58.10	07EA 7E E 59.54	09EA 9E E 63.08	10EA 10E E 64.62	11EA 11E E 66.15	12EA 12E E 67.75	13EA 13E E 69.36	CCTV-E02 13EB 13E E 69.36	15EA 15E E 72.55	16EA 16E E 74.16	17EA 17E E 75.75	18EA 18E E 77.36	CCTV-XXX 20EA 20E E 80.24	21EA 21E E 81.43	CCTV-E03 22EA 22E E 83.75	23EA 23E E 85.24	SFOBB-HUB ADMIN BLDG TOS-A04 (FDU-E)	EQ ID cabinet ID FSC ID cabinet station
			YBI-1				SAS			SKYWAY											OTD-1		OTD-2		
Tube 1	1	X	X X				X X				X X				X X				X X				X X	X	Circuit 1
	2	X	X X				X X				X X				X X				X X				X X	X	Circuit 1
	3	X	X X				X X				X X	(1)			X X	(1)			X X	(1)			X X	(4) X	Circuit 2
	4	X	X X				X X				X X				X X				X X				X X	X	Circuit 2
	5	X	X X				X X				X X				X X				X X				X X	X	Circuit 3
	6	X	X X				X X				X X				X X				X X				X X	X	Circuit 3
	7	X																						X	SPARE
	8	X																						X	
	9	X																						X	
	10	X																						X	
	11	X																						X	
	12	X																						X	
Tube 2	13	X		X X				X X				X X				X X				X X				X	Circuit 4
	14	X		X X				X X				X X				X X				X X				X	Circuit 4
	15	X		X X				X X				X X	(1)			X X	(1)			X X	(1)			X	Circuit 5
	16	X		X X				X X				X X				X X				X X				X	Circuit 5
	17	X		X X				X X				X X				X X				X X				X	Circuit 6
	18	X		X X				X X				X X				X X				X X				X	Circuit 6
	19	X																						X	SPARE
	20	X																						X	
	21	X																						X	
	22	X																						X	
	23	X																						X	
	24	X																						X (4)	
Tube 3	25	X			X X				X X				X X				X X				X X			X	Circuit 7
	26	X			X X				X X				X X				X X				X X			X	Circuit 7
	27	X			X X				X X				X X	(1)			X X	(1)			X X	(3)		X	Circuit 8
	28	X			X X				X X				X X				X X				X X			X	Circuit 8
	29	X			X X				X X				X X				X X				X X			X	Circuit 9
	30	X			X X				X X				X X				X X				X X			X	Circuit 9
	31	X																						X	SPARE
	32	X																						X	
	33	X																						X	
	34	X																						X	
	35	X																						X	
	36	X																						X	
Tube 4	37	X				X X				X X				X X				X X				X X		X	Circuit 10
	38	X				X X				X X				X X				X X				X X		X	Circuit 10
	39	X				X X				X X				X X				X X				X X		X	Circuit 11
	40	X				X X				X X				X X				X X				X X		X	Circuit 11
	41	X				X X				X X				X X				X X				X X		X	Circuit 12
	42	X				X X				X X				X X				X X				X X		X	Circuit 12
	43	X																						X	SPARE
	44	X																						X	
	45	X																						X	
	46	X																						X	
	47	X																						X	
	48	X																						X	
Tube 5	49~60	X																						X	SPARES
Tube 6	61~72	X																						X	SPARES (2)

SHEET NOTES:

(1) Terminate fibers at this location, represented with bold "X".

(2) Spares. Terminate each fiber on FDU.

THIS PLAN ACCURATE FOR ELECTRICAL WORK ONLY.

(3) These terminations by others. See sheets E-834, E-983, and E-984.

(4) These terminations by others.

FOR NOTES, ABBREVIATIONS AND LEGEND, SEE SHEETS E-8 AND E-970

FIBER OPTIC TERMINATIONS - EASTBOUND

DETAILS
TRAFFIC OPERATIONS SYSTEMS
FTC-EASTBOUND
NO SCALE

E-976

LAST REVISION DATE PLOTTED => 25-MAY-2010
00-00-00 TIME PLOTTED => 13:20

BORDER LAST REVISED 3/1/2009

RELATIVE BORDER SCALE IS IN MILLIMETERS 0 20 40 60 80

DGN FILE => 04-0120f1_E-976.dgn
USERNAME => llorico

CU 04251

EA 0120F1

DIST	COUNTY	ROUTE	KILOMETER POST TOTAL PROJECT	SHEET No	TOTAL SHEETS
04	SF,Ala	80	12.2/14.3 0.0/4.0	407a 09S90	1204

REGISTERED ELECTRICAL ENGINEER — 03/08/10 DATE

M.P. Lee No. 13435 Exp. 9-30-10 ELECTRICAL — REGISTERED PROFESSIONAL ENGINEER — STATE OF CALIFORNIA

05-06-2010
PLANS APPROVAL DATE

The State of California or its officers or agents shall not be responsible for the accuracy or completeness of electronic copies of this plan sheet.

Caltrans now has a web site! To get to the web site, go to http://www.dot.ca.gov

Caltrans Metric

CALCULATED/ DESIGNED BY	CHECKED BY	DATE	REVISED BY	DATE REVISED
ML	FW	09/09	12/09	

DESIGN OVERSIGHT
MICHAEL P. LEE

STATE OF CALIFORNIA - DEPARTMENT OF TRANSPORTATION
Caltrans

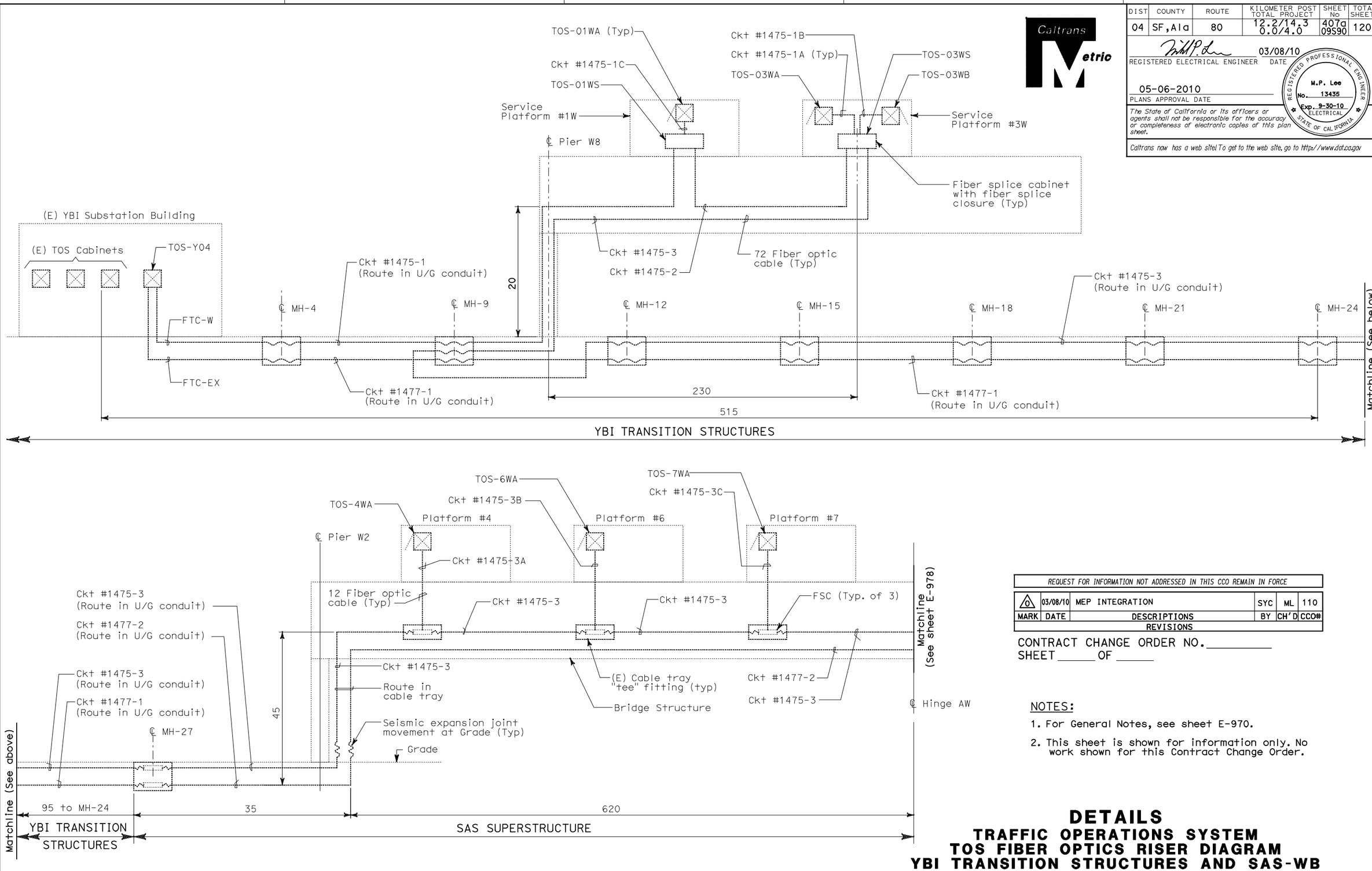

REQUEST FOR INFORMATION NOT ADDRESSED IN THIS CCO REMAIN IN FORCE					
MARK	DATE	REVISIONS	BY	CH'D	CCO#
0	03/08/10	MEP INTEGRATION	SYC	ML	110

CONTRACT CHANGE ORDER NO._____
SHEET_____ OF _____

NOTES:

1. For General Notes, see sheet E-970.
2. This sheet is shown for information only. No work shown for this Contract Change Order.

DETAILS
TRAFFIC OPERATIONS SYSTEM
TOS FIBER OPTICS RISER DIAGRAM
YBI TRANSITION STRUCTURES AND SAS-WB

NO SCALE

FOR NOTES, ABBREVIATIONS AND LEGEND, SEE SHEETS E-8 AND E-970

THIS PLAN ACCURATE FOR ELECTRICAL WORK ONLY.

E-977

LAST REVISION 00-00-00 DATE PLOTTED => 06-MAY-2010 TIME PLOTTED => 19:14

BORDER LAST REVISED 3/1/2009 | RELATIVE BORDER SCALE IS IN MILLIMETERS 0 20 40 60 80 | DGN FILE => 04-0120f1_E-977.dgn USERNAME => llorico | CU 04251 | EA 0120F1

DIST	COUNTY	ROUTE	KILOMETER POST TOTAL PROJECT	SHEET No	TOTAL SHEETS
04	SF,Ala	80	12.2/14.3 0.0/4.0	407a 09S91	1204

REGISTERED ELECTRICAL ENGINEER — 03/08/10 DATE

M.P. Lee No. 13435 Exp. 9-30-10 ELECTRICAL — REGISTERED PROFESSIONAL ENGINEER — STATE OF CALIFORNIA

05-06-2010
PLANS APPROVAL DATE

The State of California or its officers or agents shall not be responsible for the accuracy or completeness of electronic copies of this plan sheet.

Caltrans now has a web site! To get to the web site, go to http://www.dot.ca.gov

REQUEST FOR INFORMATION NOT ADDRESSED IN THIS CCO REMAIN IN FORCE					
MARK	DATE	REVISIONS DESCRIPTIONS	BY	CH'D	CCO#
0	03/08/10	MEP INTEGRATION	SYC	ML	110

CONTRACT CHANGE ORDER NO._____
SHEET _____ OF _____

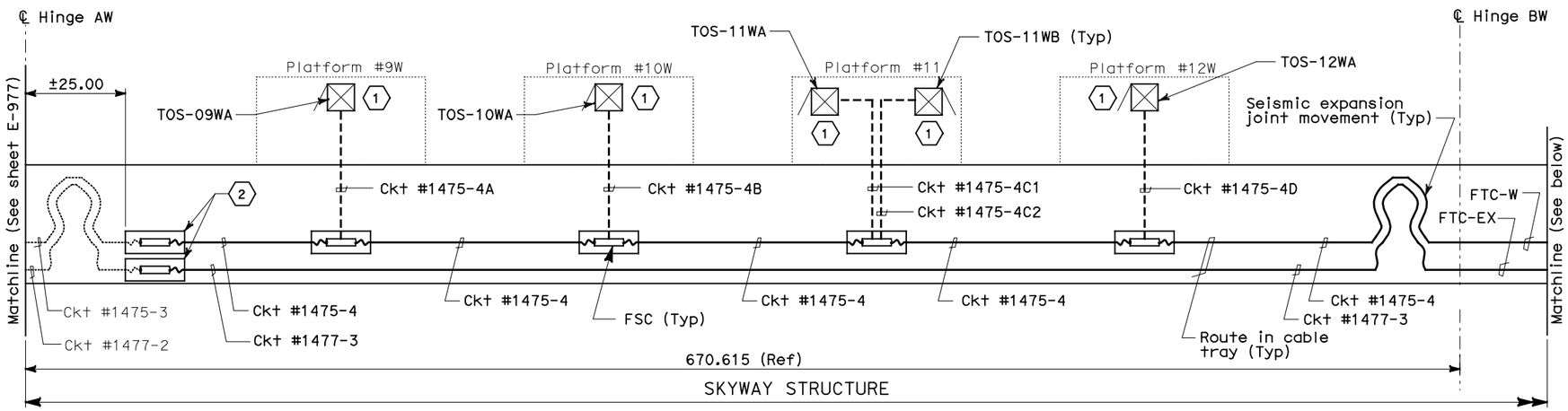

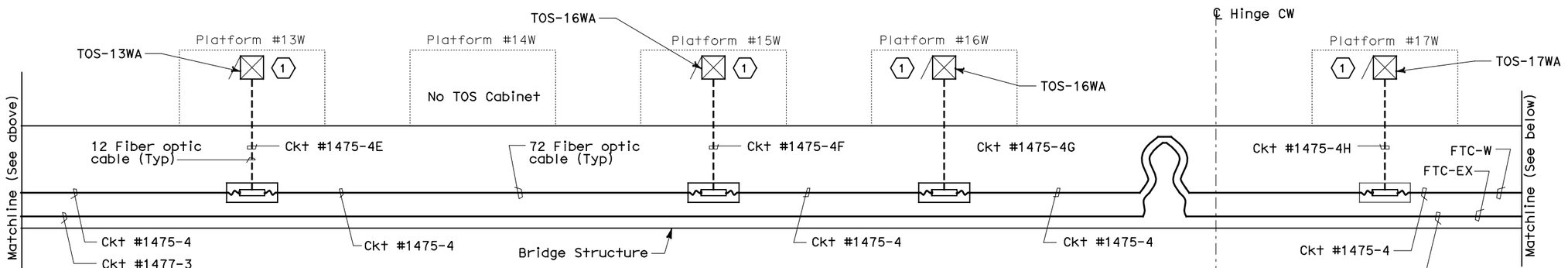

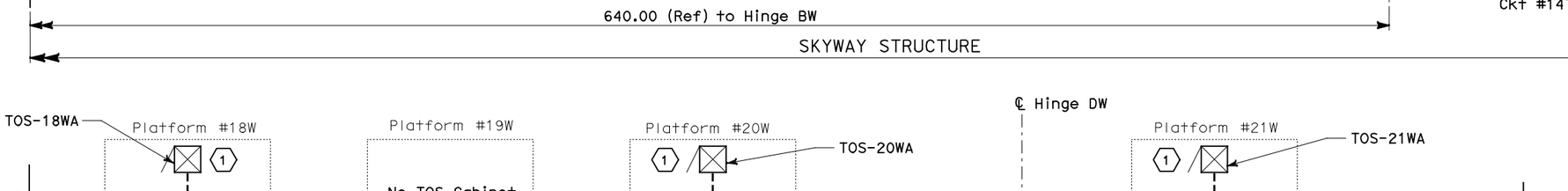

NOTES:

1. For General Notes, see sheet E-970.

SHEET NOTES:

(1) Contractor shall terminate FPC in TOS cabinet.

(2) The fiber optic splice at this location is based from the existing contract interface. However, the design intent of the fiber optic cable shall be continuous in the entire cable/circuit length. If cable needs to be spliced, use FSC and place FSC in splice cable tray.

DETAILS
TRAFFIC OPERATIONS SYSTEM
TOS FIBER OPTICS RISER DIAGRAM
SKYWAY STRUCTURES-WB

NO SCALE

FOR NOTES, ABBREVIATIONS AND LEGEND, SEE SHEETS E-8 AND E-970

THIS PLAN ACCURATE FOR ELECTRICAL WORK ONLY.

ALL DIMENSIONS ARE IN METERS UNLESS OTHERWISE SHOWN

E-978

DESIGN OVERSIGHT	CALCULATED/ DESIGNED BY	CHECKED BY
MICHAEL P. LEE	ML	FW

MARK	DATE	REVISED BY	DATE REVISED
1	09/09		12/09

STATE OF CALIFORNIA - DEPARTMENT OF TRANSPORTATION — Caltrans

LAST REVISION 00-00-00 — DATE PLOTTED => 06-MAY-2010 — TIME PLOTTED => 19:14

BORDER LAST REVISED 3/1/2009

RELATIVE BORDER SCALE IS IN MILLIMETERS 0 20 40 60 80

DGN FILE => 04-0120f1_E-978.dgn
USERNAME => llorico

CU 04251

EA 0120F1

DIST	COUNTY	ROUTE	KILOMETER POST TOTAL PROJECT	SHEET No	TOTAL SHEETS
04	SF,Ala	80	12.2/14.3 0.0/4.0	407a 09S92	1204

REGISTERED ELECTRICAL ENGINEER 03/08/10 DATE

05-06-2010
PLANS APPROVAL DATE

REGISTERED PROFESSIONAL ENGINEER M.P. Lee No. 13435 Exp. 9-30-10 ELECTRICAL STATE OF CALIFORNIA

The State of California or its officers or agents shall not be responsible for the accuracy or completeness of electronic copies of this plan sheet.

Caltrans now has a web site! To get to the web site, go to http://www.dot.ca.gov

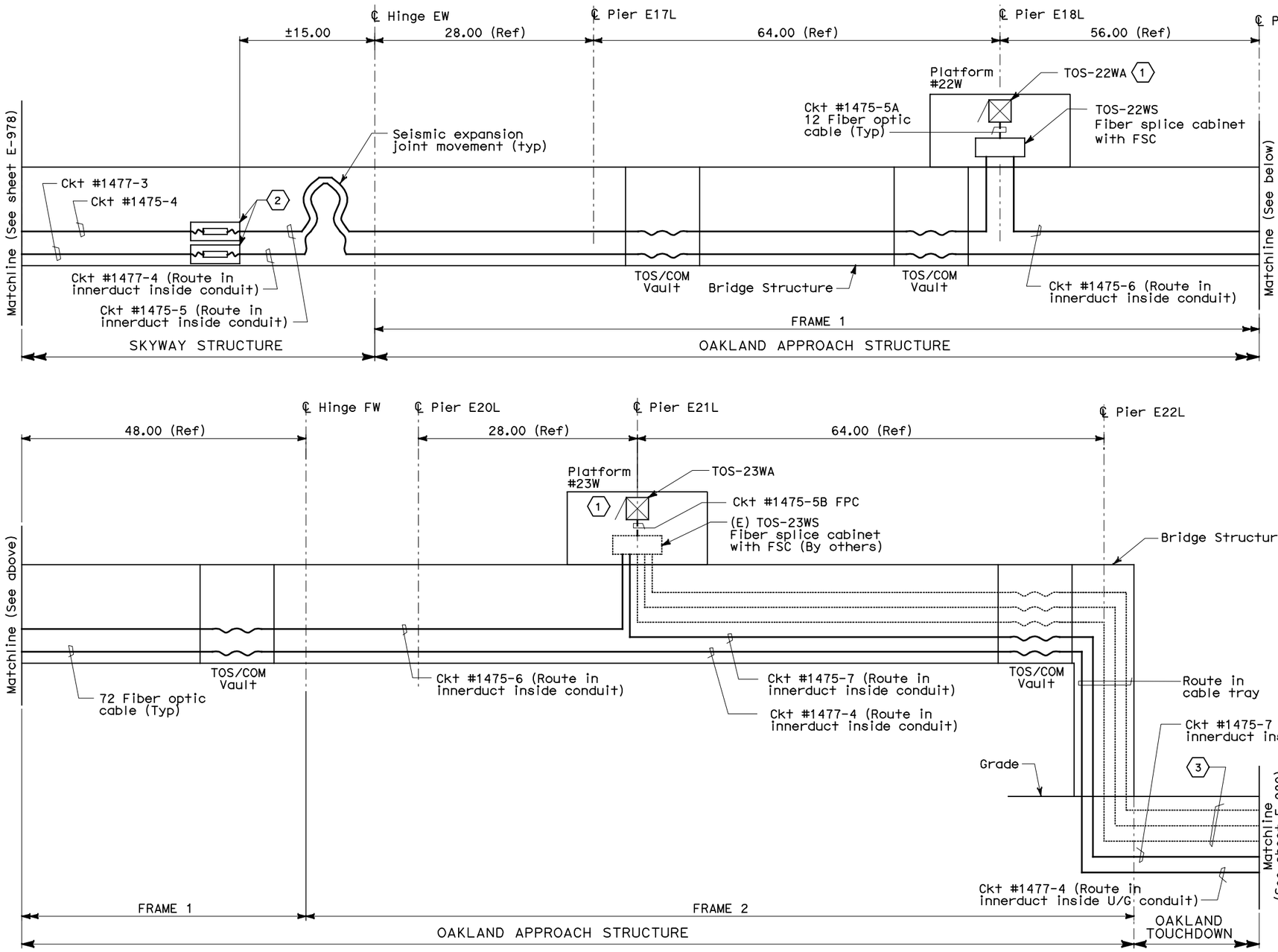

NOTES:

1. For General Notes, see sheet E-970.

SHEET NOTES:

1. Contractor shall terminate FPC in TOS cabinet.
2. The fiber optic splice at this location is based from the existing contract interface. However, the design intent of the fiber optic cable shall be continuous in the entire cable/circuit length. If cable needs to be spliced, use FSC and place FSC in splice cable tray.
3. Cable installation by others.

REQUEST FOR INFORMATION NOT ADDRESSED IN THIS CCO REMAIN IN FORCE

MARK	DATE	DESCRIPTIONS	BY	CH'D	CCO#
0	03/08/10	MEP INTEGRATION	SYC	ML	110

REVISIONS

CONTRACT CHANGE ORDER NO._____
SHEET _____ OF _____

DETAILS
TRAFFIC OPERATIONS SYSTEM
TOS FIBER OPTICS RISER DIAGRAM
SKYWAY AND OAKLAND TOUCHDOWN-WB

NO SCALE

FOR NOTES, ABBREVIATIONS AND LEGEND, SEE SHEETS E-8 AND E-970

THIS PLAN ACCURATE FOR ELECTRICAL WORK ONLY.

ALL DIMENSIONS ARE IN METERS UNLESS OTHERWISE SHOWN

E-979

STATE OF CALIFORNIA - DEPARTMENT OF TRANSPORTATION
Caltrans

DESIGN OVERSIGHT: MICHAEL P. LEE
CALCULATED/DESIGNED BY: ML DATE 09/09 REVISED BY
CHECKED BY: FW 12/09 DATE REVISED

LAST REVISION 00-00-00 DATE PLOTTED => 06-MAY-2010 TIME PLOTTED => 19:14

DIST	COUNTY	ROUTE	KILOMETER POST TOTAL PROJECT	SHEET No	TOTAL SHEETS
04	SF,Ala	80	12.2/14.3 0.0/4.0	407a 09S93	1204

REGISTERED ELECTRICAL ENGINEER — 03/08/10 DATE

M.P. Lee No. 13435 Exp. 9-30-10 ELECTRICAL — REGISTERED PROFESSIONAL ENGINEER — STATE OF CALIFORNIA

05-06-2010
PLANS APPROVAL DATE

The State of California or its officers or agents shall not be responsible for the accuracy or completeness of electronic copies of this plan sheet.

Caltrans now has a web site! To get to the web site, go to http://www.dot.ca.gov

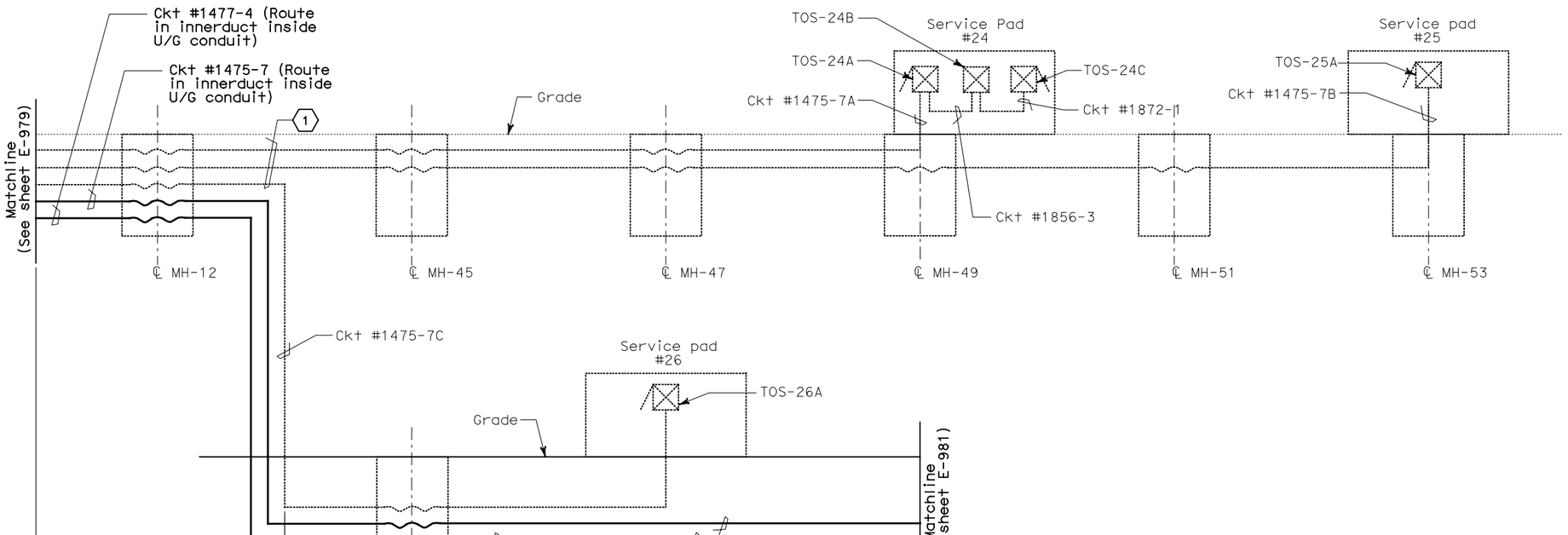

NOTES:

1. For General Notes, see sheet E-970.

SHEET NOTES:

(1) Cable installation by others, to Service Pads #24, #25 and #26.

REQUEST FOR INFORMATION NOT ADDRESSED IN THIS CCO REMAIN IN FORCE					
0	03/08/10	MEP INTEGRATION	SYC	ML	110
MARK	DATE	DESCRIPTIONS	BY	CH'D	CCO#
REVISIONS					

CONTRACT CHANGE ORDER NO._____
SHEET_____OF_____

DETAILS
TRAFFIC OPERATIONS SYSTEM
TOS FIBER OPTICS RISER DIAGRAM
OAKLAND TOUCHDOWN-MEDIAN

NO SCALE

E-980

FOR NOTES, ABBREVIATIONS AND LEGEND, SEE SHEETS E-8 AND E-970

THIS PLAN ACCURATE FOR ELECTRICAL WORK ONLY.

CALCULATED/ DESIGNED BY	ML	09/09	REVISED BY
CHECKED BY	FW	12/09	DATE REVISED

DESIGN OVERSIGHT — MICHAEL P. LEE

STATE OF CALIFORNIA - DEPARTMENT OF TRANSPORTATION — Caltrans

DATE PLOTTED => 06-MAY-2010
TIME PLOTTED => 19:14
LAST REVISION 00-00-00

BORDER LAST REVISED 3/1/2009 | RELATIVE BORDER SCALE IS IN MILLIMETERS 0 20 40 60 80 | DGN FILE => 04-0120f1_E-980.dgn | USERNAME => llorico | CU 04251 | EA 0120F1

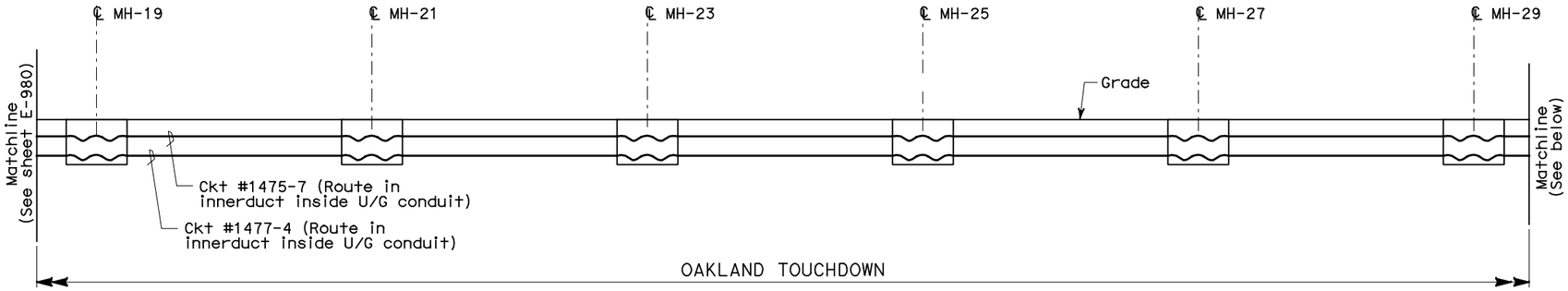

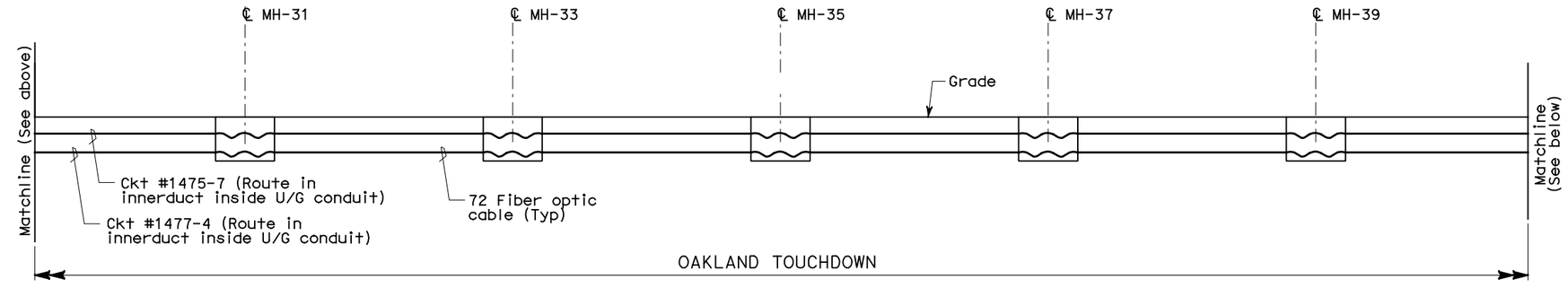

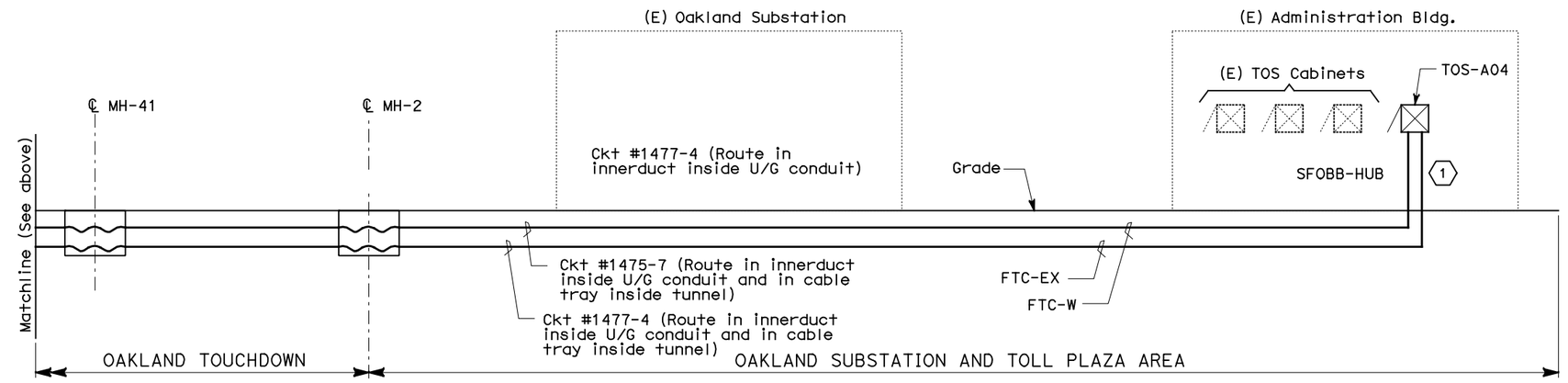

NOTES:

1. For General Notes, see sheet E-970.

SHEET NOTES:

(1) Contractor to terminate the fiber optic cable in FDU-W AND FDU-EX respectively in Cabinet TOS-A04 at SFOBB HUB.

REQUEST FOR INFORMATION NOT ADDRESSED IN THIS CCO REMAIN IN FORCE					
MARK	DATE	REVISIONS DESCRIPTIONS	BY	CH'D	CCO#
0	03/08/10	MEP INTEGRATION	SYC	ML	110

CONTRACT CHANGE ORDER NO._____
SHEET _____ OF _____

DETAILS
TRAFFIC OPERATIONS SYSTEM
TOS FIBER OPTICS RISER DIAGRAM
OAKLAND TOUCHDOWN-WB AND OAKLAND SUBSTATION

NO SCALE

E-981

FOR NOTES, ABBREVIATIONS AND LEGEND, SEE SHEETS E-8 AND E-970

THIS PLAN ACCURATE FOR ELECTRICAL WORK ONLY.

ALL DIMENSIONS ARE IN METERS UNLESS OTHERWISE SHOWN

DIST	COUNTY	ROUTE	KILOMETER POST TOTAL PROJECT	SHEET No	TOTAL SHEETS
04	SF, Ala	80	12.2/14.3 0.0/4.0	407a 09S94	1204

REGISTERED ELECTRICAL ENGINEER — 03/08/10 DATE

M.P. Lee No. 13435 Exp. 9-30-10 ELECTRICAL — REGISTERED PROFESSIONAL ENGINEER — STATE OF CALIFORNIA

05-06-2010
PLANS APPROVAL DATE

The State of California or its officers or agents shall not be responsible for the accuracy or completeness of electronic copies of this plan sheet.

Caltrans now has a web site! To get to the web site, go to http://www.dot.ca.gov

DESIGN OVERSIGHT — MICHAEL P. LEE

CALCULATED/DESIGNED BY — ML — DATE 09/09 — REVISED BY
CHECKED BY — FW — 12/09 — DATE REVISED

STATE OF CALIFORNIA - DEPARTMENT OF TRANSPORTATION — Caltrans

LAST REVISION 00-00-00 — DATE PLOTTED => 06-MAY-2010 — TIME PLOTTED => 19:14

BORDER LAST REVISED 3/1/2009

RELATIVE BORDER SCALE IS IN MILLIMETERS 0 20 40 60 80

DGN FILE => 04-0120f1_E-981.dgn
USERNAME => llorico

CU 04251

EA 0120F1

DIST	COUNTY	ROUTE	KILOMETER POST TOTAL PROJECT	SHEET No	TOTAL SHEETS
04	SF,Ala	80	12.2/14.3 0.0/4.0	407a 09S95	1204

REGISTERED ELECTRICAL ENGINEER — 03/08/10 DATE

M.P. Lee
No. 13435
Exp. 9-30-10
ELECTRICAL
REGISTERED PROFESSIONAL ENGINEER
STATE OF CALIFORNIA

05-06-2010
PLANS APPROVAL DATE

The State of California or its officers or agents shall not be responsible for the accuracy or completeness of electronic copies of this plan sheet.

Caltrans now has a web site! To get to the web site, go to http://www.dot.ca.gov

CALCULATED/ DESIGNED BY	DATE	REVISED BY
CHECKED BY	12/09	DATE REVISED
ML	FW	

DESIGN OVERSIGHT
MICHAEL P. LEE

STATE OF CALIFORNIA - DEPARTMENT OF TRANSPORTATION
Caltrans

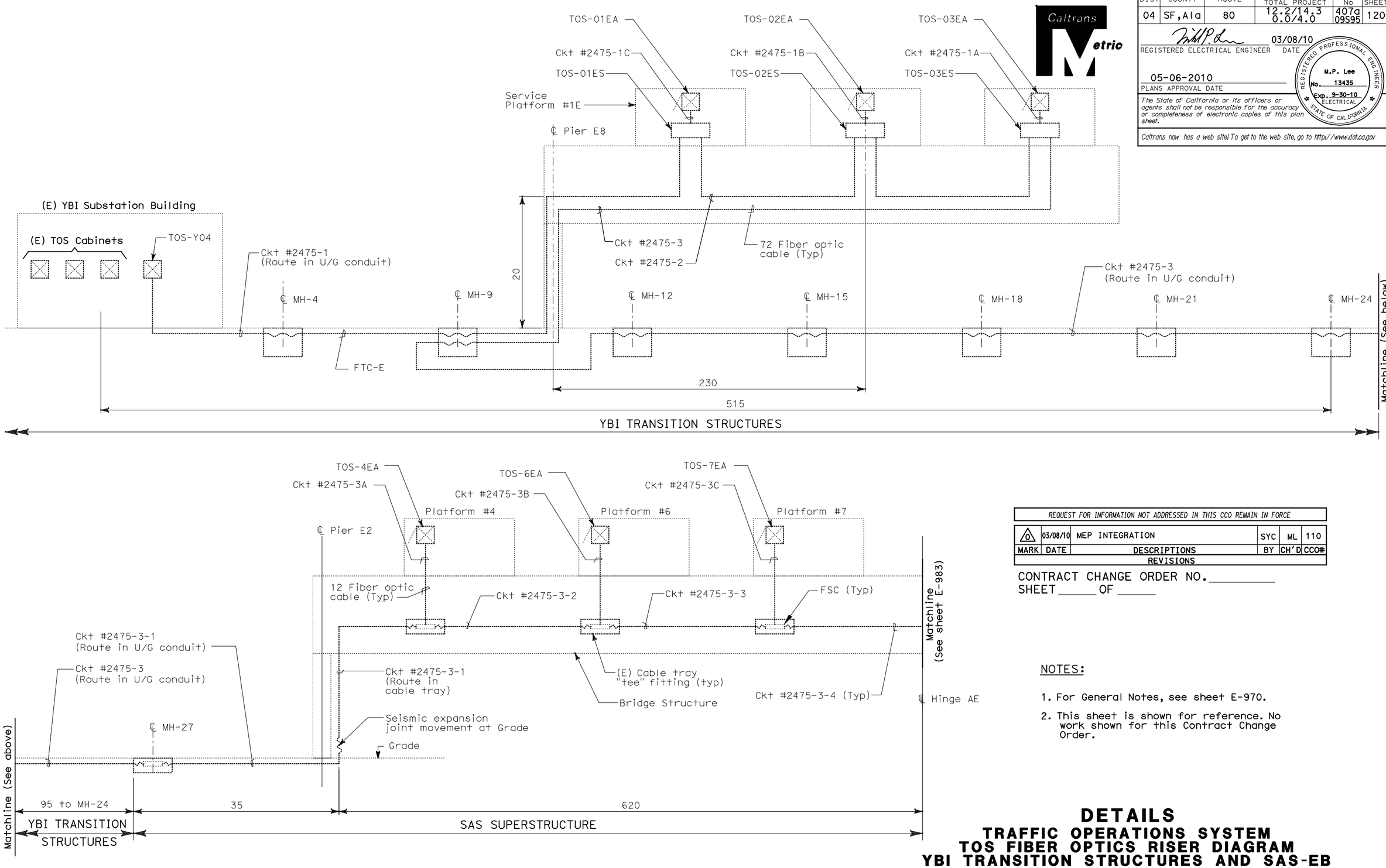

REQUEST FOR INFORMATION NOT ADDRESSED IN THIS CCO REMAIN IN FORCE					
MARK	DATE	REVISIONS DESCRIPTIONS	BY	CH'D	CCO#
0	03/08/10	MEP INTEGRATION	SYC	ML	110

CONTRACT CHANGE ORDER NO._____
SHEET _____ OF _____

NOTES:

1. For General Notes, see sheet E-970.
2. This sheet is shown for reference. No work shown for this Contract Change Order.

DETAILS
TRAFFIC OPERATIONS SYSTEM
TOS FIBER OPTICS RISER DIAGRAM
YBI TRANSITION STRUCTURES AND SAS-EB

NO SCALE

FOR NOTES, ABBREVIATIONS AND LEGEND, SEE SHEETS E-8 AND E-970

THIS PLAN ACCURATE FOR ELECTRICAL WORK ONLY.

All dimensions are in meters unless otherwise shown.

E-982

LAST REVISION DATE PLOTTED => 06-MAY-2010
00-00-00 TIME PLOTTED => 19:14

DIST	COUNTY	ROUTE	KILOMETER POST TOTAL PROJECT	SHEET No	TOTAL SHEETS
04	SF,Ala	80	12.2/14.3 0.0/4.0	407a 09S96	1204

REGISTERED ELECTRICAL ENGINEER — 03/08/10 DATE

M.P. Lee No. 13435 Exp. 9-30-10 ELECTRICAL — REGISTERED PROFESSIONAL ENGINEER — STATE OF CALIFORNIA

05-06-2010
PLANS APPROVAL DATE

The State of California or its officers or agents shall not be responsible for the accuracy or completeness of electronic copies of this plan sheet.

Caltrans now has a web site! To get to the web site, go to http://www.dot.ca.gov

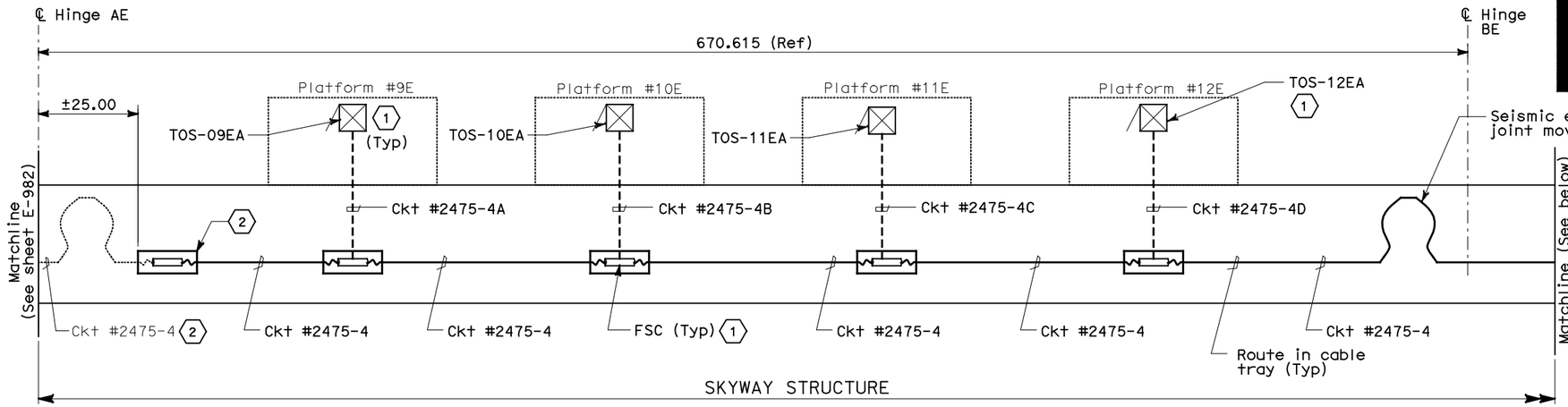

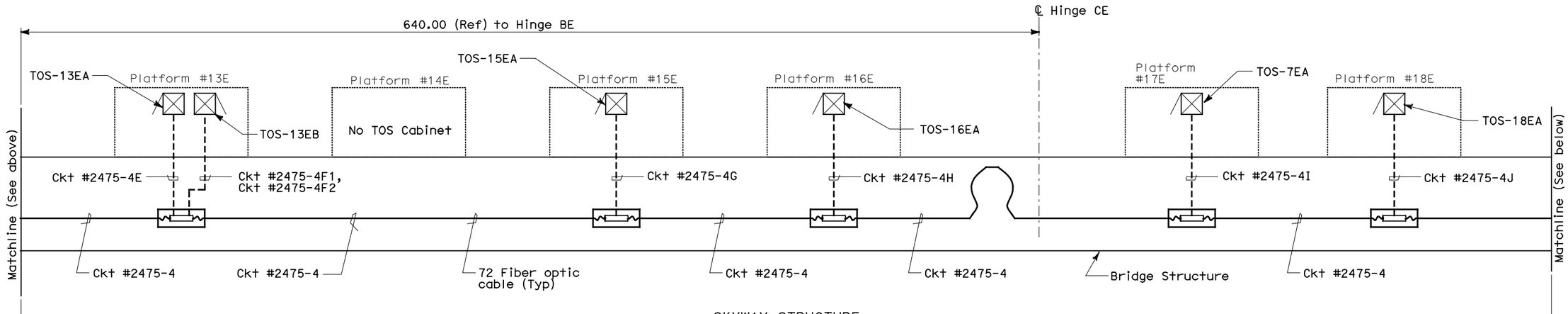

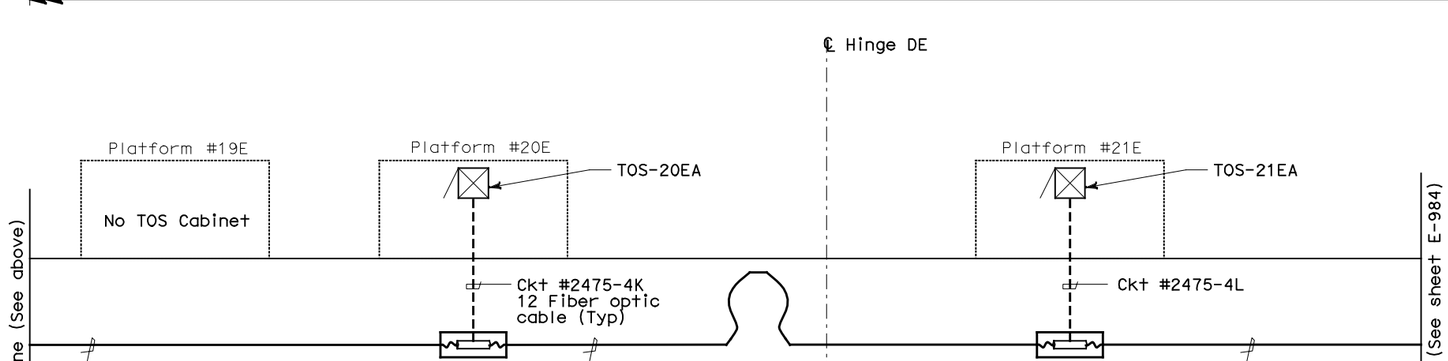

REQUEST FOR INFORMATION NOT ADDRESSED IN THIS CCO REMAIN IN FORCE

MARK	DATE	DESCRIPTIONS	BY	CH'D	CCO#
		REVISIONS			
0	03/08/10	MEP INTEGRATION	SYC	ML	110

CONTRACT CHANGE ORDER NO._____
SHEET_____OF_____

NOTES:

1. For General Notes, see sheet E-970.

SHEET NOTES:

(1) Contractor shall terminate FPC in TOS cabinet.

(2) The fiber optic splice at this location is based from the existing contract interface. However, the design intent of the fiber optic cable shall be continuous in the entire cable/circuit length. If cable needs to be spliced, use FSC and place FSC in splice cable tray.

DETAILS
TRAFFIC OPERATIONS SYSTEM
TOS FIBER OPTICS RISER DIAGRAM
SKYWAY STRUCTURES-EB

NO SCALE

CALCULATED/ DESIGNED BY	ML	DATE 09/09	REVISED BY
CHECKED BY	FW	12/09	DATE REVISED

DESIGN OVERSIGHT
MICHAEL P. LEE

STATE OF CALIFORNIA - DEPARTMENT OF TRANSPORTATION
Caltrans

FOR NOTES, ABBREVIATIONS AND LEGEND, SEE SHEETS E-8 AND E-970

THIS PLAN ACCURATE FOR ELECTRICAL WORK ONLY.

ALL DIMENSIONS ARE IN METERS UNLESS OTHERWISE SHOWN

E-983

LAST REVISION DATE PLOTTED => 06-MAY-2010
00-00-00 TIME PLOTTED => 13:14

BORDER LAST REVISED 3/1/2009

RELATIVE BORDER SCALE IS IN MILLIMETERS 0 20 40 60 80

DGN FILE => 04-0120f1_E-983.dgn
USERNAME => florico

CU 04251

EA 0120F1

DIST	COUNTY	ROUTE	KILOMETER POST TOTAL PROJECT	SHEET No	TOTAL SHEETS
04	SF, Ala	80	12.2/14.3 0.0/4.0	407a 09S97	1204

REGISTERED ELECTRICAL ENGINEER — 03/08/10 DATE

M.P. Lee
No. 13435
Exp. 9-30-10
ELECTRICAL
REGISTERED PROFESSIONAL ENGINEER
STATE OF CALIFORNIA

05-06-2010
PLANS APPROVAL DATE

The State of California or its officers or agents shall not be responsible for the accuracy or completeness of electronic copies of this plan sheet.

Caltrans now has a web site! To get to the web site, go to http://www.dot.ca.gov

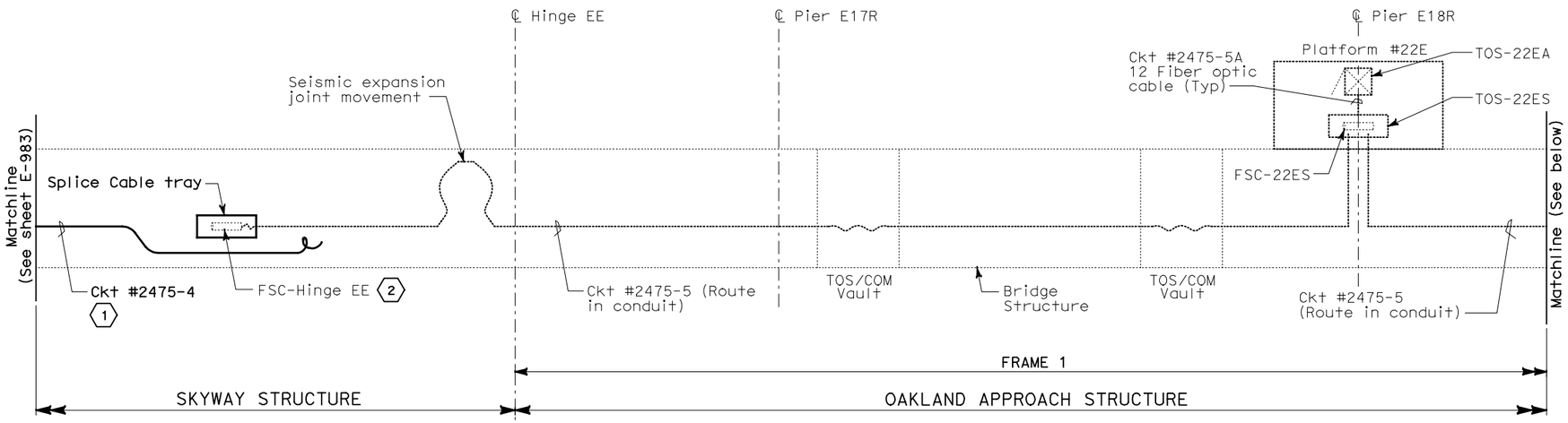

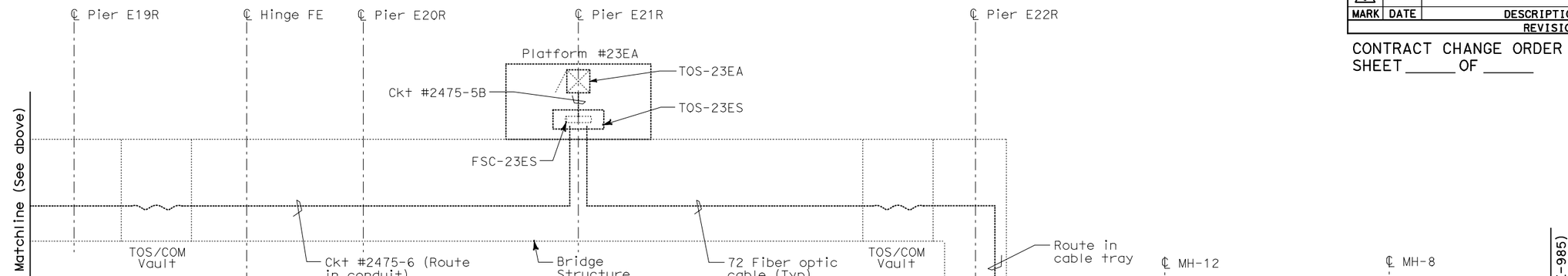

NOTES:

1. For General Notes, see sheet E-970.

SHEET NOTES:

1. Fiber optic cable in cable tray.
2. FSC by others.

REQUEST FOR INFORMATION NOT ADDRESSED IN THIS CCO REMAIN IN FORCE

MARK	DATE	DESCRIPTIONS	BY	CH'D	CCO#
		REVISIONS			
0	03/08/10	MEP INTEGRATION	SYC	ML	110

CONTRACT CHANGE ORDER NO._____
SHEET_____OF_____

DETAILS
TRAFFIC OPERATIONS SYSTEM
TOS FIBER OPTICS RISER DIAGRAM
SKYWAY AND OAKLAND TOUCHDOWN-EB

NO SCALE

FOR NOTES, ABBREVIATIONS AND LEGEND, SEE SHEETS E-8 AND E-970

THIS PLAN ACCURATE FOR ELECTRICAL WORK ONLY.

E-984

DATE	REVISED BY
09/09	DATE REVISED

CALCULATED/DESIGNED BY: ML
CHECKED BY: FW

DESIGN OVERSIGHT: MICHAEL P. LEE

STATE OF CALIFORNIA - DEPARTMENT OF TRANSPORTATION
Caltrans

LAST REVISION: DATE PLOTTED => 06-MAY-2010
00-00-00 TIME PLOTTED => 19:14

BORDER LAST REVISED 3/1/2009

RELATIVE BORDER SCALE IS IN MILLIMETERS 0 20 40 60 80

DGN FILE => 04-0120f1_E-984.dgn
USERNAME => llorico

CU 04251

EA 0120F1

DIST	COUNTY	ROUTE	KILOMETER POST TOTAL PROJECT	SHEET No	TOTAL SHEETS
04	SF,Ala	80	12.2/14.3 0.0/4.0	407a 09598	1204

REGISTERED ELECTRICAL ENGINEER — 03/08/10 DATE

M.P. Lee No. 13435 Exp. 9-30-10 ELECTRICAL — REGISTERED PROFESSIONAL ENGINEER — STATE OF CALIFORNIA

05-06-2010
PLANS APPROVAL DATE

The State of California or its officers or agents shall not be responsible for the accuracy or completeness of electronic copies of this plan sheet.

Caltrans now has a web site! To get to the web site, go to http://www.dot.ca.gov

CALCULATED/ DESIGNED BY	ML	DATE 09/09	REVISED BY
CHECKED BY	FW	12/09	DATE REVISED

DESIGN OVERSIGHT — MICHAEL P. LEE

STATE OF CALIFORNIA - DEPARTMENT OF TRANSPORTATION — Caltrans

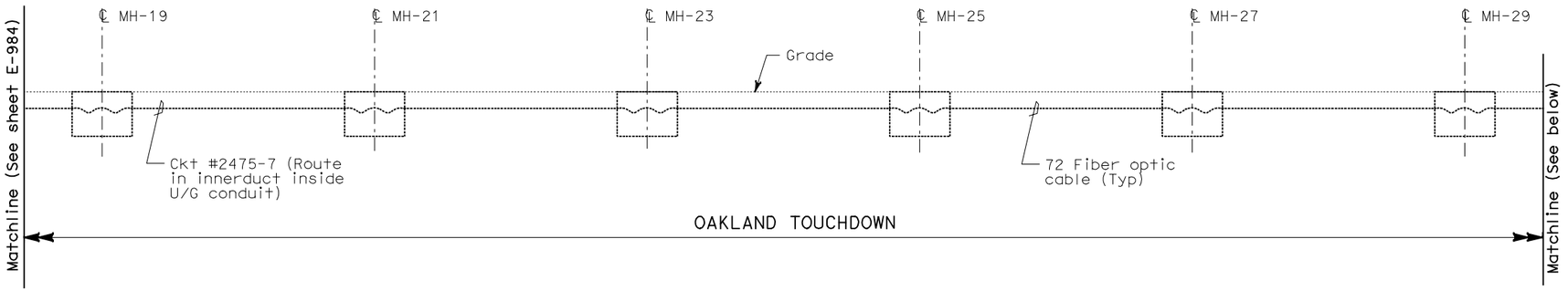

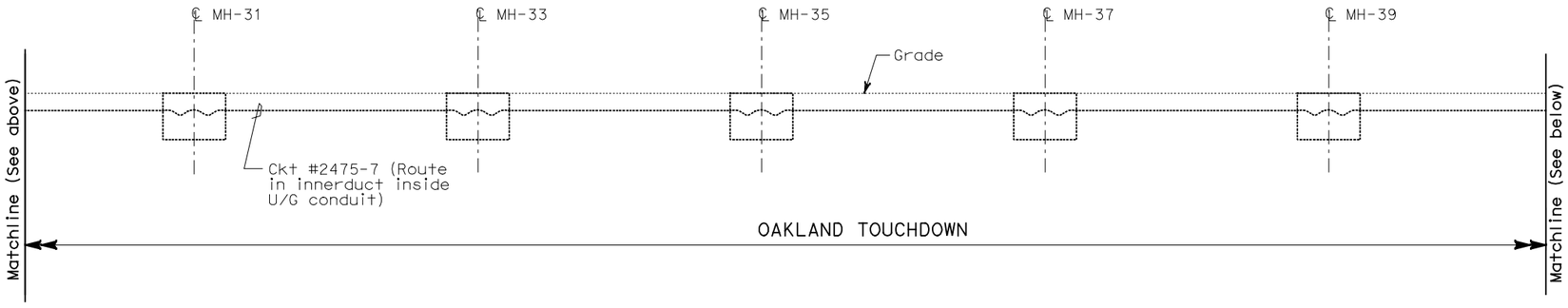

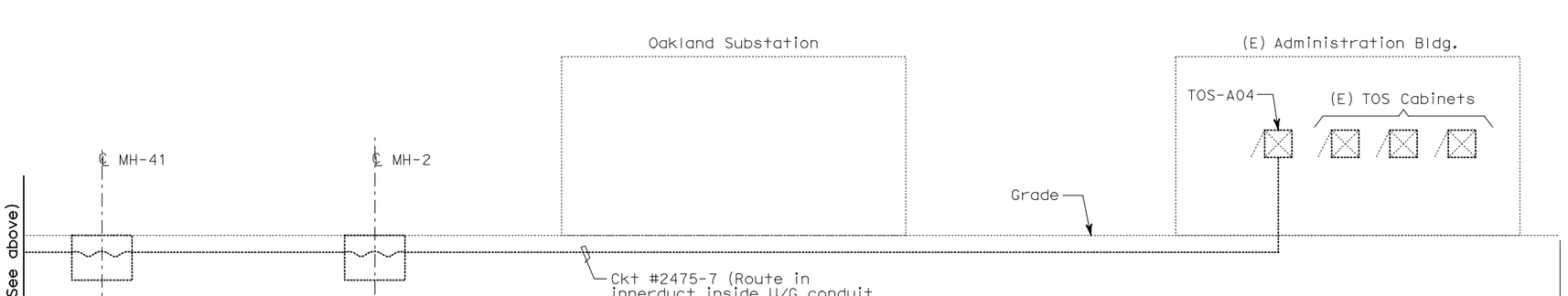

NOTES:

1. For general notes, see sheet E-970.
2. This sheet is shown for information only. No work shown for this Contract Change Order.

REQUEST FOR INFORMATION NOT ADDRESSED IN THIS CCO REMAIN IN FORCE

MARK	DATE	DESCRIPTIONS	BY	CH'D	CCO#
		REVISIONS			
0	03/08/10	MEP INTEGRATION	SYC	ML	110

CONTRACT CHANGE ORDER NO._____
SHEET _____ OF _____

DETAILS
TRAFFIC OPERATIONS SYSTEM
TOS FIBER OPTICS RISER DIAGRAM
OAKLAND TOUCHDOWN-EB AND OAKLAND SUBSTATION

NO SCALE

FOR NOTES, ABBREVIATIONS AND LEGEND, SEE SHEETS E-8 AND E-970

THIS PLAN ACCURATE FOR ELECTRICAL WORK ONLY.

E-985

LAST REVISION — DATE PLOTTED => 06-MAY-2010 — TIME PLOTTED => 19:14 — 00-00-00

BORDER LAST REVISED 3/1/2009 | RELATIVE BORDER SCALE IS IN MILLIMETERS 0 20 40 60 80 | DGN FILE => 04-0120f1_E-985.dgn USERNAME => llorico | CU 04251 | EA 0120F1

DIST	COUNTY	ROUTE	KILOMETER POST TOTAL PROJECT	SHEET No	TOTAL SHEETS
04	SF, Ala	80	12.2/14.3 0.0/4.0	407a 10S01	1204

Caltrans Metric

SynYee Chin 03/08/10
REGISTERED ELECTRICAL ENGINEER DATE

05-06-2010
PLANS APPROVAL DATE

REGISTERED PROFESSIONAL ENGINEER
SYN YEE CHIN
No. 18186
Exp. 09/30/2011
ELECTRICAL
STATE OF CALIFORNIA

PB AMERICAS, Inc.
A Parsons Brinckerhoff Company
303 Second St., Suite 700N
San Francisco, CA 94107-1317

The State of California or its officers or agents shall not be responsible for the accuracy or completeness of electronic copies of this plan sheet.

Caltrans now has a web site! To get to the web site, go to http://www.dot.ca.gov

REQUEST FOR INFORMATION NOT ADDRESSED IN THIS CCO REMAIN IN FORCE

MARK	DATE	DESCRIPTIONS	BY	CH'D	CCO#
		REVISIONS			
0	03/08/10	MEP INTEGRATION	SYC	FW	110

CONTRACT CHANGE ORDER NO._____
SHEET_____OF_____

Conduit/Tray No:	0327	Reference:	E-621, E-622
Size:	103	Type:	RGS conduit
From:	Manhole-12	To:	Manhole-8
Total Fill (mm2):	647.30	Remarks:	Installed in OTD-1 contract.
Allowable Fill (mm2):	3324.51		
Description of Changes:			

Included Cable No.	Conductor Type	Area (mm2)
1475-7	72 Fiber, single mode fiber optic riser cable inside innerduct	323.65
1477-4	72 Fiber, single mode fiber optic riser cable inside innerduct	323.65
Pull Rope	Soft-Fiber Polyester	0.00
Spare Innerduct	25.4mm Smoothwall Innerduct	0.00
Spare Innerduct	25.4mm Smoothwall Innerduct	0.00

Conduit/Tray No:	0337	Reference:	E-621
Size:	103	Type:	RGS conduit
From:	Pier E22L column	To:	Manhole-12
Total Fill (mm2):	647.30	Remarks:	Installed in OTD-1 contract.
Allowable Fill (mm2):	3324.51		
Description of Changes:			

Included Cable No.	Conductor Type	Area (mm2)
1475-7	72 Fiber, single mode fiber optic riser cable inside innerduct	323.65
1477-4	72 Fiber, single mode fiber optic riser cable inside innerduct	323.65
Pull Rope	Soft-Fiber Polyester	0.00
Spare Innerduct	25.4mm Smoothwall Innerduct	0.00
Spare Innerduct	25.4mm Smoothwall Innerduct	0.00

Conduit/Tray No:	0602	Reference:	E-623
Size:	103	Type:	RGS conduit
From:	Manhole-8	To:	Manhole-19
Total Fill (mm2):	647.30	Remarks:	Installed in OTD-1 contract.
Allowable Fill (mm2):	3324.51		
Description of Changes:			

Included Cable No.	Conductor Type	Area (mm2)
1475-7	72 Fiber, single mode fiber optic riser cable inside innerduct	323.65
1477-4	72 Fiber, single mode fiber optic riser cable inside innerduct	323.65
Pull Rope	Soft-Fiber Polyester	0.00
Spare Innerduct	25.4mm Smoothwall Innerduct	0.00
Spare Innerduct	25.4mm Smoothwall Innerduct	0.00

Conduit/Tray No:	0606	Reference:	E-623, E-624
Size:	103	Type:	RGS conduit
From:	Manhole-19	To:	Manhole-21
Total Fill (mm2):	647.30	Remarks:	Installed in OTD-1 contract.
Allowable Fill (mm2):	3324.51		
Description of Changes:			

Included Cable No.	Conductor Type	Area (mm2)
1475-7	72 Fiber, single mode fiber optic riser cable inside innerduct	323.65
1477-4	72 Fiber, single mode fiber optic riser cable inside innerduct	323.65
Pull Rope	Soft-Fiber Polyester	0.00
Spare Innerduct	25.4mm Smoothwall Innerduct	0.00
Spare Innerduct	25.4mm Smoothwall Innerduct	0.00

Conduit/Tray No:	0610	Reference:	E-624, E-625
Size:	103	Type:	RGS conduit
From:	Manhole-21	To:	Manhole-23
Total Fill (mm2):	647.30	Remarks:	Installed in OTD-1 contract.
Allowable Fill (mm2):	3324.51		
Description of Changes:			

Included Cable No.	Conductor Type	Area (mm2)
1475-7	72 Fiber, single mode fiber optic riser cable inside innerduct	323.65
1477-4	72 Fiber, single mode fiber optic riser cable inside innerduct	323.65
Pull Rope	Soft-Fiber Polyester	0.00
Spare Innerduct	25.4mm Smoothwall Innerduct	0.00
Spare Innerduct	25.4mm Smoothwall Innerduct	0.00

EXISTING
CONDUIT AND TRAY SCHEDULE

E-1000

DESIGN OVERSIGHT	CALCULATED/ DESIGNED BY	CHECKED BY	DRAWN BY	CHECKED BY	REVISED BY	DATE REVISED
BEHZAD GOLEMOHAMMADI	SYC	FW	0/10	0/10		

STATE OF CALIFORNIA - DEPARTMENT OF TRANSPORTATION
Caltrans

THIS PLAN ACCURATE FOR ELECTRICAL WORK ONLY.

FOR REDUCED PLANS ORIGINAL SCALE IS IN MILLIMETERS 0 20 40 60 80

DGN FILE =>04-0120f1_E-1000.dgn
USERNAME =>llorico

CU 04251

EA 0120F1

DATE PLOTTED => 25-MAY-2010
TIME PLOTTED => 13:42

LAST REVISION 00-00-00

DIST	COUNTY	ROUTE	KILOMETER POST TOTAL PROJECT	SHEET No	TOTAL SHEETS
04	SF, Ala	80	12.2/14.3 0.0/4.0	407a 10S02	1204

Caltrans Metric

Syn Yee Chin 03/08/10
REGISTERED ELECTRICAL ENGINEER DATE

05-06-2010
PLANS APPROVAL DATE

REGISTERED PROFESSIONAL ENGINEER
SYN YEE CHIN
No. 18186
Exp. 09/30/2011
ELECTRICAL
STATE OF CALIFORNIA

PB AMERICAS, Inc.
A Parsons Brinckerhoff Company
303 Second St., Suite 700N
San Francisco, CA 94107-1317

The State of California or its officers or agents shall not be responsible for the accuracy or completeness of electronic copies of this plan sheet.

Caltrans now has a web site! To get to the web site, go to http://www.dot.ca.gov

REQUEST FOR INFORMATION NOT ADDRESSED IN THIS CCO REMAIN IN FORCE

MARK	DATE	DESCRIPTIONS	BY	CH'D	CCO#
		REVISIONS			
0	03/08/10	MEP INTEGRATION	SYC	FW	110

CONTRACT CHANGE ORDER NO._____
SHEET _____ OF _____

Conduit/Tray No:	0614	Reference:	E-625, E-626
Size:	103	Type:	RGS conduit
From:	Manhole-23	To:	Manhole-25
Total Fill (mm2):	647.30	Remarks:	Installed in OTD-1 contract.
Allowable Fill (mm2):	3324.51		
Description of Changes:			

Included Cable No.	Conductor Type	Area (mm2)
1475-7	72 Fiber, single mode fiber optic riser cable inside innerduct	323.65
1477-4	72 Fiber, single mode fiber optic riser cable inside innerduct	323.65
Pull Rope	Soft-Fiber Polyester	0.00
Spare Innerduct	25.4mm Smoothwall Innerduct	0.00
Spare Innerduct	25.4mm Smoothwall Innerduct	0.00

Conduit/Tray No:	0618	Reference:	E-626, E-627
Size:	103	Type:	RGS conduit
From:	Manhole-25	To:	Manhole-27
Total Fill (mm2):	647.30	Remarks:	Installed in OTD-1 contract.
Allowable Fill (mm2):	3324.51		
Description of Changes:			

Included Cable No.	Conductor Type	Area (mm2)
1475-7	72 Fiber, single mode fiber optic riser cable inside innerduct	323.65
1477-4	72 Fiber, single mode fiber optic riser cable inside innerduct	323.65
Pull Rope	Soft-Fiber Polyester	0.00
Spare Innerduct	25.4mm Smoothwall Innerduct	0.00
Spare Innerduct	25.4mm Smoothwall Innerduct	0.00

Conduit/Tray No:	0622	Reference:	E-627, E-628
Size:	103	Type:	RGS conduit
From:	Manhole-27	To:	Manhole-29
Total Fill (mm2):	647.30	Remarks:	Installed in OTD-1 contract.
Allowable Fill (mm2):	3324.51		
Description of Changes:			

Included Cable No.	Conductor Type	Area (mm2)
1475-7	72 Fiber, single mode fiber optic riser cable inside innerduct	323.65
1477-4	72 Fiber, single mode fiber optic riser cable inside innerduct	323.65
Pull Rope	Soft-Fiber Polyester	0.00
Spare Innerduct	25.4mm Smoothwall Innerduct	0.00
Spare Innerduct	25.4mm Smoothwall Innerduct	0.00

Conduit/Tray No:	0626	Reference:	E-628, E-629
Size:	103	Type:	RGS conduit
From:	Manhole-29	To:	Manhole-31
Total Fill (mm2):	647.30	Remarks:	Installed in OTD-1 contract.
Allowable Fill (mm2):	3324.51		
Description of Changes:			

Included Cable No.	Conductor Type	Area (mm2)
1475-7	72 Fiber, single mode fiber optic riser cable inside innerduct	323.65
1477-4	72 Fiber, single mode fiber optic riser cable inside innerduct	323.65
Pull Rope	Soft-Fiber Polyester	0.00
Spare Innerduct	25.4mm Smoothwall Innerduct	0.00
Spare Innerduct	25.4mm Smoothwall Innerduct	0.00

Conduit/Tray No:	0630	Reference:	E-629, E-630
Size:	103	Type:	RGS conduit
From:	Manhole-31	To:	Manhole-33
Total Fill (mm2):	647.30	Remarks:	Installed in OTD-1 contract.
Allowable Fill (mm2):	3324.51		
Description of Changes:			

Included Cable No.	Conductor Type	Area (mm2)
1475-7	72 Fiber, single mode fiber optic riser cable inside innerduct	323.65
1477-4	72 Fiber, single mode fiber optic riser cable inside innerduct	323.65
Pull Rope	Soft-Fiber Polyester	0.00
Spare Innerduct	25.4mm Smoothwall Innerduct	0.00
Spare Innerduct	25.4mm Smoothwall Innerduct	0.00

EXISTING
CONDUIT AND TRAY SCHEDULE

E-1001

DESIGN OVERSIGHT	CALCULATED/ DESIGNED BY	CHECKED BY	DRAWN BY	REVISED BY	DATE REVISED
BEHZAD GOLEMOHAMMADI	SYC	FW	01/10		

STATE OF CALIFORNIA - DEPARTMENT OF TRANSPORTATION
Caltrans

THIS PLAN ACCURATE FOR ELECTRICAL WORK ONLY.

FOR REDUCED PLANS ORIGINAL SCALE IS IN MILLIMETERS 0 20 40 60 80

DGN FILE =>04-0120f1_E-1001.dgn
USERNAME =>llorico

CU 04251

EA 0120F1

DATE PLOTTED => 25-MAY-2010
TIME PLOTTED => 13:42

LAST REVISION 00-00-00

DIST	COUNTY	ROUTE	KILOMETER POST TOTAL PROJECT	SHEET No	TOTAL SHEETS
04	SF, Ala	80	12.2/14.3 0.0/4.0	407a 10S03	1204

Caltrans Metric

Syn Yee Chin 03/08/10
REGISTERED ELECTRICAL ENGINEER DATE

05-06-2010
PLANS APPROVAL DATE

REGISTERED PROFESSIONAL ENGINEER
SYN YEE CHIN
No. 18186
Exp. 09/30/2011
ELECTRICAL
STATE OF CALIFORNIA

PB AMERICAS, Inc.
A Parsons Brinckerhoff Company
303 Second St., Suite 700N
San Francisco, CA 94107-1317

The State of California or its officers or agents shall not be responsible for the accuracy or completeness of electronic copies of this plan sheet.

Caltrans now has a web site! To get to the web site, go to http://www.dot.ca.gov

REQUEST FOR INFORMATION NOT ADDRESSED IN THIS CCO REMAIN IN FORCE

MARK	DATE	DESCRIPTIONS	BY	CH'D	CCO#
		REVISIONS			
0	03/08/10	MEP INTEGRATION	SYC	FW	110

CONTRACT CHANGE ORDER NO._____
SHEET _____ OF _____

Conduit/Tray No: 0634 | Reference: E-630, E-631
Size: 103 | Type: RGS conduit
From: Manhole-33 | To: Manhole-35
Total Fill (mm2): 647.30 | Remarks: Installed in OTD-1 contract.
Allowable Fill (mm2): 3324.51
Description of Changes:

Included Cable No.	Conductor Type	Area (mm2)
1475-7	72 Fiber, single mode fiber optic riser cable inside innerduct	323.65
1477-4	72 Fiber, single mode fiber optic riser cable inside innerduct	323.65
Pull Rope	Soft-Fiber Polyester	0.00
Spare Innerduct	25.4mm Smoothwall Innerduct	0.00
Spare Innerduct	25.4mm Smoothwall Innerduct	0.00

Conduit/Tray No: 0638 | Reference: E-631, E-632
Size: 103 | Type: RGS conduit
From: Manhole-35 | To: Manhole-37
Total Fill (mm2): 647.30 | Remarks: Installed in OTD-1 contract.
Allowable Fill (mm2): 3324.51
Description of Changes:

Included Cable No.	Conductor Type	Area (mm2)
1475-7	72 Fiber, single mode fiber optic riser cable inside innerduct	323.65
1477-4	72 Fiber, single mode fiber optic riser cable inside innerduct	323.65
Pull Rope	Soft-Fiber Polyester	0.00
Spare Innerduct	25.4mm Smoothwall Innerduct	0.00
Spare Innerduct	25.4mm Smoothwall Innerduct	0.00

Conduit/Tray No: 0642 | Reference: E-632
Size: 103 | Type: RGS conduit
From: Manhole-37 | To: Manhole-39
Total Fill (mm2): 647.30 | Remarks: Installed in OTD-1 contract.
Allowable Fill (mm2): 3324.51
Description of Changes:

Included Cable No.	Conductor Type	Area (mm2)
1475-7	72 Fiber, single mode fiber optic riser cable inside innerduct	323.65
1477-4	72 Fiber, single mode fiber optic riser cable inside innerduct	323.65
Pull Rope	Soft-Fiber Polyester	0.00
Spare Innerduct	25.4mm Smoothwall Innerduct	0.00
Spare Innerduct	25.4mm Smoothwall Innerduct	0.00

Conduit/Tray No: 0646 | Reference: E-633
Size: 103 | Type: RGS conduit
From: Manhole-39 | To: Manhole-41
Total Fill (mm2): 647.30 | Remarks: Installed in OTD-1 contract.
Allowable Fill (mm2): 3324.51
Description of Changes:

Included Cable No.	Conductor Type	Area (mm2)
1475-7	72 Fiber, single mode fiber optic riser cable inside innerduct	323.65
1477-4	72 Fiber, single mode fiber optic riser cable inside innerduct	323.65
Pull Rope	Soft-Fiber Polyester	0.00
Spare Innerduct	25.4mm Smoothwall Innerduct	0.00
Spare Innerduct	25.4mm Smoothwall Innerduct	0.00

Conduit/Tray No: 0650 | Reference: E-633
Size: 103 | Type: RGS conduit
From: Manhole-41 | To: Manhole-2
Total Fill (mm2): 647.30 | Remarks: Installed in OTD-1 contract.
Allowable Fill (mm2): 3324.51
Description of Changes:

Included Cable No.	Conductor Type	Area (mm2)
1475-7	72 Fiber, single mode fiber optic riser cable inside innerduct	323.65
1477-4	72 Fiber, single mode fiber optic riser cable inside innerduct	323.65
Pull Rope	Soft-Fiber Polyester	0.00
Spare Innerduct	25.4mm Smoothwall Innerduct	0.00
Spare Innerduct	25.4mm Smoothwall Innerduct	0.00

EXISTING
CONDUIT AND TRAY SCHEDULE

E-1002

THIS PLAN ACCURATE FOR ELECTRICAL WORK ONLY.

FOR REDUCED PLANS ORIGINAL SCALE IS IN MILLIMETERS 0 20 40 60 80

DGN FILE =>04-0120f1_E-1002.dgn
USERNAME =>llorico

CU 04251 | EA 0120F1

DESIGN OVERSIGHT: BEHZAD GOLEMOHAMMADI
CALCULATED/DESIGNED BY:
CHECKED BY: FW
DATE: 01/10
REVISED BY: DATE REVISED

STATE OF CALIFORNIA - DEPARTMENT OF TRANSPORTATION
Caltrans

DATE PLOTTED => 25-MAY-2010
TIME PLOTTED => 13:42
LAST REVISION 00-00-00

DIST	COUNTY	ROUTE	KILOMETER POST TOTAL PROJECT	SHEET No	TOTAL SHEETS
04	SF,Ala	80	12.2/14.3 0.0/4.0	407a 10S04	1204

Caltrans Metric

SynYee Chin 03/08/10
REGISTERED ELECTRICAL ENGINEER DATE

REGISTERED PROFESSIONAL ENGINEER
SYN YEE CHIN
No. 18186
Exp. 09/30/2011
ELECTRICAL
STATE OF CALIFORNIA

05-06-2010
PLANS APPROVAL DATE

PB AMERICAS, Inc.
A Parsons Brinckerhoff Company
303 Second St., Suite 700N
San Francisco, CA 94107-1317

The State of California or its officers or agents shall not be responsible for the accuracy or completeness of electronic copies of this plan sheet.

Caltrans now has a web site! To get to the web site, go to http://www.dot.ca.gov

REQUEST FOR INFORMATION NOT ADDRESSED IN THIS CCO REMAIN IN FORCE

MARK	DATE	DESCRIPTIONS	SYC BY	FW CH'D	110 CCO#
		REVISIONS			
0	03/08/10	MEP INTEGRATION	SYC	FW	110

CONTRACT CHANGE ORDER NO._____
SHEET _____ OF _____

Conduit/Tray No: 1T1 Reference: E-635
Size: 305 Type: 102 mm siderail ladder tray
From: Utility Tunnel To: Utility Tunnel
Total Fill (mm2): 647.30 Remarks:
Allowable Fill (mm2): 8387.08
Description of Changes:

Included Cable No.	Conductor Type	Area (mm2)
1475-7	72 Fiber, single mode fiber optic riser cable	323.65
1477-4	72 Fiber, single mode fiber optic riser cable	323.65

Conduit/Tray No: 1T10 Reference: E-600 to E-605, E-637, E-642
Size: 305 Type: 152 mm siderail ladder tray
From: Contract Interface @ Hinge AW To: Hinge BW
Total Fill (mm2): 3115.90 Remarks: Installed in Skyway contract. System Ground cable is existing.
Allowable Fill (mm2): 8387.08
Description of Changes:

Included Cable No.	Conductor Type	Area (mm2)
1391	3-1/C #4/0, 15 KV, EPR insulation	2780.99
System Ground	500 kcmil, bare copper wire, stranded	334.91

Conduit/Tray No: 1T11 Reference: E-605, to E-610, E-642, E-648
Size: 305 Type: 152 mm siderail ladder tray
From: Hinge BW To: Hinge CW
Total Fill (mm2): 5896.89 Remarks: Installed in Skyway contract. System Ground cable is existing.
Allowable Fill (mm2): 8387.08
Description of Changes:

Included Cable No.	Conductor Type	Area (mm2)
1391	3-1/C #4/0, 15 KV, EPR insulation	2780.99
1392	3-1/C #4/0, 15 KV, EPR insulation	2780.99
System Ground	500 kcmil, bare copper wire, stranded	334.91

Conduit/Tray No: 1T12 Reference: E-610, E-611, E-612, E-613, E-614, E-648, E-653
Size: 305 Type: 152 mm siderail ladder tray
From: Hinge CW To: Hinge DW
Total Fill (mm2): 3115.90 Remarks: Installed in Skyway contract. System Ground cable is existing.
Allowable Fill (mm2): 8387.08
Description of Changes:

Included Cable No.	Conductor Type	Area (mm2)
1392	3-1/C #4/0, 15 KV, EPR insulation	2780.99
System Ground	500 kcmil, bare copper wire, stranded	334.91

Conduit/Tray No: 1T13 Reference: E-615, E-616, E-653, E-655
Size: 305 Type: 152 mm siderail ladder tray
From: Hinge DW To: Hinge EW Girder Interface
Total Fill (mm2): 3115.90 Remarks: Installed in Skyway contract. System ground cable is existing.
Allowable Fill (mm2): 8387.08
Description of Changes:

Included Cable No.	Conductor Type	Area (mm2)
1392	3-1/C #4/0, 15 KV, EPR insulation	2780.99
System Ground	500 kcmil, bare copper wire, stranded	334.91

Conduit/Tray No: 1T25 Reference: E-620
Size: 610 Type: 152 mm siderail ladder tray
From: Pier E22L column To: Pier E22L column
Total Fill (mm2): 647.30 Remarks: Installed in OTD-1 contract.
Allowable Fill (mm2): 16774.16
Description of Changes:

Included Cable No.	Conductor Type	Area (mm2)
1475-7	72 Fiber, single mode fiber optic riser cable	323.65
1477-4	72 Fiber, single mode fiber optic riser cable	323.65

EXISTING
CONDUIT AND TRAY SCHEDULE

E-1003

THIS PLAN ACCURATE FOR ELECTRICAL WORK ONLY.

DESIGN OVERSIGHT	CALCULATED/ DESIGNED BY	CHECKED BY	DATE 01/10	SYC	FW	REVISED BY	DATE REVISED
BEHZAD GOLEMOHAMMADI							

STATE OF CALIFORNIA - DEPARTMENT OF TRANSPORTATION
Caltrans

FOR REDUCED PLANS ORIGINAL SCALE IS IN MILLIMETERS 0 20 40 60 80

DGN FILE =>04-0120f1_E-1003.dgn
USERNAME =>llorico

CU 04251 EA 0120F1

LAST REVISION 00-00-00
DATE PLOTTED => 25-MAY-2010
TIME PLOTTED => 13:42

DIST	COUNTY	ROUTE	KILOMETER POST TOTAL PROJECT	SHEET No	TOTAL SHEETS
04	SF, Ala	80	12.2/14.3 0.0/4.0	407a 10S05	1204

SynYee Chin 03/08/10
REGISTERED ELECTRICAL ENGINEER DATE

05-06-2010
PLANS APPROVAL DATE

REGISTERED PROFESSIONAL ENGINEER
SYN YEE CHIN
No. 18186
Exp. 09/30/2011
ELECTRICAL
STATE OF CALIFORNIA

PB AMERICAS, Inc.
A Parsons Brinckerhoff Company
303 Second St., Suite 700N
San Francisco, CA 94107-1317

The State of California or its officers or agents shall not be responsible for the accuracy or completeness of electronic copies of this plan sheet.

Caltrans now has a web site! To get to the web site, go to http://www.dot.ca.gov

REQUEST FOR INFORMATION NOT ADDRESSED IN THIS CCO REMAIN IN FORCE

MARK	DATE	DESCRIPTIONS	SYC BY	FW CH'D	110 CCO#
		REVISIONS			
0	03/08/10	MEP INTEGRATION	SYC	FW	110

CONTRACT CHANGE ORDER NO._____
SHEET _____ OF _____

Conduit/Tray No: 1T40 Reference: E-600, E-601, E-602, E-603, E-604, E-605
Size: 305 Type: 152 mm siderail solid bottom tray
From: Contract Interface @ Hinge AW To: Hinge BW
Total Fill (mm2): 5605.09 Remarks: Installed in Skyway contract. All cables are existing except 72 and 12 Fiber.
Allowable Fill (mm2): 19354.80
Description of Changes:

Included Cable No.	Conductor Type	Area (mm2)
1473-11	50 pair #18, shielded pairs, IS/OS shield 600 V, XLPE insul., PVC jacket	1201.71
1473-12	50 pair #18, shielded pairs, IS/OS shield 600 V, XLPE insul., PVC jacket	1201.71
1473-13	50 pair #18, shielded pairs, IS/OS shield 600 V, XLPE insul., PVC jacket	1201.71
1473-14	50 pair #18, shielded pairs, IS/OS shield 600 V, XLPE insul., PVC jacket	1201.71
1475-4	72 Fiber, single mode fiber optic riser cable	323.65
1475-4A	12 Fiber, single mode fiber optic cable	30.19
1475-4B	12 Fiber, single mode fiber optic cable	30.19
1475-4C1	12 Fiber, single mode fiber optic cable	30.19
1475-4C2	12 Fiber, single mode fiber optic cable	30.19
1475-4D	12 Fiber, single mode fiber optic cable	30.19
1477-3	72 Fiber, single mode fiber optic riser cable	323.65

Conduit/Tray No: 1T41 Reference: E-605, E-606, E-607, E-608, E-609, E-610
Size: 305 Type: 152 mm siderail solid bottom tray
From: Hinge BW To: Hinge CW
Total Fill (mm2): 7948.13 Remarks: Installed in Skyway contract. All cables are existing except 72 and 12 Fiber.
Allowable Fill (mm2): 19354.80
Description of Changes:

Included Cable No.	Conductor Type	Area (mm2)
1473-14	50 pair #18, shielded pairs, IS/OS shield 600 V, XLPE insul., PVC jacket	1201.71
1473-15	50 pair #18, shielded pairs, IS/OS shield 600 V, XLPE insul., PVC jacket	1201.71
1473-16	50 pair #18, shielded pairs, IS/OS shield 600 V, XLPE insul., PVC jacket	1201.71
1473-17	50 pair #18, shielded pairs, IS/OS shield 600 V, XLPE insul., PVC jacket	1201.71
1473-18	50 pair #18, shielded pairs, IS/OS shield 600 V, XLPE insul., PVC jacket	1201.71
1473-23	50 pair #18, shielded pairs, IS/OS shield 600 V, XLPE insul., PVC jacket	1201.71
1475-4	72 Fiber, single mode fiber optic riser cable	323.65
1475-4E	12 Fiber, single mode fiber optic cable	30.19
1475-4F	12 Fiber, single mode fiber optic cable	30.19
1475-4G	12 Fiber, single mode fiber optic cable	30.19
1477-3	72 Fiber, single mode fiber optic riser cable	323.65

Conduit/Tray No: 1T42 Reference: E-610, E-611, E-612, E-613, E-614
Size: 305 Type: 152 mm siderail solid bottom tray
From: Hinge CW To: Hinge DW
Total Fill (mm2): 6776.61 Remarks: Installed in Skyway contract. All cables are existing except 72 and 12 Fiber.
Allowable Fill (mm2): 19354.80
Description of Changes:

Included Cable No.	Conductor Type	Area (mm2)
1473-18	50 pair #18, shielded pairs, IS/OS shield 600 V, XLPE insul., PVC jacket	1201.71
1473-19	50 pair #18, shielded pairs, IS/OS shield 600 V, XLPE insul., PVC jacket	1201.71
1473-20	50 pair #18, shielded pairs, IS/OS shield 600 V, XLPE insul., PVC jacket	1201.71
1473-21	50 pair #18, shielded pairs, IS/OS shield 600 V, XLPE insul., PVC jacket	1201.71
1473-22	50 pair #18, shielded pairs, IS/OS shield 600 V, XLPE insul., PVC jacket	1201.71
1475-4	72 Fiber, single mode fiber optic riser cable	323.65
1475-4H	12 Fiber, single mode fiber optic cable	30.19
1475-4I1	12 Fiber, single mode fiber optic cable	30.19
1475-4I2	12 Fiber, single mode fiber optic cable	30.19
1475-4J	12 Fiber, single mode fiber optic cable	30.19
1477-3	72 Fiber, single mode fiber optic riser cable	323.65

EXISTING
CONDUIT AND TRAY SCHEDULE

E-1004

THIS PLAN ACCURATE FOR ELECTRICAL WORK ONLY.

DATE	REVISED BY	DATE REVISED
0/10	FW	0/10

CALCULATED/DESIGNED BY
CHECKED BY
DESIGN OVERSIGHT
BEHZAD GOLEMOHAMMADI

STATE OF CALIFORNIA - DEPARTMENT OF TRANSPORTATION
Caltrans

FOR REDUCED PLANS ORIGINAL SCALE IS IN MILLIMETERS 0 20 40 60 80

DGN FILE =>04-0120f1_E-1004.dgn
USERNAME =>llorico

CU 04251

EA 0120F1

LAST REVISION 00-00-00
DATE PLOTTED => 25-MAY-2010
TIME PLOTTED => 13:43

DIST	COUNTY	ROUTE	KILOMETER POST TOTAL PROJECT	SHEET No	TOTAL SHEETS
04	SF, Ala	80	12.2/14.3 0.0/4.0	407a 10S06	1204

Syn Yee Chin 03/08/10
REGISTERED ELECTRICAL ENGINEER DATE

05-06-2010
PLANS APPROVAL DATE

REGISTERED PROFESSIONAL ENGINEER
SYN YEE CHIN
No. 18186
Exp. 09/30/2011
ELECTRICAL
STATE OF CALIFORNIA

PB AMERICAS, Inc.
A Parsons Brinckerhoff Company
303 Second St., Suite 700N
San Francisco, CA 94107-1317

The State of California or its officers or agents shall not be responsible for the accuracy or completeness of electronic copies of this plan sheet.

Caltrans now has a web site! To get to the web site, go to http://www.dot.ca.gov

REQUEST FOR INFORMATION NOT ADDRESSED IN THIS CCO REMAIN IN FORCE

MARK	DATE	REVISIONS DESCRIPTIONS	BY	CH'D	CCO#
0	03/08/10	MEP INTEGRATION	SYC	FW	110

CONTRACT CHANGE ORDER NO._____
SHEET _____ OF _____

Conduit/Tray No: 1T43 | Reference: E-615, E-616
Size: 305 | Type: 152 mm siderail solid bottom tray
From: Hinge DW | To: Hinge EW Girder Interface
Total Fill (mm2): 2526.50 | Remarks: Installed in Skyway contract. All cables are existing except 72 and 12 Fiber.
Allowable Fill (mm2): 19354.80
Description of Changes:

Included Cable No.	Conductor Type	Area (mm2)
1473-22	50 pair #18, shielded pairs, IS/OS shield 600 V, XLPE insul., PVC jacket	1201.71
1475-4	72 Fiber, single mode fiber optic riser cable	323.65
1475-4K	12 Fiber, single mode fiber optic cable	30.19
1475-5	72 Fiber, single mode fiber optic riser cable	323.65
1477-3	72 Fiber, single mode fiber optic riser cable	323.65
1477-4	72 Fiber, single mode fiber optic riser cable	323.65

Conduit/Tray No: 2516 | Reference: E-823A
Size: 103 | Type: Liquidtight flex metal conduit
From: 2T40 | To: 2521
Total Fill (mm2): 323.65 | Remarks: Installed in Skyway contract.
Allowable Fill (mm2): 3275.44
Description of Changes:

Included Cable No.	Conductor Type	Area (mm2)
2475-4	72 Fiber, single mode fiber optic riser cable inside innerduct	323.65
Pull Rope	Soft-Fiber Polyester	0.00
Spare Innerduct	25.4mm Smoothwall Innerduct	0.00
Spare Innerduct	25.4mm Smoothwall Innerduct	0.00
Spare Innerduct	25.4mm Smoothwall Innerduct	0.00

Conduit/Tray No: 2521 | Reference: E-823A
Size: 103 | Type: RGS conduit
From: 2516 | To: 2525
Total Fill (mm2): 323.65 | Remarks: Installed in Skyway contract.
Allowable Fill (mm2): 3324.51
Description of Changes:

Included Cable No.	Conductor Type	Area (mm2)
2475-4	72 Fiber, single mode fiber optic riser cable inside innerduct	323.65
Pull Rope	Soft-Fiber Polyester	0.00
Spare Innerduct	25.4mm Smoothwall Innerduct	0.00
Spare Innerduct	25.4mm Smoothwall Innerduct	0.00
Spare Innerduct	25.4mm Smoothwall Innerduct	0.00

Conduit/Tray No: 2525 | Reference: E-823A
Size: 103 | Type: Liquidtight flex metal conduit
From: 2521 | To: 2T41 (on Skyway)
Total Fill (mm2): 323.65 | Remarks: Installed in Skyway contract.
Allowable Fill (mm2): 3275.44
Description of Changes:

Included Cable No.	Conductor Type	Area (mm2)
2475-4	72 Fiber, single mode fiber optic riser cable inside innerduct	323.65
Pull Rope	Soft-Fiber Polyester	0.00
Spare Innerduct	25.4mm Smoothwall Innerduct	0.00
Spare Innerduct	25.4mm Smoothwall Innerduct	0.00
Spare Innerduct	25.4mm Smoothwall Innerduct	0.00

Conduit/Tray No: 2544 | Reference: E-823A
Size: 103 | Type: Liquidtight flex metal conduit
From: 2T10 | To: 2545
Total Fill (mm2): 3115.90 | Remarks: Installed in Skyway contract. System Ground cable is existing.
Allowable Fill (mm2): 3275.44
Description of Changes:

Included Cable No.	Conductor Type	Area (mm2)
2391	3-1/C #4/0, 15 KV, EPR insulation	2780.99
System Ground	500 kcmil, bare copper wire, stranded	334.91
Pull Rope	Soft-Fiber Polyester	0.00

EXISTING
CONDUIT AND TRAY SCHEDULE

E-1005

THIS PLAN ACCURATE FOR ELECTRICAL WORK ONLY.

FOR REDUCED PLANS ORIGINAL SCALE IS IN MILLIMETERS 0 20 40 60 80

DGN FILE =>04-0120f1_E-1005.dgn
USERNAME =>llorico

CU 04251 | EA 0120F1

DESIGN OVERSIGHT BEHZAD GOLEMOHAMMADI
CALCULATED/DESIGNED BY CHECKED BY
DATE 0/10 SYC 0/10 FW
REVISED BY DATE REVISED
STATE OF CALIFORNIA - DEPARTMENT OF TRANSPORTATION
Caltrans

LAST REVISION 00-00-00
DATE PLOTTED => 25-MAY-2010
TIME PLOTTED => 13:43

DIST	COUNTY	ROUTE	KILOMETER POST TOTAL PROJECT	SHEET No	TOTAL SHEETS
04	SF, Ala	80	12.2/14.3 0.0/4.0	407a 10S07	1204

Syn Yee Chin 03/08/10
REGISTERED ELECTRICAL ENGINEER DATE

05-06-2010
PLANS APPROVAL DATE

REGISTERED PROFESSIONAL ENGINEER
SYN YEE CHIN
No. 18186
Exp. 09/30/2011
ELECTRICAL
STATE OF CALIFORNIA

PB AMERICAS, Inc.
A Parsons Brinckerhoff Company
303 Second St., Suite 700N
San Francisco, CA 94107-1317

The State of California or its officers or agents shall not be responsible for the accuracy or completeness of electronic copies of this plan sheet.

Caltrans now has a web site! To get to the web site, go to http://www.dot.ca.gov

REQUEST FOR INFORMATION NOT ADDRESSED IN THIS CCO REMAIN IN FORCE

MARK	DATE	DESCRIPTIONS	BY	CH'D	CCO#
		REVISIONS			
0	03/08/10	MEP INTEGRATION	SYC	FW	110

CONTRACT CHANGE ORDER NO._____
SHEET _____ OF _____

Conduit/Tray No:	2545	Reference:	E-823A
Size:	103	Type:	RGS conduit
From:	2544	To:	2546
Total Fill (mm2):	3115.90	Remarks:	Installed in Skyway contract. System Ground cable is existing.
Allowable Fill (mm2):	3324.51		
Description of Changes:			

Included Cable No.	Conductor Type	Area (mm2)
2391	3-1/C #4/0, 15 KV, EPR insulation	2780.99
System Ground	500 kcmil, bare copper wire, stranded	334.91
Pull Rope	Soft-Fiber Polyester	0.00

Conduit/Tray No:	2546	Reference:	E-823A
Size:	103	Type:	Liquidtight flex metal conduit
From:	2545	To:	2T11
Total Fill (mm2):	3115.90	Remarks:	Installed in Skyway contract. System Ground cable is existing.
Allowable Fill (mm2):	3275.44		
Description of Changes:			

Included Cable No.	Conductor Type	Area (mm2)
2391	3-1/C #4/0, 15 KV, EPR insulation	2780.99
System Ground	500 kcmil, bare copper wire, stranded	334.91
Pull Rope	Soft-Fiber Polyester	0.00

Conduit/Tray No:	2567	Reference:	E-829A
Size:	103	Type:	Liquidtight flex metal conduit
From:	2T41 (on Skyway)	To:	2571
Total Fill (mm2):	323.65	Remarks:	Installed in Skyway contract.
Allowable Fill (mm2):	3275.44		
Description of Changes:			

Included Cable No.	Conductor Type	Area (mm2)
2475-4	72 Fiber, single mode fiber optic riser cable inside innerduct	323.65
Pull Rope	Soft-Fiber Polyester	0.00
Spare Innerduct	25.4mm Smoothwall Innerduct	0.00
Spare Innerduct	25.4mm Smoothwall Innerduct	0.00
Spare Innerduct	25.4mm Smoothwall Innerduct	0.00

Conduit/Tray No:	2571	Reference:	E-829A
Size:	103	Type:	RGS conduit
From:	2567	To:	2575
Total Fill (mm2):	323.65	Remarks:	Installed in Skyway contract.
Allowable Fill (mm2):	3324.51		
Description of Changes:			

Included Cable No.	Conductor Type	Area (mm2)
2475-4	72 Fiber, single mode fiber optic riser cable inside innerduct	323.65
Pull Rope	Soft-Fiber Polyester	0.00
Spare Innerduct	25.4mm Smoothwall Innerduct	0.00
Spare Innerduct	25.4mm Smoothwall Innerduct	0.00
Spare Innerduct	25.4mm Smoothwall Innerduct	0.00

Conduit/Tray No:	2575	Reference:	E-829A
Size:	103	Type:	Liquidtight flex metal conduit
From:	2571	To:	2T42
Total Fill (mm2):	323.65	Remarks:	Installed in Skyway contract.
Allowable Fill (mm2):	3275.44		
Description of Changes:			

Included Cable No.	Conductor Type	Area (mm2)
2475-4	72 Fiber, single mode fiber optic riser cable inside innerduct	323.65
Pull Rope	Soft-Fiber Polyester	0.00
Spare Innerduct	25.4mm Smoothwall Innerduct	0.00
Spare Innerduct	25.4mm Smoothwall Innerduct	0.00
Spare Innerduct	25.4mm Smoothwall Innerduct	0.00

EXISTING
CONDUIT AND TRAY SCHEDULE

E-1006

REVISED BY	DATE REVISED
SYC	01/10
FW	01/10

CALCULATED/DESIGNED BY
CHECKED BY

DESIGN OVERSIGHT
BEHZAD GOLEMOHAMMADI

STATE OF CALIFORNIA - DEPARTMENT OF TRANSPORTATION
Caltrans

THIS PLAN ACCURATE FOR ELECTRICAL WORK ONLY.

FOR REDUCED PLANS ORIGINAL SCALE IS IN MILLIMETERS 0 20 40 60 80

DGN FILE =>04-0120f1_E-1006.dgn
USERNAME =>llorico

CU 04251

EA 0120F1

LAST REVISION 00-00-00
DATE PLOTTED => 25-MAY-2010
TIME PLOTTED => 13:43

DIST	COUNTY	ROUTE	KILOMETER POST TOTAL PROJECT	SHEET No	TOTAL SHEETS
04	SF, Ala	80	12.2/14.3 0.0/4.0	407a 10S08	1204

Caltrans Metric

Syn Yee Chin 03/08/10
REGISTERED ELECTRICAL ENGINEER DATE

05-06-2010
PLANS APPROVAL DATE

REGISTERED PROFESSIONAL ENGINEER — SYN YEE CHIN No. 18186 Exp. 09/30/2011 ELECTRICAL — STATE OF CALIFORNIA

PB AMERICAS, Inc.
A Parsons Brinckerhoff Company
303 Second St., Suite 700N
San Francisco, CA 94107-1317

The State of California or its officers or agents shall not be responsible for the accuracy or completeness of electronic copies of this plan sheet.

Caltrans now has a web site! To get to the web site, go to http://www.dot.ca.gov

REQUEST FOR INFORMATION NOT ADDRESSED IN THIS CCO REMAIN IN FORCE

MARK	DATE	DESCRIPTIONS	BY	CH'D	CCO#
		REVISIONS			
0	03/08/10	MEP INTEGRATION	SYC	FW	110

CONTRACT CHANGE ORDER NO._____
SHEET _____ OF _____

Conduit/Tray No:	2593	Reference:	E-829A
Size:	103	Type:	Liquidtight flex metal conduit
From:	2T11	To:	2594
Total Fill (mm2):	3115.90	Remarks:	Installed in Skyway contract. System Ground cable is existing.
Allowable Fill (mm2):	3275.44		
Description of Changes:			

Included Cable No.	Conductor Type	Area (mm2)
2392	3-1/C #4/0, 15 KV, EPR insulation	2780.99
System Ground	500 kcmil, bare copper wire, stranded	334.91
Pull Rope	Soft-Fiber Polyester	0.00

Conduit/Tray No:	2594	Reference:	E-829A
Size:	103	Type:	RGS conduit
From:	2593	To:	2595
Total Fill (mm2):	3115.90	Remarks:	Installed in Skyway contract. System Ground cable is existing.
Allowable Fill (mm2):	3324.51		
Description of Changes:			

Included Cable No.	Conductor Type	Area (mm2)
2392	3-1/C #4/0, 15 KV, EPR insulation	2780.99
System Ground	500 kcmil, bare copper wire, stranded	334.91
Pull Rope	Soft-Fiber Polyester	0.00

Conduit/Tray No:	2595	Reference:	E-829A
Size:	103	Type:	Liquidtight flex metal conduit
From:	2594	To:	2T12
Total Fill (mm2):	3115.90	Remarks:	Installed in Skyway contract. System Ground cable is existing.
Allowable Fill (mm2):	3275.44		
Description of Changes:			

Included Cable No.	Conductor Type	Area (mm2)
2392	3-1/C #4/0, 15 KV, EPR insulation	2780.99
System Ground	500 kcmil, bare copper wire, stranded	334.91
Pull Rope	Soft-Fiber Polyester	0.00

Conduit/Tray No:	267	Reference:	E-634
Size:	103	Type:	RGS conduit
From:	Manhole-2	To:	1T1
Total Fill (mm2):	647.30	Remarks:	
Allowable Fill (mm2):	3324.51		
Description of Changes:			

Included Cable No.	Conductor Type	Area (mm2)
1475-7	72 Fiber, single mode fiber optic riser cable inside innerduct	323.65
1477-4	72 Fiber, single mode fiber optic riser cable inside innerduct	323.65
Pull Rope	Soft-Fiber Polyester	0.00
Spare Innerduct	25.4mm Smoothwall Innerduct	0.00
Spare Innerduct	25.4mm Smoothwall Innerduct	0.00

Conduit/Tray No:	2T10	Reference:	E-800, E-801, E-802, E-803, E-804, E-805, E-823A
Size:	305	Type:	152 mm siderail ladder tray
From:	Contract Interface @ Hinge AE	To:	Hinge BE
Total Fill (mm2):	3115.90	Remarks:	Installed in Skyway contract. System Ground cable is existing.
Allowable Fill (mm2):	8387.08		
Description of Changes:			

Included Cable No.	Conductor Type	Area (mm2)
2391	3-1/C #4/0, 15 KV, EPR insulation	2780.99
System Ground	500 kcmil, bare copper wire, stranded	334.91

EXISTING
CONDUIT AND TRAY SCHEDULE

E-1007

THIS PLAN ACCURATE FOR ELECTRICAL WORK ONLY.

REVISED BY	DATE REVISED
SYC	01/10
FW	01/10

CALCULATED/DESIGNED BY
CHECKED BY

DESIGN OVERSIGHT — BEHZAD GOLEMOHAMMADI

STATE OF CALIFORNIA - DEPARTMENT OF TRANSPORTATION
Caltrans

LAST REVISION 00-00-00
DATE PLOTTED => 25-MAY-2010
TIME PLOTTED => 13:43

FOR REDUCED PLANS ORIGINAL SCALE IS IN MILLIMETERS 0 20 40 60 80

DGN FILE =>04-0120f1_E-1007.dgn
USERNAME =>llorico

CU 04251

EA 0120F1

DIST	COUNTY	ROUTE	KILOMETER POST TOTAL PROJECT	SHEET No	TOTAL SHEETS
04	SF, Ala	80	12.2/14.3 0.0/4.0	407a 10S09	1204

Synyee Chin 03/08/10
REGISTERED ELECTRICAL ENGINEER DATE

05-06-2010
PLANS APPROVAL DATE

REGISTERED PROFESSIONAL ENGINEER
SYN YEE CHIN
No. 18186
Exp. 09/30/2011
ELECTRICAL
STATE OF CALIFORNIA

PB AMERICAS, Inc.
A Parsons Brinckerhoff Company
303 Second St., Suite 700N
San Francisco, CA 94107-1317

The State of California or its officers or agents shall not be responsible for the accuracy or completeness of electronic copies of this plan sheet.

Caltrans now has a web site! To get to the web site, go to http://www.dot.ca.gov

REQUEST FOR INFORMATION NOT ADDRESSED IN THIS CCO REMAIN IN FORCE

MARK	DATE	DESCRIPTIONS	BY	CH'D	CCO#
		REVISIONS			
0	03/08/10	MEP INTEGRATION	SYC	FW	110

CONTRACT CHANGE ORDER NO._____
SHEET _____ OF _____

Conduit/Tray No:	2T11	Reference:	E-805 TO E-810, E-823A, E-829A
Size:	305	Type:	152 mm siderail ladder tray
From:	Hinge BE	To:	Hinge CE
Total Fill (mm2):	5896.89	Remarks:	Installed in Skyway contract. System Ground cable is existing.
Allowable Fill (mm2):	8387.08		
Description of Changes:			

Included Cable No.	Conductor Type	Area (mm2)
2391	3-1/C #4/0, 15 KV, EPR insulation	2780.99
2392	3-1/C #4/0, 15 KV, EPR insulation	2780.99
System Ground	500 kcmil, bare copper wire, stranded	334.91

Conduit/Tray No:	2T12	Reference:	E-810 TO E-814, E-829A, E-833A
Size:	305	Type:	152 mm siderail ladder tray
From:	Hinge CE	To:	Hinge DE
Total Fill (mm2):	3115.90	Remarks:	Installed in Skyway contract. System Ground cable is existing.
Allowable Fill (mm2):	8387.08		
Description of Changes:			

Included Cable No.	Conductor Type	Area (mm2)
2392	3-1/C #4/0, 15 KV, EPR insulation	2780.99
System Ground	500 kcmil, bare copper wire, stranded	334.91

Conduit/Tray No:	2T13	Reference:	E-815, E-816, E-833A
Size:	305	Type:	152 mm siderail ladder tray
From:	Hinge DE	To:	Hinge EE Girder Interface
Total Fill (mm2):	3115.90	Remarks:	Installed in Skyway contract. System Ground cable is existing.
Allowable Fill (mm2):	8387.08		
Description of Changes:			

Included Cable No.	Conductor Type	Area (mm2)
2392	3-1/C #4/0, 15 KV, EPR insulation	2780.99
System Ground	500 kcmil, bare copper wire, stranded	334.91

Conduit/Tray No:	2T40	Reference:	E-800, E-801, E-802, E-803, E-804, E-805, E-823A
Size:	305	Type:	152 mm siderail solid bottom tray
From:	Contract Interface @ Hinge AE	To:	Hinge BE
Total Fill (mm2):	5251.25	Remarks:	Installed in Skyway and SAS contract. All cables are existing except 72 and 12 Fiber.
Allowable Fill (mm2):	19354.80		
Description of Changes:			

Included Cable No.	Conductor Type	Area (mm2)
2473-11	50 pair #18, shielded pairs, IS/OS shield 600 V, XLPE insul., PVC jacket	1201.71
2473-12	50 pair #18, shielded pairs, IS/OS shield 600 V, XLPE insul., PVC jacket	1201.71
2473-13	50 pair #18, shielded pairs, IS/OS shield 600 V, XLPE insul., PVC jacket	1201.71
2473-14	50 pair #18, shielded pairs, IS/OS shield 600 V, XLPE insul., PVC jacket	1201.71
2475-4	72 Fiber, single mode fiber optic riser cable	323.65
2475-4A	12 Fiber, single mode fiber optic cable	30.19
2475-4B	12 Fiber, single mode fiber optic cable	30.19
2475-4C	12 Fiber, single mode fiber optic cable	30.19
2475-4D	12 Fiber, single mode fiber optic cable	30.19

EXISTING
CONDUIT AND TRAY SCHEDULE

E-1008

THIS PLAN ACCURATE FOR ELECTRICAL WORK ONLY.

REVISED BY	DATE REVISED
SYC	01/10
FW	01/10

CALCULATED/DESIGNED BY
CHECKED BY

DESIGN OVERSIGHT
BEHZAD GOLEMOHAMMADI

STATE OF CALIFORNIA - DEPARTMENT OF TRANSPORTATION
Caltrans

FOR REDUCED PLANS ORIGINAL SCALE IS IN MILLIMETERS 0 20 40 60 80

DGN FILE =>04-0120f1_E-1008.dgn
USERNAME =>llorico

CU 04251

EA 0120F1

LAST REVISION 00-00-00
DATE PLOTTED => 25-MAY-2010
TIME PLOTTED => 13:43

DIST	COUNTY	ROUTE	KILOMETER POST TOTAL PROJECT	SHEET No	TOTAL SHEETS
04	SF, Ala	80	12.2/14.3 0.0/4.0	407a 10S10	1204

Syn Yee Chin 03/08/10
REGISTERED ELECTRICAL ENGINEER DATE

05-06-2010
PLANS APPROVAL DATE

REGISTERED PROFESSIONAL ENGINEER — SYN YEE CHIN No. 18186 Exp. 09/30/2011 ELECTRICAL — STATE OF CALIFORNIA

PB AMERICAS, Inc.
A Parsons Brinckerhoff Company
303 Second St., Suite 700N
San Francisco, CA 94107-1317

The State of California or its officers or agents shall not be responsible for the accuracy or completeness of electronic copies of this plan sheet.

Caltrans now has a web site! To get to the web site, go to http://www.dot.ca.gov

REQUEST FOR INFORMATION NOT ADDRESSED IN THIS CCO REMAIN IN FORCE

MARK	DATE	DESCRIPTIONS	SYC BY	FW CH'D	110 CCO#
0	03/08/10	MEP INTEGRATION			

REVISIONS

CONTRACT CHANGE ORDER NO._____
SHEET _____ OF _____

Conduit/Tray No: 2T41 | Reference: E-805 to E-810, E-823A, E-829A
Size: 305 | Type: 152 mm siderail solid bottom tray
From: Hinge BE | To: Hinge CE
Total Fill (mm2): 7684.86 | Remarks: Installed in Skyway contract. All cables are existing except 72 and 12 Fiber.
Allowable Fill (mm2): 19354.80
Description of Changes:

Included Cable No.	Conductor Type	Area (mm2)
2473-14	50 pair #18, shielded pairs, IS/OS shield 600 V, XLPE insul., PVC jacket	1201.71
2473-15	50 pair #18, shielded pairs, IS/OS shield 600 V, XLPE insul., PVC jacket	1201.71
2473-16	50 pair #18, shielded pairs, IS/OS shield 600 V, XLPE insul., PVC jacket	1201.71
2473-17	50 pair #18, shielded pairs, IS/OS shield 600 V, XLPE insul., PVC jacket	1201.71
2473-18	50 pair #18, shielded pairs, IS/OS shield 600 V, XLPE insul., PVC jacket	1201.71
2473-23	50 pair #18, shielded pairs, IS/OS shield 600 V, XLPE insul., PVC jacket	1201.71
2475-4	72 Fiber, single mode fiber optic riser cable	323.65
2475-4E	12 Fiber, single mode fiber optic cable	30.19
2475-4F1	12 Fiber, single mode fiber optic cable	30.19
2475-4F2	12 Fiber, single mode fiber optic cable	30.19
2475-4G	12 Fiber, single mode fiber optic cable	30.19
2475-4H	12 Fiber, single mode fiber optic cable	30.19

Conduit/Tray No: 2T42 | Reference: E-810 to E-814, E-829A, E-833A
Size: 305 | Type: 152 mm siderail solid bottom tray
From: Hinge CE | To: Hinge DE
Total Fill (mm2): 6422.77 | Remarks: Installed in Skyway contract. All cables are existing except 72 and 12 Fiber.
Allowable Fill (mm2): 19354.80
Description of Changes:

Included Cable No.	Conductor Type	Area (mm2)
2473-18	50 pair #18, shielded pairs, IS/OS shield 600 V, XLPE insul., PVC jacket	1201.71
2473-19	50 pair #18, shielded pairs, IS/OS shield 600 V, XLPE insul., PVC jacket	1201.71
2473-20	50 pair #18, shielded pairs, IS/OS shield 600 V, XLPE insul., PVC jacket	1201.71
2473-21	50 pair #18, shielded pairs, IS/OS shield 600 V, XLPE insul., PVC jacket	1201.71
2473-22	50 pair #18, shielded pairs, IS/OS shield 600 V, XLPE insul., PVC jacket	1201.71
2475-4	72 Fiber, single mode fiber optic riser cable	323.65
2475-4I	12 Fiber, single mode fiber optic cable	30.19
2475-4J	12 Fiber, single mode fiber optic cable	30.19
2475-4K	12 Fiber, single mode fiber optic cable	30.19

Conduit/Tray No: 2T43 | Reference: E-815, E-816
Size: 305 | Type: 152 mm siderail solid bottom tray
From: Hinge DE | To: Hinge EE Girder Interface
Total Fill (mm2): 1879.20 | Remarks: Installed in Skyway contract. All cables are existing except 72 and 12 Fiber.
Allowable Fill (mm2): 19354.80
Description of Changes:

Included Cable No.	Conductor Type	Area (mm2)
2473-22	50 pair #18, shielded pairs, IS/OS shield 600 V, XLPE insul., PVC jacket	1201.71
2475-4	72 Fiber, single mode fiber optic riser cable	323.65
2475-4L	12 Fiber, single mode fiber optic cable	30.19

Conduit/Tray No: 4012 | Reference: E-638
Size: 41 | Type: RGS-PVC coated conduit
From: PB-2B | To: Controller Cabinet #TOS-09WA
Total Fill (mm2): 30.19 | Remarks: Installed in Skyway contract.
Allowable Fill (mm2): 702.80
Description of Changes:

Included Cable No.	Conductor Type	Area (mm2)
1475-4A	12 Fiber, single mode fiber optic cable	30.19
Pull Rope	Soft-Fiber Polyester	0.00

Conduit/Tray No: 4032 | Reference: E-639
Size: 41 | Type: RGS-PVC coated conduit
From: PB-2B | To: Controller Cabinet #TOS-10WA
Total Fill (mm2): 30.19 | Remarks: Installed in Skyway contract.
Allowable Fill (mm2): 702.80
Description of Changes:

Included Cable No.	Conductor Type	Area (mm2)
1475-4B	12 Fiber, single mode fiber optic cable	30.19
Pull Rope	Soft-Fiber Polyester	0.00

EXISTING
CONDUIT AND TRAY SCHEDULE

E-1009

CALCULATED/ DESIGNED BY	CHECKED BY	SYC	FW	DATE 01/10	01/10	REVISED BY	DATE REVISED

DESIGN OVERSIGHT
BEHZAD GOLEMOHAMMADI

STATE OF CALIFORNIA - DEPARTMENT OF TRANSPORTATION
Caltrans

THIS PLAN ACCURATE FOR ELECTRICAL WORK ONLY.

FOR REDUCED PLANS ORIGINAL SCALE IS IN MILLIMETERS 0 20 40 60 80

DGN FILE =>04-0120f1_E-1009.dgn
USERNAME =>llorico

CU 04251 | EA 0120F1

LAST REVISION 00-00-00
DATE PLOTTED => 25-MAY-2010
TIME PLOTTED => 13:43

Conduit/Tray No:	4052	Reference:	E-640
Size:	41	Type:	RGS-PVC coated conduit
From:	PB-2B	To:	Junction Box
Total Fill (mm2):	60.38	Remarks:	Installed in Skyway contract.
Allowable Fill (mm2):	414.28		
Description of Changes:			

Included Cable No.	Conductor Type	Area (mm2)
1475-4C1	12 Fiber, single mode fiber optic cable	30.19
1475-4C2	12 Fiber, single mode fiber optic cable	30.19
Pull Rope	Soft-Fiber Polyester	0.00

Conduit/Tray No:	4058	Reference:	E-640
Size:	41	Type:	RGS-PVC coated conduit
From:	Junction Box	To:	Controller Cabinet #TOS-11WA
Total Fill (mm2):	30.19	Remarks:	Installed in Skyway contract.
Allowable Fill (mm2):	702.80		
Description of Changes:			

Included Cable No.	Conductor Type	Area (mm2)
1475-4C1	12 Fiber, single mode fiber optic cable	30.19
Pull Rope	Soft-Fiber Polyester	0.00

Conduit/Tray No:	4060	Reference:	E-640
Size:	41	Type:	RGS-PVC coated conduit
From:	Junction Box	To:	Controller Cabinet #TOS-11WB
Total Fill (mm2):	30.19	Remarks:	Installed in Skyway contract.
Allowable Fill (mm2):	702.80		
Description of Changes:			

Included Cable No.	Conductor Type	Area (mm2)
1475-4C2	12 Fiber, single mode fiber optic cable	30.19
Pull Rope	Soft-Fiber Polyester	0.00

Conduit/Tray No:	4082	Reference:	E-641
Size:	41	Type:	RGS-PVC coated conduit
From:	PB-2B	To:	Controller Cabinet #TOS-12WA
Total Fill (mm2):	30.19	Remarks:	Installed in Skyway contract.
Allowable Fill (mm2):	702.80		
Description of Changes:			

Included Cable No.	Conductor Type	Area (mm2)
1475-4D	12 Fiber, single mode fiber optic cable	30.19
Pull Rope	Soft-Fiber Polyester	0.00

REQUEST FOR INFORMATION NOT ADDRESSED IN THIS CCO REMAIN IN FORCE

MARK	DATE	DESCRIPTIONS	BY	CH'D	CCO#
		REVISIONS			
0	03/08/10	MEP INTEGRATION	SYC	FW	110

CONTRACT CHANGE ORDER NO._____
SHEET _____ OF _____

Caltrans Metric

DIST	COUNTY	ROUTE	KILOMETER POST TOTAL PROJECT	SHEET No	TOTAL SHEETS
04	SF, Ala	80	12.2/14.3 0.0/4.0	407a 10S11	1204

Syn Yee Chin 03/08/10
REGISTERED ELECTRICAL ENGINEER DATE

05-06-2010
PLANS APPROVAL DATE

REGISTERED PROFESSIONAL ENGINEER
SYN YEE CHIN
No. 18186
Exp. 09/30/2011
ELECTRICAL
STATE OF CALIFORNIA

PB AMERICAS, Inc.
A Parsons Brinckerhoff Company
303 Second St., Suite 700N
San Francisco, CA 94107-1317

The State of California or its officers or agents shall not be responsible for the accuracy or completeness of electronic copies of this plan sheet.

Caltrans now has a web site! To get to the web site, go to http://www.dot.ca.gov

Conduit/Tray No:	4102	Reference:	E-643
Size:	41	Type:	RGS-PVC coated conduit
From:	PB-2B	To:	Controller Cabinet #TOS-13WA
Total Fill (mm2):	30.19	Remarks:	Installed in Skyway contract.
Allowable Fill (mm2):	702.80		
Description of Changes:			

Included Cable No.	Conductor Type	Area (mm2)
1475-4E	12 Fiber, single mode fiber optic cable	30.19
Pull Rope	Soft-Fiber Polyester	0.00

Conduit/Tray No:	4142	Reference:	E-646
Size:	41	Type:	RGS-PVC coated conduit
From:	PB-2B	To:	Controller Cabinet #TOS-15WA
Total Fill (mm2):	30.19	Remarks:	Installed in Skyway contract.
Allowable Fill (mm2):	702.80		
Description of Changes:			

Included Cable No.	Conductor Type	Area (mm2)
1475-4F	12 Fiber, single mode fiber optic cable	30.19
Pull Rope	Soft-Fiber Polyester	0.00

Conduit/Tray No:	4162	Reference:	E-647
Size:	41	Type:	RGS-PVC coated conduit
From:	PB-2B	To:	Controller Cabinet #TOS-16WA
Total Fill (mm2):	30.19	Remarks:	Installed in Skyway contract.
Allowable Fill (mm2):	702.80		
Description of Changes:			

Included Cable No.	Conductor Type	Area (mm2)
1475-4G	12 Fiber, single mode fiber optic cable	30.19
Pull Rope	Soft-Fiber Polyester	0.00

EXISTING
CONDUIT AND TRAY SCHEDULE

E-1010

CALCULATED/ DESIGNED BY	CHECKED BY
SYC	FW
DATE 01/10	01/10
REVISED BY	DATE REVISED

DESIGN OVERSIGHT
BEHZAD GOLEMOHAMMADI

STATE OF CALIFORNIA - DEPARTMENT OF TRANSPORTATION
Caltrans

THIS PLAN ACCURATE FOR ELECTRICAL WORK ONLY.

LAST REVISION 00-00-00
DATE PLOTTED => 25-MAY-2010
TIME PLOTTED => 13:43

FOR REDUCED PLANS ORIGINAL SCALE IS IN MILLIMETERS 0 20 40 60 80

DGN FILE =>04-0120f1_E-1010.dgn
USERNAME =>llorico

CU 04251

EA 0120F1

Conduit/Tray No:	4187
Size:	41
From:	PB-2B
To:	Controller Cabinet #TOS-17WA
Total Fill (mm2):	30.19
Allowable Fill (mm2):	702.80
Reference:	E-649
Type:	RGS-PVC coated conduit
Remarks:	Installed in Skyway contract.
Description of Changes:	

Included Cable No.	Conductor Type	Area (mm2)
1475-4H	12 Fiber, single mode fiber optic cable	30.19
Pull Rope	Soft-Fiber Polyester	0.00

Conduit/Tray No:	4213
Size:	41
From:	PB-2B
To:	Controller Cabinet #TOS-18WA
Total Fill (mm2):	60.38
Allowable Fill (mm2):	414.28
Reference:	E-650
Type:	RGS-PVC coated conduit
Remarks:	Installed in Skyway contract.
Description of Changes:	

Included Cable No.	Conductor Type	Area (mm2)
1475-4I1	12 Fiber, single mode fiber optic cable	30.19
1475-4I2	12 Fiber, single mode fiber optic cable	30.19
Pull Rope	Soft-Fiber Polyester	0.00

Conduit/Tray No:	4257
Size:	41
From:	PB-2B
To:	Controller Cabinet #TOS-20WA
Total Fill (mm2):	30.19
Allowable Fill (mm2):	702.80
Reference:	E-652
Type:	RGS-PVC coated conduit
Remarks:	Installed in Skyway contract.
Description of Changes:	

Included Cable No.	Conductor Type	Area (mm2)
1475-4J	12 Fiber, single mode fiber optic cable	30.19
Pull Rope	Soft-Fiber Polyester	0.00

Conduit/Tray No:	4276
Size:	41
From:	PB-2B
To:	Controller Cabinet #TOS-21WA
Total Fill (mm2):	30.19
Allowable Fill (mm2):	702.80
Reference:	E-654
Type:	RGS-PVC coated conduit
Remarks:	Installed in Skyway contract.
Description of Changes:	

Included Cable No.	Conductor Type	Area (mm2)
1475-4K	12 Fiber, single mode fiber optic cable	30.19
Pull Rope	Soft-Fiber Polyester	0.00

REQUEST FOR INFORMATION NOT ADDRESSED IN THIS CCO REMAIN IN FORCE

MARK	DATE	DESCRIPTIONS	BY	CH'D	CCO#
		REVISIONS			
0	03/08/10	MEP INTEGRATION	SYC	FW	110

CONTRACT CHANGE ORDER NO._____
SHEET _____ OF _____

Caltrans Metric

DIST	COUNTY	ROUTE	KILOMETER POST TOTAL PROJECT	SHEET No	TOTAL SHEETS
04	SF, Ala	80	12.2/14.3 0.0/4.0	407a 10S12	1204

Syn Yee Chin 03/08/10
REGISTERED ELECTRICAL ENGINEER DATE

05-06-2010
PLANS APPROVAL DATE

REGISTERED PROFESSIONAL ENGINEER
SYN YEE CHIN
No. 18186
Exp. 09/30/2011
ELECTRICAL
STATE OF CALIFORNIA

PB AMERICAS, Inc.
A Parsons Brinckerhoff Company
303 Second St., Suite 700N
San Francisco, CA 94107-1317

The State of California or its officers or agents shall not be responsible for the accuracy or completeness of electronic copies of this plan sheet.

Caltrans now has a web site! To get to the web site, go to http://www.dot.ca.gov

Conduit/Tray No:	4302
Size:	103
From:	15kV Vault @ Pier E17L
To:	15kV Vault @ Pier E18L
Total Fill (mm2):	2780.99
Allowable Fill (mm2):	3324.51
Reference:	E-617, E-656, E-657
Type:	RGS conduit
Remarks:	Installed in OTD-1 contract.
Description of Changes:	

Included Cable No.	Conductor Type	Area (mm2)
1392	3-1/C #4/0, 15 KV, EPR insulation	2780.99
Pull Rope	Soft-Fiber Polyester	0.00

Conduit/Tray No:	4315
Size:	103
From:	15kV Vault @ Pier E18L
To:	15kV Vault @ Hinge FW
Total Fill (mm2):	2780.99
Allowable Fill (mm2):	3324.51
Reference:	E-618, E-657, E-659
Type:	RGS conduit
Remarks:	Installed in OTD-1 contract.
Description of Changes:	

Included Cable No.	Conductor Type	Area (mm2)
1392	3-1/C #4/0, 15 KV, EPR insulation	2780.99
Pull Rope	Soft-Fiber Polyester	0.00

EXISTING
CONDUIT AND TRAY SCHEDULE

E-1011

DATE	REVISED BY
01/10	DATE REVISED
SYC	FW

CALCULATED/DESIGNED BY
CHECKED BY

DESIGN OVERSIGHT
BEHZAD GOLEMOHAMMADI

STATE OF CALIFORNIA - DEPARTMENT OF TRANSPORTATION
Caltrans

THIS PLAN ACCURATE FOR ELECTRICAL WORK ONLY.

FOR REDUCED PLANS ORIGINAL SCALE IS IN MILLIMETERS 0 20 40 60 80

DGN FILE =>04-0120f1_E-1011.dgn
USERNAME =>llorico

CU 04251

EA 0120F1

DATE PLOTTED => 25-MAY-2010
TIME PLOTTED => 13:43

LAST REVISION 00-00-00

DIST	COUNTY	ROUTE	KILOMETER POST TOTAL PROJECT	SHEET No	TOTAL SHEETS
04	SF, Ala	80	12.2/14.3 0.0/4.0	407a 10S13	1204

Syn Yee Chin 03/08/10
REGISTERED ELECTRICAL ENGINEER DATE

05-06-2010
PLANS APPROVAL DATE

REGISTERED PROFESSIONAL ENGINEER
SYN YEE CHIN
No. 18186
Exp. 09/30/2011
ELECTRICAL
STATE OF CALIFORNIA

PB AMERICAS, Inc.
A Parsons Brinckerhoff Company
303 Second St., Suite 700N
San Francisco, CA 94107-1317

The State of California or its officers or agents shall not be responsible for the accuracy or completeness of electronic copies of this plan sheet.

Caltrans now has a web site! To get to the web site, go to http://www.dot.ca.gov

REQUEST FOR INFORMATION NOT ADDRESSED IN THIS CCO REMAIN IN FORCE

MARK	DATE	REVISIONS DESCRIPTIONS	BY	CH'D	CCO#
0	03/08/10	MEP INTEGRATION	SYC	FW	110

CONTRACT CHANGE ORDER NO._____
SHEET _____ OF _____

Conduit/Tray No: 4330 Reference: E-618, E-619, E-659, E-660, E-662
Size: 103 Type: RGS conduit
From: 15kV Vault @ Hinge FW To: 15kV Vault @ Pier E22L
Total Fill (mm2): 2780.99 Remarks: Installed in OTD-1 contract.
Allowable Fill (mm2): 3324.51
Description of Changes:

Included Cable No.	Conductor Type	Area (mm2)
1392	3-1/C #4/0, 15 KV, EPR insulation	2780.99
Pull Rope	Soft-Fiber Polyester	0.00

Conduit/Tray No: 4364 Reference: E-619, E-620, E-662
Size: 103 Type: RGS conduit
From: TOS/COM Vault @ Pier E22L To: 1T25
Total Fill (mm2): 323.65 Remarks: Installed in OTD-1 contract.
Allowable Fill (mm2): 3324.51
Description of Changes:

Included Cable No.	Conductor Type	Area (mm2)
1475-7	72 Fiber, single mode fiber optic riser cable inside innerduct	323.65
Pull Rope	Soft-Fiber Polyester	0.00
Spare Innerduct	25.4mm Smoothwall Innerduct	0.00
Spare Innerduct	25.4mm Smoothwall Innerduct	0.00
Spare Innerduct	25.4mm Smoothwall Innerduct	0.00
Spare Innerduct	25.4mm Smoothwall Innerduct	0.00

Conduit/Tray No: 4370 Reference: E-617, E-656, E-657
Size: 103 Type: RGS conduit
From: TOS/COM Vault @ Pier E17L To: TOS/COM Vault @ Pier E18L
Total Fill (mm2): 323.65 Remarks: Installed in OTD-1 contract.
Allowable Fill (mm2): 3324.51
Description of Changes:

Included Cable No.	Conductor Type	Area (mm2)
1477-4	72 Fiber, single mode fiber optic riser cable inside innerduct	323.65
Pull Rope	Soft-Fiber Polyester	0.00
Spare Innerduct	25.4mm Smoothwall Innerduct	0.00
Spare Innerduct	25.4mm Smoothwall Innerduct	0.00
Spare Innerduct	25.4mm Smoothwall Innerduct	0.00

Conduit/Tray No: 4371 Reference: E-618, E-657, E-659
Size: 103 Type: RGS conduit
From: TOS/COM Vault @ Pier E18L To: TOS/COM Vault @ Hinge FW
Total Fill (mm2): 323.65 Remarks: Installed in OTD-1 contract.
Allowable Fill (mm2): 3324.51
Description of Changes:

Included Cable No.	Conductor Type	Area (mm2)
1477-4	72 Fiber, single mode fiber optic riser cable inside innerduct	323.65
Pull Rope	Soft-Fiber Polyester	0.00
Spare Innerduct	25.4mm Smoothwall Innerduct	0.00
Spare Innerduct	25.4mm Smoothwall Innerduct	0.00
Spare Innerduct	25.4mm Smoothwall Innerduct	0.00

Conduit/Tray No: 4372 Reference: E-618, E-619, E-659, E-660, E-662
Size: 103 Type: RGS conduit
From: TOS/COM Vault @ Hinge FW To: TOS/COM Vault @ Pier E22L
Total Fill (mm2): 323.65 Remarks: Installed in OTD-1 contract.
Allowable Fill (mm2): 3324.51
Description of Changes:

Included Cable No.	Conductor Type	Area (mm2)
1477-4	72 Fiber, single mode fiber optic riser cable inside innerduct	323.65
Pull Rope	Soft-Fiber Polyester	0.00
Spare Innerduct	25.4mm Smoothwall Innerduct	0.00
Spare Innerduct	25.4mm Smoothwall Innerduct	0.00
Spare Innerduct	25.4mm Smoothwall Innerduct	0.00

EXISTING
CONDUIT AND TRAY SCHEDULE

E-1012

THIS PLAN ACCURATE FOR ELECTRICAL WORK ONLY.

REVISED BY	DATE REVISED
SYC	03/10
FW	03/10

CALCULATED/DESIGNED BY
CHECKED BY

DESIGN OVERSIGHT
BEHZAD GOLEMOHAMMADI

STATE OF CALIFORNIA - DEPARTMENT OF TRANSPORTATION
Caltrans

LAST REVISION 00-00-00
DATE PLOTTED => 25-MAY-2010
TIME PLOTTED => 13:44

FOR REDUCED PLANS ORIGINAL SCALE IS IN MILLIMETERS 0 20 40 60 80

DGN FILE =>04-0120f1_E-1012.dgn
USERNAME =>llorico

CU 04251

EA 0120F1

DIST	COUNTY	ROUTE	KILOMETER POST TOTAL PROJECT	SHEET No	TOTAL SHEETS
04	SF, Ala	80	12.2/14.3 0.0/4.0	407a 10S14	1204

Syn Yee Chin 03/08/10
REGISTERED ELECTRICAL ENGINEER DATE

05-06-2010
PLANS APPROVAL DATE

REGISTERED PROFESSIONAL ENGINEER
SYN YEE CHIN
No. 18186
Exp. 09/30/2011
ELECTRICAL
STATE OF CALIFORNIA

PB AMERICAS, Inc.
A Parsons Brinckerhoff Company
303 Second St., Suite 700N
San Francisco, CA 94107-1317

The State of California or its officers or agents shall not be responsible for the accuracy or completeness of electronic copies of this plan sheet.

Caltrans now has a web site! To get to the web site, go to http://www.dot.ca.gov

REQUEST FOR INFORMATION NOT ADDRESSED IN THIS CCO REMAIN IN FORCE

MARK	DATE	DESCRIPTIONS	BY	CH'D	CCO#
		REVISIONS			
0	03/08/10	MEP INTEGRATION	SYC	FW	110

CONTRACT CHANGE ORDER NO._____
SHEET _____ OF _____

Conduit/Tray No:	4374	Reference:	E-619, E-620, E-662
Size:	103	Type:	RGS conduit
From:	TOS/COM Vault @ Pier E22L	To:	1T25
Total Fill (mm2):	323.65	Remarks:	Installed in OTD-1 contract.
Allowable Fill (mm2):	3324.51		
Description of Changes:			

Included Cable No.	Conductor Type	Area (mm2)
1477-4	72 Fiber, single mode fiber optic riser cable inside innerduct	323.65
Pull Rope	Soft-Fiber Polyester	0.00
Spare Innerduct	25.4mm Smoothwall Innerduct	0.00
Spare Innerduct	25.4mm Smoothwall Innerduct	0.00
Spare Innerduct	25.4mm Smoothwall Innerduct	0.00

Conduit/Tray No:	4379	Reference:	E-618, E-657
Size:	103	Type:	RGS conduit
From:	TOS/COM Vault @ Pier E18L	To:	TOS/COM cell @ Pier E18L
Total Fill (mm2):	323.65	Remarks:	Installed in OTD-1 contract.
Allowable Fill (mm2):	3324.51		
Description of Changes:			

Included Cable No.	Conductor Type	Area (mm2)
1475-5	72 Fiber, single mode fiber optic riser cable inside innerduct	323.65
Pull Rope	Soft-Fiber Polyester	0.00
Spare Innerduct	25.4mm Smoothwall Innerduct	0.00
Spare Innerduct	25.4mm Smoothwall Innerduct	0.00
Spare Innerduct	25.4mm Smoothwall Innerduct	0.00

Conduit/Tray No:	4380	Reference:	E-617, E-656, E-657
Size:	103	Type:	RGS conduit
From:	TOS/COM Vault @ Pier E17L	To:	TOS/COM Vault @ Pier E18L
Total Fill (mm2):	323.65	Remarks:	Installed in OTD-1 contract.
Allowable Fill (mm2):	3324.51		
Description of Changes:			

Included Cable No.	Conductor Type	Area (mm2)
1475-5	72 Fiber, single mode fiber optic riser cable inside innerduct	323.65
Pull Rope	Soft-Fiber Polyester	0.00
Spare Innerduct	25.4mm Smoothwall Innerduct	0.00
Spare Innerduct	25.4mm Smoothwall Innerduct	0.00
Spare Innerduct	25.4mm Smoothwall Innerduct	0.00

Conduit/Tray No:	4381	Reference:	E-618, E-657, E-659
Size:	103	Type:	RGS conduit
From:	TOS/COM cell @ Pier E18L	To:	TOS/COM Vault @ Hinge FW
Total Fill (mm2):	323.65	Remarks:	Installed in OTD-1 contract.
Allowable Fill (mm2):	3324.51		
Description of Changes:			

Included Cable No.	Conductor Type	Area (mm2)
1475-6	72 Fiber, single mode fiber optic riser cable inside innerduct	323.65
Pull Rope	Soft-Fiber Polyester	0.00
Spare Innerduct	25.4mm Smoothwall Innerduct	0.00
Spare Innerduct	25.4mm Smoothwall Innerduct	0.00
Spare Innerduct	25.4mm Smoothwall Innerduct	0.00

Conduit/Tray No:	4382	Reference:	E-618, E-619, E-659, E-660
Size:	103	Type:	RGS conduit
From:	TOS/COM Vault @ Hinge FW	To:	TOS/COM cell @ Pier E21L
Total Fill (mm2):	323.65	Remarks:	Installed in OTD-1 contract.
Allowable Fill (mm2):	3324.51		
Description of Changes:			

Included Cable No.	Conductor Type	Area (mm2)
1475-6	72 Fiber, single mode fiber optic riser cable inside innerduct	323.65
Pull Rope	Soft-Fiber Polyester	0.00
Spare Innerduct	25.4mm Smoothwall Innerduct	0.00
Spare Innerduct	25.4mm Smoothwall Innerduct	0.00
Spare Innerduct	25.4mm Smoothwall Innerduct	0.00

EXISTING
CONDUIT AND TRAY SCHEDULE

E-1013

THIS PLAN ACCURATE FOR ELECTRICAL WORK ONLY.

DESIGN OVERSIGHT: BEHZAD GOLEMOHAMMADI
CALCULATED/DESIGNED BY: SYC
CHECKED BY: FW
DATE: 01/10
REVISED BY: DATE REVISED

STATE OF CALIFORNIA - DEPARTMENT OF TRANSPORTATION
Caltrans

LAST REVISION 00-00-00
DATE PLOTTED => 25-MAY-2010
TIME PLOTTED => 13:44

FOR REDUCED PLANS ORIGINAL SCALE IS IN MILLIMETERS 0 20 40 60 80

DGN FILE =>04-0120f1_E-1013.dgn
USERNAME =>llorico

CU 04251

EA 0120F1

DIST	COUNTY	ROUTE	KILOMETER POST TOTAL PROJECT	SHEET No	TOTAL SHEETS
04	SF, Ala	80	12.2/14.3 0.0/4.0	407a 10S15	1204

Syn Yee Chin 03/08/10
REGISTERED ELECTRICAL ENGINEER DATE

05-06-2010
PLANS APPROVAL DATE

REGISTERED PROFESSIONAL ENGINEER
SYN YEE CHIN
No. 18186
Exp. 09/30/2011
ELECTRICAL
STATE OF CALIFORNIA

PB AMERICAS, Inc.
A Parsons Brinckerhoff Company
303 Second St., Suite 700N
San Francisco, CA 94107-1317

The State of California or its officers or agents shall not be responsible for the accuracy or completeness of electronic copies of this plan sheet.

Caltrans now has a web site! To get to the web site, go to http://www.dot.ca.gov

REQUEST FOR INFORMATION NOT ADDRESSED IN THIS CCO REMAIN IN FORCE

MARK	DATE	DESCRIPTIONS	BY	CH'D	CCO#
		REVISIONS			
0	03/08/10	MEP INTEGRATION	SYC	FW	110

CONTRACT CHANGE ORDER NO._____
SHEET _____ OF _____

Conduit/Tray No:	4383	Reference:	E-619, E-660, E-662
Size:	103	Type:	RGS conduit
From:	TOS/COM cell @ Pier E21L	To:	TOS/COM Vault @ Pier E22L
Total Fill (mm2):	323.65	Remarks:	Installed in OTD-1 contract.
Allowable Fill (mm2):	3324.51		
Description of Changes:			

Included Cable No.	Conductor Type	Area (mm2)
1475-7	72 Fiber, single mode fiber optic riser cable inside innerduct	323.65
Pull Rope	Soft-Fiber Polyester	0.00
Spare Innerduct	25.4mm Smoothwall Innerduct	0.00
Spare Innerduct	25.4mm Smoothwall Innerduct	0.00
Spare Innerduct	25.4mm Smoothwall Innerduct	0.00

Conduit/Tray No:	4385	Reference:	E-661
Size:	78	Type:	RGS-PVC coated conduit
From:	TOS/COM cell @ Pier E21L	To:	Splice Cabinet #TOS- 23WS
Total Fill (mm2):	647.30	Remarks:	Installed in OTD-1 contract.
Allowable Fill (mm2):	1935.24		
Description of Changes:			

Included Cable No.	Conductor Type	Area (mm2)
1475-6	72 Fiber, single mode fiber optic riser cable inside innerduct	323.65
1475-7	72 Fiber, single mode fiber optic riser cable inside innerduct	323.65
Pull Rope	Soft-Fiber Polyester	0.00
Spare Innerduct	25.4mm Smoothwall Innerduct	0.00

Conduit/Tray No:	4388	Reference:	E-658
Size:	78	Type:	RGS-PVC coated conduit
From:	TOS/COM cell @ Pier E18L	To:	Splice Cabinet #TOS- 22WS
Total Fill (mm2):	647.30	Remarks:	Installed in OTD-1 contract.
Allowable Fill (mm2):	1935.24		
Description of Changes:			

Included Cable No.	Conductor Type	Area (mm2)
1475-5	72 Fiber, single mode fiber optic riser cable inside innerduct	323.65
1475-6	72 Fiber, single mode fiber optic riser cable inside innerduct	323.65
Pull Rope	Soft-Fiber Polyester	0.00
Spare Innerduct	25.4mm Smoothwall Innerduct	0.00

Conduit/Tray No:	4610	Reference:	E-644
Size:	78	Type:	RGS conduit
From:	Stub-up below 1T41 (on Skyway)	To:	Tel. Terminal Box #TEL-Sub. WB
Total Fill (mm2):	1201.71	Remarks:	Installed in Skyway contract.
Allowable Fill (mm2):	2564.19		
Description of Changes:			

Included Cable No.	Conductor Type	Area (mm2)
1473-23	50 pair #18, shielded pairs, IS/OS shield 600 V, XLPE insul., PVC jacket	1201.71
Pull Rope	Soft-Fiber Polyester	0.00

Conduit/Tray No:	4616	Reference:	E-644
Size:	78	Type:	RGS conduit
From:	Stub-up below 1T41 (on Skyway)	To:	Tel. Terminal Box #TEL-Sub. WB
Total Fill (mm2):	1201.71	Remarks:	Installed in Skyway contract.
Allowable Fill (mm2):	2564.19		
Description of Changes:			

Included Cable No.	Conductor Type	Area (mm2)
1473-15	50 pair #18, shielded pairs, IS/OS shield 600 V, XLPE insul., PVC jacket	1201.71
Pull Rope	Soft-Fiber Polyester	0.00

EXISTING
CONDUIT AND TRAY SCHEDULE

E-1014

THIS PLAN ACCURATE FOR ELECTRICAL WORK ONLY.

CALCULATED/ DESIGNED BY	CHECKED BY
SYC	FW
DATE 01/10	01/10
REVISED BY	DATE REVISED

DESIGN OVERSIGHT
BEHZAD GOLEMOHAMMADI

STATE OF CALIFORNIA - DEPARTMENT OF TRANSPORTATION
Caltrans

LAST REVISION 00-00-00
DATE PLOTTED => 25-MAY-2010
TIME PLOTTED => 13:44

FOR REDUCED PLANS ORIGINAL SCALE IS IN MILLIMETERS 0 20 40 60 80

DGN FILE =>04-0120f1_E-1014.dgn
USERNAME =>llorico

CU 04251

EA 0120F1

DIST	COUNTY	ROUTE	KILOMETER POST TOTAL PROJECT	SHEET No	TOTAL SHEETS
04	SF, Ala	80	12.2/14.3 0.0/4.0	407a 10S16	1204

Syn Yee Chin 03/08/10
REGISTERED ELECTRICAL ENGINEER DATE

05-06-2010
PLANS APPROVAL DATE

REGISTERED PROFESSIONAL ENGINEER — SYN YEE CHIN No. 18186 Exp. 09/30/2011 ELECTRICAL — STATE OF CALIFORNIA

PB AMERICAS, Inc.
A Parsons Brinckerhoff Company
303 Second St., Suite 700N
San Francisco, CA 94107-1317

The State of California or its officers or agents shall not be responsible for the accuracy or completeness of electronic copies of this plan sheet.

Caltrans now has a web site! To get to the web site, go to http://www.dot.ca.gov

REQUEST FOR INFORMATION NOT ADDRESSED IN THIS CCO REMAIN IN FORCE

MARK	DATE	REVISIONS	BY	CH'D	CCO#
0	03/08/10	MEP INTEGRATION	SYC	FW	110

CONTRACT CHANGE ORDER NO._____
SHEET_____ OF _____

Conduit/Tray No:	4804	Reference:	E-658
Size:	53	Type:	RGS-PVC coated conduit
From:	Splice Cabinet #TOS- 22WS	To:	Controller Cabinet #TOS-22WA
Total Fill (mm2):	30.19	Remarks:	Installed in OTD-1 contract.
Allowable Fill (mm2):	879.42		
Description of Changes:			

Included Cable No.	Conductor Type	Area (mm2)
1475-5A	12 Fiber, single mode fiber optic cable	30.19
Pull Rope	Soft-Fiber Polyester	0.00

Conduit/Tray No:	4837	Reference:	E-661
Size:	78	Type:	RGS-PVC coated conduit
From:	Splice Cabinet #TOS- 23WS	To:	Controller Cabinet #TOS-23WA
Total Fill (mm2):	30.19	Remarks:	Installed in OTD-1 contract.
Allowable Fill (mm2):	2564.19		
Description of Changes:			

Included Cable No.	Conductor Type	Area (mm2)
1475-5B	12 Fiber, single mode fiber optic cable	30.19
Pull Rope	Soft-Fiber Polyester	0.00

Conduit/Tray No:	4852	Reference:	E-638
Size:	78	Type:	RGS conduit
From:	1T40	To:	PB-2B
Total Fill (mm2):	30.19	Remarks:	Installed in Skyway contract.
Allowable Fill (mm2):	2564.19		
Description of Changes:			

Included Cable No.	Conductor Type	Area (mm2)
1475-4A	12 Fiber, single mode fiber optic cable	30.19
Pull Rope	Soft-Fiber Polyester	0.00

Conduit/Tray No:	4859	Reference:	E-638
Size:	78	Type:	RGS-PVC coated conduit
From:	1T40	To:	Tel. Terminal Box #TEL-09W
Total Fill (mm2):	1201.71	Remarks:	Installed in Skyway contract.
Allowable Fill (mm2):	2564.19		
Description of Changes:			

Included Cable No.	Conductor Type	Area (mm2)
1473-11	50 pair #18, shielded pairs, IS/OS shield 600 V, XLPE insul., PVC jacket	1201.71
Pull Rope	Soft-Fiber Polyester	0.00

Conduit/Tray No:	4862	Reference:	E-639
Size:	78	Type:	RGS-PVC coated conduit
From:	1T40	To:	PB-2B
Total Fill (mm2):	30.19	Remarks:	Installed in Skyway contract.
Allowable Fill (mm2):	2564.19		
Description of Changes:			

Included Cable No.	Conductor Type	Area (mm2)
1475-4B	12 Fiber, single mode fiber optic cable	30.19
Pull Rope	Soft-Fiber Polyester	0.00

Conduit/Tray No:	4868	Reference:	E-639
Size:	78	Type:	RGS-PVC coated conduit
From:	1T40	To:	Tel. Terminal Box #TEL-10W
Total Fill (mm2):	1201.71	Remarks:	Installed in Skyway contract.
Allowable Fill (mm2):	2564.19		
Description of Changes:			

Included Cable No.	Conductor Type	Area (mm2)
1473-11	50 pair #18, shielded pairs, IS/OS shield 600 V, XLPE insul., PVC jacket	1201.71
Pull Rope	Soft-Fiber Polyester	0.00

EXISTING
CONDUIT AND TRAY SCHEDULE

E-1015

THIS PLAN ACCURATE FOR ELECTRICAL WORK ONLY.

DESIGN OVERSIGHT — BEHZAD GOLEMOHAMMADI
CALCULATED/DESIGNED BY — SYC
CHECKED BY — FW
DATE REVISED — 01/10
REVISED BY

STATE OF CALIFORNIA - DEPARTMENT OF TRANSPORTATION
Caltrans

DATE PLOTTED => 25-MAY-2010
TIME PLOTTED => 13:44
LAST REVISION 00-00-00

FOR REDUCED PLANS ORIGINAL SCALE IS IN MILLIMETERS 0 20 40 60 80

DGN FILE =>04-0120f1_E-1015.dgn
USERNAME =>llorico

CU 04251 EA 0120F1

Conduit/Tray No:	4869	Reference:	E-639
Size:	78	Type:	RGS-PVC coated conduit
From:	1T40	To:	Tel. Terminal Box #TEL-10W
Total Fill (mm2):	1201.71	Remarks:	Installed in Skyway contract.
Allowable Fill (mm2):	2564.19		
Description of Changes:			

Included Cable No.	Conductor Type	Area (mm2)
1473-12	50 pair #18, shielded pairs, IS/OS shield 600 V, XLPE insul., PVC jacket	1201.71
Pull Rope	Soft-Fiber Polyester	0.00

Conduit/Tray No:	4872	Reference:	E-640
Size:	78	Type:	RGS-PVC coated conduit
From:	1T40	To:	PB-2B
Total Fill (mm2):	60.38	Remarks:	Installed in Skyway contract.
Allowable Fill (mm2):	1499.81		
Description of Changes:			

Included Cable No.	Conductor Type	Area (mm2)
1475-4C1	12 Fiber, single mode fiber optic cable	30.19
1475-4C2	12 Fiber, single mode fiber optic cable	30.19
Pull Rope	Soft-Fiber Polyester	0.00

Conduit/Tray No:	4878	Reference:	E-640
Size:	78	Type:	RGS-PVC coated conduit
From:	1T40	To:	Tel. Terminal Box #TEL-11W
Total Fill (mm2):	1201.71	Remarks:	Installed in Skyway contract.
Allowable Fill (mm2):	2564.19		
Description of Changes:			

Included Cable No.	Conductor Type	Area (mm2)
1473-12	50 pair #18, shielded pairs, IS/OS shield 600 V, XLPE insul., PVC jacket	1201.71
Pull Rope	Soft-Fiber Polyester	0.00

Conduit/Tray No:	4879	Reference:	E-640
Size:	78	Type:	RGS-PVC coated conduit
From:	1T40	To:	Tel. Terminal Box #TEL-11W
Total Fill (mm2):	1201.71	Remarks:	Installed in Skyway contract.
Allowable Fill (mm2):	2564.19		
Description of Changes:			

Included Cable No.	Conductor Type	Area (mm2)
1473-13	50 pair #18, shielded pairs, IS/OS shield 600 V, XLPE insul., PVC jacket	1201.71
Pull Rope	Soft-Fiber Polyester	0.00

THIS PLAN ACCURATE FOR ELECTRICAL WORK ONLY.

Caltrans Metric

DIST	COUNTY	ROUTE	KILOMETER POST TOTAL PROJECT	SHEET No	TOTAL SHEETS
04	SF, Ala	80	12.2/14.3 0.0/4.0	407a 10S17	1204

Syn Yee Chin 03/08/10
REGISTERED ELECTRICAL ENGINEER DATE

05-06-2010
PLANS APPROVAL DATE

REGISTERED PROFESSIONAL ENGINEER
SYN YEE CHIN
No. 18186
Exp. 09/30/2011
ELECTRICAL
STATE OF CALIFORNIA

PB AMERICAS, Inc.
A Parsons Brinckerhoff Company
303 Second St., Suite 700N
San Francisco, CA 94107-1317

The State of California or its officers or agents shall not be responsible for the accuracy or completeness of electronic copies of this plan sheet.

Caltrans now has a web site! To get to the web site, go to http://www.dot.ca.gov

REQUEST FOR INFORMATION NOT ADDRESSED IN THIS CCO REMAIN IN FORCE

MARK	DATE	DESCRIPTIONS	BY	CH'D	CCO#
		REVISIONS			
0	03/08/10	MEP INTEGRATION	SYC	FW	110

CONTRACT CHANGE ORDER NO._____
SHEET_____ OF _____

Conduit/Tray No:	4881	Reference:	E-641
Size:	78	Type:	RGS-PVC coated conduit
From:	1T40	To:	PB-2B
Total Fill (mm2):	30.19	Remarks:	Installed in Skyway contract.
Allowable Fill (mm2):	2564.19		
Description of Changes:			

Included Cable No.	Conductor Type	Area (mm2)
1475-4D	12 Fiber, single mode fiber optic cable	30.19
Pull Rope	Soft-Fiber Polyester	0.00

Conduit/Tray No:	4888	Reference:	E-641
Size:	78	Type:	RGS-PVC coated conduit
From:	1T40	To:	Tel. Terminal Box #TEL-12W
Total Fill (mm2):	1201.71	Remarks:	Installed in Skyway contract.
Allowable Fill (mm2):	2564.19		
Description of Changes:			

Included Cable No.	Conductor Type	Area (mm2)
1473-13	50 pair #18, shielded pairs, IS/OS shield 600 V, XLPE insul., PVC jacket	1201.71
Pull Rope	Soft-Fiber Polyester	0.00

EXISTING
CONDUIT AND TRAY SCHEDULE

E-1016

REVISED BY	DATE REVISED
DATE 01/10	01/10
SYC	FW
CALCULATED/ DESIGNED BY	CHECKED BY

DESIGN OVERSIGHT
BEHZAD GOLEMOHAMMADI

STATE OF CALIFORNIA - DEPARTMENT OF TRANSPORTATION
Caltrans

DATE PLOTTED => 25-MAY-2010
TIME PLOTTED => 13:44

LAST REVISION 00-00-00

FOR REDUCED PLANS ORIGINAL SCALE IS IN MILLIMETERS 0 20 40 60 80

DGN FILE =>04-0120f1_E-1016.dgn
USERNAME =>llorico

CU 04251

EA 0120F1

DIST	COUNTY	ROUTE	KILOMETER POST TOTAL PROJECT	SHEET No	TOTAL SHEETS
04	SF, Ala	80	12.2/14.3 0.0/4.0	407a 10S18	1204

Syn Yee Chin 03/08/10
REGISTERED ELECTRICAL ENGINEER DATE

05-06-2010
PLANS APPROVAL DATE

REGISTERED PROFESSIONAL ENGINEER
SYN YEE CHIN
No. 18186
Exp. 09/30/2011
ELECTRICAL
STATE OF CALIFORNIA

PB AMERICAS, Inc.
A Parsons Brinckerhoff Company
303 Second St., Suite 700N
San Francisco, CA 94107-1317

The State of California or its officers or agents shall not be responsible for the accuracy or completeness of electronic copies of this plan sheet.

Caltrans now has a web site! To get to the web site, go to http://www.dot.ca.gov

REQUEST FOR INFORMATION NOT ADDRESSED IN THIS CCO REMAIN IN FORCE

MARK	DATE	REVISIONS	BY	CH'D	CCO#
0	03/08/10	MEP INTEGRATION	SYC	FW	110

CONTRACT CHANGE ORDER NO._____
SHEET_____ OF _____

DATE	REVISED BY	CALCULATED/ DESIGNED BY	CHECKED BY
01/10	DATE REVISED	SYC	FW

DESIGN OVERSIGHT
BEHZAD GOLEMOHAMMADI

STATE OF CALIFORNIA - DEPARTMENT OF TRANSPORTATION
Caltrans

Conduit/Tray No: 4889 Reference: E-641
Size: 78 Type: RGS-PVC coated conduit
From: 1T40 To: Tel. Terminal Box #TEL-12W
Total Fill (mm2): 1201.71 Remarks: Installed in Skyway contract.
Allowable Fill (mm2): 2564.19
Description of Changes:

Included Cable No.	Conductor Type	Area (mm2)
1473-14	50 pair #18, shielded pairs, IS/OS shield 600 V, XLPE insul., PVC jacket	1201.71
Pull Rope	Soft-Fiber Polyester	0.00

Conduit/Tray No: 4892 Reference: E-643
Size: 78 Type: RGS-PVC coated conduit
From: 1T41 (on Skyway) To: PB-2B
Total Fill (mm2): 30.19 Remarks: Installed in Skyway contract.
Allowable Fill (mm2): 2564.19
Description of Changes:

Included Cable No.	Conductor Type	Area (mm2)
1475-4E	12 Fiber, single mode fiber optic cable	30.19
Pull Rope	Soft-Fiber Polyester	0.00

Conduit/Tray No: 4898 Reference: E-643
Size: 78 Type: RGS-PVC coated conduit
From: 1T41 (on Skyway) To: Tel. Terminal Box #TEL-13W
Total Fill (mm2): 1201.71 Remarks: Installed in Skyway contract.
Allowable Fill (mm2): 2564.19
Description of Changes:

Included Cable No.	Conductor Type	Area (mm2)
1473-14	50 pair #18, shielded pairs, IS/OS shield 600 V, XLPE insul., PVC jacket	1201.71
Pull Rope	Soft-Fiber Polyester	0.00

Conduit/Tray No: 4899 Reference: E-643
Size: 78 Type: RGS-PVC coated conduit
From: 1T41 To: Tel. Terminal Box #TEL-13W
Total Fill (mm2): 1201.71 Remarks: Installed in Skyway contract.
Allowable Fill (mm2): 2564.19
Description of Changes:

Included Cable No.	Conductor Type	Area (mm2)
1473-23	50 pair #18, shielded pairs, IS/OS shield 600 V, XLPE insul., PVC jacket	1201.71
Pull Rope	Soft-Fiber Polyester	0.00

Conduit/Tray No: 4908 Reference: E-645
Size: 78 Type: RGS-PVC coated conduit
From: 1T41 (on Skyway) To: Tel. Terminal Box #TEL-14W
Total Fill (mm2): 1201.71 Remarks: Installed in Skyway contract.
Allowable Fill (mm2): 2564.19
Description of Changes:

Included Cable No.	Conductor Type	Area (mm2)
1473-15	50 pair #18, shielded pairs, IS/OS shield 600 V, XLPE insul., PVC jacket	1201.71
Pull Rope	Soft-Fiber Polyester	0.00

Conduit/Tray No: 4909 Reference: E-645
Size: 78 Type: RGS-PVC coated conduit
From: 1T41 (on Skyway) To: Tel. Terminal Box #TEL-14W
Total Fill (mm2): 1201.71 Remarks: Installed in Skyway contract.
Allowable Fill (mm2): 2564.19
Description of Changes:

Included Cable No.	Conductor Type	Area (mm2)
1473-16	50 pair #18, shielded pairs, IS/OS shield 600 V, XLPE insul., PVC jacket	1201.71
Pull Rope	Soft-Fiber Polyester	0.00

EXISTING
CONDUIT AND TRAY SCHEDULE

THIS PLAN ACCURATE FOR ELECTRICAL WORK ONLY.

E-1017

LAST REVISION 00-00-00
DATE PLOTTED => 25-MAY-2010
TIME PLOTTED => 13:44

FOR REDUCED PLANS ORIGINAL SCALE IS IN MILLIMETERS 0 20 40 60 80

DGN FILE =>04-0120f1_E-1017.dgn
USERNAME =>llorico

CU 04251 EA 0120F1

Conduit/Tray No:	4912	Reference:	E-646
Size:	78	Type:	RGS-PVC coated conduit
From:	1T41 (on Skyway)	To:	PB-2B
Total Fill (mm2):	30.19	Remarks:	Installed in Skyway contract.
Allowable Fill (mm2):	2564.19		
Description of Changes:			

Included Cable No.	Conductor Type	Area (mm2)
1475-4F	12 Fiber, single mode fiber optic cable	30.19
Pull Rope	Soft-Fiber Polyester	0.00

Conduit/Tray No:	4918	Reference:	E-646
Size:	78	Type:	RGS-PVC coated conduit
From:	1T41 (on Skyway)	To:	Tel. Terminal Box #TEL-15W
Total Fill (mm2):	1201.71	Remarks:	Installed in Skyway contract.
Allowable Fill (mm2):	2564.19		
Description of Changes:			

Included Cable No.	Conductor Type	Area (mm2)
1473-16	50 pair #18, shielded pairs, IS/OS shield 600 V, XLPE insul., PVC jacket	1201.71
Pull Rope	Soft-Fiber Polyester	0.00

Conduit/Tray No:	4919	Reference:	E-646
Size:	78	Type:	RGS-PVC coated conduit
From:	1T41 (on Skyway)	To:	Tel. Terminal Box #TEL-15W
Total Fill (mm2):	1201.71	Remarks:	Installed in Skyway contract.
Allowable Fill (mm2):	2564.19		
Description of Changes:			

Included Cable No.	Conductor Type	Area (mm2)
1473-17	50 pair #18, shielded pairs, IS/OS shield 600 V, XLPE insul., PVC jacket	1201.71
Pull Rope	Soft-Fiber Polyester	0.00

Conduit/Tray No:	4922	Reference:	E-647
Size:	78	Type:	RGS-PVC coated conduit
From:	1T41 (on Skyway)	To:	PB-2B
Total Fill (mm2):	30.19	Remarks:	Installed in Skyway contract.
Allowable Fill (mm2):	2564.19		
Description of Changes:			

Included Cable No.	Conductor Type	Area (mm2)
1475-4G	12 Fiber, single mode fiber optic cable	30.19
Pull Rope	Soft-Fiber Polyester	0.00

THIS PLAN ACCURATE FOR ELECTRICAL WORK ONLY.

REVISED BY | DATE REVISED
DATE 01/10 | 01/10
SYC | FW
CALCULATED/ DESIGNED BY | CHECKED BY
DESIGN OVERSIGHT: BEHZAD GOLEMOHAMMADI
STATE OF CALIFORNIA - DEPARTMENT OF TRANSPORTATION
Caltrans

Caltrans Metric

DIST	COUNTY	ROUTE	KILOMETER POST TOTAL PROJECT	SHEET No	TOTAL SHEETS
04	SF, Ala	80	12.2/14.3 0.0/4.0	407a 10S19	1204

Syn Yee Chin 03/08/10
REGISTERED ELECTRICAL ENGINEER DATE

05-06-2010
PLANS APPROVAL DATE

REGISTERED PROFESSIONAL ENGINEER — SYN YEE CHIN No. 18186 Exp. 09/30/2011 ELECTRICAL — STATE OF CALIFORNIA

PB AMERICAS, Inc.
A Parsons Brinckerhoff Company
303 Second St., Suite 700N
San Francisco, CA 94107-1317

The State of California or its officers or agents shall not be responsible for the accuracy or completeness of electronic copies of this plan sheet.

Caltrans now has a web site! To get to the web site, go to http://www.dot.ca.gov

REQUEST FOR INFORMATION NOT ADDRESSED IN THIS CCO REMAIN IN FORCE

MARK	DATE	DESCRIPTIONS	BY	CH'D	CCO#
		REVISIONS			
0	03/08/10	MEP INTEGRATION	SYC	FW	110

CONTRACT CHANGE ORDER NO. _____
SHEET _____ OF _____

Conduit/Tray No:	4928	Reference:	E-647
Size:	78	Type:	RGS-PVC coated conduit
From:	1T41 (on Skyway)	To:	Tel. Terminal Box #TEL-16W
Total Fill (mm2):	1201.71	Remarks:	Installed in Skyway contract.
Allowable Fill (mm2):	2564.19		
Description of Changes:			

Included Cable No.	Conductor Type	Area (mm2)
1473-17	50 pair #18, shielded pairs, IS/OS shield 600 V, XLPE insul., PVC jacket	1201.71
Pull Rope	Soft-Fiber Polyester	0.00

Conduit/Tray No:	4929	Reference:	E-647
Size:	78	Type:	RGS-PVC coated conduit
From:	1T41 (on Skyway)	To:	Tel. Terminal Box #TEL-16W
Total Fill (mm2):	1201.71	Remarks:	Installed in Skyway contract.
Allowable Fill (mm2):	2564.19		
Description of Changes:			

Included Cable No.	Conductor Type	Area (mm2)
1473-18	50 pair #18, shielded pairs, IS/OS shield 600 V, XLPE insul., PVC jacket	1201.71
Pull Rope	Soft-Fiber Polyester	0.00

EXISTING
CONDUIT AND TRAY SCHEDULE

E-1018

LAST REVISION 00-00-00
DATE PLOTTED => 25-MAY-2010
TIME PLOTTED => 13:44

FOR REDUCED PLANS ORIGINAL SCALE IS IN MILLIMETERS 0 20 40 60 80
DGN FILE =>04-0120f1_E-1018.dgn
USERNAME =>llorico
CU 04251
EA 0120F1

DIST	COUNTY	ROUTE	KILOMETER POST TOTAL PROJECT	SHEET No	TOTAL SHEETS
04	SF, Ala	80	12.2/14.3 0.0/4.0	407a 10S20	1204

Syn Yee Chin 03/08/10
REGISTERED ELECTRICAL ENGINEER DATE

05-06-2010
PLANS APPROVAL DATE

REGISTERED PROFESSIONAL ENGINEER
SYN YEE CHIN
No. 18186
Exp. 09/30/2011
ELECTRICAL
STATE OF CALIFORNIA

PB AMERICAS, Inc.
A Parsons Brinckerhoff Company
303 Second St., Suite 700N
San Francisco, CA 94107-1317

The State of California or its officers or agents shall not be responsible for the accuracy or completeness of electronic copies of this plan sheet.

Caltrans now has a web site! To get to the web site, go to http://www.dot.ca.gov

REQUEST FOR INFORMATION NOT ADDRESSED IN THIS CCO REMAIN IN FORCE

MARK	DATE	DESCRIPTIONS	BY	CH'D	CCO#
		REVISIONS			
0	03/08/10	MEP INTEGRATION	SYC	FW	110

CONTRACT CHANGE ORDER NO._____
SHEET _____ OF _____

Conduit/Tray No:	4931	Reference:	E-649
Size:	78	Type:	RGS-PVC coated conduit
From:	1T42	To:	PB-2B
Total Fill (mm2):	30.19	Remarks:	Installed in Skyway contract.
Allowable Fill (mm2):	2564.19		
Description of Changes:			

Included Cable No.	Conductor Type	Area (mm2)
1475-4H	12 Fiber, single mode fiber optic cable	30.19
Pull Rope	Soft-Fiber Polyester	0.00

Conduit/Tray No:	4938	Reference:	E-649
Size:	78	Type:	RGS-PVC coated conduit
From:	1T42	To:	Tel. Terminal Box #TEL-17W
Total Fill (mm2):	1201.71	Remarks:	Installed in Skyway contract.
Allowable Fill (mm2):	2564.19		
Description of Changes:			

Included Cable No.	Conductor Type	Area (mm2)
1473-18	50 pair #18, shielded pairs, IS/OS shield 600 V, XLPE insul., PVC jacket	1201.71
Pull Rope	Soft-Fiber Polyester	0.00

Conduit/Tray No:	4939	Reference:	E-649
Size:	78	Type:	RGS-PVC coated conduit
From:	1T42	To:	Tel. Terminal Box #TEL-17W
Total Fill (mm2):	1201.71	Remarks:	Installed in Skyway contract.
Allowable Fill (mm2):	2564.19		
Description of Changes:			

Included Cable No.	Conductor Type	Area (mm2)
1473-19	50 pair #18, shielded pairs, IS/OS shield 600 V, XLPE insul., PVC jacket	1201.71
Pull Rope	Soft-Fiber Polyester	0.00

Conduit/Tray No:	4942	Reference:	E-650
Size:	78	Type:	RGS-PVC coated conduit
From:	1T42	To:	PB-2B
Total Fill (mm2):	60.38	Remarks:	Installed in Skyway contract.
Allowable Fill (mm2):	1499.81		
Description of Changes:			

Included Cable No.	Conductor Type	Area (mm2)
1475-4I1	12 Fiber, single mode fiber optic cable	30.19
1475-4I2	12 Fiber, single mode fiber optic cable	30.19
Pull Rope	Soft-Fiber Polyester	0.00

Conduit/Tray No:	4948	Reference:	E-650
Size:	78	Type:	RGS-PVC coated conduit
From:	1T42	To:	Tel. Terminal Box #TEL-18W
Total Fill (mm2):	1201.71	Remarks:	Installed in Skyway contract.
Allowable Fill (mm2):	2564.19		
Description of Changes:			

Included Cable No.	Conductor Type	Area (mm2)
1473-19	50 pair #18, shielded pairs, IS/OS shield 600 V, XLPE insul., PVC jacket	1201.71
Pull Rope	Soft-Fiber Polyester	0.00

Conduit/Tray No:	4949	Reference:	E-650
Size:	78	Type:	RGS-PVC coated conduit
From:	1T42	To:	Tel. Terminal Box #TEL-18W
Total Fill (mm2):	1201.71	Remarks:	Installed in Skyway contract.
Allowable Fill (mm2):	2564.19		
Description of Changes:			

Included Cable No.	Conductor Type	Area (mm2)
1473-20	50 pair #18, shielded pairs, IS/OS shield 600 V, XLPE insul., PVC jacket	1201.71
Pull Rope	Soft-Fiber Polyester	0.00

EXISTING
CONDUIT AND TRAY SCHEDULE

THIS PLAN ACCURATE FOR ELECTRICAL WORK ONLY.

DATE	BY	REVISED BY
0/10	FW	DATE REVISED

CALCULATED/DESIGNED BY
CHECKED BY

DESIGN OVERSIGHT
BEHZAD GOLEMOHAMMADI

STATE OF CALIFORNIA - DEPARTMENT OF TRANSPORTATION
Caltrans

DATE PLOTTED => 25-MAY-2010
TIME PLOTTED => 13:44

LAST REVISION 00-00-00

E-1019

FOR REDUCED PLANS ORIGINAL SCALE IS IN MILLIMETERS 0 20 40 60 80

DGN FILE =>04-0120f1_E-1019.dgn
USERNAME =>llorico

CU 04251 EA 0120F1

DIST	COUNTY	ROUTE	KILOMETER POST TOTAL PROJECT	SHEET No	TOTAL SHEETS
04	SF, Ala	80	12.2/14.3 0.0/4.0	407a 10S21	1204

Caltrans Metric

Syn Yee Chin 03/08/10
REGISTERED ELECTRICAL ENGINEER DATE

05-06-2010
PLANS APPROVAL DATE

REGISTERED PROFESSIONAL ENGINEER — SYN YEE CHIN No. 18186 Exp. 09/30/2011 ELECTRICAL — STATE OF CALIFORNIA

PB AMERICAS, Inc.
A Parsons Brinckerhoff Company
303 Second St., Suite 700N
San Francisco, CA 94107-1317

The State of California or its officers or agents shall not be responsible for the accuracy or completeness of electronic copies of this plan sheet.

Caltrans now has a web site! To get to the web site, go to http://www.dot.ca.gov

REQUEST FOR INFORMATION NOT ADDRESSED IN THIS CCO REMAIN IN FORCE

MARK	DATE	REVISIONS DESCRIPTIONS	BY	CH'D	CCO#
0	03/08/10	MEP INTEGRATION	SYC	FW	110

CONTRACT CHANGE ORDER NO. _____
SHEET _____ OF _____

Conduit/Tray No:	4958	Reference:	E-651
Size:	78	Type:	RGS-PVC coated conduit
From:	1T42	To:	Tel. Terminal Box #TEL-19W
Total Fill (mm2):	1201.71	Remarks:	Installed in Skyway contract.
Allowable Fill (mm2):	2564.19		
Description of Changes:			

Included Cable No.	Conductor Type	Area (mm2)
1473-20	50 pair #18, shielded pairs, IS/OS shield 600 V, XLPE insul., PVC jacket	1201.71
Pull Rope	Soft-Fiber Polyester	0.00

Conduit/Tray No:	4959	Reference:	E-651
Size:	78	Type:	RGS-PVC coated conduit
From:	1T42	To:	Tel. Terminal Box #TEL-19W
Total Fill (mm2):	1201.71	Remarks:	Installed in Skyway contract.
Allowable Fill (mm2):	2564.19		
Description of Changes:			

Included Cable No.	Conductor Type	Area (mm2)
1473-21	50 pair #18, shielded pairs, IS/OS shield 600 V, XLPE insul., PVC jacket	1201.71
Pull Rope	Soft-Fiber Polyester	0.00

Conduit/Tray No:	4962	Reference:	E-652
Size:	78	Type:	RGS-PVC coated conduit
From:	1T42	To:	PB-2B
Total Fill (mm2):	30.19	Remarks:	Installed in Skyway contract.
Allowable Fill (mm2):	2564.19		
Description of Changes:			

Included Cable No.	Conductor Type	Area (mm2)
1475-4J	12 Fiber, single mode fiber optic cable	30.19
Pull Rope	Soft-Fiber Polyester	0.00

Conduit/Tray No:	4968	Reference:	E-652
Size:	78	Type:	RGS-PVC coated conduit
From:	1T42	To:	Tel. Terminal Box #TEL-20W
Total Fill (mm2):	1201.71	Remarks:	Installed in Skyway contract.
Allowable Fill (mm2):	2564.19		
Description of Changes:			

Included Cable No.	Conductor Type	Area (mm2)
1473-21	50 pair #18, shielded pairs, IS/OS shield 600 V, XLPE insul., PVC jacket	1201.71
Pull Rope	Soft-Fiber Polyester	0.00

Conduit/Tray No:	4969	Reference:	E-652
Size:	78	Type:	RGS-PVC coated conduit
From:	1T42	To:	Tel. Terminal Box #TEL-20W
Total Fill (mm2):	1201.71	Remarks:	Installed in Skyway contract.
Allowable Fill (mm2):	2564.19		
Description of Changes:			

Included Cable No.	Conductor Type	Area (mm2)
1473-22	50 pair #18, shielded pairs, IS/OS shield 600 V, XLPE insul., PVC jacket	1201.71
Pull Rope	Soft-Fiber Polyester	0.00

Conduit/Tray No:	4972	Reference:	E-654
Size:	78	Type:	RGS-PVC coated conduit
From:	1T43 (on Skyway)	To:	PB-2B
Total Fill (mm2):	30.19	Remarks:	Installed in Skyway contract.
Allowable Fill (mm2):	2564.19		
Description of Changes:			

Included Cable No.	Conductor Type	Area (mm2)
1475-4K	12 Fiber, single mode fiber optic cable	30.19
Pull Rope	Soft-Fiber Polyester	0.00

EXISTING
CONDUIT AND TRAY SCHEDULE

E-1020

DESIGN OVERSIGHT	CALCULATED/ DESIGNED BY	DATE	REVISED BY	DATE REVISED
BEHZAD GOLEMOHAMMADI	CHECKED BY	01/10	FW	01/10

STATE OF CALIFORNIA - DEPARTMENT OF TRANSPORTATION
Caltrans

THIS PLAN ACCURATE FOR ELECTRICAL WORK ONLY.

FOR REDUCED PLANS ORIGINAL SCALE IS IN MILLIMETERS 0 20 40 60 80

DGN FILE =>04-0120f1_E-1020.dgn
USERNAME =>llorico

CU 04251

EA 0120F1

DATE PLOTTED => 25-MAY-2010
TIME PLOTTED => 13:45

LAST REVISION 00-00-00

DIST	COUNTY	ROUTE	KILOMETER POST TOTAL PROJECT	SHEET No	TOTAL SHEETS
04	SF, Ala	80	12.2/14.3 0.0/4.0	407a 10S22	1204

Caltrans Metric

Syn Yee Chin 03/08/10
REGISTERED ELECTRICAL ENGINEER DATE

05-06-2010
PLANS APPROVAL DATE

REGISTERED PROFESSIONAL ENGINEER — SYN YEE CHIN No. 18186 Exp. 09/30/2011 ELECTRICAL — STATE OF CALIFORNIA

PB AMERICAS, Inc.
A Parsons Brinckerhoff Company
303 Second St., Suite 700N
San Francisco, CA 94107-1317

The State of California or its officers or agents shall not be responsible for the accuracy or completeness of electronic copies of this plan sheet.

Caltrans now has a web site! To get to the web site, go to http://www.dot.ca.gov

REQUEST FOR INFORMATION NOT ADDRESSED IN THIS CCO REMAIN IN FORCE

MARK	DATE	REVISIONS DESCRIPTIONS	BY	CH'D	CCO#
0	03/08/10	MEP INTEGRATION	SYC	FW	110

CONTRACT CHANGE ORDER NO. _____
SHEET _____ OF _____

Conduit/Tray No:	4978	Reference:	E-654
Size:	78	Type:	RGS-PVC coated conduit
From:	1T43 (on Skyway)	To:	Tel. Terminal Box #TEL-21W
Total Fill (mm2):	1201.71	Remarks:	Installed in Skyway contract.
Allowable Fill (mm2):	2564.19		
Description of Changes:			

Included Cable No.	Conductor Type	Area (mm2)
1473-22	50 pair #18, shielded pairs, IS/OS shield 600 V, XLPE insul., PVC jacket	1201.71
Pull Rope	Soft-Fiber Polyester	0.00

Conduit/Tray No:	5011	Reference:	E-820
Size:	41	Type:	RGS-PVC coated conduit
From:	PB-2B	To:	Controller Cabinet #TOS-09EA
Total Fill (mm2):	30.19	Remarks:	Installed in Skyway contract.
Allowable Fill (mm2):	702.80		
Description of Changes:			

Included Cable No.	Conductor Type	Area (mm2)
2475-4A	12 Fiber, single mode fiber optic cable	30.19
Pull Rope	Soft-Fiber Polyester	0.00

Conduit/Tray No:	5031	Reference:	E-821
Size:	41	Type:	RGS-PVC coated conduit
From:	PB-2B	To:	Controller Cabinet #TOS-10EA
Total Fill (mm2):	30.19	Remarks:	Installed in Skyway contract.
Allowable Fill (mm2):	702.80		
Description of Changes:			

Included Cable No.	Conductor Type	Area (mm2)
2475-4B	12 Fiber, single mode fiber optic cable	30.19
Pull Rope	Soft-Fiber Polyester	0.00

Conduit/Tray No:	5051	Reference:	E-822
Size:	41	Type:	RGS-PVC coated conduit
From:	PB-2B	To:	Controller Cabinet #TOS-11EA
Total Fill (mm2):	30.19	Remarks:	Installed in Skyway contract.
Allowable Fill (mm2):	702.80		
Description of Changes:			

Included Cable No.	Conductor Type	Area (mm2)
2475-4C	12 Fiber, single mode fiber optic cable	30.19
Pull Rope	Soft-Fiber Polyester	0.00

Conduit/Tray No:	5097	Reference:	E-824
Size:	27	Type:	RGS-PVC coated conduit
From:	Junction Box	To:	Controller Cabinet #TOS-13EB
Total Fill (mm2):	60.38	Remarks:	Installed in Skyway contract.
Allowable Fill (mm2):	177.49		
Description of Changes:			

Included Cable No.	Conductor Type	Area (mm2)
2475-4F1	12 Fiber, single mode fiber optic cable	30.19
2475-4F2	12 Fiber, single mode fiber optic cable	30.19
Pull Rope	Soft-Fiber Polyester	0.00

Conduit/Tray No:	5098	Reference:	E-824
Size:	41	Type:	RGS-PVC coated conduit
From:	PB-2B	To:	Junction Box
Total Fill (mm2):	90.57	Remarks:	Installed in Skyway contract.
Allowable Fill (mm2):	534.55		
Description of Changes:			

Included Cable No.	Conductor Type	Area (mm2)
2475-4E	12 Fiber, single mode fiber optic cable	30.19
2475-4F1	12 Fiber, single mode fiber optic cable	30.19
2475-4F2	12 Fiber, single mode fiber optic cable	30.19
Pull Rope	Soft-Fiber Polyester	0.00

EXISTING
CONDUIT AND TRAY SCHEDULE

E-1021

THIS PLAN ACCURATE FOR ELECTRICAL WORK ONLY.

REVISED BY	DATE REVISED
SYC	01/10
FW	

CALCULATED/DESIGNED BY
CHECKED BY

DESIGN OVERSIGHT
BEHZAD GOLEMOHAMMADI

STATE OF CALIFORNIA - DEPARTMENT OF TRANSPORTATION
Caltrans

DATE PLOTTED => 25-MAY-2010
TIME PLOTTED => 13:45

LAST REVISION 00-00-00

FOR REDUCED PLANS ORIGINAL SCALE IS IN MILLIMETERS 0 20 40 60 80

DGN FILE =>04-0120f1_E-1021.dgn
USERNAME =>llorico

CU 04251

EA 0120F1

DIST	COUNTY	ROUTE	KILOMETER POST TOTAL PROJECT		SHEET No	TOTAL SHEETS	
04	SF, Ala	80	12.2/14.3 0.0/4.0		407a 10S23	1204	

REQUEST FOR INFORMATION NOT ADDRESSED IN THIS CCO REMAIN IN FORCE

MARK	DATE	DESCRIPTIONS	BY	CH'D	CCO#
		REVISIONS			
0	03/08/10	MEP INTEGRATION	SYC	FW	110

CONTRACT CHANGE ORDER NO._____
SHEET _____ OF _____

Caltrans Metric

Syn Yee Chin 03/08/10
REGISTERED ELECTRICAL ENGINEER DATE

05-06-2010
PLANS APPROVAL DATE

REGISTERED PROFESSIONAL ENGINEER
SYN YEE CHIN
No. 18186
Exp. 09/30/2011
ELECTRICAL
STATE OF CALIFORNIA

PB AMERICAS, Inc.
A Parsons Brinckerhoff Company
303 Second St., Suite 700N
San Francisco, CA 94107-1317

The State of California or its officers or agents shall not be responsible for the accuracy or completeness of electronic copies of this plan sheet.

Caltrans now has a web site! To get to the web site, go to http://www.dot.ca.gov

Conduit/Tray No:	5105	Reference:	E-824
Size:	27	Type:	RGS-PVC coated conduit
From:	Junction Box	To:	Controller Cabinet #TOS-13EA
Total Fill (mm2):	30.19	Remarks:	Installed in Skyway contract.
Allowable Fill (mm2):	303.46		
Description of Changes:			

Included Cable No.	Conductor Type	Area (mm2)
2475-4E	12 Fiber, single mode fiber optic cable	30.19
Pull Rope	Soft-Fiber Polyester	0.00

Conduit/Tray No:	5146	Reference:	E-828
Size:	41	Type:	RGS-PVC coated conduit
From:	PB-2B	To:	Controller Cabinet #TOS-15EA
Total Fill (mm2):	30.19	Remarks:	Installed in Skyway contract.
Allowable Fill (mm2):	702.80		
Description of Changes:			

Included Cable No.	Conductor Type	Area (mm2)
2475-4G	12 Fiber, single mode fiber optic cable	30.19
Pull Rope	Soft-Fiber Polyester	0.00

Conduit/Tray No:	5166	Reference:	E-829
Size:	41	Type:	RGS-PVC coated conduit
From:	PB-2B	To:	Controller Cabinet #TOS-16EA
Total Fill (mm2):	30.19	Remarks:	Installed in Skyway contract.
Allowable Fill (mm2):	702.80		
Description of Changes:			

Included Cable No.	Conductor Type	Area (mm2)
2475-4H	12 Fiber, single mode fiber optic cable	30.19
Pull Rope	Soft-Fiber Polyester	0.00

Conduit/Tray No:	5191	Reference:	E-830
Size:	41	Type:	RGS-PVC coated conduit
From:	PB-2B	To:	Controller Cabinet #TOS-17EA
Total Fill (mm2):	30.19	Remarks:	Installed in Skyway contract.
Allowable Fill (mm2):	702.80		
Description of Changes:			

Included Cable No.	Conductor Type	Area (mm2)
2475-4I	12 Fiber, single mode fiber optic cable	30.19
Pull Rope	Soft-Fiber Polyester	0.00

Conduit/Tray No:	5211	Reference:	E-831
Size:	41	Type:	RGS-PVC coated conduit
From:	PB-2B	To:	Controller Cabinet #TOS-18EA
Total Fill (mm2):	30.19	Remarks:	Installed in Skyway contract.
Allowable Fill (mm2):	702.80		
Description of Changes:			

Included Cable No.	Conductor Type	Area (mm2)
2475-4J	12 Fiber, single mode fiber optic cable	30.19
Pull Rope	Soft-Fiber Polyester	0.00

Conduit/Tray No:	5251	Reference:	E-833
Size:	41	Type:	RGS-PVC coated conduit
From:	PB-2B	To:	Controller Cabinet #TOS-20EA
Total Fill (mm2):	30.19	Remarks:	Installed in Skyway contract.
Allowable Fill (mm2):	702.80		
Description of Changes:			

Included Cable No.	Conductor Type	Area (mm2)
2475-4K	12 Fiber, single mode fiber optic cable	30.19
Pull Rope	Soft-Fiber Polyester	0.00

Conduit/Tray No:	5276	Reference:	E-834
Size:	41	Type:	RGS-PVC coated conduit
From:	PB-2B	To:	Controller Cabinet #TOS-21EA
Total Fill (mm2):	30.19	Remarks:	Installed in Skyway contract.
Allowable Fill (mm2):	702.80		
Description of Changes:			

Included Cable No.	Conductor Type	Area (mm2)
2475-4L	12 Fiber, single mode fiber optic cable	30.19
Pull Rope	Soft-Fiber Polyester	0.00

EXISTING
CONDUIT AND TRAY SCHEDULE

E-1022

REVISED BY	DATE REVISED
SYC	01/10
FW	01/10

CALCULATED/DESIGNED BY
CHECKED BY

DESIGN OVERSIGHT
BEHZAD GOLEMOHAMMADI

STATE OF CALIFORNIA - DEPARTMENT OF TRANSPORTATION
Caltrans

THIS PLAN ACCURATE FOR ELECTRICAL WORK ONLY.

FOR REDUCED PLANS ORIGINAL SCALE IS IN MILLIMETERS 0 20 40 60 80

DGN FILE =>04-0120f1_E-1022.dgn
USERNAME =>llorico

CU 04251

EA 0120F1

LAST REVISION 00-00-00
DATE PLOTTED => 25-MAY-2010
TIME PLOTTED => 13:45

DIST	COUNTY	ROUTE	KILOMETER POST TOTAL PROJECT	SHEET No	TOTAL SHEETS
04	SF, Ala	80	12.2/14.3 0.0/4.0	407a 10S24	1204

Caltrans Metric

Syn Yee Chin 03/08/10
REGISTERED ELECTRICAL ENGINEER DATE

REGISTERED PROFESSIONAL ENGINEER — SYN YEE CHIN No. 18186 Exp. 09/30/2011 ELECTRICAL — STATE OF CALIFORNIA

05-06-2010
PLANS APPROVAL DATE

PB AMERICAS, Inc.
A Parsons Brinckerhoff Company
303 Second St., Suite 700N
San Francisco, CA 94107-1317

The State of California or its officers or agents shall not be responsible for the accuracy or completeness of electronic copies of this plan sheet.

Caltrans now has a web site! To get to the web site, go to http://www.dot.ca.gov

REQUEST FOR INFORMATION NOT ADDRESSED IN THIS CCO REMAIN IN FORCE

MARK	DATE	DESCRIPTIONS	BY	CH'D	CCO#
		REVISIONS			
0	03/08/10	MEP INTEGRATION	SYC	FW	110

CONTRACT CHANGE ORDER NO._____
SHEET _____ OF _____

Conduit/Tray No:	5852
Size:	78
From:	2T40
Total Fill (mm2):	30.19
Allowable Fill (mm2):	2564.19
Description of Changes:	
Reference:	E-820
Type:	RGS-PVC coated conduit
To:	PB-2B
Remarks:	Installed in Skyway contract.

Included Cable No.	Conductor Type	Area (mm2)
2475-4A	12 Fiber, single mode fiber optic cable	30.19
Pull Rope	Soft-Fiber Polyester	0.00

Conduit/Tray No:	5859
Size:	78
From:	2T40
Total Fill (mm2):	1201.71
Allowable Fill (mm2):	2564.19
Description of Changes:	
Reference:	E-820
Type:	RGS-PVC coated conduit
To:	Tel. Terminal Box #TEL-09E
Remarks:	Installed in Skyway contract.

Included Cable No.	Conductor Type	Area (mm2)
2473-11	50 pair #18, shielded pairs, IS/OS shield 600 V, XLPE insul., PVC jacket	1201.71
Pull Rope	Soft-Fiber Polyester	0.00

Conduit/Tray No:	5862
Size:	78
From:	2T40
Total Fill (mm2):	30.19
Allowable Fill (mm2):	2564.19
Description of Changes:	
Reference:	E-821
Type:	RGS-PVC coated conduit
To:	PB-2B
Remarks:	Installed in Skyway contract.

Included Cable No.	Conductor Type	Area (mm2)
2475-4B	12 Fiber, single mode fiber optic cable	30.19
Pull Rope	Soft-Fiber Polyester	0.00

Conduit/Tray No:	5868
Size:	78
From:	2T40
Total Fill (mm2):	1201.71
Allowable Fill (mm2):	2564.19
Description of Changes:	
Reference:	E-821
Type:	RGS-PVC coated conduit
To:	Tel. Terminal Box #TEL-10E
Remarks:	Installed in Skyway contract.

Included Cable No.	Conductor Type	Area (mm2)
2473-11	50 pair #18, shielded pairs, IS/OS shield 600 V, XLPE insul., PVC jacket	1201.71
Pull Rope	Soft-Fiber Polyester	0.00

Conduit/Tray No:	5869
Size:	78
From:	2T40
Total Fill (mm2):	1201.71
Allowable Fill (mm2):	2564.19
Description of Changes:	
Reference:	E-821
Type:	RGS-PVC coated conduit
To:	Tel. Terminal Box #TEL-10E
Remarks:	Installed in Skyway contract.

Included Cable No.	Conductor Type	Area (mm2)
2473-12	50 pair #18, shielded pairs, IS/OS shield 600 V, XLPE insul., PVC jacket	1201.71
Pull Rope	Soft-Fiber Polyester	0.00

Conduit/Tray No:	5872
Size:	78
From:	2T40
Total Fill (mm2):	30.19
Allowable Fill (mm2):	2564.19
Description of Changes:	
Reference:	E-822
Type:	RGS-PVC coated conduit
To:	PB-2B
Remarks:	Installed in Skyway contract.

Included Cable No.	Conductor Type	Area (mm2)
2475-4C	12 Fiber, single mode fiber optic cable	30.19
Pull Rope	Soft-Fiber Polyester	0.00

EXISTING
CONDUIT AND TRAY SCHEDULE

E-1023

THIS PLAN ACCURATE FOR ELECTRICAL WORK ONLY.

DESIGN OVERSIGHT	CALCULATED/ DESIGNED BY	DRAWN BY	CHECKED BY
BEHZAD GOLEMOHAMMADI	SYC	FW	0/10

DATE	BY	REVISED
0/10		DATE REVISED

STATE OF CALIFORNIA - DEPARTMENT OF TRANSPORTATION
Caltrans

FOR REDUCED PLANS ORIGINAL SCALE IS IN MILLIMETERS 0 20 40 60 80

DGN FILE =>04-0120f1_E-1023.dgn
USERNAME =>llorico

CU 04251

EA 0120F1

DATE PLOTTED => 25-MAY-2010
TIME PLOTTED => 13:45

LAST REVISION 00-00-00

DIST	COUNTY	ROUTE	KILOMETER POST TOTAL PROJECT	SHEET No	TOTAL SHEETS
04	SF, Ala	80	12.2/14.3 0.0/4.0	407a 10S25	1204

Caltrans Metric

Syn Yee Chin 03/08/10
REGISTERED ELECTRICAL ENGINEER DATE

05-06-2010
PLANS APPROVAL DATE

REGISTERED PROFESSIONAL ENGINEER — SYN YEE CHIN No. 18186 Exp. 09/30/2011 ELECTRICAL — STATE OF CALIFORNIA

PB AMERICAS, Inc.
A Parsons Brinckerhoff Company
303 Second St., Suite 700N
San Francisco, CA 94107-1317

The State of California or its officers or agents shall not be responsible for the accuracy or completeness of electronic copies of this plan sheet.

Caltrans now has a web site! To get to the web site, go to http://www.dot.ca.gov

REQUEST FOR INFORMATION NOT ADDRESSED IN THIS CCO REMAIN IN FORCE

MARK	DATE	DESCRIPTIONS	BY	CH'D	CCO#
		REVISIONS			
0	03/08/10	MEP INTEGRATION	SYC	FW	110

CONTRACT CHANGE ORDER NO._____
SHEET _____ OF _____

Conduit/Tray No:	5878	Reference:	E-822
Size:	78	Type:	RGS-PVC coated conduit
From:	2T40	To:	Tel. Terminal Box #TEL-11E
Total Fill (mm2):	1201.71	Remarks:	Installed in Skyway contract.
Allowable Fill (mm2):	2564.19		
Description of Changes:			

Included Cable No.	Conductor Type	Area (mm2)
2473-12	50 pair #18, shielded pairs, IS/OS shield 600 V, XLPE insul., PVC jacket	1201.71
Pull Rope	Soft-Fiber Polyester	0.00

Conduit/Tray No:	5879	Reference:	E-822
Size:	78	Type:	RGS-PVC coated conduit
From:	2T40	To:	Tel. Terminal Box #TEL-11E
Total Fill (mm2):	1201.71	Remarks:	Installed in Skyway contract.
Allowable Fill (mm2):	2564.19		
Description of Changes:			

Included Cable No.	Conductor Type	Area (mm2)
2473-13	50 pair #18, shielded pairs, IS/OS shield 600 V, XLPE insul., PVC jacket	1201.71
Pull Rope	Soft-Fiber Polyester	0.00

Conduit/Tray No:	5882	Reference:	E-823
Size:	78	Type:	RGS-PVC coated conduit
From:	2T40	To:	Wireway #12E
Total Fill (mm2):	30.19	Remarks:	Installed in Skyway contract.
Allowable Fill (mm2):	2564.19		
Description of Changes:			

Included Cable No.	Conductor Type	Area (mm2)
2475-4D	12 Fiber, single mode fiber optic cable	30.19
Pull Rope	Soft-Fiber Polyester	0.00

Conduit/Tray No:	5888	Reference:	E-823
Size:	78	Type:	RGS-PVC coated conduit
From:	2T40	To:	Tel. Terminal Box #TEL-12E
Total Fill (mm2):	1201.71	Remarks:	Installed in Skyway contract.
Allowable Fill (mm2):	2564.19		
Description of Changes:			

Included Cable No.	Conductor Type	Area (mm2)
2473-13	50 pair #18, shielded pairs, IS/OS shield 600 V, XLPE insul., PVC jacket	1201.71
Pull Rope	Soft-Fiber Polyester	0.00

Conduit/Tray No:	5889	Reference:	E-823
Size:	78	Type:	RGS-PVC coated conduit
From:	2T40	To:	Tel. Terminal Box #TEL-12E
Total Fill (mm2):	1201.71	Remarks:	Installed in Skyway contract.
Allowable Fill (mm2):	2564.19		
Description of Changes:			

Included Cable No.	Conductor Type	Area (mm2)
2473-14	50 pair #18, shielded pairs, IS/OS shield 600 V, XLPE insul., PVC jacket	1201.71
Pull Rope	Soft-Fiber Polyester	0.00

Conduit/Tray No:	5891	Reference:	E-824
Size:	78	Type:	RGS-PVC coated conduit
From:	2T41 (on Skyway)	To:	PB-2B
Total Fill (mm2):	90.57	Remarks:	Installed in Skyway contract.
Allowable Fill (mm2):	1935.24		
Description of Changes:			

Included Cable No.	Conductor Type	Area (mm2)
2475-4E	12 Fiber, single mode fiber optic cable	30.19
2475-4F1	12 Fiber, single mode fiber optic cable	30.19
2475-4F2	12 Fiber, single mode fiber optic cable	30.19
Pull Rope	Soft-Fiber Polyester	0.00

EXISTING
CONDUIT AND TRAY SCHEDULE

THIS PLAN ACCURATE FOR ELECTRICAL WORK ONLY.

DESIGN OVERSIGHT	CALCULATED/ DESIGNED BY	CHECKED BY	SYC	DATE 01/10	REVISED BY	DATE REVISED
BEHZAD GOLEMOHAMMADI	FW	01/10				

STATE OF CALIFORNIA - DEPARTMENT OF TRANSPORTATION
Caltrans

E-1024

LAST REVISION 00-00-00
DATE PLOTTED => 25-MAY-2010
TIME PLOTTED => 13:45

FOR REDUCED PLANS ORIGINAL SCALE IS IN MILLIMETERS 0 20 40 60 80

DGN FILE =>04-0120f1_E-1024.dgn
USERNAME =>llorico

CU 04251

EA 0120F1

Conduit/Tray No:	5898	Reference:	E-824
Size:	78	Type:	RGS-PVC coated conduit
From:	2T41 (on Skyway)	To:	Tel. Terminal Box #TEL-13E
Total Fill (mm2):	1201.71	Remarks:	Installed in Skyway contract.
Allowable Fill (mm2):	2564.19		
Description of Changes:			

Included Cable No.	Conductor Type	Area (mm2)
2473-14	50 pair #18, shielded pairs, IS/OS shield 600 V, XLPE insul., PVC jacket	1201.71
Pull Rope	Soft-Fiber Polyester	0.00

Conduit/Tray No:	5912	Reference:	E-828
Size:	78	Type:	RGS-PVC coated conduit
From:	2T41 (on Skyway)	To:	PB-2B
Total Fill (mm2):	30.19	Remarks:	Installed in Skyway contract.
Allowable Fill (mm2):	2564.19		
Description of Changes:			

Included Cable No.	Conductor Type	Area (mm2)
2475-4G	12 Fiber, single mode fiber optic cable	30.19
Pull Rope	Soft-Fiber Polyester	0.00

Conduit/Tray No:	5922	Reference:	E-829
Size:	78	Type:	RGS-PVC coated conduit
From:	2T41 (on Skyway)	To:	PB-2B
Total Fill (mm2):	30.19	Remarks:	Installed in Skyway contract.
Allowable Fill (mm2):	2564.19		
Description of Changes:			

Included Cable No.	Conductor Type	Area (mm2)
2475-4H	12 Fiber, single mode fiber optic cable	30.19
Pull Rope	Soft-Fiber Polyester	0.00

Conduit/Tray No:	5932	Reference:	E-830
Size:	78	Type:	RGS-PVC coated conduit
From:	2T42	To:	PB-2B
Total Fill (mm2):	30.19	Remarks:	Installed in Skyway contract.
Allowable Fill (mm2):	2564.19		
Description of Changes:			

Included Cable No.	Conductor Type	Area (mm2)
2475-4I	12 Fiber, single mode fiber optic cable	30.19
Pull Rope	Soft-Fiber Polyester	0.00

REQUEST FOR INFORMATION NOT ADDRESSED IN THIS CCO REMAIN IN FORCE

MARK	DATE	DESCRIPTIONS	BY	CH'D	CCO#
		REVISIONS			
0	03/08/10	MEP INTEGRATION	SYC	FW	110

CONTRACT CHANGE ORDER NO._____
SHEET _____ OF _____

Caltrans Metric

DIST	COUNTY	ROUTE	KILOMETER POST TOTAL PROJECT	SHEET No	TOTAL SHEETS
04	SF, Ala	80	12.2/14.3 0.0/4.0	407a 10S26	1204

Syn Yee Chin 03/08/10
REGISTERED ELECTRICAL ENGINEER DATE

05-06-2010
PLANS APPROVAL DATE

REGISTERED PROFESSIONAL ENGINEER
SYN YEE CHIN
No. 18186
Exp. 09/30/2011
ELECTRICAL
STATE OF CALIFORNIA

PB AMERICAS, Inc.
A Parsons Brinckerhoff Company
303 Second St., Suite 700N
San Francisco, CA 94107-1317

The State of California or its officers or agents shall not be responsible for the accuracy or completeness of electronic copies of this plan sheet.

Caltrans now has a web site! To get to the web site, go to http://www.dot.ca.gov

Conduit/Tray No:	5942	Reference:	E-831
Size:	78	Type:	RGS-PVC coated conduit
From:	2T42	To:	PB-2B
Total Fill (mm2):	30.19	Remarks:	Installed in Skyway contract.
Allowable Fill (mm2):	2564.19		
Description of Changes:			

Included Cable No.	Conductor Type	Area (mm2)
2475-4J	12 Fiber, single mode fiber optic cable	30.19
Pull Rope	Soft-Fiber Polyester	0.00

Conduit/Tray No:	5962	Reference:	E-833
Size:	78	Type:	RGS-PVC coated conduit
From:	2T42	To:	PB-2B
Total Fill (mm2):	30.19	Remarks:	Installed in Skyway contract.
Allowable Fill (mm2):	2564.19		
Description of Changes:			

Included Cable No.	Conductor Type	Area (mm2)
2475-4K	12 Fiber, single mode fiber optic cable	30.19
Pull Rope	Soft-Fiber Polyester	0.00

Conduit/Tray No:	5972	Reference:	E-834
Size:	78	Type:	RGS-PVC coated conduit
From:	2T43 (on Skyway)	To:	PB-2B
Total Fill (mm2):	30.19	Remarks:	Installed in Skyway contract.
Allowable Fill (mm2):	2564.19		
Description of Changes:			

Included Cable No.	Conductor Type	Area (mm2)
2475-4L	12 Fiber, single mode fiber optic cable	30.19
Pull Rope	Soft-Fiber Polyester	0.00

EXISTING
CONDUIT AND TRAY SCHEDULE

E-1025

DATE	REVISED BY
01/10	DATE REVISED

CALCULATED/ DESIGNED BY	SYC
CHECKED BY	FW

DESIGN OVERSIGHT
BEHZAD GOLEMOHAMMADI

STATE OF CALIFORNIA - DEPARTMENT OF TRANSPORTATION
Caltrans

THIS PLAN ACCURATE FOR ELECTRICAL WORK ONLY.

FOR REDUCED PLANS ORIGINAL SCALE IS IN MILLIMETERS 0 20 40 60 80

DGN FILE =>04-0120f1_E-1025.dgn
USERNAME =>llorico

CU 04251

EA 0120F1

LAST REVISION 00-00-00
DATE PLOTTED => 25-MAY-2010
TIME PLOTTED => 13:45

DIST	COUNTY	ROUTE	KILOMETER POST TOTAL PROJECT	SHEET No	TOTAL SHEETS
04	SF, Ala	80	12.2/14.3 0.0/4.0	407a 10S27	1204

Caltrans Metric

Syn Yee Chin 03/08/10
REGISTERED ELECTRICAL ENGINEER DATE

05-06-2010
PLANS APPROVAL DATE

REGISTERED PROFESSIONAL ENGINEER — SYN YEE CHIN No. 18186 Exp. 09/30/2011 ELECTRICAL — STATE OF CALIFORNIA

PB AMERICAS, Inc.
A Parsons Brinckerhoff Company
303 Second St., Suite 700N
San Francisco, CA 94107-1317

The State of California or its officers or agents shall not be responsible for the accuracy or completeness of electronic copies of this plan sheet.

Caltrans now has a web site! To get to the web site, go to http://www.dot.ca.gov

REQUEST FOR INFORMATION NOT ADDRESSED IN THIS CCO REMAIN IN FORCE

MARK	DATE	REVISIONS DESCRIPTIONS	BY	CH'D	CCO#
0	03/08/10	MEP INTEGRATION	SYC	FW	110

CONTRACT CHANGE ORDER NO._____
SHEET _____ OF _____

Conduit/Tray No: 6302 — Reference: E-617, E-656
Size: 103 — Type: RGS conduit
From: Hinge EW Girder Interface — To: 12.47 kV Vault
Total Fill (mm2): 3115.90 — Remarks: Installed in OTD-1 contract. System Ground cable is existing.
Allowable Fill (mm2): 3324.51
Description of Changes:

Included Cable No.	Conductor Type	Area (mm2)
1392	3-1/C #4/0, 15 KV, EPR insulation	2780.99
Pull Rope	Soft-Fiber Polyester	0.00
System Ground	500 kcmil, bare copper wire, stranded	334.91

Conduit/Tray No: 6530 — Reference: E-642
Size: 103 — Type: Liquidtight flex metal conduit
From: 1T10 — To: 6531
Total Fill (mm2): 3115.90 — Remarks: Installed in Skyway contract. System Ground cable is existing.
Allowable Fill (mm2): 3275.44
Description of Changes:

Included Cable No.	Conductor Type	Area (mm2)
1391	3-1/C #4/0, 15 KV, EPR insulation	2780.99
System Ground	500 kcmil, bare copper wire, stranded	334.91
Pull Rope	Soft-Fiber Polyester	0.00

Conduit/Tray No: 6531 — Reference: E-642
Size: 103 — Type: RGS conduit
From: 6530 — To: 6532
Total Fill (mm2): 3115.90 — Remarks: Installed in Skyway contract. System Ground cable is existing.
Allowable Fill (mm2): 3324.51
Description of Changes:

Included Cable No.	Conductor Type	Area (mm2)
1391	3-1/C #4/0, 15 KV, EPR insulation	2780.99
System Ground	500 kcmil, bare copper wire, stranded	334.91
Pull Rope	Soft-Fiber Polyester	0.00

Conduit/Tray No: 6532 — Reference: E-642
Size: 103 — Type: Liquidtight flex metal conduit
From: 6531 — To: 1T11
Total Fill (mm2): 3115.90 — Remarks: Installed in Skyway contract. System Ground cable is existing.
Allowable Fill (mm2): 3275.44
Description of Changes:

Included Cable No.	Conductor Type	Area (mm2)
1391	3-1/C #4/0, 15 KV, EPR insulation	2780.99
System Ground	500 kcmil, bare copper wire, stranded	334.91
Pull Rope	Soft-Fiber Polyester	0.00

Conduit/Tray No: 6554 — Reference: E-642
Size: 103 — Type: Liquidtight flex metal conduit
From: 1T40 — To: 6559
Total Fill (mm2): 647.30 — Remarks: Installed in Skyway contract.
Allowable Fill (mm2): 3275.44
Description of Changes:

Included Cable No.	Conductor Type	Area (mm2)
1475-4	72 Fiber, single mode fiber optic riser cable inside innerduct	323.65
1477-3	72 Fiber, single mode fiber optic riser cable inside innerduct	323.65
Pull Rope	Soft-Fiber Polyester	0.00
Spare Innerduct	25.4mm Smoothwall Innerduct	0.00
Spare Innerduct	25.4mm Smoothwall Innerduct	0.00

Conduit/Tray No: 6559 — Reference: E-642
Size: 103 — Type: RGS conduit
From: 6554 — To: 6564
Total Fill (mm2): 647.30 — Remarks: Installed in Skyway contract.
Allowable Fill (mm2): 3324.51
Description of Changes:

Included Cable No.	Conductor Type	Area (mm2)
1475-4	72 Fiber, single mode fiber optic riser cable inside innerduct	323.65
1477-3	72 Fiber, single mode fiber optic riser cable inside innerduct	323.65
Pull Rope	Soft-Fiber Polyester	0.00
Spare Innerduct	25.4mm Smoothwall Innerduct	0.00
Spare Innerduct	25.4mm Smoothwall Innerduct	0.00

EXISTING
CONDUIT AND TRAY SCHEDULE

E-1026

DATE	REVISED BY
01/10	DATE REVISED

CALCULATED/DESIGNED BY: SYC — CHECKED BY: FW

DESIGN OVERSIGHT: BEHZAD GOLEMOHAMMADI

STATE OF CALIFORNIA - DEPARTMENT OF TRANSPORTATION — Caltrans

THIS PLAN ACCURATE FOR ELECTRICAL WORK ONLY.

FOR REDUCED PLANS ORIGINAL SCALE IS IN MILLIMETERS 0 20 40 60 80

DGN FILE =>04-0120f1_E-1026.dgn
USERNAME =>llorico

CU 04251 — EA 0120F1

LAST REVISION 00-00-00 — DATE PLOTTED => 25-MAY-2010 — TIME PLOTTED => 13:45

DIST	COUNTY	ROUTE	KILOMETER POST TOTAL PROJECT	SHEET No	TOTAL SHEETS
04	SF, Ala	80	12.2/14.3 0.0/4.0	407a 10S28	1204

Syn Yee Chin 03/08/10
REGISTERED ELECTRICAL ENGINEER DATE

05-06-2010
PLANS APPROVAL DATE

REGISTERED PROFESSIONAL ENGINEER
SYN YEE CHIN
No. 18186
Exp. 09/30/2011
ELECTRICAL
STATE OF CALIFORNIA

PB AMERICAS, Inc.
A Parsons Brinckerhoff Company
303 Second St., Suite 700N
San Francisco, CA 94107-1317

The State of California or its officers or agents shall not be responsible for the accuracy or completeness of electronic copies of this plan sheet.

Caltrans now has a web site! To get to the web site, go to http://www.dot.ca.gov

REQUEST FOR INFORMATION NOT ADDRESSED IN THIS CCO REMAIN IN FORCE

MARK	DATE	DESCRIPTIONS	BY	CH'D	CCO#
		REVISIONS			
0	03/08/10	MEP INTEGRATION	SYC	FW	110

CONTRACT CHANGE ORDER NO._____
SHEET _____ OF _____

Conduit/Tray No:	6564	Reference:	E-642
Size:	103	Type:	Liquidtight flex metal conduit
From:	6559	To:	1T41 (on Skyway)
Total Fill (mm2):	647.30	Remarks:	Installed in Skyway contract.
Allowable Fill (mm2):	3275.44		
Description of Changes:			

Included Cable No.	Conductor Type	Area (mm2)
1475-4	72 Fiber, single mode fiber optic riser cable inside innerduct	323.65
1477-3	72 Fiber, single mode fiber optic riser cable inside innerduct	323.65
Pull Rope	Soft-Fiber Polyester	0.00
Spare Innerduct	25.4mm Smoothwall Innerduct	0.00
Spare Innerduct	25.4mm Smoothwall Innerduct	0.00

Conduit/Tray No:	6586	Reference:	E-648
Size:	103	Type:	Liquidtight flex metal conduit
From:	1T11	To:	6587
Total Fill (mm2):	3115.90	Remarks:	Installed in Skyway contract. System Ground cable is existing.
Allowable Fill (mm2):	3275.44		
Description of Changes:			

Included Cable No.	Conductor Type	Area (mm2)
1392	3-1/C #4/0, 15 KV, EPR insulation	2780.99
System Ground	500 kcmil, bare copper wire, stranded	334.91
Pull Rope	Soft-Fiber Polyester	0.00

Conduit/Tray No:	6587	Reference:	E-648
Size:	103	Type:	RGS conduit
From:	6586	To:	6588
Total Fill (mm2):	3115.90	Remarks:	Installed in Skyway contract. System Ground cable is existing.
Allowable Fill (mm2):	3324.51		
Description of Changes:			

Included Cable No.	Conductor Type	Area (mm2)
1392	3-1/C #4/0, 15 KV, EPR insulation	2780.99
System Ground	500 kcmil, bare copper wire, stranded	334.91
Pull Rope	Soft-Fiber Polyester	0.00

Conduit/Tray No:	6588	Reference:	E-648
Size:	103	Type:	Liquidtight flex metal conduit
From:	6587	To:	1T12
Total Fill (mm2):	3115.90	Remarks:	Installed in Skyway contract. System Ground cable is existing.
Allowable Fill (mm2):	3275.44		
Description of Changes:			

Included Cable No.	Conductor Type	Area (mm2)
1392	3-1/C #4/0, 15 KV, EPR insulation	2780.99
System Ground	500 kcmil, bare copper wire, stranded	334.91
Pull Rope	Soft-Fiber Polyester	0.00

Conduit/Tray No:	6610	Reference:	E-648
Size:	103	Type:	Liquidtight flex metal conduit
From:	1T41 (on Skyway)	To:	6615
Total Fill (mm2):	647.30	Remarks:	Installed in Skyway contract.
Allowable Fill (mm2):	3275.44		
Description of Changes:			

Included Cable No.	Conductor Type	Area (mm2)
1475-4	72 Fiber, single mode fiber optic riser cable inside innerduct	323.65
1477-3	72 Fiber, single mode fiber optic riser cable inside innerduct	323.65
Pull Rope	Soft-Fiber Polyester	0.00
Spare Innerduct	25.4mm Smoothwall Innerduct	0.00
Spare Innerduct	25.4mm Smoothwall Innerduct	0.00

EXISTING
CONDUIT AND TRAY SCHEDULE

E-1027

REVISED BY	DATE REVISED
SYC	01/10
CALCULATED/ DESIGNED BY	CHECKED BY
FW	

DESIGN OVERSIGHT BEHZAD GOLEMOHAMMADI

STATE OF CALIFORNIA - DEPARTMENT OF TRANSPORTATION
Caltrans

THIS PLAN ACCURATE FOR ELECTRICAL WORK ONLY.

FOR REDUCED PLANS ORIGINAL SCALE IS IN MILLIMETERS 0 20 40 60 80

DGN FILE =>04-0120f1_E-1027.dgn
USERNAME =>llorico

CU 04251

EA 0120F1

LAST REVISION 00-00-00
DATE PLOTTED => 25-MAY-2010
TIME PLOTTED => 13:45

DIST	COUNTY	ROUTE	KILOMETER POST TOTAL PROJECT	SHEET No	TOTAL SHEETS
04	SF, Ala	80	12.2/14.3 0.0/4.0	407a 10S29	1204

Syn Yee Chin 03/08/10
REGISTERED ELECTRICAL ENGINEER DATE

05-06-2010
PLANS APPROVAL DATE

REGISTERED PROFESSIONAL ENGINEER
SYN YEE CHIN
No. 18186
Exp. 09/30/2011
ELECTRICAL
STATE OF CALIFORNIA

PB AMERICAS, Inc.
A Parsons Brinckerhoff Company
303 Second St., Suite 700N
San Francisco, CA 94107-1317

The State of California or its officers or agents shall not be responsible for the accuracy or completeness of electronic copies of this plan sheet.

Caltrans now has a web site! To get to the web site, go to http://www.dot.ca.gov

REQUEST FOR INFORMATION NOT ADDRESSED IN THIS CCO REMAIN IN FORCE

MARK	DATE	DESCRIPTIONS	BY	CH'D	CCO#
		REVISIONS			
0	03/08/10	MEP INTEGRATION	SYC	FW	110

CONTRACT CHANGE ORDER NO._____
SHEET _____ OF _____

Conduit/Tray No: 6615 Reference: E-648
Size: 103 Type: RGS conduit
From: 6610 To: 6620
Total Fill (mm2): 647.30 Remarks: Installed in Skyway contract.
Allowable Fill (mm2): 3324.51
Description of Changes:

Included Cable No.	Conductor Type	Area (mm2)
1475-4	72 Fiber, single mode fiber optic riser cable inside innerduct	323.65
1477-3	72 Fiber, single mode fiber optic riser cable inside innerduct	323.65
Pull Rope	Soft-Fiber Polyester	0.00
Spare Innerduct	25.4mm Smoothwall Innerduct	0.00
Spare Innerduct	25.4mm Smoothwall Innerduct	0.00

Conduit/Tray No: 6620 Reference: E-648
Size: 103 Type: Liquidtight flex metal conduit
From: 6615 To: 1T42
Total Fill (mm2): 647.30 Remarks: Installed in Skyway contract.
Allowable Fill (mm2): 3275.44
Description of Changes:

Included Cable No.	Conductor Type	Area (mm2)
1475-4	72 Fiber, single mode fiber optic riser cable inside innerduct	323.65
1477-3	72 Fiber, single mode fiber optic riser cable inside innerduct	323.65
Pull Rope	Soft-Fiber Polyester	0.00
Spare Innerduct	25.4mm Smoothwall Innerduct	0.00
Spare Innerduct	25.4mm Smoothwall Innerduct	0.00

Conduit/Tray No: 6642 Reference: E-653
Size: 103 Type: Liquidtight flex metal conduit
From: 1T12 To: 6643
Total Fill (mm2): 3115.90 Remarks: Installed in Skyway contract. System ground cable is existing.
Allowable Fill (mm2): 3275.44
Description of Changes:

Included Cable No.	Conductor Type	Area (mm2)
1392	3-1/C #4/0, 15 KV, EPR insulation	2780.99
System Ground	500 kcmil, bare copper wire, stranded	334.91
Pull Rope	Soft-Fiber Polyester	0.00

Conduit/Tray No: 6643 Reference: E-653
Size: 103 Type: Liquidtight flex metal conduit
From: 6642 To: 6644
Total Fill (mm2): 3115.90 Remarks: Installed in Skyway contract. System ground cable is existing.
Allowable Fill (mm2): 3324.51
Description of Changes:

Included Cable No.	Conductor Type	Area (mm2)
1392	3-1/C #4/0, 15 KV, EPR insulation	2780.99
System Ground	500 kcmil, bare copper wire, stranded	334.91
Pull Rope	Soft-Fiber Polyester	0.00

Conduit/Tray No: 6644 Reference: E-653
Size: 103 Type: Liquidtight flex metal conduit
From: 6643 To: 1T13
Total Fill (mm2): 3115.90 Remarks: Installed in Skyway contract. System ground cable is existing.
Allowable Fill (mm2): 3275.44
Description of Changes:

Included Cable No.	Conductor Type	Area (mm2)
1392	3-1/C #4/0, 15 KV, EPR insulation	2780.99
System Ground	500 kcmil, bare copper wire, stranded	334.91
Pull Rope	Soft-Fiber Polyester	0.00

EXISTING
CONDUIT AND TRAY SCHEDULE

E-1028

THIS PLAN ACCURATE FOR ELECTRICAL WORK ONLY.

DESIGN OVERSIGHT BEHZAD GOLEMOHAMMADI
CALCULATED/DESIGNED BY CHECKED BY
SYC FW
DATE 01/10 01/10
REVISED BY DATE REVISED
STATE OF CALIFORNIA - DEPARTMENT OF TRANSPORTATION Caltrans

DATE PLOTTED => 25-MAY-2010
TIME PLOTTED => 13:45
LAST REVISION 00-00-00

FOR REDUCED PLANS ORIGINAL SCALE IS IN MILLIMETERS 0 20 40 60 80
DGN FILE =>04-0120f1_E-1028.dgn
USERNAME =>llorico
CU 04251
EA 0120F1

DIST	COUNTY	ROUTE	KILOMETER POST TOTAL PROJECT	SHEET No	TOTAL SHEETS
04	SF,Ala	80	12.2/14.3 0.0/4.0	407a 10S30	1204

Caltrans Metric

Syn Yee Chin 03/08/10
REGISTERED ELECTRICAL ENGINEER DATE

05-06-2010
PLANS APPROVAL DATE

REGISTERED PROFESSIONAL ENGINEER SYN YEE CHIN No. 18186 Exp. 09/30/2011 ELECTRICAL STATE OF CALIFORNIA

PB AMERICAS, Inc.
A Parsons Brinckerhoff Company
303 Second St., Suite 700N
San Francisco, CA 94107-1317

The State of California or its officers or agents shall not be responsible for the accuracy or completeness of electronic copies of this plan sheet.

Caltrans now has a web site! To get to the web site, go to http://www.dot.ca.gov

Conduit/Tray No:	6668	Reference:	E-653
Size:	103	Type:	Liquidtight flex metal conduit
From:	1T42	To:	6673
Total Fill (mm2):	647.30	Remarks:	Installed in Skyway contract.
Allowable Fill (mm2):	3275.44		

Description of Changes:

Included Cable No.	Conductor Type	Area (mm2)
1475-4	72 Fiber, single mode fiber optic riser cable inside innerduct	323.65
1477-3	72 Fiber, single mode fiber optic riser cable inside innerduct	323.65
Pull Rope	Soft-Fiber Polyester	0.00
Spare Innerduct	25.4mm Smoothwall Innerduct	0.00
Spare Innerduct	25.4mm Smoothwall Innerduct	0.00

Conduit/Tray No:	6673	Reference:	E-653
Size:	103	Type:	RGS conduit
From:	6668	To:	6678
Total Fill (mm2):	647.30	Remarks:	Installed in Skyway contract.
Allowable Fill (mm2):	3324.51		

Description of Changes:

Included Cable No.	Conductor Type	Area (mm2)
1475-4	72 Fiber, single mode fiber optic riser cable inside innerduct	323.65
1477-3	72 Fiber, single mode fiber optic riser cable inside innerduct	323.65
Pull Rope	Soft-Fiber Polyester	0.00
Spare Innerduct	25.4mm Smoothwall Innerduct	0.00
Spare Innerduct	25.4mm Smoothwall Innerduct	0.00

Conduit/Tray No:	6678	Reference:	E-653
Size:	103	Type:	Liquidtight flex metal conduit
From:	6673	To:	1T43 (on Skyway)
Total Fill (mm2):	647.30	Remarks:	Installed in Skyway contract.
Allowable Fill (mm2):	3275.44		

Description of Changes:

Included Cable No.	Conductor Type	Area (mm2)
1475-4	72 Fiber, single mode fiber optic riser cable inside innerduct	323.65
1477-3	72 Fiber, single mode fiber optic riser cable inside innerduct	323.65
Pull Rope	Soft-Fiber Polyester	0.00
Spare Innerduct	25.4mm Smoothwall Innerduct	0.00
Spare Innerduct	25.4mm Smoothwall Innerduct	0.00

REQUEST FOR INFORMATION NOT ADDRESSED IN THIS CCO REMAIN IN FORCE

MARK	DATE	DESCRIPTIONS	BY	CH'D	CCO#
0	03/08/10	MEP INTEGRATION	SYC	FW	110

REVISIONS

CONTRACT CHANGE ORDER NO._____
SHEET _____ OF _____

Conduit/Tray No:	6700	Reference:	E-655
Size:	103	Type:	Liquidtight flex metal conduit
From:	6937	To:	6701
Total Fill (mm2):	3115.90	Remarks:	Installed in Skyway contract. System ground cable is existing.
Allowable Fill (mm2):	3275.44		

Description of Changes:

Included Cable No.	Conductor Type	Area (mm2)
1392	3-1/C #4/0, 15 KV, EPR insulation	2780.99
Pull Rope	Soft-Fiber Polyester	0.00
System Ground	500 kcmil, bare copper wire, stranded	334.91

Conduit/Tray No:	6701	Reference:	E-655
Size:	103	Type:	RGS conduit
From:	6700	To:	Contract Interface @ Hinge EW
Total Fill (mm2):	3115.90	Remarks:	Installed in Skyway contract. System ground cable is existing.
Allowable Fill (mm2):	3324.51		

Description of Changes:

Included Cable No.	Conductor Type	Area (mm2)
1392	3-1/C #4/0, 15 KV, EPR insulation	2780.99
Pull Rope	Soft-Fiber Polyester	0.00
System Ground	500 kcmil, bare copper wire, stranded	334.91

EXISTING
CONDUIT AND TRAY SCHEDULE

E-1029

STATE OF CALIFORNIA - DEPARTMENT OF TRANSPORTATION
Caltrans

DESIGN OVERSIGHT: BEHZAD GOLEMOHAMMADI
CALCULATED/DESIGNED BY: SYC DATE 01/10
CHECKED BY: FW 01/10
REVISED BY
DATE REVISED

THIS PLAN ACCURATE FOR ELECTRICAL WORK ONLY.

FOR REDUCED PLANS ORIGINAL SCALE IS IN MILLIMETERS 0 20 40 60 80

DGN FILE =>04-0120f1_E-1029.dgn
USERNAME =>llorico

CU 04251 EA 0120F1

LAST REVISION 00-00-00
DATE PLOTTED => 25-MAY-2010
TIME PLOTTED => 13:46

DIST	COUNTY	ROUTE	KILOMETER POST TOTAL PROJECT	SHEET No	TOTAL SHEETS
04	SF, Ala	80	12.2/14.3 0.0/4.0	407a 10S31	1204

Synyee Chin 03/08/10
REGISTERED ELECTRICAL ENGINEER DATE

05-06-2010
PLANS APPROVAL DATE

REGISTERED PROFESSIONAL ENGINEER
SYN YEE CHIN
No. 18186
Exp. 09/30/2011
ELECTRICAL
STATE OF CALIFORNIA

PB AMERICAS, Inc.
A Parsons Brinckerhoff Company
303 Second St., Suite 700N
San Francisco, CA 94107-1317

The State of California or its officers or agents shall not be responsible for the accuracy or completeness of electronic copies of this plan sheet.

Caltrans now has a web site! To get to the web site, go to http://www.dot.ca.gov

REQUEST FOR INFORMATION NOT ADDRESSED IN THIS CCO REMAIN IN FORCE

MARK	DATE	REVISIONS DESCRIPTIONS	BY	CH'D	CCO#
0	03/08/10	MEP INTEGRATION	SYC	FW	110

CONTRACT CHANGE ORDER NO._____
SHEET _____ OF _____

Conduit/Tray No:	6719	Reference:	E-655
Size:	103	Type:	RGS conduit
From:	6972	To:	6724
Total Fill (mm2):	323.65	Remarks:	Installed in OTD-1 contract.
Allowable Fill (mm2):	3324.51		
Description of Changes:			

Included Cable No.	Conductor Type	Area (mm2)
1475-5	72 Fiber, single mode fiber optic riser cable inside innerduct	323.65
Pull Rope	Soft-Fiber Polyester	0.00
Spare Innerduct	25.4mm Smoothwall Innerduct	0.00
Spare Innerduct	25.4mm Smoothwall Innerduct	0.00
Spare Innerduct	25.4mm Smoothwall Innerduct	0.00

Conduit/Tray No:	6720	Reference:	E-655
Size:	103	Type:	RGS conduit
From:	6973	To:	6725
Total Fill (mm2):	323.65	Remarks:	Installed in OTD-1 contract.
Allowable Fill (mm2):	3324.51		
Description of Changes:			

Included Cable No.	Conductor Type	Area (mm2)
1477-4	72 Fiber, single mode fiber optic riser cable inside innerduct	323.65
Pull Rope	Soft-Fiber Polyester	0.00
Spare Innerduct	25.4mm Smoothwall Innerduct	0.00
Spare Innerduct	25.4mm Smoothwall Innerduct	0.00
Spare Innerduct	25.4mm Smoothwall Innerduct	0.00

Conduit/Tray No:	6724	Reference:	E-655
Size:	103	Type:	RGS conduit
From:	6719	To:	6729
Total Fill (mm2):	323.65	Remarks:	Installed in OTD-1 contract.
Allowable Fill (mm2):	3324.51		
Description of Changes:			

Included Cable No.	Conductor Type	Area (mm2)
1475-5	72 Fiber, single mode fiber optic riser cable inside innerduct	323.65
Pull Rope	Soft-Fiber Polyester	0.00
Spare Innerduct	25.4mm Smoothwall Innerduct	0.00
Spare Innerduct	25.4mm Smoothwall Innerduct	0.00
Spare Innerduct	25.4mm Smoothwall Innerduct	0.00

Conduit/Tray No:	6725	Reference:	E-655
Size:	103	Type:	RGS conduit
From:	6720	To:	6730
Total Fill (mm2):	323.65	Remarks:	Installed in OTD-1 contract.
Allowable Fill (mm2):	3324.51		
Description of Changes:			

Included Cable No.	Conductor Type	Area (mm2)
1477-4	72 Fiber, single mode fiber optic riser cable inside innerduct	323.65
Pull Rope	Soft-Fiber Polyester	0.00
Spare Innerduct	25.4mm Smoothwall Innerduct	0.00
Spare Innerduct	25.4mm Smoothwall Innerduct	0.00
Spare Innerduct	25.4mm Smoothwall Innerduct	0.00

Conduit/Tray No:	6729	Reference:	E-617, E-656
Size:	103	Type:	RGS conduit
From:	Hinge EW Girder Interface	To:	TOS/COM Vault
Total Fill (mm2):	323.65	Remarks:	Installed in OTD-1 contract.
Allowable Fill (mm2):	3324.51		
Description of Changes:			

Included Cable No.	Conductor Type	Area (mm2)
1475-5	72 Fiber, single mode fiber optic riser cable inside innerduct	323.65
Pull Rope	Soft-Fiber Polyester	0.00
Spare Innerduct	25.4mm Smoothwall Innerduct	0.00
Spare Innerduct	25.4mm Smoothwall Innerduct	0.00
Spare Innerduct	25.4mm Smoothwall Innerduct	0.00

EXISTING
CONDUIT AND TRAY SCHEDULE

E-1030

THIS PLAN ACCURATE FOR ELECTRICAL WORK ONLY.

REVISED BY	DATE REVISED
DATE 01/10	01/10
SYC	FW
CALCULATED/ DESIGNED BY	CHECKED BY

DESIGN OVERSIGHT
BEHZAD GOLEMOHAMMADI

STATE OF CALIFORNIA - DEPARTMENT OF TRANSPORTATION
Caltrans

DATE PLOTTED => 25-MAY-2010
TIME PLOTTED => 13:46
LAST REVISION 00-00-00

FOR REDUCED PLANS ORIGINAL SCALE IS IN MILLIMETERS 0 20 40 60 80

DGN FILE =>04-0120f1_E-1030.dgn
USERNAME =>llorico

CU 04251

EA 0120F1

Conduit/Tray No:	6730	Reference:	E-617, E-656
Size:	103	Type:	RGS conduit
From:	Hinge EW Girder Interface	To:	TOS/COM Vault
Total Fill (mm2):	323.65	Remarks:	Installed in OTD-1 contract.
Allowable Fill (mm2):	3324.51		
Description of Changes:			

Included Cable No.	Conductor Type	Area (mm2)
1477-4	72 Fiber, single mode fiber optic riser cable inside innerduct	323.65
Pull Rope	Soft-Fiber Polyester	0.00
Spare Innerduct	25.4mm Smoothwall Innerduct	0.00
Spare Innerduct	25.4mm Smoothwall Innerduct	0.00
Spare Innerduct	25.4mm Smoothwall Innerduct	0.00

Conduit/Tray No:	6937	Reference:	E-655
Size:	103	Type:	RGS conduit
From:	15 kV Splice Cable Tray (Hinge EW)	To:	6700
Total Fill (mm2):	3115.90	Remarks:	Installed in Skyway contract. System ground cable is existing.
Allowable Fill (mm2):	3324.51		
Description of Changes:			

Included Cable No.	Conductor Type	Area (mm2)
1392	3-1/C #4/0, 15 KV, EPR insulation	2780.99
System Ground	500 kcmil, bare copper wire, stranded	334.91
Pull Rope	Soft-Fiber Polyester	0.00

Conduit/Tray No:	6972	Reference:	E-655
Size:	103	Type:	RGS conduit
From:	1T43 (on Skyway)	To:	6719
Total Fill (mm2):	323.65	Remarks:	Installed in OTD-1 contract.
Allowable Fill (mm2):	3324.51		
Description of Changes:			

Included Cable No.	Conductor Type	Area (mm2)
1475-5	72 Fiber, single mode fiber optic riser cable inside innerduct	323.65
Pull Rope	Soft-Fiber Polyester	0.00
Spare Innerduct	25.4mm Smoothwall Innerduct	0.00
Spare Innerduct	25.4mm Smoothwall Innerduct	0.00
Spare Innerduct	25.4mm Smoothwall Innerduct	0.00

DIST	COUNTY	ROUTE	KILOMETER POST TOTAL PROJECT	SHEET No	TOTAL SHEETS
04	SF,Ala	80	12.2/14.3 0.0/4.0	407a 10S32	1204

Syn Yee Chin 03/08/10
REGISTERED ELECTRICAL ENGINEER DATE

REGISTERED PROFESSIONAL ENGINEER
SYN YEE CHIN
No. 18186
Exp. 09/30/2011
ELECTRICAL
STATE OF CALIFORNIA

05-06-2010
PLANS APPROVAL DATE

PB AMERICAS, Inc.
A Parsons Brinckerhoff Company
303 Second St., Suite 700N
San Francisco, CA 94107-1317

The State of California or its officers or agents shall not be responsible for the accuracy or completeness of electronic copies of this plan sheet.

Caltrans now has a web site! To get to the web site, go to http://www.dot.ca.gov

REQUEST FOR INFORMATION NOT ADDRESSED IN THIS CCO REMAIN IN FORCE

MARK	DATE	REVISIONS DESCRIPTIONS	BY	CH'D	CCO#
0	03/08/10	MEP INTEGRATION	SYC	FW	110

CONTRACT CHANGE ORDER NO._____
SHEET _____ OF _____

Conduit/Tray No:	6973	Reference:	E-655
Size:	103	Type:	RGS conduit
From:	1T43 (on Skyway)	To:	6720
Total Fill (mm2):	323.65	Remarks:	Installed in OTD-1 contract.
Allowable Fill (mm2):	3324.51		
Description of Changes:			

Included Cable No.	Conductor Type	Area (mm2)
1477-4	72 Fiber, single mode fiber optic riser cable inside innerduct	323.65
Pull Rope	Soft-Fiber Polyester	0.00
Spare Innerduct	25.4mm Smoothwall Innerduct	0.00
Spare Innerduct	25.4mm Smoothwall Innerduct	0.00
Spare Innerduct	25.4mm Smoothwall Innerduct	0.00

Conduit/Tray No:	7897	Reference:	E-833A
Size:	103	Type:	Liquidtight flex metal conduit
From:	2T42	To:	7901
Total Fill (mm2):	323.65	Remarks:	Installed in Skyway contract.
Allowable Fill (mm2):	3275.44		
Description of Changes:			

Included Cable No.	Conductor Type	Area (mm2)
2475-4	72 Fiber, single mode fiber optic riser cable inside innerduct	323.65
Pull Rope	Soft-Fiber Polyester	0.00
Spare Innerduct	25.4mm Smoothwall Innerduct	0.00
Spare Innerduct	25.4mm Smoothwall Innerduct	0.00
Spare Innerduct	25.4mm Smoothwall Innerduct	0.00

EXISTING
CONDUIT AND TRAY SCHEDULE

E-1031

THIS PLAN ACCURATE FOR ELECTRICAL WORK ONLY.

FOR REDUCED PLANS ORIGINAL SCALE IS IN MILLIMETERS 0 20 40 60 80

DGN FILE =>04-0120f1_E-1031.dgn
USERNAME =>llorico

CU 04251 EA 0120F1

DATE PLOTTED => 25-MAY-2010
TIME PLOTTED => 13:46

LAST REVISION 00-00-00

STATE OF CALIFORNIA - DEPARTMENT OF TRANSPORTATION
Caltrans

DESIGN OVERSIGHT BEHZAD GOLEMOHAMMADI

CALCULATED/DESIGNED BY SYC
CHECKED BY FW
DATE REVISED 01/10
REVISED BY

DIST	COUNTY	ROUTE	KILOMETER POST TOTAL PROJECT	SHEET No	TOTAL SHEETS
04	SF, Ala	80	12.2/14.3 0.0/4.0	407a 10S33	1204

Syn Yee Chin 03/08/10
REGISTERED ELECTRICAL ENGINEER DATE

05-06-2010
PLANS APPROVAL DATE

REGISTERED PROFESSIONAL ENGINEER
SYN YEE CHIN
No. 18186
Exp. 09/30/2011
ELECTRICAL
STATE OF CALIFORNIA

PB AMERICAS, Inc.
A Parsons Brinckerhoff Company
303 Second St., Suite 700N
San Francisco, CA 94107-1317

The State of California or its officers or agents shall not be responsible for the accuracy or completeness of electronic copies of this plan sheet.

Caltrans now has a web site! To get to the web site, go to http://www.dot.ca.gov

REQUEST FOR INFORMATION NOT ADDRESSED IN THIS CCO REMAIN IN FORCE

MARK	DATE	DESCRIPTIONS	BY	CH'D	CCO#
		REVISIONS			
0	03/08/10	MEP INTEGRATION	SYC	FW	110

CONTRACT CHANGE ORDER NO._____
SHEET _____ OF _____

Conduit/Tray No: 7901 Reference: E-833A
Size: 103 Type: RGS conduit
From: 7897 To: 7905
Total Fill (mm2): 323.65 Remarks: Installed in Skyway contract.
Allowable Fill (mm2): 3324.51
Description of Changes:

Included Cable No.	Conductor Type	Area (mm2)
2475-4	72 Fiber, single mode fiber optic riser cable inside innerduct	323.65
Pull Rope	Soft-Fiber Polyester	0.00
Spare Innerduct	25.4mm Smoothwall Innerduct	0.00
Spare Innerduct	25.4mm Smoothwall Innerduct	0.00
Spare Innerduct	25.4mm Smoothwall Innerduct	0.00

Conduit/Tray No: 7905 Reference: E-833A
Size: 103 Type: Liquidtight flex metal conduit
From: 7901 To: 2T43 (on Skyway)
Total Fill (mm2): 323.65 Remarks: Installed in Skyway contract.
Allowable Fill (mm2): 3275.44
Description of Changes:

Included Cable No.	Conductor Type	Area (mm2)
2475-4	72 Fiber, single mode fiber optic riser cable inside innerduct	323.65
Pull Rope	Soft-Fiber Polyester	0.00
Spare Innerduct	25.4mm Smoothwall Innerduct	0.00
Spare Innerduct	25.4mm Smoothwall Innerduct	0.00
Spare Innerduct	25.4mm Smoothwall Innerduct	0.00

Conduit/Tray No: 7926 Reference: E-833A
Size: 103 Type: Liquidtight flex metal conduit
From: 2T12 To: 7927
Total Fill (mm2): 3115.90 Remarks: Installed in Skyway contract. System Ground cable is existing.
Allowable Fill (mm2): 3275.44
Description of Changes:

Included Cable No.	Conductor Type	Area (mm2)
2392	3-1/C #4/0, 15 KV, EPR insulation	2780.99
System Ground	500 kcmil, bare copper wire, stranded	334.91
Pull Rope	Soft-Fiber Polyester	0.00

Conduit/Tray No: 7927 Reference: E-833A
Size: 103 Type: RGS conduit
From: 7926 To: 7928
Total Fill (mm2): 3115.90 Remarks: Installed in Skyway contract. System Ground cable is existing.
Allowable Fill (mm2): 3324.51
Description of Changes:

Included Cable No.	Conductor Type	Area (mm2)
2392	3-1/C #4/0, 15 KV, EPR insulation	2780.99
System Ground	500 kcmil, bare copper wire, stranded	334.91
Pull Rope	Soft-Fiber Polyester	0.00

Conduit/Tray No: 7928 Reference: E-833A
Size: 103 Type: Liquidtight flex metal conduit
From: 7927 To: 2T13 (on Skyway)
Total Fill (mm2): 3115.90 Remarks: Installed in Skyway contract. System Ground cable is existing.
Allowable Fill (mm2): 3275.44
Description of Changes:

Included Cable No.	Conductor Type	Area (mm2)
2392	3-1/C #4/0, 15 KV, EPR insulation	2780.99
System Ground	500 kcmil, bare copper wire, stranded	334.91
Pull Rope	Soft-Fiber Polyester	0.00

Conduit/Tray No: Wireway #12E Reference: E-823
Size: 203.2 Type: 203 mm x 203 mm Wireway, Nema 4X
From: Platform #12E To: Platform #12E
Total Fill (mm2): 30.19 Remarks: Installed in Skyway contract.
Allowable Fill (mm2): 8258.05
Description of Changes:

Included Cable No.	Conductor Type	Area (mm2)
2475-4D	12 Fiber, single mode fiber optic cable	30.19

EXISTING
CONDUIT AND TRAY SCHEDULE

E-1032

REVISED BY	DATE REVISED
DATE	01/10
SYC	FW
CALCULATED/ DESIGNED BY	CHECKED BY

DESIGN OVERSIGHT
BEHZAD GOLEMOHAMMADI

STATE OF CALIFORNIA - DEPARTMENT OF TRANSPORTATION
Caltrans

THIS PLAN ACCURATE FOR ELECTRICAL WORK ONLY.

FOR REDUCED PLANS ORIGINAL SCALE IS IN MILLIMETERS 0 20 40 60 80

DGN FILE =>04-0120f1_E-1032.dgn
USERNAME =>llorico

CU 04251 EA 0120F1

LAST REVISION 00-00-00
DATE PLOTTED => 25-MAY-2010
TIME PLOTTED => 13:46

DIST	COUNTY	ROUTE	KILOMETER POST TOTAL PROJECT	SHEET No	TOTAL SHEETS
04	SF, Ala	80	12.2/14.3 0.0/4.0	407a 10S34	1204

Syn Yee Chin 03/08/10
REGISTERED ELECTRICAL ENGINEER DATE

05-06-2010
PLANS APPROVAL DATE

REGISTERED PROFESSIONAL ENGINEER
SYN YEE CHIN
No. 18186
Exp. 09/30/2011
ELECTRICAL
STATE OF CALIFORNIA

PB AMERICAS, Inc.
A Parsons Brinckerhoff Company
303 Second St., Suite 700N
San Francisco, CA 94107-1317

The State of California or its officers or agents shall not be responsible for the accuracy or completeness of electronic copies of this plan sheet.

Caltrans now has a web site! To get to the web site, go to http://www.dot.ca.gov

REQUEST FOR INFORMATION NOT ADDRESSED IN THIS CCO REMAIN IN FORCE

MARK	DATE	REVISIONS DESCRIPTIONS	BY	CH'D	CCO#
0	03/08/10	MEP INTEGRATION	SYC	FW	110

CONTRACT CHANGE ORDER NO._____
SHEET _____ OF _____

Conduit/Tray No:	2544A	Reference:	E-836
Size:	103	Type:	Liquidtight flex metal conduit
From:	2T10	To:	15 kV Splice Cable Tray (Hinge BE)
Total Fill (mm2):	2780.99	Remarks:	
Allowable Fill (mm2):	3275.44		
Description of Changes:			

Included Cable No.	Conductor Type	Area (mm2)
2391	3-1/C #4/0, 15 KV, EPR insulation	2780.99
Pull Rope	Soft-Fiber Polyester	0.00

Conduit/Tray No:	2544B	Reference:	E-836
Size:	103	Type:	Liquidtight flex metal conduit
From:	15 kV Splice Cable Tray (Hinge BE)	To:	2T10
Total Fill (mm2):	2780.99	Remarks:	
Allowable Fill (mm2):	3275.44		
Description of Changes:			

Included Cable No.	Conductor Type	Area (mm2)
2391	3-1/C #4/0, 15 KV, EPR insulation	2780.99
Pull Rope	Soft-Fiber Polyester	0.00

Conduit/Tray No:	2593A	Reference:	E-836
Size:	103	Type:	Liquidtight flex metal conduit
From:	2T11	To:	15 kV Splice Cable Tray (Hinge CE)
Total Fill (mm2):	2780.99	Remarks:	
Allowable Fill (mm2):	3275.44		
Description of Changes:			

Included Cable No.	Conductor Type	Area (mm2)
2392	3-1/C #4/0, 15 KV, EPR insulation	2780.99
Pull Rope	Soft-Fiber Polyester	0.00

Conduit/Tray No:	2593B	Reference:	E-836
Size:	103	Type:	Liquidtight flex metal conduit
From:	15 kV Splice Cable Tray (Hinge CE)	To:	2T11
Total Fill (mm2):	2780.99	Remarks:	
Allowable Fill (mm2):	3275.44		
Description of Changes:			

Included Cable No.	Conductor Type	Area (mm2)
2392	3-1/C #4/0, 15 KV, EPR insulation	2780.99
Pull Rope	Soft-Fiber Polyester	0.00

Conduit/Tray No:	4852A	Reference:	E-663
Size:	103	Type:	Liquidtight flex metal conduit
From:	1T40	To:	TOS Splice Cable Tray (SP#09W)
Total Fill (mm2):	323.65	Remarks:	
Allowable Fill (mm2):	4339.96		
Description of Changes:			

Included Cable No.	Conductor Type	Area (mm2)
1475-4	72 Fiber, single mode fiber optic riser cable	323.65
Pull Rope	Soft-Fiber Polyester	0.00

Conduit/Tray No:	4852B	Reference:	E-663
Size:	103	Type:	Liquidtight flex metal conduit
From:	TOS Splice Cable Tray (SP#09W)	To:	1T40
Total Fill (mm2):	323.65	Remarks:	
Allowable Fill (mm2):	4339.96		
Description of Changes:			

Included Cable No.	Conductor Type	Area (mm2)
1475-4	72 Fiber, single mode fiber optic riser cable	323.65
Pull Rope	Soft-Fiber Polyester	0.00

Conduit/Tray No:	4862A	Reference:	E-663
Size:	103	Type:	Liquidtight flex metal conduit
From:	1T40	To:	TOS Splice Cable Tray (SP#10W)
Total Fill (mm2):	323.65	Remarks:	
Allowable Fill (mm2):	4339.96		
Description of Changes:			

Included Cable No.	Conductor Type	Area (mm2)
1475-4	72 Fiber, single mode fiber optic riser cable	323.65
Pull Rope	Soft-Fiber Polyester	0.00

NEW
CONDUIT AND TRAY SCHEDULE

E-1033

MARK	DATE	REVISED BY	DATE REVISED
0	03/10	FW	03/10

CALCULATED/DESIGNED BY
CHECKED BY
SYC

DESIGN OVERSIGHT
BEHZAD GOLEMOHAMMADI

STATE OF CALIFORNIA - DEPARTMENT OF TRANSPORTATION
Caltrans

THIS PLAN ACCURATE FOR ELECTRICAL WORK ONLY.

FOR REDUCED PLANS ORIGINAL SCALE IS IN MILLIMETERS 0 20 40 60 80

DGN FILE =>04-0120f1_E-1033.dgn
USERNAME =>llorico

CU 04251

EA 0120F1

DATE PLOTTED => 25-MAY-2010
TIME PLOTTED => 13:46

LAST REVISION 00-00-00

Conduit/Tray No:	4862B	Reference:	E-663
Size:	103	Type:	Liquidtight flex metal conduit
From:	TOS Splice Cable Tray (SP#10W)	To:	1T40
Total Fill (mm2):	323.65	Remarks:	
Allowable Fill (mm2):	4339.96		
Description of Changes:			

Included Cable No.	Conductor Type	Area (mm2)
1475-4	72 Fiber, single mode fiber optic riser cable	323.65
Pull Rope	Soft-Fiber Polyester	0.00

Conduit/Tray No:	4872A	Reference:	E-663
Size:	103	Type:	Liquidtight flex metal conduit
From:	1T40	To:	TOS Splice Cable Tray (SP#11W)
Total Fill (mm2):	323.65	Remarks:	
Allowable Fill (mm2):	4339.96		
Description of Changes:			

Included Cable No.	Conductor Type	Area (mm2)
1475-4	72 Fiber, single mode fiber optic riser cable	323.65
Pull Rope	Soft-Fiber Polyester	0.00

Conduit/Tray No:	4872B	Reference:	E-663
Size:	103	Type:	Liquidtight flex metal conduit
From:	TOS Splice Cable Tray (SP#11W)	To:	1T40
Total Fill (mm2):	323.65	Remarks:	
Allowable Fill (mm2):	4339.96		
Description of Changes:			

Included Cable No.	Conductor Type	Area (mm2)
1475-4	72 Fiber, single mode fiber optic riser cable	323.65
Pull Rope	Soft-Fiber Polyester	0.00

Conduit/Tray No:	4881A	Reference:	E-663
Size:	103	Type:	Liquidtight flex metal conduit
From:	1T40	To:	TOS Splice Cable Tray (SP#12W)
Total Fill (mm2):	323.65	Remarks:	
Allowable Fill (mm2):	4339.96		
Description of Changes:			

Included Cable No.	Conductor Type	Area (mm2)
1475-4	72 Fiber, single mode fiber optic riser cable	323.65
Pull Rope	Soft-Fiber Polyester	0.00

Conduit/Tray No:	4881B	Reference:	E-663
Size:	103	Type:	Liquidtight flex metal conduit
From:	TOS Splice Cable Tray (SP#12W)	To:	1T40
Total Fill (mm2):	323.65	Remarks:	
Allowable Fill (mm2):	4339.96		
Description of Changes:			

Included Cable No.	Conductor Type	Area (mm2)
1475-4	72 Fiber, single mode fiber optic riser cable	323.65
Pull Rope	Soft-Fiber Polyester	0.00

Conduit/Tray No:	4912A	Reference:	E-663
Size:	103	Type:	Liquidtight flex metal conduit
From:	1T41	To:	TOS Splice Cable Tray (SP#15W)
Total Fill (mm2):	323.65	Remarks:	
Allowable Fill (mm2):	4339.96		
Description of Changes:			

Included Cable No.	Conductor Type	Area (mm2)
1475-4	72 Fiber, single mode fiber optic riser cable	323.65
Pull Rope	Soft-Fiber Polyester	0.00

Conduit/Tray No:	4912B	Reference:	E-663
Size:	103	Type:	Liquidtight flex metal conduit
From:	TOS Splice Cable Tray (SP#15W)	To:	1T41
Total Fill (mm2):	323.65	Remarks:	
Allowable Fill (mm2):	4339.96		
Description of Changes:			

Included Cable No.	Conductor Type	Area (mm2)
1475-4	72 Fiber, single mode fiber optic riser cable	323.65
Pull Rope	Soft-Fiber Polyester	0.00

REQUEST FOR INFORMATION NOT ADDRESSED IN THIS CCO REMAIN IN FORCE

MARK	DATE	DESCRIPTIONS	BY	CH'D	CCO#
		REVISIONS			
0	03/08/10	MEP INTEGRATION	SYC	FW	110

CONTRACT CHANGE ORDER NO._____
SHEET _____ OF _____

DIST	COUNTY	ROUTE	KILOMETER POST TOTAL PROJECT	SHEET No	TOTAL SHEETS
04	SF, Ala	80	12.2/14.3 0.0/4.0	407a 10S35	1204

Syn Yee Chin 03/08/10
REGISTERED ELECTRICAL ENGINEER DATE

05-06-2010
PLANS APPROVAL DATE

REGISTERED PROFESSIONAL ENGINEER
SYN YEE CHIN
No. 18186
Exp. 09/30/2011
ELECTRICAL
STATE OF CALIFORNIA

PB AMERICAS, Inc.
A Parsons Brinckerhoff Company
303 Second St., Suite 700N
San Francisco, CA 94107-1317

The State of California or its officers or agents shall not be responsible for the accuracy or completeness of electronic copies of this plan sheet.

Caltrans now has a web site! To get to the web site, go to http://www.dot.ca.gov

NEW
CONDUIT AND TRAY SCHEDULE

E-1034

DESIGN OVERSIGHT
BEHZAD GOLEMOHAMMADI

STATE OF CALIFORNIA - DEPARTMENT OF TRANSPORTATION
Caltrans

CALCULATED/ DESIGNED BY	CHECKED BY
SYC	FW
DATE 01/10	01/10
REVISED BY	DATE REVISED

THIS PLAN ACCURATE FOR ELECTRICAL WORK ONLY.

FOR REDUCED PLANS ORIGINAL SCALE IS IN MILLIMETERS 0 20 40 60 80

DGN FILE =>04-0120f1_E-1034.dgn
USERNAME =>llorico

CU 04251

EA 0120F1

LAST REVISION 00-00-00
DATE PLOTTED => 25-MAY-2010
TIME PLOTTED => 13:46

DIST	COUNTY	ROUTE	KILOMETER POST TOTAL PROJECT	SHEET No	TOTAL SHEETS
04	SF, Ala	80	12.2/14.3 0.0/4.0	407a 10S36	1204

Syn Yee Chin 03/08/10
REGISTERED ELECTRICAL ENGINEER DATE

05-06-2010
PLANS APPROVAL DATE

REGISTERED PROFESSIONAL ENGINEER
SYN YEE CHIN
No. 18186
Exp. 09/30/2011
ELECTRICAL
STATE OF CALIFORNIA

PB AMERICAS, Inc.
A Parsons Brinckerhoff Company
303 Second St., Suite 700N
San Francisco, CA 94107-1317

The State of California or its officers or agents shall not be responsible for the accuracy or completeness of electronic copies of this plan sheet.

Caltrans now has a web site! To get to the web site, go to http://www.dot.ca.gov

REQUEST FOR INFORMATION NOT ADDRESSED IN THIS CCO REMAIN IN FORCE

MARK	DATE	REVISIONS DESCRIPTIONS	BY	CH'D	CCO#
0	03/08/10	MEP INTEGRATION	SYC	FW	110

CONTRACT CHANGE ORDER NO._____
SHEET _____ OF _____

Conduit/Tray No:	4922A	Reference:	E-663
Size:	103	Type:	Liquidtight flex metal conduit
From:	1T41	To:	TOS Splice Cable Tray (SP#16W)
Total Fill (mm2):	323.65	Remarks:	
Allowable Fill (mm2):	4339.96		
Description of Changes:			

Included Cable No.	Conductor Type	Area (mm2)
1475-4	72 Fiber, single mode fiber optic riser cable	323.65
Pull Rope	Soft-Fiber Polyester	0.00

Conduit/Tray No:	4922B	Reference:	E-663
Size:	103	Type:	Liquidtight flex metal conduit
From:	TOS Splice Cable Tray (SP#16W)	To:	1T41
Total Fill (mm2):	323.65	Remarks:	
Allowable Fill (mm2):	4339.96		
Description of Changes:			

Included Cable No.	Conductor Type	Area (mm2)
1475-4	72 Fiber, single mode fiber optic riser cable	323.65
Pull Rope	Soft-Fiber Polyester	0.00

Conduit/Tray No:	4931A	Reference:	E-663
Size:	103	Type:	Liquidtight flex metal conduit
From:	1T42	To:	TOS Splice Cable Tray (SP#17W)
Total Fill (mm2):	323.65	Remarks:	
Allowable Fill (mm2):	4339.96		
Description of Changes:			

Included Cable No.	Conductor Type	Area (mm2)
1475-4	72 Fiber, single mode fiber optic riser cable	323.65
Pull Rope	Soft-Fiber Polyester	0.00

Conduit/Tray No:	4931B	Reference:	E-663
Size:	103	Type:	Liquidtight flex metal conduit
From:	TOS Splice Cable Tray (SP#17W)	To:	1T42
Total Fill (mm2):	323.65	Remarks:	
Allowable Fill (mm2):	4339.96		
Description of Changes:			

Included Cable No.	Conductor Type	Area (mm2)
1475-4	72 Fiber, single mode fiber optic riser cable	323.65
Pull Rope	Soft-Fiber Polyester	0.00

Conduit/Tray No:	4942A	Reference:	E-663
Size:	103	Type:	Liquidtight flex metal conduit
From:	1T42	To:	TOS Splice Cable Tray (SP#18W)
Total Fill (mm2):	323.65	Remarks:	
Allowable Fill (mm2):	4339.96		
Description of Changes:			

Included Cable No.	Conductor Type	Area (mm2)
1475-4	72 Fiber, single mode fiber optic riser cable	323.65
Pull Rope	Soft-Fiber Polyester	0.00

Conduit/Tray No:	4942B	Reference:	E-663
Size:	103	Type:	Liquidtight flex metal conduit
From:	TOS Splice Cable Tray (SP#18W)	To:	1T42
Total Fill (mm2):	323.65	Remarks:	
Allowable Fill (mm2):	4339.96		
Description of Changes:			

Included Cable No.	Conductor Type	Area (mm2)
1475-4	72 Fiber, single mode fiber optic riser cable	323.65
Pull Rope	Soft-Fiber Polyester	0.00

Conduit/Tray No:	4962A	Reference:	E-663
Size:	103	Type:	Liquidtight flex metal conduit
From:	1T42	To:	TOS Splice Cable Tray (SP#20W)
Total Fill (mm2):	323.65	Remarks:	
Allowable Fill (mm2):	4339.96		
Description of Changes:			

Included Cable No.	Conductor Type	Area (mm2)
1475-4	72 Fiber, single mode fiber optic riser cable	323.65
Pull Rope	Soft-Fiber Polyester	0.00

NEW
CONDUIT AND TRAY SCHEDULE

E-1035

DATE	BY	REVISED
01/10	FW	DATE REVISED

CALCULATED/DESIGNED BY
CHECKED BY
SYC

DESIGN OVERSIGHT
BEHZAD GOLEMOHAMMADI

STATE OF CALIFORNIA - DEPARTMENT OF TRANSPORTATION
Caltrans

THIS PLAN ACCURATE FOR ELECTRICAL WORK ONLY.

FOR REDUCED PLANS ORIGINAL SCALE IS IN MILLIMETERS 0 20 40 60 80

DGN FILE =>04-0120f1_E-1035.dgn
USERNAME =>llorico

CU 04251

EA 0120F1

LAST REVISION 00-00-00
DATE PLOTTED => 25-MAY-2010
TIME PLOTTED => 13:46

DIST	COUNTY	ROUTE	KILOMETER POST TOTAL PROJECT	SHEET No	TOTAL SHEETS
04	SF, Ala	80	12.2/14.3 0.0/4.0	407a 10S37	1204

Syn Yee Chin 03/08/10
REGISTERED ELECTRICAL ENGINEER DATE

05-06-2010
PLANS APPROVAL DATE

REGISTERED PROFESSIONAL ENGINEER
SYN YEE CHIN
No. 18186
Exp. 09/30/2011
ELECTRICAL
STATE OF CALIFORNIA

PB AMERICAS, Inc.
A Parsons Brinckerhoff Company
303 Second St., Suite 700N
San Francisco, CA 94107-1317

The State of California or its officers or agents shall not be responsible for the accuracy or completeness of electronic copies of this plan sheet.

Caltrans now has a web site! To get to the web site, go to http://www.dot.ca.gov

REQUEST FOR INFORMATION NOT ADDRESSED IN THIS CCO REMAIN IN FORCE

MARK	DATE	REVISIONS DESCRIPTIONS	BY	CH'D	CCO#
0	03/08/10	MEP INTEGRATION	SYC	FW	110

CONTRACT CHANGE ORDER NO._____
SHEET _____ OF _____

Conduit/Tray No:	4962B	Reference:	E-663
Size:	103	Type:	Liquidtight flex metal conduit
From:	TOS Splice Cable Tray (SP#20W)	To:	1T42
Total Fill (mm2):	323.65	Remarks:	
Allowable Fill (mm2):	4339.96		
Description of Changes:			

Included Cable No.	Conductor Type	Area (mm2)
1475-4	72 Fiber, single mode fiber optic riser cable	323.65
Pull Rope	Soft-Fiber Polyester	0.00

Conduit/Tray No:	4972A	Reference:	E-663
Size:	103	Type:	Liquidtight flex metal conduit
From:	1T43	To:	TOS Splice Cable Tray (SP#21W)
Total Fill (mm2):	323.65	Remarks:	
Allowable Fill (mm2):	4339.96		
Description of Changes:			

Included Cable No.	Conductor Type	Area (mm2)
1475-4	72 Fiber, single mode fiber optic riser cable	323.65
Pull Rope	Soft-Fiber Polyester	0.00

Conduit/Tray No:	4972B	Reference:	E-663
Size:	103	Type:	Liquidtight flex metal conduit
From:	TOS Splice Cable Tray (SP#21W)	To:	1T43
Total Fill (mm2):	323.65	Remarks:	
Allowable Fill (mm2):	4339.96		
Description of Changes:			

Included Cable No.	Conductor Type	Area (mm2)
1475-4	72 Fiber, single mode fiber optic riser cable	323.65
Pull Rope	Soft-Fiber Polyester	0.00

Conduit/Tray No:	4982A	Reference:	E-663
Size:	103	Type:	Liquidtight flex metal conduit
From:	1T41	To:	TOS Splice Cable Tray (SP#13W)
Total Fill (mm2):	323.65	Remarks:	
Allowable Fill (mm2):	4339.96		
Description of Changes:			

Included Cable No.	Conductor Type	Area (mm2)
1475-4	72 Fiber, single mode fiber optic riser cable	323.65
Pull Rope	Soft-Fiber Polyester	0.00

Conduit/Tray No:	4982B	Reference:	E-663
Size:	103	Type:	Liquidtight flex metal conduit
From:	TOS Splice Cable Tray (SP#13W)	To:	1T41
Total Fill (mm2):	323.65	Remarks:	
Allowable Fill (mm2):	4339.96		
Description of Changes:			

Included Cable No.	Conductor Type	Area (mm2)
1475-4	72 Fiber, single mode fiber optic riser cable	323.65
Pull Rope	Soft-Fiber Polyester	0.00

Conduit/Tray No:	5852A	Reference:	E-836
Size:	103	Type:	Liquidtight flex metal conduit
From:	2T40	To:	TOS Splice Cable Tray (SP#09E)
Total Fill (mm2):	323.65	Remarks:	
Allowable Fill (mm2):	4339.96		
Description of Changes:			

Included Cable No.	Conductor Type	Area (mm2)
2475-4	72 Fiber, single mode fiber optic riser cable	323.65
Pull Rope	Soft-Fiber Polyester	0.00

Conduit/Tray No:	5852B	Reference:	E-836
Size:	103	Type:	Liquidtight flex metal conduit
From:	TOS Splice Cable Tray (SP#09E)	To:	2T40
Total Fill (mm2):	323.65	Remarks:	
Allowable Fill (mm2):	4339.96		
Description of Changes:			

Included Cable No.	Conductor Type	Area (mm2)
2475-4	72 Fiber, single mode fiber optic riser cable	323.65
Pull Rope	Soft-Fiber Polyester	0.00

NEW
CONDUIT AND TRAY SCHEDULE

E-1036

DESIGN OVERSIGHT	CALCULATED/ DESIGNED BY	CHECKED BY	DRAWN BY	CHECKED BY	DATE REVISED
BEHZAD GOLEMOHAMMADI	SYC	FW	01/10		

STATE OF CALIFORNIA - DEPARTMENT OF TRANSPORTATION
Caltrans

THIS PLAN ACCURATE FOR ELECTRICAL WORK ONLY.

FOR REDUCED PLANS ORIGINAL SCALE IS IN MILLIMETERS 0 20 40 60 80

DGN FILE =>04-0120f1_E-1036.dgn
USERNAME =>llorico

CU 04251 EA 0120F1

LAST REVISION 00-00-00 DATE PLOTTED => 25-MAY-2010 TIME PLOTTED => 13:46

DIST	COUNTY	ROUTE	KILOMETER POST TOTAL PROJECT	SHEET No	TOTAL SHEETS
04	SF, Ala	80	12.2/14.3 0.0/4.0	407a 10S38	1204

Syn Yee Chin 03/08/10
REGISTERED ELECTRICAL ENGINEER DATE

05-06-2010
PLANS APPROVAL DATE

REGISTERED PROFESSIONAL ENGINEER
SYN YEE CHIN
No. 18186
Exp. 09/30/2011
ELECTRICAL
STATE OF CALIFORNIA

PB AMERICAS, Inc.
A Parsons Brinckerhoff Company
303 Second St., Suite 700N
San Francisco, CA 94107-1317

The State of California or its officers or agents shall not be responsible for the accuracy or completeness of electronic copies of this plan sheet.

Caltrans now has a web site! To get to the web site, go to http://www.dot.ca.gov

REQUEST FOR INFORMATION NOT ADDRESSED IN THIS CCO REMAIN IN FORCE

MARK	DATE	REVISIONS DESCRIPTIONS	BY	CH'D	CCO#
0	03/08/10	MEP INTEGRATION	SYC	FW	110

CONTRACT CHANGE ORDER NO._____
SHEET _____ OF _____

Conduit/Tray No:	5862A	Reference:	E-836
Size:	103	Type:	Liquidtight flex metal conduit
From:	2T40	To:	TOS Splice Cable Tray (SP#10E)
Total Fill (mm2):	323.65	Remarks:	
Allowable Fill (mm2):	4339.96		
Description of Changes:			

Included Cable No.	Conductor Type	Area (mm2)
2475-4	72 Fiber, single mode fiber optic riser cable	323.65
Pull Rope	Soft-Fiber Polyester	0.00

Conduit/Tray No:	5862B	Reference:	E-836
Size:	103	Type:	Liquidtight flex metal conduit
From:	TOS Splice Cable Tray (SP#10E)	To:	2T40
Total Fill (mm2):	323.65	Remarks:	
Allowable Fill (mm2):	4339.96		
Description of Changes:			

Included Cable No.	Conductor Type	Area (mm2)
2475-4	72 Fiber, single mode fiber optic riser cable	323.65
Pull Rope	Soft-Fiber Polyester	0.00

Conduit/Tray No:	5872A	Reference:	E-836
Size:	103	Type:	Liquidtight flex metal conduit
From:	2T40	To:	TOS Splice Cable Tray (SP#11E)
Total Fill (mm2):	323.65	Remarks:	
Allowable Fill (mm2):	4339.96		
Description of Changes:			

Included Cable No.	Conductor Type	Area (mm2)
2475-4	72 Fiber, single mode fiber optic riser cable	323.65
Pull Rope	Soft-Fiber Polyester	0.00

Conduit/Tray No:	5872B	Reference:	E-836
Size:	103	Type:	Liquidtight flex metal conduit
From:	TOS Splice Cable Tray (SP#11E)	To:	2T40
Total Fill (mm2):	323.65	Remarks:	
Allowable Fill (mm2):	4339.96		
Description of Changes:			

Included Cable No.	Conductor Type	Area (mm2)
2475-4	72 Fiber, single mode fiber optic riser cable	323.65
Pull Rope	Soft-Fiber Polyester	0.00

Conduit/Tray No:	5882A	Reference:	E-836
Size:	103	Type:	Liquidtight flex metal conduit
From:	2T40	To:	TOS Splice Cable Tray (SP#12E)
Total Fill (mm2):	323.65	Remarks:	
Allowable Fill (mm2):	4339.96		
Description of Changes:			

Included Cable No.	Conductor Type	Area (mm2)
2475-4	72 Fiber, single mode fiber optic riser cable	323.65
Pull Rope	Soft-Fiber Polyester	0.00

Conduit/Tray No:	5882B	Reference:	E-836
Size:	103	Type:	Liquidtight flex metal conduit
From:	TOS Splice Cable Tray (SP#12E)	To:	2T40
Total Fill (mm2):	323.65	Remarks:	
Allowable Fill (mm2):	4339.96		
Description of Changes:			

Included Cable No.	Conductor Type	Area (mm2)
2475-4	72 Fiber, single mode fiber optic riser cable	323.65
Pull Rope	Soft-Fiber Polyester	0.00

Conduit/Tray No:	5891A	Reference:	E-836
Size:	103	Type:	Liquidtight flex metal conduit
From:	2T41	To:	TOS Splice Cable Tray (SP#13E)
Total Fill (mm2):	323.65	Remarks:	
Allowable Fill (mm2):	4339.96		
Description of Changes:			

Included Cable No.	Conductor Type	Area (mm2)
2475-4	72 Fiber, single mode fiber optic riser cable	323.65
Pull Rope	Soft-Fiber Polyester	0.00

NEW
CONDUIT AND TRAY SCHEDULE

E-1037

DATE	REVISED BY
01/10	FW

CALCULATED/DESIGNED BY SYC
CHECKED BY FW

DESIGN OVERSIGHT
BEHZAD GOLEMOHAMMADI

STATE OF CALIFORNIA - DEPARTMENT OF TRANSPORTATION
Caltrans

THIS PLAN ACCURATE FOR ELECTRICAL WORK ONLY.

LAST REVISION 00-00-00
DATE PLOTTED => 25-MAY-2010
TIME PLOTTED => 13:47

FOR REDUCED PLANS ORIGINAL SCALE IS IN MILLIMETERS 0 20 40 60 80

DGN FILE =>04-0120f1_E-1037.dgn
USERNAME =>llorico

CU 04251

EA 0120F1

DIST	COUNTY	ROUTE	KILOMETER POST TOTAL PROJECT	SHEET No	TOTAL SHEETS
04	SF, Ala	80	12.2/14.3 0.0/4.0	407a 10S39	1204

Syn Yee Chin 03/08/10
REGISTERED ELECTRICAL ENGINEER DATE

05-06-2010
PLANS APPROVAL DATE

REGISTERED PROFESSIONAL ENGINEER
SYN YEE CHIN
No. 18186
Exp. 09/30/2011
ELECTRICAL
STATE OF CALIFORNIA

PB AMERICAS, Inc.
A Parsons Brinckerhoff Company
303 Second St., Suite 700N
San Francisco, CA 94107-1317

The State of California or its officers or agents shall not be responsible for the accuracy or completeness of electronic copies of this plan sheet.

Caltrans now has a web site! To get to the web site, go to http://www.dot.ca.gov

REQUEST FOR INFORMATION NOT ADDRESSED IN THIS CCO REMAIN IN FORCE

MARK	DATE	REVISIONS DESCRIPTIONS	BY	CH'D	CCO#
0	03/08/10	MEP INTEGRATION	SYC	FW	110

CONTRACT CHANGE ORDER NO._____
SHEET _____ OF _____

Conduit/Tray No:	5891B	Reference:	E-836
Size:	103	Type:	Liquidtight flex metal conduit
From:	TOS Splice Cable Tray (SP#13E)	To:	2T41
Total Fill (mm2):	323.65	Remarks:	
Allowable Fill (mm2):	4339.96		
Description of Changes:			

Included Cable No.	Conductor Type	Area (mm2)
2475-4	72 Fiber, single mode fiber optic riser cable	323.65
Pull Rope	Soft-Fiber Polyester	0.00

Conduit/Tray No:	5912A	Reference:	E-836
Size:	103	Type:	Liquidtight flex metal conduit
From:	2T41	To:	TOS Splice Cable Tray (SP#15E)
Total Fill (mm2):	323.65	Remarks:	
Allowable Fill (mm2):	4339.96		
Description of Changes:			

Included Cable No.	Conductor Type	Area (mm2)
2475-4	72 Fiber, single mode fiber optic riser cable	323.65
Pull Rope	Soft-Fiber Polyester	0.00

Conduit/Tray No:	5912B	Reference:	E-836
Size:	103	Type:	Liquidtight flex metal conduit
From:	TOS Splice Cable Tray (SP#15E)	To:	2T41
Total Fill (mm2):	323.65	Remarks:	
Allowable Fill (mm2):	4339.96		
Description of Changes:			

Included Cable No.	Conductor Type	Area (mm2)
2475-4	72 Fiber, single mode fiber optic riser cable	323.65
Pull Rope	Soft-Fiber Polyester	0.00

Conduit/Tray No:	5922A	Reference:	E-836
Size:	103	Type:	Liquidtight flex metal conduit
From:	2T41	To:	TOS Splice Cable Tray (SP#16E)
Total Fill (mm2):	323.65	Remarks:	
Allowable Fill (mm2):	4339.96		
Description of Changes:			

Included Cable No.	Conductor Type	Area (mm2)
2475-4	72 Fiber, single mode fiber optic riser cable	323.65
Pull Rope	Soft-Fiber Polyester	0.00

Conduit/Tray No:	5922B	Reference:	E-836
Size:	103	Type:	Liquidtight flex metal conduit
From:	TOS Splice Cable Tray (SP#16E)	To:	2T41
Total Fill (mm2):	323.65	Remarks:	
Allowable Fill (mm2):	4339.96		
Description of Changes:			

Included Cable No.	Conductor Type	Area (mm2)
2475-4	72 Fiber, single mode fiber optic riser cable	323.65
Pull Rope	Soft-Fiber Polyester	0.00

Conduit/Tray No:	5932A	Reference:	E-836
Size:	103	Type:	Liquidtight flex metal conduit
From:	2T42	To:	TOS Splice Cable Tray (SP#17E)
Total Fill (mm2):	323.65	Remarks:	
Allowable Fill (mm2):	4339.96		
Description of Changes:			

Included Cable No.	Conductor Type	Area (mm2)
2475-4	72 Fiber, single mode fiber optic riser cable	323.65
Pull Rope	Soft-Fiber Polyester	0.00

Conduit/Tray No:	5932B	Reference:	E-836
Size:	103	Type:	Liquidtight flex metal conduit
From:	TOS Splice Cable Tray (SP#17E)	To:	2T42
Total Fill (mm2):	323.65	Remarks:	
Allowable Fill (mm2):	4339.96		
Description of Changes:			

Included Cable No.	Conductor Type	Area (mm2)
2475-4	72 Fiber, single mode fiber optic riser cable	323.65
Pull Rope	Soft-Fiber Polyester	0.00

NEW
CONDUIT AND TRAY SCHEDULE

E-1038

CALCULATED/ DESIGNED BY	CHECKED BY
SYC	FW
DATE 01/10	01/10
REVISED BY	DATE REVISED

DESIGN OVERSIGHT
BEHZAD GOLEMOHAMMADI

STATE OF CALIFORNIA - DEPARTMENT OF TRANSPORTATION
Caltrans

THIS PLAN ACCURATE FOR ELECTRICAL WORK ONLY.

FOR REDUCED PLANS ORIGINAL SCALE IS IN MILLIMETERS 0 20 40 60 80

DGN FILE =>04-0120f1_E-1038.dgn
USERNAME =>llorico

CU 04251

EA 0120F1

LAST REVISION 00-00-00
DATE PLOTTED => 25-MAY-2010
TIME PLOTTED => 13:47

DIST	COUNTY	ROUTE	KILOMETER POST TOTAL PROJECT	SHEET No	TOTAL SHEETS
04	SF, Ala	80	12.2/14.3 0.0/4.0	407a 10S40	1204

Syn Yee Chin 03/08/10
REGISTERED ELECTRICAL ENGINEER DATE

05-06-2010
PLANS APPROVAL DATE

REGISTERED PROFESSIONAL ENGINEER
SYN YEE CHIN
No. 18186
Exp. 09/30/2011
ELECTRICAL
STATE OF CALIFORNIA

PB AMERICAS, Inc.
A Parsons Brinckerhoff Company
303 Second St., Suite 700N
San Francisco, CA 94107-1317

The State of California or its officers or agents shall not be responsible for the accuracy or completeness of electronic copies of this plan sheet.

Caltrans now has a web site! To get to the web site, go to http://www.dot.ca.gov

REQUEST FOR INFORMATION NOT ADDRESSED IN THIS CCO REMAIN IN FORCE

MARK	DATE	DESCRIPTIONS	BY	CH'D	CCO#
		REVISIONS			
0	03/08/10	MEP INTEGRATION	SYC	FW	110

CONTRACT CHANGE ORDER NO._____
SHEET _____ OF _____

Conduit/Tray No:	5942A	Reference:	E-836
Size:	103	Type:	Liquidtight flex metal conduit
From:	2T42	To:	TOS Splice Cable Tray (SP#18E)
Total Fill (mm2):	323.65	Remarks:	
Allowable Fill (mm2):	4339.96		
Description of Changes:			

Included Cable No.	Conductor Type	Area (mm2)
2475-4	72 Fiber, single mode fiber optic riser cable	323.65
Pull Rope	Soft-Fiber Polyester	0.00

Conduit/Tray No:	5942B	Reference:	E-836
Size:	103	Type:	Liquidtight flex metal conduit
From:	TOS Splice Cable Tray (SP#18E)	To:	2T42
Total Fill (mm2):	323.65	Remarks:	
Allowable Fill (mm2):	4339.96		
Description of Changes:			

Included Cable No.	Conductor Type	Area (mm2)
2475-4	72 Fiber, single mode fiber optic riser cable	323.65
Pull Rope	Soft-Fiber Polyester	0.00

Conduit/Tray No:	5962A	Reference:	E-836
Size:	103	Type:	Liquidtight flex metal conduit
From:	2T42	To:	TOS Splice Cable Tray (SP#20E)
Total Fill (mm2):	323.65	Remarks:	
Allowable Fill (mm2):	4339.96		
Description of Changes:			

Included Cable No.	Conductor Type	Area (mm2)
2475-4	72 Fiber, single mode fiber optic riser cable	323.65
Pull Rope	Soft-Fiber Polyester	0.00

Conduit/Tray No:	5962B	Reference:	E-836
Size:	103	Type:	Liquidtight flex metal conduit
From:	TOS Splice Cable Tray (SP#20E)	To:	2T42
Total Fill (mm2):	323.65	Remarks:	
Allowable Fill (mm2):	4339.96		
Description of Changes:			

Included Cable No.	Conductor Type	Area (mm2)
2475-4	72 Fiber, single mode fiber optic riser cable	323.65
Pull Rope	Soft-Fiber Polyester	0.00

Conduit/Tray No:	5972A	Reference:	E-836
Size:	103	Type:	Liquidtight flex metal conduit
From:	2T43	To:	TOS Splice Cable Tray (SP#21E)
Total Fill (mm2):	323.65	Remarks:	
Allowable Fill (mm2):	4339.96		
Description of Changes:			

Included Cable No.	Conductor Type	Area (mm2)
2475-4	72 Fiber, single mode fiber optic riser cable	323.65
Pull Rope	Soft-Fiber Polyester	0.00

Conduit/Tray No:	5972B	Reference:	E-836
Size:	103	Type:	Liquidtight flex metal conduit
From:	TOS Splice Cable Tray (SP#21E)	To:	2T43
Total Fill (mm2):	323.65	Remarks:	
Allowable Fill (mm2):	3275.44		
Description of Changes:			

Included Cable No.	Conductor Type	Area (mm2)
2475-4	72 Fiber, single mode fiber optic riser cable	323.65
Pull Rope	Soft-Fiber Polyester	0.00

Conduit/Tray No:	6502A	Reference:	E-663
Size:	103	Type:	Liquidtight flex metal conduit
From:	1T10	To:	15 kV Splice Cable Tray (Hinge AW)
Total Fill (mm2):	0.00	Remarks:	
Allowable Fill (mm2):	3275.44		
Description of Changes:			

Included Cable No.	Conductor Type	Area (mm2)
Pull Rope	Soft-Fiber Polyester	0.00

NEW
CONDUIT AND TRAY SCHEDULE

E-1039

CALCULATED/ DESIGNED BY	CHECKED BY
DATE 01/10	01/10
SYC	FW

MARK	DATE REVISED	REVISED BY

DESIGN OVERSIGHT
BEHZAD GOLEMOHAMMADI

STATE OF CALIFORNIA - DEPARTMENT OF TRANSPORTATION
Caltrans

THIS PLAN ACCURATE FOR ELECTRICAL WORK ONLY.

FOR REDUCED PLANS ORIGINAL SCALE IS IN MILLIMETERS 0 20 40 60 80

DGN FILE =>04-0120f1_E-1039.dgn
USERNAME =>llorico

CU 04251

EA 0120F1

LAST REVISION 00-00-00
DATE PLOTTED => 25-MAY-2010
TIME PLOTTED => 13:47

DIST	COUNTY	ROUTE	KILOMETER POST TOTAL PROJECT	SHEET No	TOTAL SHEETS
04	SF,Ala	80	12.2/14.3 0.0/4.0	407a 10S41	1204

Syn Yee Chin 03/08/10
REGISTERED ELECTRICAL ENGINEER DATE

05-06-2010
PLANS APPROVAL DATE

REGISTERED PROFESSIONAL ENGINEER — SYN YEE CHIN No. 18186 Exp. 09/30/2011 ELECTRICAL — STATE OF CALIFORNIA

PB AMERICAS, Inc.
A Parsons Brinckerhoff Company
303 Second St., Suite 700N
San Francisco, CA 94107-1317

The State of California or its officers or agents shall not be responsible for the accuracy or completeness of electronic copies of this plan sheet.

Caltrans now has a web site! To get to the web site, go to http://www.dot.ca.gov

REQUEST FOR INFORMATION NOT ADDRESSED IN THIS CCO REMAIN IN FORCE

MARK	DATE	DESCRIPTIONS	BY	CH'D	CCO#
0	03/08/10	MEP INTEGRATION	SYC	FW	110

REVISIONS

CONTRACT CHANGE ORDER NO.__________
SHEET _____ OF _____

Conduit/Tray No: 6502B | Reference: E-663
Size: 103 | Type: Liquidtight flex metal conduit
From: 15 kV Splice Cable Tray (Hinge AW) | To: 1T10
Total Fill (mm2): 2780.99 | Remarks:
Allowable Fill (mm2): 3275.44
Description of Changes:

Included Cable No.	Conductor Type	Area (mm2)
1391	3-1/C #4/0, 15 KV, EPR insulation	2780.99
Pull Rope	Soft-Fiber Polyester	0.00

Conduit/Tray No: 6523A | Reference: E-663
Size: 103 | Type: Liquidtight flex metal conduit
From: 1T40 | To: TOS Splice Cable Tray (Hinge AW)
Total Fill (mm2): 0.00 | Remarks:
Allowable Fill (mm2): 3275.44
Description of Changes:

Included Cable No.	Conductor Type	Area (mm2)
Pull Rope	Soft-Fiber Polyester	0.00

Conduit/Tray No: 6523B | Reference: E-663
Size: 103 | Type: Liquidtight flex metal conduit
From: TOS Splice Cable Tray (Hinge AW) | To: 1T40
Total Fill (mm2): 323.65 | Remarks:
Allowable Fill (mm2): 4339.96
Description of Changes:

Included Cable No.	Conductor Type	Area (mm2)
1475-4	72 Fiber, single mode fiber optic riser cable	323.65
Pull Rope	Soft-Fiber Polyester	0.00

Conduit/Tray No: 6523C | Reference: E-663
Size: 103 | Type: Liquidtight flex metal conduit
From: 1T40 | To: TOS Express Splice Cable Tray (Hinge AW)
Total Fill (mm2): 0.00 | Remarks:
Allowable Fill (mm2): 3275.44
Description of Changes:

Included Cable No.	Conductor Type	Area (mm2)
Pull Rope	Soft-Fiber Polyester	0.00

Conduit/Tray No: 6523D | Reference: E-663
Size: 103 | Type: Liquidtight flex metal conduit
From: TOS Express Splice Cable Tray (Hinge AW) | To: 1T40
Total Fill (mm2): 323.65 | Remarks:
Allowable Fill (mm2): 4339.96
Description of Changes:

Included Cable No.	Conductor Type	Area (mm2)
1477-3	72 Fiber, single mode fiber optic riser cable	323.65
Pull Rope	Soft-Fiber Polyester	0.00

Conduit/Tray No: 6530A | Reference: E-663
Size: 103 | Type: Liquidtight flex metal conduit
From: 1T10 | To: 15 kV Splice Cable Tray (Hinge BW)
Total Fill (mm2): 2780.99 | Remarks:
Allowable Fill (mm2): 3275.44
Description of Changes:

Included Cable No.	Conductor Type	Area (mm2)
1391	3-1/C #4/0, 15 KV, EPR insulation	2780.99
Pull Rope	Soft-Fiber Polyester	0.00

Conduit/Tray No: 6530B | Reference: E-663
Size: 103 | Type: Liquidtight flex metal conduit
From: 15 kV Splice Cable Tray (Hinge BW) | To: 1T10
Total Fill (mm2): 2780.99 | Remarks:
Allowable Fill (mm2): 3275.44
Description of Changes:

Included Cable No.	Conductor Type	Area (mm2)
1391	3-1/C #4/0, 15 KV, EPR insulation	2780.99
Pull Rope	Soft-Fiber Polyester	0.00

NEW
CONDUIT AND TRAY SCHEDULE

THIS PLAN ACCURATE FOR ELECTRICAL WORK ONLY.

STATE OF CALIFORNIA - DEPARTMENT OF TRANSPORTATION
DESIGN OVERSIGHT BEHZAD GOLEMOHAMMADI
CALCULATED/DESIGNED BY SYC
CHECKED BY FW
DATE 01/10
REVISED BY
DATE REVISED

DIST	COUNTY	ROUTE	KILOMETER POST TOTAL PROJECT	SHEET No	TOTAL SHEETS
04	SF, Ala	80	12.2/14.3 0.0/4.0	407a 10S42	1204

Syn Yee Chin 03/08/10
REGISTERED ELECTRICAL ENGINEER DATE

05-06-2010
PLANS APPROVAL DATE

REGISTERED PROFESSIONAL ENGINEER
SYN YEE CHIN
No. 18186
Exp. 09/30/2011
ELECTRICAL
STATE OF CALIFORNIA

PB AMERICAS, Inc.
A Parsons Brinckerhoff Company
303 Second St., Suite 700N
San Francisco, CA 94107-1317

The State of California or its officers or agents shall not be responsible for the accuracy or completeness of electronic copies of this plan sheet.

Caltrans now has a web site! To get to the web site, go to http://www.dot.ca.gov

REQUEST FOR INFORMATION NOT ADDRESSED IN THIS CCO REMAIN IN FORCE

MARK	DATE	REVISIONS DESCRIPTIONS	BY	CH'D	CCO#
0	03/08/10	MEP INTEGRATION	SYC	FW	110

CONTRACT CHANGE ORDER NO._____
SHEET _____ OF _____

Conduit/Tray No: 6586A | Reference: E-663
Size: 103 | Type: Liquidtight flex metal conduit
From: 1T11 | To: 15 kV Splice Cable Tray (Hinge CW)
Total Fill (mm2): 2780.99 | Remarks:
Allowable Fill (mm2): 3275.44
Description of Changes:

Included Cable No.	Conductor Type	Area (mm2)
1392	3-1/C #4/0, 15 KV, EPR insulation	2780.99
Pull Rope	Soft-Fiber Polyester	0.00

Conduit/Tray No: 6586B | Reference: E-663
Size: 103 | Type: Liquidtight flex metal conduit
From: 15 kV Splice Cable Tray (Hinge CW) | To: 1T11
Total Fill (mm2): 2780.99 | Remarks:
Allowable Fill (mm2): 3275.44
Description of Changes:

Included Cable No.	Conductor Type	Area (mm2)
1392	3-1/C #4/0, 15 KV, EPR insulation	2780.99
Pull Rope	Soft-Fiber Polyester	0.00

Conduit/Tray No: 6642A | Reference: E-663
Size: 103 | Type: Liquidtight flex metal conduit
From: 1T12 | To: 15 kV Splice Cable Tray (Hinge DW)
Total Fill (mm2): 2780.99 | Remarks:
Allowable Fill (mm2): 3275.44
Description of Changes:

Included Cable No.	Conductor Type	Area (mm2)
1392	3-1/C #4/0, 15 KV, EPR insulation	2780.99
Pull Rope	Soft-Fiber Polyester	0.00

Conduit/Tray No: 6642B | Reference: E-663
Size: 103 | Type: Liquidtight flex metal conduit
From: 15 kV Splice Cable Tray (Hinge DW) | To: 1T12
Total Fill (mm2): 2780.99 | Remarks:
Allowable Fill (mm2): 3275.44
Description of Changes:

Included Cable No.	Conductor Type	Area (mm2)
1392	3-1/C #4/0, 15 KV, EPR insulation	2780.99
Pull Rope	Soft-Fiber Polyester	0.00

Conduit/Tray No: 6936 | Reference: E-663
Size: 103 | Type: Liquidtight flex metal conduit
From: 1T13 | To: 15 kV Splice Cable Tray (Hinge EW)
Total Fill (mm2): 2780.99 | Remarks:
Allowable Fill (mm2): 3275.44
Description of Changes:

Included Cable No.	Conductor Type	Area (mm2)
1392	3-1/C #4/0, 15 KV, EPR insulation	2780.99
Pull Rope	Soft-Fiber Polyester	0.00

Conduit/Tray No: 6972A | Reference: E-663
Size: 103 | Type: Liquidtight flex metal conduit
From: 1T43 | To: TOS Splice Cable Tray (Hinge EW)
Total Fill (mm2): 323.65 | Remarks:
Allowable Fill (mm2): 4339.96
Description of Changes:

Included Cable No.	Conductor Type	Area (mm2)
1475-4	72 Fiber, single mode fiber optic riser cable	323.65
Pull Rope	Soft-Fiber Polyester	0.00

Conduit/Tray No: 6972B | Reference: E-663
Size: 103 | Type: Liquidtight flex metal conduit
From: TOS Splice Cable Tray (Hinge EW) | To: 1T43
Total Fill (mm2): 323.65 | Remarks:
Allowable Fill (mm2): 4339.96
Description of Changes:

Included Cable No.	Conductor Type	Area (mm2)
1475-5	72 Fiber, single mode fiber optic riser cable	323.65
Pull Rope	Soft-Fiber Polyester	0.00

NEW
CONDUIT AND TRAY SCHEDULE

E-1041

THIS PLAN ACCURATE FOR ELECTRICAL WORK ONLY.

FOR REDUCED PLANS ORIGINAL SCALE IS IN MILLIMETERS 0 20 40 60 80

DGN FILE =>04-0120f1_E-1041.dgn
USERNAME =>llorico

CU 04251 | EA 0120F1

DESIGN OVERSIGHT BEHZAD GOLEMOHAMMADI
CALCULATED/DESIGNED BY CHECKED BY
DATE 01/10 SYC FW
REVISED BY DATE REVISED
STATE OF CALIFORNIA - DEPARTMENT OF TRANSPORTATION Caltrans

LAST REVISION 00-00-00
DATE PLOTTED => 25-MAY-2010
TIME PLOTTED => 13:47

DIST	COUNTY	ROUTE	KILOMETER POST TOTAL PROJECT	SHEET No	TOTAL SHEETS
04	SF, Ala	80	12.2/14.3 0.0/4.0	407a 10S43	1204

Syn Yee Chin 03/08/10
REGISTERED ELECTRICAL ENGINEER DATE

05-06-2010
PLANS APPROVAL DATE

REGISTERED PROFESSIONAL ENGINEER
SYN YEE CHIN
No. 18186
Exp. 09/30/2011
ELECTRICAL
STATE OF CALIFORNIA

PB AMERICAS, Inc.
A Parsons Brinckerhoff Company
303 Second St., Suite 700N
San Francisco, CA 94107-1317

The State of California or its officers or agents shall not be responsible for the accuracy or completeness of electronic copies of this plan sheet.

Caltrans now has a web site! To get to the web site, go to http://www.dot.ca.gov

REQUEST FOR INFORMATION NOT ADDRESSED IN THIS CCO REMAIN IN FORCE

MARK	DATE	REVISIONS DESCRIPTIONS	BY	CH'D	CCO#
0	03/08/10	MEP INTEGRATION	SYC	FW	110

CONTRACT CHANGE ORDER NO._____
SHEET _____ OF _____

Conduit/Tray No:	6973A	Reference:	E-663
Size:	103	Type:	Liquidtight flex metal conduit
From:	1T43	To:	TOS Express Splice Cable Tray (Hinge EW)
Total Fill (mm2):	323.65	Remarks:	
Allowable Fill (mm2):	4339.96		
Description of Changes:			

Included Cable No.	Conductor Type	Area (mm2)
1477-3	72 Fiber, single mode fiber optic riser cable	323.65
Pull Rope	Soft-Fiber Polyester	0.00

Conduit/Tray No:	6973B	Reference:	E-663
Size:	103	Type:	Liquidtight flex metal conduit
From:	TOS Express Splice Cable Tray (Hinge EW)	To:	1T43
Total Fill (mm2):	323.65	Remarks:	
Allowable Fill (mm2):	4339.96		
Description of Changes:			

Included Cable No.	Conductor Type	Area (mm2)
1477-4	72 Fiber, single mode fiber optic riser cable	323.65
Pull Rope	Soft-Fiber Polyester	0.00

Conduit/Tray No:	7476A	Reference:	E-836
Size:	103	Type:	Liquidtight flex metal conduit
From:	2T40	To:	TOS Splice Cable Tray (Hinge AE)
Total Fill (mm2):	0.00	Remarks:	
Allowable Fill (mm2):	3275.44		
Description of Changes:			

Included Cable No.	Conductor Type	Area (mm2)
Pull Rope	Soft-Fiber Polyester	0.00

Conduit/Tray No:	7476B	Reference:	E-836
Size:	103	Type:	Liquidtight flex metal conduit
From:	TOS Splice Cable Tray (Hinge AE)	To:	2T40
Total Fill (mm2):	323.65	Remarks:	
Allowable Fill (mm2):	4339.96		
Description of Changes:			

Included Cable No.	Conductor Type	Area (mm2)
2475-4	72 Fiber, single mode fiber optic riser cable	323.65
Pull Rope	Soft-Fiber Polyester	0.00

Conduit/Tray No:	7492A	Reference:	E-836
Size:	103	Type:	Liquidtight flex metal conduit
From:	2T10	To:	15 kV Splice Cable Tray (Hinge AE)
Total Fill (mm2):	0.00	Remarks:	
Allowable Fill (mm2):	3275.44		
Description of Changes:			

Included Cable No.	Conductor Type	Area (mm2)
Pull Rope	Soft-Fiber Polyester	0.00

Conduit/Tray No:	7492B	Reference:	E-836
Size:	103	Type:	Liquidtight flex metal conduit
From:	15 kV Splice Cable Tray (Hinge AE)	To:	2T10
Total Fill (mm2):	2780.99	Remarks:	
Allowable Fill (mm2):	3275.44		
Description of Changes:			

Included Cable No.	Conductor Type	Area (mm2)
2391	3-1/C #4/0, 15 KV, EPR insulation	2780.99
Pull Rope	Soft-Fiber Polyester	0.00

Conduit/Tray No:	7676A	Reference:	E-836
Size:	103	Type:	Liquidtight flex metal conduit
From:	2T43	To:	TOS Splice Cable Tray (Hinge EE)
Total Fill (mm2):	0.00	Remarks:	
Allowable Fill (mm2):	3275.44		
Description of Changes:			

Included Cable No.	Conductor Type	Area (mm2)
Pull Rope	Soft-Fiber Polyester	0.00

NEW
CONDUIT AND TRAY SCHEDULE

E-1042

REVISED BY	DATE REVISED
DATE 01/10	01/10
SYC	FW
CALCULATED/ DESIGNED BY	CHECKED BY

DESIGN OVERSIGHT
BEHZAD GOLEMOHAMMADI

STATE OF CALIFORNIA - DEPARTMENT OF TRANSPORTATION
Caltrans

THIS PLAN ACCURATE FOR ELECTRICAL WORK ONLY.

LAST REVISION 00-00-00
DATE PLOTTED => 25-MAY-2010
TIME PLOTTED => 13:47

FOR REDUCED PLANS ORIGINAL SCALE IS IN MILLIMETERS 0 20 40 60 80

DGN FILE =>04-0120f1_E-1042.dgn
USERNAME =>llorico

CU 04251

EA 0120F1

DIST	COUNTY	ROUTE	KILOMETER POST TOTAL PROJECT	SHEET No	TOTAL SHEETS
04	SF,Ala	80	12.2/14.3 0.0/4.0	407a 10S44	1204

Syn Yee Chin 03/08/10
REGISTERED ELECTRICAL ENGINEER DATE

05-06-2010
PLANS APPROVAL DATE

REGISTERED PROFESSIONAL ENGINEER SYN YEE CHIN No. 18186 Exp. 09/30/2011 ELECTRICAL STATE OF CALIFORNIA

PB AMERICAS, Inc.
A Parsons Brinckerhoff Company
303 Second St., Suite 700N
San Francisco, CA 94107-1317

The State of California or its officers or agents shall not be responsible for the accuracy or completeness of electronic copies of this plan sheet.

Caltrans now has a web site! To get to the web site, go to http://www.dot.ca.gov

Caltrans Metric

REQUEST FOR INFORMATION NOT ADDRESSED IN THIS CCO REMAIN IN FORCE

MARK	DATE	DESCRIPTIONS	BY	CH'D	CCO#
0	03/08/10	MEP INTEGRATION	SYC	FW	110

REVISIONS

CONTRACT CHANGE ORDER NO._____
SHEET _____ OF _____

Conduit/Tray No:	7676B	Reference:	E-836
Size:	103	Type:	Liquidtight flex metal conduit
From:	TOS Splice Cable Tray (Hinge EE)	To:	2T43
Total Fill (mm2):	0.00	Remarks:	
Allowable Fill (mm2):	3275.44		
Description of Changes:			

Included Cable No.	Conductor Type	Area (mm2)
Pull Rope	Soft-Fiber Polyester	0.00

Conduit/Tray No:	7681	Reference:	E-836
Size:	103	Type:	Liquidtight flex metal conduit
From:	2T13	To:	15 kV Splice Cable Tray (Hinge EE)
Total Fill (mm2):	2780.99	Remarks:	
Allowable Fill (mm2):	3275.44		
Description of Changes:			

Included Cable No.	Conductor Type	Area (mm2)
2392	3-1/C #4/0, 15 KV, EPR insulation	2780.99
Pull Rope	Soft-Fiber Polyester	0.00

Conduit/Tray No:	7926A	Reference:	E-836
Size:	103	Type:	Liquidtight flex metal conduit
From:	2T12	To:	15 kV Splice Cable Tray (Hinge DE)
Total Fill (mm2):	2780.99	Remarks:	
Allowable Fill (mm2):	3275.44		
Description of Changes:			

Included Cable No.	Conductor Type	Area (mm2)
2392	3-1/C #4/0, 15 KV, EPR insulation	2780.99
Pull Rope	Soft-Fiber Polyester	0.00

Conduit/Tray No:	7926B	Reference:	E-836
Size:	103	Type:	Liquidtight flex metal conduit
From:	15 kV Splice Cable Tray (Hinge DE)	To:	2T12
Total Fill (mm2):	2780.99	Remarks:	
Allowable Fill (mm2):	3275.44		
Description of Changes:			

Included Cable No.	Conductor Type	Area (mm2)
2392	3-1/C #4/0, 15 KV, EPR insulation	2780.99
Pull Rope	Soft-Fiber Polyester	0.00

NEW
CONDUIT AND TRAY SCHEDULE

E-1043

THIS PLAN ACCURATE FOR ELECTRICAL WORK ONLY.

STATE OF CALIFORNIA - DEPARTMENT OF TRANSPORTATION
Caltrans

DESIGN OVERSIGHT: BEHZAD GOLEMOHAMMADI

CALCULATED/DESIGNED BY: SYC DATE 01/10
CHECKED BY: FW 01/10
REVISED BY
DATE REVISED

DATE PLOTTED => 25-MAY-2010
TIME PLOTTED => 13:47
LAST REVISION 00-00-00

FOR REDUCED PLANS ORIGINAL SCALE IS IN MILLIMETERS 0 20 40 60 80

DGN FILE =>04-0120f1_E-1043.dgn
USERNAME =>llorico

CU 04251 EA 0120F1

DIST	COUNTY	ROUTE	KILOMETER POST TOTAL PROJECT	SHEET No	TOTAL SHEETS
04	SF, Ala	80	12.2/14.3 0.0/4.0	407a 10S10	1204

REGISTERED ELECTRICAL ENGINEER — DATE 03/08/10

05-06-2010
PLANS APPROVAL DATE

REGISTERED PROFESSIONAL ENGINEER — SYN YEE CHIN — No. 18186 — Exp. 09/30/2011 — ELECTRICAL — STATE OF CALIFORNIA

PB AMERICAS, Inc.
A Parsons Brinckerhoff Company
303 Second St., Suite 700N
San Francisco, CA 94107-1317

The State of California or its officers or agents shall not be responsible for the accuracy or completeness of electronic copies of this plan sheet.

Caltrans now has a web site! To get to the web site, go to http://www.dot.ca.gov

Caltrans Metric

REQUEST FOR INFORMATION NOT ADDRESSED IN THIS CCO REMAIN IN FORCE

MARK	DATE	DESCRIPTIONS	BY	CH'D	CCO#
0	03/08/10	MEP INTEGRATION	SYC	FW	110

REVISIONS

CONTRACT CHANGE ORDER NO.________
SHEET _____ OF _____

Conduit/Tray No:	2T41
Reference:	E-805 to E-810, E-823A, E-829A
Size:	305
Type:	152 mm siderail solid bottom tray
From:	Hinge BE
To:	Hinge CE
Total Fill (mm2):	7684.86
Remarks:	Installed in Skyway contract. All cables are existing except 72 and 12 Fiber.
Allowable Fill (mm2):	19354.80
Description of Changes:	

Included Cable No.	Conductor Type	Area (mm2)
2473-14	50 pair #18, shielded pairs, IS/OS shield 600 V, XLPE insul., PVC jacket	1201.71
2473-15	50 pair #18, shielded pairs, IS/OS shield 600 V, XLPE insul., PVC jacket	1201.71
2473-16	50 pair #18, shielded pairs, IS/OS shield 600 V, XLPE insul., PVC jacket	1201.71
2473-17	50 pair #18, shielded pairs, IS/OS shield 600 V, XLPE insul., PVC jacket	1201.71
2473-18	50 pair #18, shielded pairs, IS/OS shield 600 V, XLPE insul., PVC jacket	1201.71
2473-23	50 pair #18, shielded pairs, IS/OS shield 600 V, XLPE insul., PVC jacket	1201.71
2475-4	72 Fiber, single mode fiber optic riser cable	323.65
2475-4E	12 Fiber, single mode fiber optic cable	30.19
2475-4F1	12 Fiber, single mode fiber optic cable	30.19
2475-4F2	12 Fiber, single mode fiber optic cable	30.19
2475-4G	12 Fiber, single mode fiber optic cable	30.19
2475-4H	12 Fiber, single mode fiber optic cable	30.19

Conduit/Tray No:	2T42
Reference:	E-810 to E-814, E-829A, E-833A
Size:	305
Type:	152 mm siderail solid bottom tray
From:	Hinge CE
To:	Hinge DE
Total Fill (mm2):	6422.77
Remarks:	Installed in Skyway contract. All cables are existing except 72 and 12 Fiber.
Allowable Fill (mm2):	19354.80
Description of Changes:	

Included Cable No.	Conductor Type	Area (mm2)
2473-18	50 pair #18, shielded pairs, IS/OS shield 600 V, XLPE insul., PVC jacket	1201.71
2473-19	50 pair #18, shielded pairs, IS/OS shield 600 V, XLPE insul., PVC jacket	1201.71
2473-20	50 pair #18, shielded pairs, IS/OS shield 600 V, XLPE insul., PVC jacket	1201.71
2473-21	50 pair #18, shielded pairs, IS/OS shield 600 V, XLPE insul., PVC jacket	1201.71
2473-22	50 pair #18, shielded pairs, IS/OS shield 600 V, XLPE insul., PVC jacket	1201.71
2475-4	72 Fiber, single mode fiber optic riser cable	323.65
2475-4I	12 Fiber, single mode fiber optic cable	30.19
2475-4J	12 Fiber, single mode fiber optic cable	30.19
2475-4K	12 Fiber, single mode fiber optic cable	30.19

Conduit/Tray No:	2T43
Reference:	E-815, E-816
Size:	305
Type:	152 mm siderail solid bottom tray
From:	Hinge DE
To:	Hinge EE Girder Interface
Total Fill (mm2):	1879.20
Remarks:	Installed in Skyway contract. All cables are existing except 72 and 12 Fiber.
Allowable Fill (mm2):	19354.80
Description of Changes:	

Included Cable No.	Conductor Type	Area (mm2)
2473-22	50 pair #18, shielded pairs, IS/OS shield 600 V, XLPE insul., PVC jacket	1201.71
2475-4	72 Fiber, single mode fiber optic riser cable	323.65
2475-4L	12 Fiber, single mode fiber optic cable	30.19

Conduit/Tray No:	4012
Reference:	E-638
Size:	41
Type:	RGS-PVC coated conduit
From:	PB-2B
To:	Controller Cabinet #TOS-09WA
Total Fill (mm2):	30.19
Remarks:	Installed in Skyway contract.
Allowable Fill (mm2):	702.80
Description of Changes:	

Included Cable No.	Conductor Type	Area (mm2)
1475-4A	12 Fiber, single mode fiber optic cable	30.19
Pull Rope	Soft-Fiber Polyester	0.00

Conduit/Tray No:	4032
Reference:	E-639
Size:	41
Type:	RGS-PVC coated conduit
From:	PB-2B
To:	Controller Cabinet #TOS-10WA
Total Fill (mm2):	30.19
Remarks:	Installed in Skyway contract.
Allowable Fill (mm2):	702.80
Description of Changes:	

Included Cable No.	Conductor Type	Area (mm2)
1475-4B	12 Fiber, single mode fiber optic cable	30.19
Pull Rope	Soft-Fiber Polyester	0.00

EXISTING
CONDUIT AND TRAY SCHEDULE

THIS PLAN ACCURATE FOR ELECTRICAL WORK ONLY.

E-1009

STATE OF CALIFORNIA - DEPARTMENT OF TRANSPORTATION
Caltrans

DESIGN OVERSIGHT: BEHZAD GOLEMOHAMMADI

CALCULATED/DESIGNED BY	SYC	DATE 01/10	REVISED BY
CHECKED BY	FW	01/10	DATE REVISED

FOR REDUCED PLANS ORIGINAL SCALE IS IN MILLIMETERS 0 20 40 60 80

DGN FILE =>04-0120f1_E-1009.dgn
USERNAME =>llorico

CU 04251
EA 0120F1

DATE PLOTTED => 06-MAY-2010
TIME PLOTTED => 18:44
LAST REVISION 00-00-00

Conduit/Tray No:	4052	Reference:	E-640
Size:	41	Type:	RGS-PVC coated conduit
From:	PB-2B	To:	Junction Box
Total Fill (mm2):	60.38	Remarks:	Installed in Skyway contract.
Allowable Fill (mm2):	414.28		
Description of Changes:			

Included Cable No.	Conductor Type	Area (mm2)
1475-4C1	12 Fiber, single mode fiber optic cable	30.19
1475-4C2	12 Fiber, single mode fiber optic cable	30.19
Pull Rope	Soft-Fiber Polyester	0.00

Conduit/Tray No:	4058	Reference:	E-640
Size:	41	Type:	RGS-PVC coated conduit
From:	Junction Box	To:	Controller Cabinet #TOS-11WA
Total Fill (mm2):	30.19	Remarks:	Installed in Skyway contract.
Allowable Fill (mm2):	702.80		
Description of Changes:			

Included Cable No.	Conductor Type	Area (mm2)
1475-4C1	12 Fiber, single mode fiber optic cable	30.19
Pull Rope	Soft-Fiber Polyester	0.00

Conduit/Tray No:	4060	Reference:	E-640
Size:	41	Type:	RGS-PVC coated conduit
From:	Junction Box	To:	Controller Cabinet #TOS-11WB
Total Fill (mm2):	30.19	Remarks:	Installed in Skyway contract.
Allowable Fill (mm2):	702.80		
Description of Changes:			

Included Cable No.	Conductor Type	Area (mm2)
1475-4C2	12 Fiber, single mode fiber optic cable	30.19
Pull Rope	Soft-Fiber Polyester	0.00

Conduit/Tray No:	4082	Reference:	E-641
Size:	41	Type:	RGS-PVC coated conduit
From:	PB-2B	To:	Controller Cabinet #TOS-12WA
Total Fill (mm2):	30.19	Remarks:	Installed in Skyway contract.
Allowable Fill (mm2):	702.80		
Description of Changes:			

Included Cable No.	Conductor Type	Area (mm2)
1475-4D	12 Fiber, single mode fiber optic cable	30.19
Pull Rope	Soft-Fiber Polyester	0.00

THIS PLAN ACCURATE FOR ELECTRICAL WORK ONLY.

REVISED BY | DATE REVISED
SYC | 03/10
FW | 03/10
CALCULATED/ DESIGNED BY | CHECKED BY

DESIGN OVERSIGHT
BEHZAD GOLEMOHAMMADI

STATE OF CALIFORNIA - DEPARTMENT OF TRANSPORTATION
Caltrans

REQUEST FOR INFORMATION NOT ADDRESSED IN THIS CCO REMAIN IN FORCE

MARK	DATE	DESCRIPTIONS	BY	CH'D	CCO#
		REVISIONS			
0	03/08/10	MEP INTEGRATION	SYC	FW	110

CONTRACT CHANGE ORDER NO._____
SHEET _____ OF _____

Caltrans Metric

DIST	COUNTY	ROUTE	KILOMETER POST TOTAL PROJECT	SHEET No	TOTAL SHEETS
04	SF, Ala	80	12.2/14.3 0.0/4.0	407a 10S11	1204

Syn Yee Chin 03/08/10
REGISTERED ELECTRICAL ENGINEER DATE

05-06-2010
PLANS APPROVAL DATE

REGISTERED PROFESSIONAL ENGINEER
SYN YEE CHIN
No. 18186
Exp. 09/30/2011
ELECTRICAL
STATE OF CALIFORNIA

PB AMERICAS, Inc.
A Parsons Brinckerhoff Company
303 Second St., Suite 700N
San Francisco, CA 94107-1317

The State of California or its officers or agents shall not be responsible for the accuracy or completeness of electronic copies of this plan sheet.

Caltrans now has a web site! To get to the web site, go to http://www.dot.ca.gov

Conduit/Tray No:	4102	Reference:	E-643
Size:	41	Type:	RGS-PVC coated conduit
From:	PB-2B	To:	Controller Cabinet #TOS-13WA
Total Fill (mm2):	30.19	Remarks:	Installed in Skyway contract.
Allowable Fill (mm2):	702.80		
Description of Changes:			

Included Cable No.	Conductor Type	Area (mm2)
1475-4E	12 Fiber, single mode fiber optic cable	30.19
Pull Rope	Soft-Fiber Polyester	0.00

Conduit/Tray No:	4142	Reference:	E-646
Size:	41	Type:	RGS-PVC coated conduit
From:	PB-2B	To:	Controller Cabinet #TOS-15WA
Total Fill (mm2):	30.19	Remarks:	Installed in Skyway contract.
Allowable Fill (mm2):	702.80		
Description of Changes:			

Included Cable No.	Conductor Type	Area (mm2)
1475-4F	12 Fiber, single mode fiber optic cable	30.19
Pull Rope	Soft-Fiber Polyester	0.00

Conduit/Tray No:	4162	Reference:	E-647
Size:	41	Type:	RGS-PVC coated conduit
From:	PB-2B	To:	Controller Cabinet #TOS-16WA
Total Fill (mm2):	30.19	Remarks:	Installed in Skyway contract.
Allowable Fill (mm2):	702.80		
Description of Changes:			

Included Cable No.	Conductor Type	Area (mm2)
1475-4G	12 Fiber, single mode fiber optic cable	30.19
Pull Rope	Soft-Fiber Polyester	0.00

EXISTING
CONDUIT AND TRAY SCHEDULE

E-1010

LAST REVISION 00-00-00
DATE PLOTTED => 06-MAY-2010
TIME PLOTTED => 18:44

FOR REDUCED PLANS ORIGINAL SCALE IS IN MILLIMETERS 0 20 40 60 80
DGN FILE =>04-0120f1_E-1010.dgn
USERNAME =>llorico
CU 04251
EA 0120F1

Conduit/Tray No:	4187	Reference:	E-649
Size:	41	Type:	RGS-PVC coated conduit
From:	PB-2B	To:	Controller Cabinet #TOS-17WA
Total Fill (mm2):	30.19	Remarks:	Installed in Skyway contract.
Allowable Fill (mm2):	702.80		
Description of Changes:			

Included Cable No.	Conductor Type	Area (mm2)
1475-4H	12 Fiber, single mode fiber optic cable	30.19
Pull Rope	Soft-Fiber Polyester	0.00

Conduit/Tray No:	4213	Reference:	E-650
Size:	41	Type:	RGS-PVC coated conduit
From:	PB-2B	To:	Controller Cabinet #TOS-18WA
Total Fill (mm2):	60.38	Remarks:	Installed in Skyway contract.
Allowable Fill (mm2):	414.28		
Description of Changes:			

Included Cable No.	Conductor Type	Area (mm2)
1475-4I1	12 Fiber, single mode fiber optic cable	30.19
1475-4I2	12 Fiber, single mode fiber optic cable	30.19
Pull Rope	Soft-Fiber Polyester	0.00

Conduit/Tray No:	4257	Reference:	E-652
Size:	41	Type:	RGS-PVC coated conduit
From:	PB-2B	To:	Controller Cabinet #TOS-20WA
Total Fill (mm2):	30.19	Remarks:	Installed in Skyway contract.
Allowable Fill (mm2):	702.80		
Description of Changes:			

Included Cable No.	Conductor Type	Area (mm2)
1475-4J	12 Fiber, single mode fiber optic cable	30.19
Pull Rope	Soft-Fiber Polyester	0.00

Conduit/Tray No:	4276	Reference:	E-654
Size:	41	Type:	RGS-PVC coated conduit
From:	PB-2B	To:	Controller Cabinet #TOS-21WA
Total Fill (mm2):	30.19	Remarks:	Installed in Skyway contract.
Allowable Fill (mm2):	702.80		
Description of Changes:			

Included Cable No.	Conductor Type	Area (mm2)
1475-4K	12 Fiber, single mode fiber optic cable	30.19
Pull Rope	Soft-Fiber Polyester	0.00

THIS PLAN ACCURATE FOR ELECTRICAL WORK ONLY.

REVISED BY | DATE REVISED
DATE 01/10 | 01/10
SYC | FW
CALCULATED/ DESIGNED BY | CHECKED BY
DESIGN OVERSIGHT: BEHZAD GOLEMOHAMMADI

STATE OF CALIFORNIA - DEPARTMENT OF TRANSPORTATION
Caltrans

REQUEST FOR INFORMATION NOT ADDRESSED IN THIS CCO REMAIN IN FORCE

MARK	DATE	DESCRIPTIONS	BY	CH'D	CCO#
		REVISIONS			
0	03/08/10	MEP INTEGRATION	SYC	FW	110

CONTRACT CHANGE ORDER NO._____
SHEET _____ OF _____

Caltrans Metric

DIST	COUNTY	ROUTE	KILOMETER POST TOTAL PROJECT	SHEET No	TOTAL SHEETS
04	SF, Ala	80	12.2/14.3 0.0/4.0	407a 10S12	1204

Syn Yee Chin 03/08/10
REGISTERED ELECTRICAL ENGINEER DATE

05-06-2010
PLANS APPROVAL DATE

REGISTERED PROFESSIONAL ENGINEER
SYN YEE CHIN
No. 18186
Exp. 09/30/2011
ELECTRICAL
STATE OF CALIFORNIA

PB AMERICAS, Inc.
A Parsons Brinckerhoff Company
303 Second St., Suite 700N
San Francisco, CA 94107-1317

The State of California or its officers or agents shall not be responsible for the accuracy or completeness of electronic copies of this plan sheet.

Caltrans now has a web site! To get to the web site, go to http://www.dot.ca.gov

Conduit/Tray No:	4302	Reference:	E-617, E-656, E-657
Size:	103	Type:	RGS conduit
From:	15kV Vault @ Pier E17L	To:	15kV Vault @ Pier E18L
Total Fill (mm2):	2780.99	Remarks:	Installed in OTD-1 contract.
Allowable Fill (mm2):	3324.51		
Description of Changes:			

Included Cable No.	Conductor Type	Area (mm2)
1392	3-1/C #4/0, 15 KV, EPR insulation	2780.99
Pull Rope	Soft-Fiber Polyester	0.00

Conduit/Tray No:	4315	Reference:	E-618, E-657, E-659
Size:	103	Type:	RGS conduit
From:	15kV Vault @ Pier E18L	To:	15kV Vault @ Hinge FW
Total Fill (mm2):	2780.99	Remarks:	Installed in OTD-1 contract.
Allowable Fill (mm2):	3324.51		
Description of Changes:			

Included Cable No.	Conductor Type	Area (mm2)
1392	3-1/C #4/0, 15 KV, EPR insulation	2780.99
Pull Rope	Soft-Fiber Polyester	0.00

EXISTING
CONDUIT AND TRAY SCHEDULE

E-1011

LAST REVISION 00-00-00
DATE PLOTTED => 06-MAY-2010
TIME PLOTTED => 18:44

FOR REDUCED PLANS ORIGINAL SCALE IS IN MILLIMETERS 0 20 40 60 80

DGN FILE =>04-0120f1_E-1011.dgn
USERNAME =>llorico

CU 04251 | EA 0120F1

DIST	COUNTY	ROUTE	KILOMETER POST TOTAL PROJECT	SHEET No	TOTAL SHEETS
04	SF, Ala	80	12.2/14.3 0.0/4.0	407a 10S13	1204

Syn Yee Chin 03/08/10
REGISTERED ELECTRICAL ENGINEER DATE

05-06-2010
PLANS APPROVAL DATE

REGISTERED PROFESSIONAL ENGINEER
SYN YEE CHIN
No. 18186
Exp. 09/30/2011
ELECTRICAL
STATE OF CALIFORNIA

PB AMERICAS, Inc.
A Parsons Brinckerhoff Company
303 Second St., Suite 700N
San Francisco, CA 94107-1317

The State of California or its officers or agents shall not be responsible for the accuracy or completeness of electronic copies of this plan sheet.

Caltrans now has a web site! To get to the web site, go to http://www.dot.ca.gov

REQUEST FOR INFORMATION NOT ADDRESSED IN THIS CCO REMAIN IN FORCE

MARK	DATE	REVISIONS DESCRIPTIONS	BY	CH'D	CCO#
0	03/08/10	MEP INTEGRATION	SYC	FW	110

CONTRACT CHANGE ORDER NO._____
SHEET _____ OF _____

Conduit/Tray No: 4330 Reference: E-618, E-619, E-659, E-660, E-662
Size: 103 Type: RGS conduit
From: 15kV Vault @ Hinge FW To: 15kV Vault @ Pier E22L
Total Fill (mm2): 2780.99 Remarks: Installed in OTD-1 contract.
Allowable Fill (mm2): 3324.51
Description of Changes:

Included Cable No.	Conductor Type	Area (mm2)
1392	3-1/C #4/0, 15 KV, EPR insulation	2780.99
Pull Rope	Soft-Fiber Polyester	0.00

Conduit/Tray No: 4364 Reference: E-619, E-620, E-662
Size: 103 Type: RGS conduit
From: TOS/COM Vault @ Pier E22L To: 1T25
Total Fill (mm2): 323.65 Remarks: Installed in OTD-1 contract.
Allowable Fill (mm2): 3324.51
Description of Changes:

Included Cable No.	Conductor Type	Area (mm2)
1475-7	72 Fiber, single mode fiber optic riser cable inside innerduct	323.65
Pull Rope	Soft-Fiber Polyester	0.00
Spare Innerduct	25.4mm Smoothwall Innerduct	0.00
Spare Innerduct	25.4mm Smoothwall Innerduct	0.00
Spare Innerduct	25.4mm Smoothwall Innerduct	0.00
Spare Innerduct	25.4mm Smoothwall Innerduct	0.00

Conduit/Tray No: 4370 Reference: E-617, E-656, E-657
Size: 103 Type: RGS conduit
From: TOS/COM Vault @ Pier E17L To: TOS/COM Vault @ Pier E18L
Total Fill (mm2): 323.65 Remarks: Installed in OTD-1 contract.
Allowable Fill (mm2): 3324.51
Description of Changes:

Included Cable No.	Conductor Type	Area (mm2)
1477-4	72 Fiber, single mode fiber optic riser cable inside innerduct	323.65
Pull Rope	Soft-Fiber Polyester	0.00
Spare Innerduct	25.4mm Smoothwall Innerduct	0.00
Spare Innerduct	25.4mm Smoothwall Innerduct	0.00
Spare Innerduct	25.4mm Smoothwall Innerduct	0.00

Conduit/Tray No: 4371 Reference: E-618, E-657, E-659
Size: 103 Type: RGS conduit
From: TOS/COM Vault @ Pier E18L To: TOS/COM Vault @ Hinge FW
Total Fill (mm2): 323.65 Remarks: Installed in OTD-1 contract.
Allowable Fill (mm2): 3324.51
Description of Changes:

Included Cable No.	Conductor Type	Area (mm2)
1477-4	72 Fiber, single mode fiber optic riser cable inside innerduct	323.65
Pull Rope	Soft-Fiber Polyester	0.00
Spare Innerduct	25.4mm Smoothwall Innerduct	0.00
Spare Innerduct	25.4mm Smoothwall Innerduct	0.00
Spare Innerduct	25.4mm Smoothwall Innerduct	0.00

Conduit/Tray No: 4372 Reference: E-618, E-619, E-659, E-660, E-662
Size: 103 Type: RGS conduit
From: TOS/COM Vault @ Hinge FW To: TOS/COM Vault @ Pier E22L
Total Fill (mm2): 323.65 Remarks: Installed in OTD-1 contract.
Allowable Fill (mm2): 3324.51
Description of Changes:

Included Cable No.	Conductor Type	Area (mm2)
1477-4	72 Fiber, single mode fiber optic riser cable inside innerduct	323.65
Pull Rope	Soft-Fiber Polyester	0.00
Spare Innerduct	25.4mm Smoothwall Innerduct	0.00
Spare Innerduct	25.4mm Smoothwall Innerduct	0.00
Spare Innerduct	25.4mm Smoothwall Innerduct	0.00

EXISTING
CONDUIT AND TRAY SCHEDULE

E-1012

THIS PLAN ACCURATE FOR ELECTRICAL WORK ONLY.

REVISED BY	DATE REVISED
SYC	01/10
FW	01/10

CALCULATED/DESIGNED BY
CHECKED BY

DESIGN OVERSIGHT
BEHZAD GOLEMOHAMMADI

STATE OF CALIFORNIA - DEPARTMENT OF TRANSPORTATION
Caltrans

LAST REVISION 00-00-00
DATE PLOTTED => 06-MAY-2010
TIME PLOTTED => 18:44

FOR REDUCED PLANS ORIGINAL SCALE IS IN MILLIMETERS 0 20 40 60 80

DGN FILE =>04-0120f1_E-1012.dgn
USERNAME =>llorico

CU 04251

EA 0120F1

DIST	COUNTY	ROUTE	KILOMETER POST TOTAL PROJECT	SHEET No	TOTAL SHEETS
04	SF, Ala	80	12.2/14.3 0.0/4.0	407a 10S14	1204

Caltrans Metric

Syn Yee Chin 03/08/10
REGISTERED ELECTRICAL ENGINEER DATE

05-06-2010
PLANS APPROVAL DATE

REGISTERED PROFESSIONAL ENGINEER
SYN YEE CHIN
No. 18186
Exp. 09/30/2011
ELECTRICAL
STATE OF CALIFORNIA

PB AMERICAS, Inc.
A Parsons Brinckerhoff Company
303 Second St., Suite 700N
San Francisco, CA 94107-1317

The State of California or its officers or agents shall not be responsible for the accuracy or completeness of electronic copies of this plan sheet.

Caltrans now has a web site! To get to the web site, go to http://www.dot.ca.gov

REQUEST FOR INFORMATION NOT ADDRESSED IN THIS CCO REMAIN IN FORCE

MARK	DATE	DESCRIPTIONS	BY	CH'D	CCO#
		REVISIONS			
0	03/08/10	MEP INTEGRATION	SYC	FW	110

CONTRACT CHANGE ORDER NO. _____
SHEET _____ OF _____

Conduit/Tray No:	4374	Reference:	E-619, E-620, E-662
Size:	103	Type:	RGS conduit
From:	TOS/COM Vault @ Pier E22L	To:	1T25
Total Fill (mm2):	323.65	Remarks:	Installed in OTD-1 contract.
Allowable Fill (mm2):	3324.51		
Description of Changes:			

Included Cable No.	Conductor Type	Area (mm2)
1477-4	72 Fiber, single mode fiber optic riser cable inside innerduct	323.65
Pull Rope	Soft-Fiber Polyester	0.00
Spare Innerduct	25.4mm Smoothwall Innerduct	0.00
Spare Innerduct	25.4mm Smoothwall Innerduct	0.00
Spare Innerduct	25.4mm Smoothwall Innerduct	0.00

Conduit/Tray No:	4379	Reference:	E-618, E-657
Size:	103	Type:	RGS conduit
From:	TOS/COM Vault @ Pier E18L	To:	TOS/COM cell @ Pier E18L
Total Fill (mm2):	323.65	Remarks:	Installed in OTD-1 contract.
Allowable Fill (mm2):	3324.51		
Description of Changes:			

Included Cable No.	Conductor Type	Area (mm2)
1475-5	72 Fiber, single mode fiber optic riser cable inside innerduct	323.65
Pull Rope	Soft-Fiber Polyester	0.00
Spare Innerduct	25.4mm Smoothwall Innerduct	0.00
Spare Innerduct	25.4mm Smoothwall Innerduct	0.00
Spare Innerduct	25.4mm Smoothwall Innerduct	0.00

Conduit/Tray No:	4380	Reference:	E-617, E-656, E-657
Size:	103	Type:	RGS conduit
From:	TOS/COM Vault @ Pier E17L	To:	TOS/COM Vault @ Pier E18L
Total Fill (mm2):	323.65	Remarks:	Installed in OTD-1 contract.
Allowable Fill (mm2):	3324.51		
Description of Changes:			

Included Cable No.	Conductor Type	Area (mm2)
1475-5	72 Fiber, single mode fiber optic riser cable inside innerduct	323.65
Pull Rope	Soft-Fiber Polyester	0.00
Spare Innerduct	25.4mm Smoothwall Innerduct	0.00
Spare Innerduct	25.4mm Smoothwall Innerduct	0.00
Spare Innerduct	25.4mm Smoothwall Innerduct	0.00

Conduit/Tray No:	4381	Reference:	E-618, E-657, E-659
Size:	103	Type:	RGS conduit
From:	TOS/COM cell @ Pier E18L	To:	TOS/COM Vault @ Hinge FW
Total Fill (mm2):	323.65	Remarks:	Installed in OTD-1 contract.
Allowable Fill (mm2):	3324.51		
Description of Changes:			

Included Cable No.	Conductor Type	Area (mm2)
1475-6	72 Fiber, single mode fiber optic riser cable inside innerduct	323.65
Pull Rope	Soft-Fiber Polyester	0.00
Spare Innerduct	25.4mm Smoothwall Innerduct	0.00
Spare Innerduct	25.4mm Smoothwall Innerduct	0.00
Spare Innerduct	25.4mm Smoothwall Innerduct	0.00

Conduit/Tray No:	4382	Reference:	E-618, E-619, E-659, E-660
Size:	103	Type:	RGS conduit
From:	TOS/COM Vault @ Hinge FW	To:	TOS/COM cell @ Pier E21L
Total Fill (mm2):	323.65	Remarks:	Installed in OTD-1 contract.
Allowable Fill (mm2):	3324.51		
Description of Changes:			

Included Cable No.	Conductor Type	Area (mm2)
1475-6	72 Fiber, single mode fiber optic riser cable inside innerduct	323.65
Pull Rope	Soft-Fiber Polyester	0.00
Spare Innerduct	25.4mm Smoothwall Innerduct	0.00
Spare Innerduct	25.4mm Smoothwall Innerduct	0.00
Spare Innerduct	25.4mm Smoothwall Innerduct	0.00

EXISTING
CONDUIT AND TRAY SCHEDULE

E-1013

REVISED BY	DATE REVISED
SYC	01/10

CALCULATED/DESIGNED BY
CHECKED BY
FW

DESIGN OVERSIGHT
BEHZAD GOLEMOHAMMADI

STATE OF CALIFORNIA - DEPARTMENT OF TRANSPORTATION
Caltrans

THIS PLAN ACCURATE FOR ELECTRICAL WORK ONLY.

LAST REVISION 00-00-00
DATE PLOTTED => 06-MAY-2010
TIME PLOTTED => 18:44

FOR REDUCED PLANS ORIGINAL SCALE IS IN MILLIMETERS 0 20 40 60 80

DGN FILE =>04-0120f1_E-1013.dgn
USERNAME =>llorico

CU 04251

EA 0120F1

DIST	COUNTY	ROUTE	KILOMETER POST TOTAL PROJECT	SHEET No	TOTAL SHEETS
04	SF, Ala	80	12.2/14.3 0.0/4.0	407a 10S15	1204

Syn Yee Chin 03/08/10
REGISTERED ELECTRICAL ENGINEER DATE

05-06-2010
PLANS APPROVAL DATE

REGISTERED PROFESSIONAL ENGINEER
SYN YEE CHIN
No. 18186
Exp. 09/30/2011
ELECTRICAL
STATE OF CALIFORNIA

PB AMERICAS, Inc.
A Parsons Brinckerhoff Company
303 Second St., Suite 700N
San Francisco, CA 94107-1317

The State of California or its officers or agents shall not be responsible for the accuracy or completeness of electronic copies of this plan sheet.

Caltrans now has a web site! To get to the web site, go to http://www.dot.ca.gov

REQUEST FOR INFORMATION NOT ADDRESSED IN THIS CCO REMAIN IN FORCE

MARK	DATE	DESCRIPTIONS	BY	CH'D	CCO#
		REVISIONS			
0	03/08/10	MEP INTEGRATION	SYC	FW	110

CONTRACT CHANGE ORDER NO._____
SHEET _____ OF _____

Conduit/Tray No:	4383	Reference:	E-619, E-660, E-662
Size:	103	Type:	RGS conduit
From:	TOS/COM cell @ Pier E21L	To:	TOS/COM Vault @ Pier E22L
Total Fill (mm2):	323.65	Remarks:	Installed in OTD-1 contract.
Allowable Fill (mm2):	3324.51		
Description of Changes:			

Included Cable No.	Conductor Type	Area (mm2)
1475-7	72 Fiber, single mode fiber optic riser cable inside innerduct	323.65
Pull Rope	Soft-Fiber Polyester	0.00
Spare Innerduct	25.4mm Smoothwall Innerduct	0.00
Spare Innerduct	25.4mm Smoothwall Innerduct	0.00
Spare Innerduct	25.4mm Smoothwall Innerduct	0.00

Conduit/Tray No:	4385	Reference:	E-661
Size:	78	Type:	RGS-PVC coated conduit
From:	TOS/COM cell @ Pier E21L	To:	Splice Cabinet #TOS- 23WS
Total Fill (mm2):	647.30	Remarks:	Installed in OTD-1 contract.
Allowable Fill (mm2):	1935.24		
Description of Changes:			

Included Cable No.	Conductor Type	Area (mm2)
1475-6	72 Fiber, single mode fiber optic riser cable inside innerduct	323.65
1475-7	72 Fiber, single mode fiber optic riser cable inside innerduct	323.65
Pull Rope	Soft-Fiber Polyester	0.00
Spare Innerduct	25.4mm Smoothwall Innerduct	0.00

Conduit/Tray No:	4388	Reference:	E-658
Size:	78	Type:	RGS-PVC coated conduit
From:	TOS/COM cell @ Pier E18L	To:	Splice Cabinet #TOS- 22WS
Total Fill (mm2):	647.30	Remarks:	Installed in OTD-1 contract.
Allowable Fill (mm2):	1935.24		
Description of Changes:			

Included Cable No.	Conductor Type	Area (mm2)
1475-5	72 Fiber, single mode fiber optic riser cable inside innerduct	323.65
1475-6	72 Fiber, single mode fiber optic riser cable inside innerduct	323.65
Pull Rope	Soft-Fiber Polyester	0.00
Spare Innerduct	25.4mm Smoothwall Innerduct	0.00

Conduit/Tray No:	4610	Reference:	E-644
Size:	78	Type:	RGS conduit
From:	Stub-up below 1T41 (on Skyway)	To:	Tel. Terminal Box #TEL-Sub. WB
Total Fill (mm2):	1201.71	Remarks:	Installed in Skyway contract.
Allowable Fill (mm2):	2564.19		
Description of Changes:			

Included Cable No.	Conductor Type	Area (mm2)
1473-23	50 pair #18, shielded pairs, IS/OS shield 600 V, XLPE insul., PVC jacket	1201.71
Pull Rope	Soft-Fiber Polyester	0.00

Conduit/Tray No:	4616	Reference:	E-644
Size:	78	Type:	RGS conduit
From:	Stub-up below 1T41 (on Skyway)	To:	Tel. Terminal Box #TEL-Sub. WB
Total Fill (mm2):	1201.71	Remarks:	Installed in Skyway contract.
Allowable Fill (mm2):	2564.19		
Description of Changes:			

Included Cable No.	Conductor Type	Area (mm2)
1473-15	50 pair #18, shielded pairs, IS/OS shield 600 V, XLPE insul., PVC jacket	1201.71
Pull Rope	Soft-Fiber Polyester	0.00

EXISTING
CONDUIT AND TRAY SCHEDULE

E-1014

THIS PLAN ACCURATE FOR ELECTRICAL WORK ONLY.

CALCULATED/ DESIGNED BY	CHECKED BY	SYC	FW	DATE 01/10	01/10	REVISED BY	DATE REVISED

DESIGN OVERSIGHT
BEHZAD GOLEMOHAMMADI

STATE OF CALIFORNIA - DEPARTMENT OF TRANSPORTATION
Caltrans

LAST REVISION 00-00-00
DATE PLOTTED => 06-MAY-2010
TIME PLOTTED => 18:45

FOR REDUCED PLANS ORIGINAL SCALE IS IN MILLIMETERS 0 20 40 60 80

DGN FILE =>04-0120f1_E-1014.dgn
USERNAME =>llorico

CU 04251

EA 0120F1

DIST	COUNTY	ROUTE	KILOMETER POST TOTAL PROJECT	SHEET No	TOTAL SHEETS
04	SF, Ala	80	12.2/14.3 0.0/4.0	407a 10S16	1204

Syn Yee Chin 03/08/10
REGISTERED ELECTRICAL ENGINEER DATE

05-06-2010
PLANS APPROVAL DATE

REGISTERED PROFESSIONAL ENGINEER
SYN YEE CHIN
No. 18186
Exp. 09/30/2011
ELECTRICAL
STATE OF CALIFORNIA

PB AMERICAS, Inc.
A Parsons Brinckerhoff Company
303 Second St., Suite 700N
San Francisco, CA 94107-1317

The State of California or its officers or agents shall not be responsible for the accuracy or completeness of electronic copies of this plan sheet.

Caltrans now has a web site! To get to the web site, go to http://www.dot.ca.gov

REQUEST FOR INFORMATION NOT ADDRESSED IN THIS CCO REMAIN IN FORCE

MARK	DATE	REVISIONS	BY	CH'D	CCO#
0	03/08/10	MEP INTEGRATION	SYC	FW	110

CONTRACT CHANGE ORDER NO._____
SHEET_____ OF _____

Conduit/Tray No:	4804	Reference:	E-658
Size:	53	Type:	RGS-PVC coated conduit
From:	Splice Cabinet #TOS- 22WS	To:	Controller Cabinet #TOS-22WA
Total Fill (mm2):	30.19	Remarks:	Installed in OTD-1 contract.
Allowable Fill (mm2):	879.42		
Description of Changes:			

Included Cable No.	Conductor Type	Area (mm2)
1475-5A	12 Fiber, single mode fiber optic cable	30.19
Pull Rope	Soft-Fiber Polyester	0.00

Conduit/Tray No:	4837	Reference:	E-661
Size:	78	Type:	RGS-PVC coated conduit
From:	Splice Cabinet #TOS- 23WS	To:	Controller Cabinet #TOS-23WA
Total Fill (mm2):	30.19	Remarks:	Installed in OTD-1 contract.
Allowable Fill (mm2):	2564.19		
Description of Changes:			

Included Cable No.	Conductor Type	Area (mm2)
1475-5B	12 Fiber, single mode fiber optic cable	30.19
Pull Rope	Soft-Fiber Polyester	0.00

Conduit/Tray No:	4852	Reference:	E-638
Size:	78	Type:	RGS conduit
From:	1T40	To:	PB-2B
Total Fill (mm2):	30.19	Remarks:	Installed in Skyway contract.
Allowable Fill (mm2):	2564.19		
Description of Changes:			

Included Cable No.	Conductor Type	Area (mm2)
1475-4A	12 Fiber, single mode fiber optic cable	30.19
Pull Rope	Soft-Fiber Polyester	0.00

Conduit/Tray No:	4859	Reference:	E-638
Size:	78	Type:	RGS-PVC coated conduit
From:	1T40	To:	Tel. Terminal Box #TEL-09W
Total Fill (mm2):	1201.71	Remarks:	Installed in Skyway contract.
Allowable Fill (mm2):	2564.19		
Description of Changes:			

Included Cable No.	Conductor Type	Area (mm2)
1473-11	50 pair #18, shielded pairs, IS/OS shield 600 V, XLPE insul., PVC jacket	1201.71
Pull Rope	Soft-Fiber Polyester	0.00

Conduit/Tray No:	4862	Reference:	E-639
Size:	78	Type:	RGS-PVC coated conduit
From:	1T40	To:	PB-2B
Total Fill (mm2):	30.19	Remarks:	Installed in Skyway contract.
Allowable Fill (mm2):	2564.19		
Description of Changes:			

Included Cable No.	Conductor Type	Area (mm2)
1475-4B	12 Fiber, single mode fiber optic cable	30.19
Pull Rope	Soft-Fiber Polyester	0.00

Conduit/Tray No:	4868	Reference:	E-639
Size:	78	Type:	RGS-PVC coated conduit
From:	1T40	To:	Tel. Terminal Box #TEL-10W
Total Fill (mm2):	1201.71	Remarks:	Installed in Skyway contract.
Allowable Fill (mm2):	2564.19		
Description of Changes:			

Included Cable No.	Conductor Type	Area (mm2)
1473-11	50 pair #18, shielded pairs, IS/OS shield 600 V, XLPE insul., PVC jacket	1201.71
Pull Rope	Soft-Fiber Polyester	0.00

EXISTING
CONDUIT AND TRAY SCHEDULE

E-1015

THIS PLAN ACCURATE FOR ELECTRICAL WORK ONLY.

DESIGN OVERSIGHT BEHZAD GOLEMOHAMMADI
CALCULATED/DESIGNED BY SYC
CHECKED BY FW
DATE 01/10
REVISED BY DATE REVISED
STATE OF CALIFORNIA - DEPARTMENT OF TRANSPORTATION Caltrans

DATE PLOTTED => 06-MAY-2010
TIME PLOTTED => 18:45
LAST REVISION 00-00-00

FOR REDUCED PLANS ORIGINAL SCALE IS IN MILLIMETERS 0 20 40 60 80
DGN FILE =>04-0120f1_E-1015.dgn
USERNAME =>llorico
CU 04251
EA 0120F1

Conduit/Tray No:	4869	Reference:	E-639
Size:	78	Type:	RGS-PVC coated conduit
From:	1T40	To:	Tel. Terminal Box #TEL-10W
Total Fill (mm2):	1201.71	Remarks:	Installed in Skyway contract.
Allowable Fill (mm2):	2564.19		
Description of Changes:			

Included Cable No.	Conductor Type	Area (mm2)
1473-12	50 pair #18, shielded pairs, IS/OS shield 600 V, XLPE insul., PVC jacket	1201.71
Pull Rope	Soft-Fiber Polyester	0.00

Conduit/Tray No:	4872	Reference:	E-640
Size:	78	Type:	RGS-PVC coated conduit
From:	1T40	To:	PB-2B
Total Fill (mm2):	60.38	Remarks:	Installed in Skyway contract.
Allowable Fill (mm2):	1499.81		
Description of Changes:			

Included Cable No.	Conductor Type	Area (mm2)
1475-4C1	12 Fiber, single mode fiber optic cable	30.19
1475-4C2	12 Fiber, single mode fiber optic cable	30.19
Pull Rope	Soft-Fiber Polyester	0.00

Conduit/Tray No:	4878	Reference:	E-640
Size:	78	Type:	RGS-PVC coated conduit
From:	1T40	To:	Tel. Terminal Box #TEL-11W
Total Fill (mm2):	1201.71	Remarks:	Installed in Skyway contract.
Allowable Fill (mm2):	2564.19		
Description of Changes:			

Included Cable No.	Conductor Type	Area (mm2)
1473-12	50 pair #18, shielded pairs, IS/OS shield 600 V, XLPE insul., PVC jacket	1201.71
Pull Rope	Soft-Fiber Polyester	0.00

Conduit/Tray No:	4879	Reference:	E-640
Size:	78	Type:	RGS-PVC coated conduit
From:	1T40	To:	Tel. Terminal Box #TEL-11W
Total Fill (mm2):	1201.71	Remarks:	Installed in Skyway contract.
Allowable Fill (mm2):	2564.19		
Description of Changes:			

Included Cable No.	Conductor Type	Area (mm2)
1473-13	50 pair #18, shielded pairs, IS/OS shield 600 V, XLPE insul., PVC jacket	1201.71
Pull Rope	Soft-Fiber Polyester	0.00

THIS PLAN ACCURATE FOR ELECTRICAL WORK ONLY.

Caltrans Metric

DIST	COUNTY	ROUTE	KILOMETER POST TOTAL PROJECT	SHEET No	TOTAL SHEETS
04	SF, Ala	80	12.2/14.3 0.0/4.0	407a 10S17	1204

Syn Yee Chin 03/08/10
REGISTERED ELECTRICAL ENGINEER DATE

05-06-2010
PLANS APPROVAL DATE

REGISTERED PROFESSIONAL ENGINEER
SYN YEE CHIN
No. 18186
Exp. 09/30/2011
ELECTRICAL
STATE OF CALIFORNIA

PB AMERICAS, Inc.
A Parsons Brinckerhoff Company
303 Second St., Suite 700N
San Francisco, CA 94107-1317

The State of California or its officers or agents shall not be responsible for the accuracy or completeness of electronic copies of this plan sheet.

Caltrans now has a web site! To get to the web site, go to http://www.dot.ca.gov

REQUEST FOR INFORMATION NOT ADDRESSED IN THIS CCO REMAIN IN FORCE

MARK	DATE	DESCRIPTIONS	BY	CH'D	CCO#
0	03/08/10	MEP INTEGRATION	SYC	FW	110
REVISIONS					

CONTRACT CHANGE ORDER NO._____
SHEET_____ OF _____

Conduit/Tray No:	4881	Reference:	E-641
Size:	78	Type:	RGS-PVC coated conduit
From:	1T40	To:	PB-2B
Total Fill (mm2):	30.19	Remarks:	Installed in Skyway contract.
Allowable Fill (mm2):	2564.19		
Description of Changes:			

Included Cable No.	Conductor Type	Area (mm2)
1475-4D	12 Fiber, single mode fiber optic cable	30.19
Pull Rope	Soft-Fiber Polyester	0.00

Conduit/Tray No:	4888	Reference:	E-641
Size:	78	Type:	RGS-PVC coated conduit
From:	1T40	To:	Tel. Terminal Box #TEL-12W
Total Fill (mm2):	1201.71	Remarks:	Installed in Skyway contract.
Allowable Fill (mm2):	2564.19		
Description of Changes:			

Included Cable No.	Conductor Type	Area (mm2)
1473-13	50 pair #18, shielded pairs, IS/OS shield 600 V, XLPE insul., PVC jacket	1201.71
Pull Rope	Soft-Fiber Polyester	0.00

EXISTING
CONDUIT AND TRAY SCHEDULE

E-1016

REVISED BY	DATE REVISED
SYC	01/10
FW	
CALCULATED/ DESIGNED BY	DATE
CHECKED BY	

DESIGN OVERSIGHT
BEHZAD GOLEMOHAMMADI

STATE OF CALIFORNIA - DEPARTMENT OF TRANSPORTATION
Caltrans

DATE PLOTTED => 06-MAY-2010
TIME PLOTTED => 18:45

LAST REVISION 00-00-00

FOR REDUCED PLANS ORIGINAL SCALE IS IN MILLIMETERS 0 20 40 60 80

DGN FILE =>04-0120f1_E-1016.dgn
USERNAME =>llorico

CU 04251

EA 0120F1

DIST	COUNTY	ROUTE	KILOMETER POST TOTAL PROJECT	SHEET No	TOTAL SHEETS
04	SF, Ala	80	12.2/14.3 0.0/4.0	407a 10S18	1204

Syn Yee Chin 03/08/10
REGISTERED ELECTRICAL ENGINEER DATE

05-06-2010
PLANS APPROVAL DATE

REGISTERED PROFESSIONAL ENGINEER
SYN YEE CHIN
No. 18186
Exp. 09/30/2011
ELECTRICAL
STATE OF CALIFORNIA

PB AMERICAS, Inc.
A Parsons Brinckerhoff Company
303 Second St., Suite 700N
San Francisco, CA 94107-1317

The State of California or its officers or agents shall not be responsible for the accuracy or completeness of electronic copies of this plan sheet.

Caltrans now has a web site! To get to the web site, go to http://www.dot.ca.gov

REQUEST FOR INFORMATION NOT ADDRESSED IN THIS CCO REMAIN IN FORCE

MARK	DATE	REVISIONS	BY	CH'D	CCO#
0	03/08/10	MEP INTEGRATION	SYC	FW	110

CONTRACT CHANGE ORDER NO._____
SHEET_____ OF _____

DATE	REVISED BY
01/10	DATE REVISED

CALCULATED/ DESIGNED BY	CHECKED BY
SYC	FW

DESIGN OVERSIGHT
BEHZAD GOLEMOHAMMADI

STATE OF CALIFORNIA - DEPARTMENT OF TRANSPORTATION
Caltrans

Conduit/Tray No: 4889 Reference: E-641
Size: 78 Type: RGS-PVC coated conduit
From: 1T40 To: Tel. Terminal Box #TEL-12W
Total Fill (mm2): 1201.71 Remarks: Installed in Skyway contract.
Allowable Fill (mm2): 2564.19
Description of Changes:

Included Cable No.	Conductor Type	Area (mm2)
1473-14	50 pair #18, shielded pairs, IS/OS shield 600 V, XLPE insul., PVC jacket	1201.71
Pull Rope	Soft-Fiber Polyester	0.00

Conduit/Tray No: 4892 Reference: E-643
Size: 78 Type: RGS-PVC coated conduit
From: 1T41 (on Skyway) To: PB-2B
Total Fill (mm2): 30.19 Remarks: Installed in Skyway contract.
Allowable Fill (mm2): 2564.19
Description of Changes:

Included Cable No.	Conductor Type	Area (mm2)
1475-4E	12 Fiber, single mode fiber optic cable	30.19
Pull Rope	Soft-Fiber Polyester	0.00

Conduit/Tray No: 4898 Reference: E-643
Size: 78 Type: RGS-PVC coated conduit
From: 1T41 (on Skyway) To: Tel. Terminal Box #TEL-13W
Total Fill (mm2): 1201.71 Remarks: Installed in Skyway contract.
Allowable Fill (mm2): 2564.19
Description of Changes:

Included Cable No.	Conductor Type	Area (mm2)
1473-14	50 pair #18, shielded pairs, IS/OS shield 600 V, XLPE insul., PVC jacket	1201.71
Pull Rope	Soft-Fiber Polyester	0.00

Conduit/Tray No: 4899 Reference: E-643
Size: 78 Type: RGS-PVC coated conduit
From: 1T41 To: Tel. Terminal Box #TEL-13W
Total Fill (mm2): 1201.71 Remarks: Installed in Skyway contract.
Allowable Fill (mm2): 2564.19
Description of Changes:

Included Cable No.	Conductor Type	Area (mm2)
1473-23	50 pair #18, shielded pairs, IS/OS shield 600 V, XLPE insul., PVC jacket	1201.71
Pull Rope	Soft-Fiber Polyester	0.00

Conduit/Tray No: 4908 Reference: E-645
Size: 78 Type: RGS-PVC coated conduit
From: 1T41 (on Skyway) To: Tel. Terminal Box #TEL-14W
Total Fill (mm2): 1201.71 Remarks: Installed in Skyway contract.
Allowable Fill (mm2): 2564.19
Description of Changes:

Included Cable No.	Conductor Type	Area (mm2)
1473-15	50 pair #18, shielded pairs, IS/OS shield 600 V, XLPE insul., PVC jacket	1201.71
Pull Rope	Soft-Fiber Polyester	0.00

Conduit/Tray No: 4909 Reference: E-645
Size: 78 Type: RGS-PVC coated conduit
From: 1T41 (on Skyway) To: Tel. Terminal Box #TEL-14W
Total Fill (mm2): 1201.71 Remarks: Installed in Skyway contract.
Allowable Fill (mm2): 2564.19
Description of Changes:

Included Cable No.	Conductor Type	Area (mm2)
1473-16	50 pair #18, shielded pairs, IS/OS shield 600 V, XLPE insul., PVC jacket	1201.71
Pull Rope	Soft-Fiber Polyester	0.00

EXISTING
CONDUIT AND TRAY SCHEDULE

THIS PLAN ACCURATE FOR ELECTRICAL WORK ONLY.

DATE PLOTTED => 06-MAY-2010
TIME PLOTTED => 18:45

LAST REVISION 00-00-00

E-1017

FOR REDUCED PLANS ORIGINAL SCALE IS IN MILLIMETERS 0 20 40 60 80

DGN FILE =>04-0120f1_E-1017.dgn
USERNAME =>llorico

CU 04251 EA 0120F1

DIST	COUNTY	ROUTE	KILOMETER POST TOTAL PROJECT	SHEET No	TOTAL SHEETS
04	SF, Ala	80	12.2/14.3 0.0/4.0	407a 10S19	1204

Caltrans Metric

Syn Yee Chin 03/08/10
REGISTERED ELECTRICAL ENGINEER DATE

05-06-2010
PLANS APPROVAL DATE

REGISTERED PROFESSIONAL ENGINEER — SYN YEE CHIN No. 18186 Exp. 09/30/2011 ELECTRICAL — STATE OF CALIFORNIA

PB AMERICAS, Inc.
A Parsons Brinckerhoff Company
303 Second St., Suite 700N
San Francisco, CA 94107-1317

The State of California or its officers or agents shall not be responsible for the accuracy or completeness of electronic copies of this plan sheet.

Caltrans now has a web site! To get to the web site, go to http://www.dot.ca.gov

REQUEST FOR INFORMATION NOT ADDRESSED IN THIS CCO REMAIN IN FORCE

MARK	DATE	REVISIONS	BY	CH'D	CCO#
0	03/08/10	MEP INTEGRATION	SYC	FW	110

CONTRACT CHANGE ORDER NO. _____
SHEET _____ OF _____

Conduit/Tray No:	4912	Reference:	E-646
Size:	78	Type:	RGS-PVC coated conduit
From:	1T41 (on Skyway)	To:	PB-2B
Total Fill (mm2):	30.19	Remarks:	Installed in Skyway contract.
Allowable Fill (mm2):	2564.19		
Description of Changes:			

Included Cable No.	Conductor Type	Area (mm2)
1475-4F	12 Fiber, single mode fiber optic cable	30.19
Pull Rope	Soft-Fiber Polyester	0.00

Conduit/Tray No:	4918	Reference:	E-646
Size:	78	Type:	RGS-PVC coated conduit
From:	1T41 (on Skyway)	To:	Tel. Terminal Box #TEL-15W
Total Fill (mm2):	1201.71	Remarks:	Installed in Skyway contract.
Allowable Fill (mm2):	2564.19		
Description of Changes:			

Included Cable No.	Conductor Type	Area (mm2)
1473-16	50 pair #18, shielded pairs, IS/OS shield 600 V, XLPE insul., PVC jacket	1201.71
Pull Rope	Soft-Fiber Polyester	0.00

Conduit/Tray No:	4919	Reference:	E-646
Size:	78	Type:	RGS-PVC coated conduit
From:	1T41 (on Skyway)	To:	Tel. Terminal Box #TEL-15W
Total Fill (mm2):	1201.71	Remarks:	Installed in Skyway contract.
Allowable Fill (mm2):	2564.19		
Description of Changes:			

Included Cable No.	Conductor Type	Area (mm2)
1473-17	50 pair #18, shielded pairs, IS/OS shield 600 V, XLPE insul., PVC jacket	1201.71
Pull Rope	Soft-Fiber Polyester	0.00

Conduit/Tray No:	4922	Reference:	E-647
Size:	78	Type:	RGS-PVC coated conduit
From:	1T41 (on Skyway)	To:	PB-2B
Total Fill (mm2):	30.19	Remarks:	Installed in Skyway contract.
Allowable Fill (mm2):	2564.19		
Description of Changes:			

Included Cable No.	Conductor Type	Area (mm2)
1475-4G	12 Fiber, single mode fiber optic cable	30.19
Pull Rope	Soft-Fiber Polyester	0.00

Conduit/Tray No:	4928	Reference:	E-647
Size:	78	Type:	RGS-PVC coated conduit
From:	1T41 (on Skyway)	To:	Tel. Terminal Box #TEL-16W
Total Fill (mm2):	1201.71	Remarks:	Installed in Skyway contract.
Allowable Fill (mm2):	2564.19		
Description of Changes:			

Included Cable No.	Conductor Type	Area (mm2)
1473-17	50 pair #18, shielded pairs, IS/OS shield 600 V, XLPE insul., PVC jacket	1201.71
Pull Rope	Soft-Fiber Polyester	0.00

Conduit/Tray No:	4929	Reference:	E-647
Size:	78	Type:	RGS-PVC coated conduit
From:	1T41 (on Skyway)	To:	Tel. Terminal Box #TEL-16W
Total Fill (mm2):	1201.71	Remarks:	Installed in Skyway contract.
Allowable Fill (mm2):	2564.19		
Description of Changes:			

Included Cable No.	Conductor Type	Area (mm2)
1473-18	50 pair #18, shielded pairs, IS/OS shield 600 V, XLPE insul., PVC jacket	1201.71
Pull Rope	Soft-Fiber Polyester	0.00

EXISTING
CONDUIT AND TRAY SCHEDULE

THIS PLAN ACCURATE FOR ELECTRICAL WORK ONLY.

REVISED BY	DATE REVISED
SYC	01/10
FW	01/10

CALCULATED/DESIGNED BY
CHECKED BY

DESIGN OVERSIGHT
BEHZAD GOLEMOHAMMADI

STATE OF CALIFORNIA - DEPARTMENT OF TRANSPORTATION
Caltrans

DATE PLOTTED => 06-MAY-2010
TIME PLOTTED => 18:45

LAST REVISION 00-00-00

E-1018

FOR REDUCED PLANS ORIGINAL SCALE IS IN MILLIMETERS 0 20 40 60 80

DGN FILE =>04-0120f1_E-1018.dgn
USERNAME =>llorico

CU 04251

EA 0120F1

DIST	COUNTY	ROUTE	KILOMETER POST TOTAL PROJECT	SHEET No	TOTAL SHEETS
04	SF, Ala	80	12.2/14.3 0.0/4.0	407a 10S20	1204

Syn Yee Chin 03/08/10
REGISTERED ELECTRICAL ENGINEER DATE

05-06-2010
PLANS APPROVAL DATE

REGISTERED PROFESSIONAL ENGINEER
SYN YEE CHIN
No. 18186
Exp. 09/30/2011
ELECTRICAL
STATE OF CALIFORNIA

PB AMERICAS, Inc.
A Parsons Brinckerhoff Company
303 Second St., Suite 700N
San Francisco, CA 94107-1317

The State of California or its officers or agents shall not be responsible for the accuracy or completeness of electronic copies of this plan sheet.

Caltrans now has a web site! To get to the web site, go to http://www.dot.ca.gov

REQUEST FOR INFORMATION NOT ADDRESSED IN THIS CCO REMAIN IN FORCE

MARK	DATE	DESCRIPTIONS	BY	CH'D	CCO#
		REVISIONS			
0	03/08/10	MEP INTEGRATION	SYC	FW	110

CONTRACT CHANGE ORDER NO._____
SHEET _____ OF _____

Conduit/Tray No:	4931	Reference:	E-649
Size:	78	Type:	RGS-PVC coated conduit
From:	1T42	To:	PB-2B
Total Fill (mm2):	30.19	Remarks:	Installed in Skyway contract.
Allowable Fill (mm2):	2564.19		
Description of Changes:			

Included Cable No.	Conductor Type	Area (mm2)
1475-4H	12 Fiber, single mode fiber optic cable	30.19
Pull Rope	Soft-Fiber Polyester	0.00

Conduit/Tray No:	4938	Reference:	E-649
Size:	78	Type:	RGS-PVC coated conduit
From:	1T42	To:	Tel. Terminal Box #TEL-17W
Total Fill (mm2):	1201.71	Remarks:	Installed in Skyway contract.
Allowable Fill (mm2):	2564.19		
Description of Changes:			

Included Cable No.	Conductor Type	Area (mm2)
1473-18	50 pair #18, shielded pairs, IS/OS shield 600 V, XLPE insul., PVC jacket	1201.71
Pull Rope	Soft-Fiber Polyester	0.00

Conduit/Tray No:	4939	Reference:	E-649
Size:	78	Type:	RGS-PVC coated conduit
From:	1T42	To:	Tel. Terminal Box #TEL-17W
Total Fill (mm2):	1201.71	Remarks:	Installed in Skyway contract.
Allowable Fill (mm2):	2564.19		
Description of Changes:			

Included Cable No.	Conductor Type	Area (mm2)
1473-19	50 pair #18, shielded pairs, IS/OS shield 600 V, XLPE insul., PVC jacket	1201.71
Pull Rope	Soft-Fiber Polyester	0.00

Conduit/Tray No:	4942	Reference:	E-650
Size:	78	Type:	RGS-PVC coated conduit
From:	1T42	To:	PB-2B
Total Fill (mm2):	60.38	Remarks:	Installed in Skyway contract.
Allowable Fill (mm2):	1499.81		
Description of Changes:			

Included Cable No.	Conductor Type	Area (mm2)
1475-4I1	12 Fiber, single mode fiber optic cable	30.19
1475-4I2	12 Fiber, single mode fiber optic cable	30.19
Pull Rope	Soft-Fiber Polyester	0.00

Conduit/Tray No:	4948	Reference:	E-650
Size:	78	Type:	RGS-PVC coated conduit
From:	1T42	To:	Tel. Terminal Box #TEL-18W
Total Fill (mm2):	1201.71	Remarks:	Installed in Skyway contract.
Allowable Fill (mm2):	2564.19		
Description of Changes:			

Included Cable No.	Conductor Type	Area (mm2)
1473-19	50 pair #18, shielded pairs, IS/OS shield 600 V, XLPE insul., PVC jacket	1201.71
Pull Rope	Soft-Fiber Polyester	0.00

Conduit/Tray No:	4949	Reference:	E-650
Size:	78	Type:	RGS-PVC coated conduit
From:	1T42	To:	Tel. Terminal Box #TEL-18W
Total Fill (mm2):	1201.71	Remarks:	Installed in Skyway contract.
Allowable Fill (mm2):	2564.19		
Description of Changes:			

Included Cable No.	Conductor Type	Area (mm2)
1473-20	50 pair #18, shielded pairs, IS/OS shield 600 V, XLPE insul., PVC jacket	1201.71
Pull Rope	Soft-Fiber Polyester	0.00

EXISTING
CONDUIT AND TRAY SCHEDULE

THIS PLAN ACCURATE FOR ELECTRICAL WORK ONLY.

DATE	BY	REVISED
0/0/0	SYC	DATE REVISED
	FW	

CALCULATED/DESIGNED BY
CHECKED BY

DESIGN OVERSIGHT
BEHZAD GOLEMOHAMMADI

STATE OF CALIFORNIA - DEPARTMENT OF TRANSPORTATION
Caltrans

DATE PLOTTED => 06-MAY-2010
TIME PLOTTED => 18:45

LAST REVISION 00-00-00

E-1019

FOR REDUCED PLANS ORIGINAL SCALE IS IN MILLIMETERS 0 20 40 60 80

DGN FILE =>04-0120f1_E-1019.dgn
USERNAME =>llorico

CU 04251 EA 0120F1

DIST	COUNTY	ROUTE	KILOMETER POST TOTAL PROJECT	SHEET No	TOTAL SHEETS
04	SF, Ala	80	12.2/14.3 0.0/4.0	407a 10S21	1204

Caltrans Metric

Syn Yee Chin 03/08/10
REGISTERED ELECTRICAL ENGINEER DATE

05-06-2010
PLANS APPROVAL DATE

REGISTERED PROFESSIONAL ENGINEER — SYN YEE CHIN No. 18186 Exp. 09/30/2011 ELECTRICAL — STATE OF CALIFORNIA

PB AMERICAS, Inc.
A Parsons Brinckerhoff Company
303 Second St., Suite 700N
San Francisco, CA 94107-1317

The State of California or its officers or agents shall not be responsible for the accuracy or completeness of electronic copies of this plan sheet.

Caltrans now has a web site! To get to the web site, go to http://www.dot.ca.gov

REQUEST FOR INFORMATION NOT ADDRESSED IN THIS CCO REMAIN IN FORCE

MARK	DATE	REVISIONS DESCRIPTIONS	BY	CH'D	CCO#
0	03/08/10	MEP INTEGRATION	SYC	FW	110

CONTRACT CHANGE ORDER NO. _____
SHEET _____ OF _____

Conduit/Tray No:	4958	Reference:	E-651
Size:	78	Type:	RGS-PVC coated conduit
From:	1T42	To:	Tel. Terminal Box #TEL-19W
Total Fill (mm2):	1201.71	Remarks:	Installed in Skyway contract.
Allowable Fill (mm2):	2564.19		
Description of Changes:			

Included Cable No.	Conductor Type	Area (mm2)
1473-20	50 pair #18, shielded pairs, IS/OS shield 600 V, XLPE insul., PVC jacket	1201.71
Pull Rope	Soft-Fiber Polyester	0.00

Conduit/Tray No:	4959	Reference:	E-651
Size:	78	Type:	RGS-PVC coated conduit
From:	1T42	To:	Tel. Terminal Box #TEL-19W
Total Fill (mm2):	1201.71	Remarks:	Installed in Skyway contract.
Allowable Fill (mm2):	2564.19		
Description of Changes:			

Included Cable No.	Conductor Type	Area (mm2)
1473-21	50 pair #18, shielded pairs, IS/OS shield 600 V, XLPE insul., PVC jacket	1201.71
Pull Rope	Soft-Fiber Polyester	0.00

Conduit/Tray No:	4962	Reference:	E-652
Size:	78	Type:	RGS-PVC coated conduit
From:	1T42	To:	PB-2B
Total Fill (mm2):	30.19	Remarks:	Installed in Skyway contract.
Allowable Fill (mm2):	2564.19		
Description of Changes:			

Included Cable No.	Conductor Type	Area (mm2)
1475-4J	12 Fiber, single mode fiber optic cable	30.19
Pull Rope	Soft-Fiber Polyester	0.00

Conduit/Tray No:	4968	Reference:	E-652
Size:	78	Type:	RGS-PVC coated conduit
From:	1T42	To:	Tel. Terminal Box #TEL-20W
Total Fill (mm2):	1201.71	Remarks:	Installed in Skyway contract.
Allowable Fill (mm2):	2564.19		
Description of Changes:			

Included Cable No.	Conductor Type	Area (mm2)
1473-21	50 pair #18, shielded pairs, IS/OS shield 600 V, XLPE insul., PVC jacket	1201.71
Pull Rope	Soft-Fiber Polyester	0.00

Conduit/Tray No:	4969	Reference:	E-652
Size:	78	Type:	RGS-PVC coated conduit
From:	1T42	To:	Tel. Terminal Box #TEL-20W
Total Fill (mm2):	1201.71	Remarks:	Installed in Skyway contract.
Allowable Fill (mm2):	2564.19		
Description of Changes:			

Included Cable No.	Conductor Type	Area (mm2)
1473-22	50 pair #18, shielded pairs, IS/OS shield 600 V, XLPE insul., PVC jacket	1201.71
Pull Rope	Soft-Fiber Polyester	0.00

Conduit/Tray No:	4972	Reference:	E-654
Size:	78	Type:	RGS-PVC coated conduit
From:	1T43 (on Skyway)	To:	PB-2B
Total Fill (mm2):	30.19	Remarks:	Installed in Skyway contract.
Allowable Fill (mm2):	2564.19		
Description of Changes:			

Included Cable No.	Conductor Type	Area (mm2)
1475-4K	12 Fiber, single mode fiber optic cable	30.19
Pull Rope	Soft-Fiber Polyester	0.00

EXISTING
CONDUIT AND TRAY SCHEDULE

E-1020

THIS PLAN ACCURATE FOR ELECTRICAL WORK ONLY.

FOR REDUCED PLANS ORIGINAL SCALE IS IN MILLIMETERS 0 20 40 60 80

DGN FILE =>04-0120f1_E-1020.dgn
USERNAME =>llorico

CU 04251 EA 0120F1

DESIGN OVERSIGHT BEHZAD GOLEMOHAMMADI

STATE OF CALIFORNIA - DEPARTMENT OF TRANSPORTATION Caltrans

DATE REVISED	REVISED BY	DATE	SYC	CALCULATED/ DESIGNED BY	CHECKED BY
01/10	FW	01/10	SYC		

LAST REVISION 00-00-00
DATE PLOTTED => 06-MAY-2010
TIME PLOTTED => 18:45

DIST	COUNTY	ROUTE	KILOMETER POST TOTAL PROJECT	SHEET No	TOTAL SHEETS
04	SF, Ala	80	12.2/14.3 0.0/4.0	407a 10S22	1204

Caltrans Metric

Syn Yee Chin 03/08/10
REGISTERED ELECTRICAL ENGINEER DATE

05-06-2010
PLANS APPROVAL DATE

REGISTERED PROFESSIONAL ENGINEER — SYN YEE CHIN No. 18186 Exp. 09/30/2011 ELECTRICAL — STATE OF CALIFORNIA

PB AMERICAS, Inc.
A Parsons Brinckerhoff Company
303 Second St., Suite 700N
San Francisco, CA 94107-1317

The State of California or its officers or agents shall not be responsible for the accuracy or completeness of electronic copies of this plan sheet.

Caltrans now has a web site! To get to the web site, go to http://www.dot.ca.gov

REQUEST FOR INFORMATION NOT ADDRESSED IN THIS CCO REMAIN IN FORCE

MARK	DATE	REVISIONS DESCRIPTIONS	BY	CH'D	CCO#
0	03/08/10	MEP INTEGRATION	SYC	FW	110

CONTRACT CHANGE ORDER NO. _____
SHEET _____ OF _____

Conduit/Tray No:	4978	Reference:	E-654
Size:	78	Type:	RGS-PVC coated conduit
From:	1T43 (on Skyway)	To:	Tel. Terminal Box #TEL-21W
Total Fill (mm2):	1201.71	Remarks:	Installed in Skyway contract.
Allowable Fill (mm2):	2564.19		
Description of Changes:			

Included Cable No.	Conductor Type	Area (mm2)
1473-22	50 pair #18, shielded pairs, IS/OS shield 600 V, XLPE insul., PVC jacket	1201.71
Pull Rope	Soft-Fiber Polyester	0.00

Conduit/Tray No:	5011	Reference:	E-820
Size:	41	Type:	RGS-PVC coated conduit
From:	PB-2B	To:	Controller Cabinet #TOS-09EA
Total Fill (mm2):	30.19	Remarks:	Installed in Skyway contract.
Allowable Fill (mm2):	702.80		
Description of Changes:			

Included Cable No.	Conductor Type	Area (mm2)
2475-4A	12 Fiber, single mode fiber optic cable	30.19
Pull Rope	Soft-Fiber Polyester	0.00

Conduit/Tray No:	5031	Reference:	E-821
Size:	41	Type:	RGS-PVC coated conduit
From:	PB-2B	To:	Controller Cabinet #TOS-10EA
Total Fill (mm2):	30.19	Remarks:	Installed in Skyway contract.
Allowable Fill (mm2):	702.80		
Description of Changes:			

Included Cable No.	Conductor Type	Area (mm2)
2475-4B	12 Fiber, single mode fiber optic cable	30.19
Pull Rope	Soft-Fiber Polyester	0.00

Conduit/Tray No:	5051	Reference:	E-822
Size:	41	Type:	RGS-PVC coated conduit
From:	PB-2B	To:	Controller Cabinet #TOS-11EA
Total Fill (mm2):	30.19	Remarks:	Installed in Skyway contract.
Allowable Fill (mm2):	702.80		
Description of Changes:			

Included Cable No.	Conductor Type	Area (mm2)
2475-4C	12 Fiber, single mode fiber optic cable	30.19
Pull Rope	Soft-Fiber Polyester	0.00

Conduit/Tray No:	5097	Reference:	E-824
Size:	27	Type:	RGS-PVC coated conduit
From:	Junction Box	To:	Controller Cabinet #TOS-13EB
Total Fill (mm2):	60.38	Remarks:	Installed in Skyway contract.
Allowable Fill (mm2):	177.49		
Description of Changes:			

Included Cable No.	Conductor Type	Area (mm2)
2475-4F1	12 Fiber, single mode fiber optic cable	30.19
2475-4F2	12 Fiber, single mode fiber optic cable	30.19
Pull Rope	Soft-Fiber Polyester	0.00

Conduit/Tray No:	5098	Reference:	E-824
Size:	41	Type:	RGS-PVC coated conduit
From:	PB-2B	To:	Junction Box
Total Fill (mm2):	90.57	Remarks:	Installed in Skyway contract.
Allowable Fill (mm2):	534.55		
Description of Changes:			

Included Cable No.	Conductor Type	Area (mm2)
2475-4E	12 Fiber, single mode fiber optic cable	30.19
2475-4F1	12 Fiber, single mode fiber optic cable	30.19
2475-4F2	12 Fiber, single mode fiber optic cable	30.19
Pull Rope	Soft-Fiber Polyester	0.00

EXISTING
CONDUIT AND TRAY SCHEDULE

E-1021

DESIGN OVERSIGHT	CALCULATED/ DESIGNED BY	DATE	REVISED BY	DATE REVISED
BEHZAD GOLEMOHAMMADI	CHECKED BY	01/10	FW	01/10

STATE OF CALIFORNIA - DEPARTMENT OF TRANSPORTATION
Caltrans

THIS PLAN ACCURATE FOR ELECTRICAL WORK ONLY.

FOR REDUCED PLANS ORIGINAL SCALE IS IN MILLIMETERS 0 20 40 60 80

DGN FILE =>04-0120f1_E-1021.dgn
USERNAME =>llorico

CU 04251

EA 0120F1

DATE PLOTTED => 06-MAY-2010
TIME PLOTTED => 18:45

LAST REVISION 00-00-00

Conduit/Tray No:	5105	Reference:	E-824
Size:	27	Type:	RGS-PVC coated conduit
From:	Junction Box	To:	Controller Cabinet #TOS-13EA
Total Fill (mm2):	30.19	Remarks:	Installed in Skyway contract.
Allowable Fill (mm2):	303.46		
Description of Changes:			

Included Cable No.	Conductor Type	Area (mm2)
2475-4E	12 Fiber, single mode fiber optic cable	30.19
Pull Rope	Soft-Fiber Polyester	0.00

Conduit/Tray No:	5146	Reference:	E-828
Size:	41	Type:	RGS-PVC coated conduit
From:	PB-2B	To:	Controller Cabinet #TOS-15EA
Total Fill (mm2):	30.19	Remarks:	Installed in Skyway contract.
Allowable Fill (mm2):	702.80		
Description of Changes:			

Included Cable No.	Conductor Type	Area (mm2)
2475-4G	12 Fiber, single mode fiber optic cable	30.19
Pull Rope	Soft-Fiber Polyester	0.00

Conduit/Tray No:	5166	Reference:	E-829
Size:	41	Type:	RGS-PVC coated conduit
From:	PB-2B	To:	Controller Cabinet #TOS-16EA
Total Fill (mm2):	30.19	Remarks:	Installed in Skyway contract.
Allowable Fill (mm2):	702.80		
Description of Changes:			

Included Cable No.	Conductor Type	Area (mm2)
2475-4H	12 Fiber, single mode fiber optic cable	30.19
Pull Rope	Soft-Fiber Polyester	0.00

Conduit/Tray No:	5191	Reference:	E-830
Size:	41	Type:	RGS-PVC coated conduit
From:	PB-2B	To:	Controller Cabinet #TOS-17EA
Total Fill (mm2):	30.19	Remarks:	Installed in Skyway contract.
Allowable Fill (mm2):	702.80		
Description of Changes:			

Included Cable No.	Conductor Type	Area (mm2)
2475-4I	12 Fiber, single mode fiber optic cable	30.19
Pull Rope	Soft-Fiber Polyester	0.00

REQUEST FOR INFORMATION NOT ADDRESSED IN THIS CCO REMAIN IN FORCE

MARK	DATE	DESCRIPTIONS	BY	CH'D	CCO#
		REVISIONS			
0	03/08/10	MEP INTEGRATION	SYC	FW	110

CONTRACT CHANGE ORDER NO._____
SHEET _____ OF _____

Caltrans Metric

DIST	COUNTY	ROUTE	KILOMETER POST TOTAL PROJECT	SHEET No	TOTAL SHEETS
04	SF, Ala	80	12.2/14.3 0.0/4.0	407a 10S23	1204

Syn Yee Chin 03/08/10
REGISTERED ELECTRICAL ENGINEER DATE

05-06-2010
PLANS APPROVAL DATE

REGISTERED PROFESSIONAL ENGINEER
SYN YEE CHIN
No. 18186
Exp. 09/30/2011
ELECTRICAL
STATE OF CALIFORNIA

PB AMERICAS, Inc.
A Parsons Brinckerhoff Company
303 Second St., Suite 700N
San Francisco, CA 94107-1317

The State of California or its officers or agents shall not be responsible for the accuracy or completeness of electronic copies of this plan sheet.

Caltrans now has a web site! To get to the web site, go to http://www.dot.ca.gov

Conduit/Tray No:	5211	Reference:	E-831
Size:	41	Type:	RGS-PVC coated conduit
From:	PB-2B	To:	Controller Cabinet #TOS-18EA
Total Fill (mm2):	30.19	Remarks:	Installed in Skyway contract.
Allowable Fill (mm2):	702.80		
Description of Changes:			

Included Cable No.	Conductor Type	Area (mm2)
2475-4J	12 Fiber, single mode fiber optic cable	30.19
Pull Rope	Soft-Fiber Polyester	0.00

Conduit/Tray No:	5251	Reference:	E-833
Size:	41	Type:	RGS-PVC coated conduit
From:	PB-2B	To:	Controller Cabinet #TOS-20EA
Total Fill (mm2):	30.19	Remarks:	Installed in Skyway contract.
Allowable Fill (mm2):	702.80		
Description of Changes:			

Included Cable No.	Conductor Type	Area (mm2)
2475-4K	12 Fiber, single mode fiber optic cable	30.19
Pull Rope	Soft-Fiber Polyester	0.00

Conduit/Tray No:	5276	Reference:	E-834
Size:	41	Type:	RGS-PVC coated conduit
From:	PB-2B	To:	Controller Cabinet #TOS-21EA
Total Fill (mm2):	30.19	Remarks:	Installed in Skyway contract.
Allowable Fill (mm2):	702.80		
Description of Changes:			

Included Cable No.	Conductor Type	Area (mm2)
2475-4L	12 Fiber, single mode fiber optic cable	30.19
Pull Rope	Soft-Fiber Polyester	0.00

EXISTING
CONDUIT AND TRAY SCHEDULE

E-1022

REVISED BY	DATE REVISED
SYC	01/10
FW	01/10

CALCULATED/DESIGNED BY
CHECKED BY

DESIGN OVERSIGHT
BEHZAD GOLEMOHAMMADI

STATE OF CALIFORNIA - DEPARTMENT OF TRANSPORTATION
Caltrans

THIS PLAN ACCURATE FOR ELECTRICAL WORK ONLY.

FOR REDUCED PLANS ORIGINAL SCALE IS IN MILLIMETERS 0 20 40 60 80

DGN FILE =>04-0120f1_E-1022.dgn
USERNAME =>llorico

CU 04251

EA 0120F1

LAST REVISION 00-00-00
DATE PLOTTED => 06-MAY-2010
TIME PLOTTED => 18:45

Conduit/Tray No:	5852
Size:	78
From:	2T40
Total Fill (mm2):	30.19
Allowable Fill (mm2):	2564.19
Description of Changes:	
Reference:	E-820
Type:	RGS-PVC coated conduit
To:	PB-2B
Remarks:	Installed in Skyway contract.

Included Cable No.	Conductor Type	Area (mm2)
2475-4A	12 Fiber, single mode fiber optic cable	30.19
Pull Rope	Soft-Fiber Polyester	0.00

Conduit/Tray No:	5859
Size:	78
From:	2T40
Total Fill (mm2):	1201.71
Allowable Fill (mm2):	2564.19
Description of Changes:	
Reference:	E-820
Type:	RGS-PVC coated conduit
To:	Tel. Terminal Box #TEL-09E
Remarks:	Installed in Skyway contract.

Included Cable No.	Conductor Type	Area (mm2)
2473-11	50 pair #18, shielded pairs, IS/OS shield 600 V, XLPE insul., PVC jacket	1201.71
Pull Rope	Soft-Fiber Polyester	0.00

Conduit/Tray No:	5862
Size:	78
From:	2T40
Total Fill (mm2):	30.19
Allowable Fill (mm2):	2564.19
Description of Changes:	
Reference:	E-821
Type:	RGS-PVC coated conduit
To:	PB-2B
Remarks:	Installed in Skyway contract.

Included Cable No.	Conductor Type	Area (mm2)
2475-4B	12 Fiber, single mode fiber optic cable	30.19
Pull Rope	Soft-Fiber Polyester	0.00

Conduit/Tray No:	5868
Size:	78
From:	2T40
Total Fill (mm2):	1201.71
Allowable Fill (mm2):	2564.19
Description of Changes:	
Reference:	E-821
Type:	RGS-PVC coated conduit
To:	Tel. Terminal Box #TEL-10E
Remarks:	Installed in Skyway contract.

Included Cable No.	Conductor Type	Area (mm2)
2473-11	50 pair #18, shielded pairs, IS/OS shield 600 V, XLPE insul., PVC jacket	1201.71
Pull Rope	Soft-Fiber Polyester	0.00

THIS PLAN ACCURATE FOR ELECTRICAL WORK ONLY.

REQUEST FOR INFORMATION NOT ADDRESSED IN THIS CCO REMAIN IN FORCE

MARK	DATE	DESCRIPTIONS	BY	CH'D	CCO#
		REVISIONS			
0	03/08/10	MEP INTEGRATION	SYC	FW	110

CONTRACT CHANGE ORDER NO._____
SHEET _____ OF _____

Conduit/Tray No:	5869
Size:	78
From:	2T40
Total Fill (mm2):	1201.71
Allowable Fill (mm2):	2564.19
Description of Changes:	
Reference:	E-821
Type:	RGS-PVC coated conduit
To:	Tel. Terminal Box #TEL-10E
Remarks:	Installed in Skyway contract.

Included Cable No.	Conductor Type	Area (mm2)
2473-12	50 pair #18, shielded pairs, IS/OS shield 600 V, XLPE insul., PVC jacket	1201.71
Pull Rope	Soft-Fiber Polyester	0.00

Conduit/Tray No:	5872
Size:	78
From:	2T40
Total Fill (mm2):	30.19
Allowable Fill (mm2):	2564.19
Description of Changes:	
Reference:	E-822
Type:	RGS-PVC coated conduit
To:	PB-2B
Remarks:	Installed in Skyway contract.

Included Cable No.	Conductor Type	Area (mm2)
2475-4C	12 Fiber, single mode fiber optic cable	30.19
Pull Rope	Soft-Fiber Polyester	0.00

DIST	COUNTY	ROUTE	KILOMETER POST TOTAL PROJECT	SHEET No	TOTAL SHEETS
04	SF,Ala	80	12.2/14.3 0.0/4.0	407a 10S24	1204

Syn Yee Chin 03/08/10
REGISTERED ELECTRICAL ENGINEER DATE

05-06-2010
PLANS APPROVAL DATE

REGISTERED PROFESSIONAL ENGINEER
SYN YEE CHIN
No. 18186
Exp. 09/30/2011
ELECTRICAL
STATE OF CALIFORNIA

PB AMERICAS, Inc.
A Parsons Brinckerhoff Company
303 Second St., Suite 700N
San Francisco, CA 94107-1317

The State of California or its officers or agents shall not be responsible for the accuracy or completeness of electronic copies of this plan sheet.

Caltrans now has a web site! To get to the web site, go to http://www.dot.ca.gov

EXISTING
CONDUIT AND TRAY SCHEDULE

E-1023

DESIGN OVERSIGHT BEHZAD GOLEMOHAMMADI
CALCULATED/DESIGNED BY SYC
CHECKED BY FW
DATE 01/10
REVISED BY DATE REVISED
STATE OF CALIFORNIA - DEPARTMENT OF TRANSPORTATION Caltrans

DATE PLOTTED => 06-MAY-2010
TIME PLOTTED => 18:45
LAST REVISION 00-00-00

FOR REDUCED PLANS ORIGINAL SCALE IS IN MILLIMETERS 0 20 40 60 80

DGN FILE =>04-0120f1_E-1023.dgn
USERNAME =>llorico

CU 04251 EA 0120F1

DIST	COUNTY	ROUTE	KILOMETER POST TOTAL PROJECT	SHEET No	TOTAL SHEETS
04	SF, Ala	80	12.2/14.3 0.0/4.0	407a 10S25	1204

Caltrans Metric

Syn Yee Chin 03/08/10
REGISTERED ELECTRICAL ENGINEER DATE

05-06-2010
PLANS APPROVAL DATE

REGISTERED PROFESSIONAL ENGINEER
SYN YEE CHIN
No. 18186
Exp. 09/30/2011
ELECTRICAL
STATE OF CALIFORNIA

PB AMERICAS, Inc.
A Parsons Brinckerhoff Company
303 Second St., Suite 700N
San Francisco, CA 94107-1317

The State of California or its officers or agents shall not be responsible for the accuracy or completeness of electronic copies of this plan sheet.

Caltrans now has a web site! To get to the web site, go to http://www.dot.ca.gov

REQUEST FOR INFORMATION NOT ADDRESSED IN THIS CCO REMAIN IN FORCE

MARK	DATE	DESCRIPTIONS	BY	CH'D	CCO#
		REVISIONS			
0	03/08/10	MEP INTEGRATION	SYC	FW	110

CONTRACT CHANGE ORDER NO._____
SHEET _____ OF _____

Conduit/Tray No:	5878	Reference:	E-822
Size:	78	Type:	RGS-PVC coated conduit
From:	2T40	To:	Tel. Terminal Box #TEL-11E
Total Fill (mm2):	1201.71	Remarks:	Installed in Skyway contract.
Allowable Fill (mm2):	2564.19		
Description of Changes:			

Included Cable No.	Conductor Type	Area (mm2)
2473-12	50 pair #18, shielded pairs, IS/OS shield 600 V, XLPE insul., PVC jacket	1201.71
Pull Rope	Soft-Fiber Polyester	0.00

Conduit/Tray No:	5879	Reference:	E-822
Size:	78	Type:	RGS-PVC coated conduit
From:	2T40	To:	Tel. Terminal Box #TEL-11E
Total Fill (mm2):	1201.71	Remarks:	Installed in Skyway contract.
Allowable Fill (mm2):	2564.19		
Description of Changes:			

Included Cable No.	Conductor Type	Area (mm2)
2473-13	50 pair #18, shielded pairs, IS/OS shield 600 V, XLPE insul., PVC jacket	1201.71
Pull Rope	Soft-Fiber Polyester	0.00

Conduit/Tray No:	5882	Reference:	E-823
Size:	78	Type:	RGS-PVC coated conduit
From:	2T40	To:	Wireway #12E
Total Fill (mm2):	30.19	Remarks:	Installed in Skyway contract.
Allowable Fill (mm2):	2564.19		
Description of Changes:			

Included Cable No.	Conductor Type	Area (mm2)
2475-4D	12 Fiber, single mode fiber optic cable	30.19
Pull Rope	Soft-Fiber Polyester	0.00

Conduit/Tray No:	5888	Reference:	E-823
Size:	78	Type:	RGS-PVC coated conduit
From:	2T40	To:	Tel. Terminal Box #TEL-12E
Total Fill (mm2):	1201.71	Remarks:	Installed in Skyway contract.
Allowable Fill (mm2):	2564.19		
Description of Changes:			

Included Cable No.	Conductor Type	Area (mm2)
2473-13	50 pair #18, shielded pairs, IS/OS shield 600 V, XLPE insul., PVC jacket	1201.71
Pull Rope	Soft-Fiber Polyester	0.00

Conduit/Tray No:	5889	Reference:	E-823
Size:	78	Type:	RGS-PVC coated conduit
From:	2T40	To:	Tel. Terminal Box #TEL-12E
Total Fill (mm2):	1201.71	Remarks:	Installed in Skyway contract.
Allowable Fill (mm2):	2564.19		
Description of Changes:			

Included Cable No.	Conductor Type	Area (mm2)
2473-14	50 pair #18, shielded pairs, IS/OS shield 600 V, XLPE insul., PVC jacket	1201.71
Pull Rope	Soft-Fiber Polyester	0.00

Conduit/Tray No:	5891	Reference:	E-824
Size:	78	Type:	RGS-PVC coated conduit
From:	2T41 (on Skyway)	To:	PB-2B
Total Fill (mm2):	90.57	Remarks:	Installed in Skyway contract.
Allowable Fill (mm2):	1935.24		
Description of Changes:			

Included Cable No.	Conductor Type	Area (mm2)
2475-4E	12 Fiber, single mode fiber optic cable	30.19
2475-4F1	12 Fiber, single mode fiber optic cable	30.19
2475-4F2	12 Fiber, single mode fiber optic cable	30.19
Pull Rope	Soft-Fiber Polyester	0.00

EXISTING
CONDUIT AND TRAY SCHEDULE

E-1024

THIS PLAN ACCURATE FOR ELECTRICAL WORK ONLY.

DESIGN OVERSIGHT	CALCULATED/ DESIGNED BY	CHECKED BY	DATE	REVISED BY	DATE REVISED
BEHZAD GOLEMOHAMMADI	SYC	FW	01/10		

STATE OF CALIFORNIA - DEPARTMENT OF TRANSPORTATION
Caltrans

LAST REVISION 00-00-00
DATE PLOTTED => 06-MAY-2010
TIME PLOTTED => 18:46

FOR REDUCED PLANS ORIGINAL SCALE IS IN MILLIMETERS 0 20 40 60 80

DGN FILE =>04-0120f1_E-1024.dgn
USERNAME =>llorico

CU 04251

EA 0120F1

DIST	COUNTY	ROUTE	KILOMETER POST TOTAL PROJECT	SHEET No	TOTAL SHEETS
04	SF, Ala	80	12.2/14.3 0.0/4.0	407a 10S26	1204

REQUEST FOR INFORMATION NOT ADDRESSED IN THIS CCO REMAIN IN FORCE

MARK	DATE	DESCRIPTIONS	BY	CH'D	CCO#
		REVISIONS			
0	03/08/10	MEP INTEGRATION	SYC	FW	110

CONTRACT CHANGE ORDER NO._____
SHEET _____ OF _____

Caltrans Metric

Syn Yee Chin 03/08/10
REGISTERED ELECTRICAL ENGINEER DATE

05-06-2010
PLANS APPROVAL DATE

REGISTERED PROFESSIONAL ENGINEER
SYN YEE CHIN
No. 18186
Exp. 09/30/2011
ELECTRICAL
STATE OF CALIFORNIA

PB AMERICAS, Inc.
A Parsons Brinckerhoff Company
303 Second St., Suite 700N
San Francisco, CA 94107-1317

The State of California or its officers or agents shall not be responsible for the accuracy or completeness of electronic copies of this plan sheet.

Caltrans now has a web site! To get to the web site, go to http://www.dot.ca.gov

Conduit/Tray No:	5898	Reference:	E-824
Size:	78	Type:	RGS-PVC coated conduit
From:	2T41 (on Skyway)	To:	Tel. Terminal Box #TEL-13E
Total Fill (mm2):	1201.71	Remarks:	Installed in Skyway contract.
Allowable Fill (mm2):	2564.19		
Description of Changes:			

Included Cable No.	Conductor Type	Area (mm2)
2473-14	50 pair #18, shielded pairs, IS/OS shield 600 V, XLPE insul., PVC jacket	1201.71
Pull Rope	Soft-Fiber Polyester	0.00

Conduit/Tray No:	5912	Reference:	E-828
Size:	78	Type:	RGS-PVC coated conduit
From:	2T41 (on Skyway)	To:	PB-2B
Total Fill (mm2):	30.19	Remarks:	Installed in Skyway contract.
Allowable Fill (mm2):	2564.19		
Description of Changes:			

Included Cable No.	Conductor Type	Area (mm2)
2475-4G	12 Fiber, single mode fiber optic cable	30.19
Pull Rope	Soft-Fiber Polyester	0.00

Conduit/Tray No:	5922	Reference:	E-829
Size:	78	Type:	RGS-PVC coated conduit
From:	2T41 (on Skyway)	To:	PB-2B
Total Fill (mm2):	30.19	Remarks:	Installed in Skyway contract.
Allowable Fill (mm2):	2564.19		
Description of Changes:			

Included Cable No.	Conductor Type	Area (mm2)
2475-4H	12 Fiber, single mode fiber optic cable	30.19
Pull Rope	Soft-Fiber Polyester	0.00

Conduit/Tray No:	5932	Reference:	E-830
Size:	78	Type:	RGS-PVC coated conduit
From:	2T42	To:	PB-2B
Total Fill (mm2):	30.19	Remarks:	Installed in Skyway contract.
Allowable Fill (mm2):	2564.19		
Description of Changes:			

Included Cable No.	Conductor Type	Area (mm2)
2475-4I	12 Fiber, single mode fiber optic cable	30.19
Pull Rope	Soft-Fiber Polyester	0.00

Conduit/Tray No:	5942	Reference:	E-831
Size:	78	Type:	RGS-PVC coated conduit
From:	2T42	To:	PB-2B
Total Fill (mm2):	30.19	Remarks:	Installed in Skyway contract.
Allowable Fill (mm2):	2564.19		
Description of Changes:			

Included Cable No.	Conductor Type	Area (mm2)
2475-4J	12 Fiber, single mode fiber optic cable	30.19
Pull Rope	Soft-Fiber Polyester	0.00

Conduit/Tray No:	5962	Reference:	E-833
Size:	78	Type:	RGS-PVC coated conduit
From:	2T42	To:	PB-2B
Total Fill (mm2):	30.19	Remarks:	Installed in Skyway contract.
Allowable Fill (mm2):	2564.19		
Description of Changes:			

Included Cable No.	Conductor Type	Area (mm2)
2475-4K	12 Fiber, single mode fiber optic cable	30.19
Pull Rope	Soft-Fiber Polyester	0.00

Conduit/Tray No:	5972	Reference:	E-834
Size:	78	Type:	RGS-PVC coated conduit
From:	2T43 (on Skyway)	To:	PB-2B
Total Fill (mm2):	30.19	Remarks:	Installed in Skyway contract.
Allowable Fill (mm2):	2564.19		
Description of Changes:			

Included Cable No.	Conductor Type	Area (mm2)
2475-4L	12 Fiber, single mode fiber optic cable	30.19
Pull Rope	Soft-Fiber Polyester	0.00

EXISTING
CONDUIT AND TRAY SCHEDULE

E-1025

DATE	REVISED BY
01/10	DATE REVISED

CALCULATED/ DESIGNED BY	CHECKED BY
SYC	FW

DESIGN OVERSIGHT
BEHZAD GOLEMOHAMMADI

STATE OF CALIFORNIA - DEPARTMENT OF TRANSPORTATION
Caltrans

THIS PLAN ACCURATE FOR ELECTRICAL WORK ONLY.

LAST REVISION 00-00-00
DATE PLOTTED => 06-MAY-2010
TIME PLOTTED => 18:46

FOR REDUCED PLANS ORIGINAL SCALE IS IN MILLIMETERS 0 20 40 60 80

DGN FILE =>04-0120f1_E-1025.dgn
USERNAME =>llorico

CU 04251

EA 0120F1

DIST	COUNTY	ROUTE	KILOMETER POST TOTAL PROJECT	SHEET No	TOTAL SHEETS
04	SF, Ala	80	12.2/14.3 0.0/4.0	407a 10S27	1204

Caltrans Metric

Syn Yee Chin 03/08/10
REGISTERED ELECTRICAL ENGINEER DATE

05-06-2010
PLANS APPROVAL DATE

REGISTERED PROFESSIONAL ENGINEER — SYN YEE CHIN No. 18186 Exp. 09/30/2011 ELECTRICAL — STATE OF CALIFORNIA

PB AMERICAS, Inc.
A Parsons Brinckerhoff Company
303 Second St., Suite 700N
San Francisco, CA 94107-1317

The State of California or its officers or agents shall not be responsible for the accuracy or completeness of electronic copies of this plan sheet.

Caltrans now has a web site! To get to the web site, go to http://www.dot.ca.gov

REQUEST FOR INFORMATION NOT ADDRESSED IN THIS CCO REMAIN IN FORCE

MARK	DATE	REVISIONS DESCRIPTIONS	BY	CH'D	CCO#
0	03/08/10	MEP INTEGRATION	SYC	FW	110

CONTRACT CHANGE ORDER NO._____
SHEET _____ OF _____

Conduit/Tray No: 6302 Reference: E-617, E-656
Size: 103 Type: RGS conduit
From: Hinge EW Girder Interface To: 12.47 kV Vault
Total Fill (mm2): 3115.90 Remarks: Installed in OTD-1 contract. System Ground cable is existing.
Allowable Fill (mm2): 3324.51
Description of Changes:

Included Cable No.	Conductor Type	Area (mm2)
1392	3-1/C #4/0, 15 KV, EPR insulation	2780.99
Pull Rope	Soft-Fiber Polyester	0.00
System Ground	500 kcmil, bare copper wire, stranded	334.91

Conduit/Tray No: 6530 Reference: E-642
Size: 103 Type: Liquidtight flex metal conduit
From: 1T10 To: 6531
Total Fill (mm2): 3115.90 Remarks: Installed in Skyway contract. System Ground cable is existing.
Allowable Fill (mm2): 3275.44
Description of Changes:

Included Cable No.	Conductor Type	Area (mm2)
1391	3-1/C #4/0, 15 KV, EPR insulation	2780.99
System Ground	500 kcmil, bare copper wire, stranded	334.91
Pull Rope	Soft-Fiber Polyester	0.00

Conduit/Tray No: 6531 Reference: E-642
Size: 103 Type: RGS conduit
From: 6530 To: 6532
Total Fill (mm2): 3115.90 Remarks: Installed in Skyway contract. System Ground cable is existing.
Allowable Fill (mm2): 3324.51
Description of Changes:

Included Cable No.	Conductor Type	Area (mm2)
1391	3-1/C #4/0, 15 KV, EPR insulation	2780.99
System Ground	500 kcmil, bare copper wire, stranded	334.91
Pull Rope	Soft-Fiber Polyester	0.00

Conduit/Tray No: 6532 Reference: E-642
Size: 103 Type: Liquidtight flex metal conduit
From: 6531 To: 1T11
Total Fill (mm2): 3115.90 Remarks: Installed in Skyway contract. System Ground cable is existing.
Allowable Fill (mm2): 3275.44
Description of Changes:

Included Cable No.	Conductor Type	Area (mm2)
1391	3-1/C #4/0, 15 KV, EPR insulation	2780.99
System Ground	500 kcmil, bare copper wire, stranded	334.91
Pull Rope	Soft-Fiber Polyester	0.00

Conduit/Tray No: 6554 Reference: E-642
Size: 103 Type: Liquidtight flex metal conduit
From: 1T40 To: 6559
Total Fill (mm2): 647.30 Remarks: Installed in Skyway contract.
Allowable Fill (mm2): 3275.44
Description of Changes:

Included Cable No.	Conductor Type	Area (mm2)
1475-4	72 Fiber, single mode fiber optic riser cable inside innerduct	323.65
1477-3	72 Fiber, single mode fiber optic riser cable inside innerduct	323.65
Pull Rope	Soft-Fiber Polyester	0.00
Spare Innerduct	25.4mm Smoothwall Innerduct	0.00
Spare Innerduct	25.4mm Smoothwall Innerduct	0.00

Conduit/Tray No: 6559 Reference: E-642
Size: 103 Type: RGS conduit
From: 6554 To: 6564
Total Fill (mm2): 647.30 Remarks: Installed in Skyway contract.
Allowable Fill (mm2): 3324.51
Description of Changes:

Included Cable No.	Conductor Type	Area (mm2)
1475-4	72 Fiber, single mode fiber optic riser cable inside innerduct	323.65
1477-3	72 Fiber, single mode fiber optic riser cable inside innerduct	323.65
Pull Rope	Soft-Fiber Polyester	0.00
Spare Innerduct	25.4mm Smoothwall Innerduct	0.00
Spare Innerduct	25.4mm Smoothwall Innerduct	0.00

EXISTING
CONDUIT AND TRAY SCHEDULE

E-1026

DATE	REVISED BY
01/10	DATE REVISED

CALCULATED/DESIGNED BY: SYC
CHECKED BY: FW

DESIGN OVERSIGHT: BEHZAD GOLEMOHAMMADI

STATE OF CALIFORNIA - DEPARTMENT OF TRANSPORTATION
Caltrans

THIS PLAN ACCURATE FOR ELECTRICAL WORK ONLY.

FOR REDUCED PLANS ORIGINAL SCALE IS IN MILLIMETERS 0 20 40 60 80

DGN FILE =>04-0120f1_E-1026.dgn
USERNAME =>llorico

CU 04251 EA 0120F1

LAST REVISION 00-00-00
DATE PLOTTED => 06-MAY-2010
TIME PLOTTED => 18:46

DIST	COUNTY	ROUTE	KILOMETER POST TOTAL PROJECT	SHEET No	TOTAL SHEETS
04	SF, Ala	80	12.2/14.3 0.0/4.0	407a 10S28	1204

Syn Yee Chin 03/08/10
REGISTERED ELECTRICAL ENGINEER DATE

05-06-2010
PLANS APPROVAL DATE

REGISTERED PROFESSIONAL ENGINEER
SYN YEE CHIN
No. 18186
Exp. 09/30/2011
ELECTRICAL
STATE OF CALIFORNIA

PB AMERICAS, Inc.
A Parsons Brinckerhoff Company
303 Second St., Suite 700N
San Francisco, CA 94107-1317

The State of California or its officers or agents shall not be responsible for the accuracy or completeness of electronic copies of this plan sheet.

Caltrans now has a web site! To get to the web site, go to http://www.dot.ca.gov

REQUEST FOR INFORMATION NOT ADDRESSED IN THIS CCO REMAIN IN FORCE

MARK	DATE	DESCRIPTIONS	BY	CH'D	CCO#
		REVISIONS			
0	03/08/10	MEP INTEGRATION	SYC	FW	110

CONTRACT CHANGE ORDER NO._____
SHEET _____ OF _____

Conduit/Tray No:	6564	Reference:	E-642
Size:	103	Type:	Liquidtight flex metal conduit
From:	6559	To:	1T41 (on Skyway)
Total Fill (mm2):	647.30	Remarks:	Installed in Skyway contract.
Allowable Fill (mm2):	3275.44		
Description of Changes:			

Included Cable No.	Conductor Type	Area (mm2)
1475-4	72 Fiber, single mode fiber optic riser cable inside innerduct	323.65
1477-3	72 Fiber, single mode fiber optic riser cable inside innerduct	323.65
Pull Rope	Soft-Fiber Polyester	0.00
Spare Innerduct	25.4mm Smoothwall Innerduct	0.00
Spare Innerduct	25.4mm Smoothwall Innerduct	0.00

Conduit/Tray No:	6586	Reference:	E-648
Size:	103	Type:	Liquidtight flex metal conduit
From:	1T11	To:	6587
Total Fill (mm2):	3115.90	Remarks:	Installed in Skyway contract. System Ground cable is existing.
Allowable Fill (mm2):	3275.44		
Description of Changes:			

Included Cable No.	Conductor Type	Area (mm2)
1392	3-1/C #4/0, 15 KV, EPR insulation	2780.99
System Ground	500 kcmil, bare copper wire, stranded	334.91
Pull Rope	Soft-Fiber Polyester	0.00

Conduit/Tray No:	6587	Reference:	E-648
Size:	103	Type:	RGS conduit
From:	6586	To:	6588
Total Fill (mm2):	3115.90	Remarks:	Installed in Skyway contract. System Ground cable is existing.
Allowable Fill (mm2):	3324.51		
Description of Changes:			

Included Cable No.	Conductor Type	Area (mm2)
1392	3-1/C #4/0, 15 KV, EPR insulation	2780.99
System Ground	500 kcmil, bare copper wire, stranded	334.91
Pull Rope	Soft-Fiber Polyester	0.00

Conduit/Tray No:	6588	Reference:	E-648
Size:	103	Type:	Liquidtight flex metal conduit
From:	6587	To:	1T12
Total Fill (mm2):	3115.90	Remarks:	Installed in Skyway contract. System Ground cable is existing.
Allowable Fill (mm2):	3275.44		
Description of Changes:			

Included Cable No.	Conductor Type	Area (mm2)
1392	3-1/C #4/0, 15 KV, EPR insulation	2780.99
System Ground	500 kcmil, bare copper wire, stranded	334.91
Pull Rope	Soft-Fiber Polyester	0.00

Conduit/Tray No:	6610	Reference:	E-648
Size:	103	Type:	Liquidtight flex metal conduit
From:	1T41 (on Skyway)	To:	6615
Total Fill (mm2):	647.30	Remarks:	Installed in Skyway contract.
Allowable Fill (mm2):	3275.44		
Description of Changes:			

Included Cable No.	Conductor Type	Area (mm2)
1475-4	72 Fiber, single mode fiber optic riser cable inside innerduct	323.65
1477-3	72 Fiber, single mode fiber optic riser cable inside innerduct	323.65
Pull Rope	Soft-Fiber Polyester	0.00
Spare Innerduct	25.4mm Smoothwall Innerduct	0.00
Spare Innerduct	25.4mm Smoothwall Innerduct	0.00

EXISTING
CONDUIT AND TRAY SCHEDULE

E-1027

THIS PLAN ACCURATE FOR ELECTRICAL WORK ONLY.

FOR REDUCED PLANS ORIGINAL SCALE IS IN MILLIMETERS 0 20 40 60 80

DGN FILE =>04-0120f1_E-1027.dgn
USERNAME =>llorico

CU 04251 EA 0120F1

DATE PLOTTED => 06-MAY-2010
TIME PLOTTED => 18:46

LAST REVISION 00-00-00

STATE OF CALIFORNIA - DEPARTMENT OF TRANSPORTATION
Caltrans

DESIGN OVERSIGHT BEHZAD GOLEMOHAMMADI

CALCULATED/ DESIGNED BY | CHECKED BY
SYC | FW
DATE 01/10 | 01/10
REVISED BY | DATE REVISED

Conduit/Tray No:	6615	Reference:	E-648
Size:	103	Type:	RGS conduit
From:	6610	To:	6620
Total Fill (mm2):	647.30	Remarks:	Installed in Skyway contract.
Allowable Fill (mm2):	3324.51		
Description of Changes:			

Included Cable No.	Conductor Type	Area (mm2)
1475-4	72 Fiber, single mode fiber optic riser cable inside innerduct	323.65
1477-3	72 Fiber, single mode fiber optic riser cable inside innerduct	323.65
Pull Rope	Soft-Fiber Polyester	0.00
Spare Innerduct	25.4mm Smoothwall Innerduct	0.00
Spare Innerduct	25.4mm Smoothwall Innerduct	0.00

Conduit/Tray No:	6620	Reference:	E-648
Size:	103	Type:	Liquidtight flex metal conduit
From:	6615	To:	1T42
Total Fill (mm2):	647.30	Remarks:	Installed in Skyway contract.
Allowable Fill (mm2):	3275.44		
Description of Changes:			

Included Cable No.	Conductor Type	Area (mm2)
1475-4	72 Fiber, single mode fiber optic riser cable inside innerduct	323.65
1477-3	72 Fiber, single mode fiber optic riser cable inside innerduct	323.65
Pull Rope	Soft-Fiber Polyester	0.00
Spare Innerduct	25.4mm Smoothwall Innerduct	0.00
Spare Innerduct	25.4mm Smoothwall Innerduct	0.00

Conduit/Tray No:	6642	Reference:	E-653
Size:	103	Type:	Liquidtight flex metal conduit
From:	1T12	To:	6643
Total Fill (mm2):	3115.90	Remarks:	Installed in Skyway contract. System ground cable is existing.
Allowable Fill (mm2):	3275.44		
Description of Changes:			

Included Cable No.	Conductor Type	Area (mm2)
1392	3-1/C #4/0, 15 KV, EPR insulation	2780.99
System Ground	500 kcmil, bare copper wire, stranded	334.91
Pull Rope	Soft-Fiber Polyester	0.00

Caltrans Metric

DIST	COUNTY	ROUTE	KILOMETER POST TOTAL PROJECT	SHEET No	TOTAL SHEETS
04	SF,Ala	80	12.2/14.3 0.0/4.0	407a 10S29	1204

Syn Yee Chin 03/08/10
REGISTERED ELECTRICAL ENGINEER DATE

05-06-2010
PLANS APPROVAL DATE

REGISTERED PROFESSIONAL ENGINEER
SYN YEE CHIN
No. 18186
Exp. 09/30/2011
ELECTRICAL
STATE OF CALIFORNIA

PB AMERICAS, Inc.
A Parsons Brinckerhoff Company
303 Second St., Suite 700N
San Francisco, CA 94107-1317

The State of California or its officers or agents shall not be responsible for the accuracy or completeness of electronic copies of this plan sheet.

Caltrans now has a web site! To get to the web site, go to http://www.dot.ca.gov

REQUEST FOR INFORMATION NOT ADDRESSED IN THIS CCO REMAIN IN FORCE

MARK	DATE	DESCRIPTIONS	BY	CH'D	CCO#
		REVISIONS			
0	03/08/10	MEP INTEGRATION	SYC	FW	110

CONTRACT CHANGE ORDER NO._____
SHEET _____ OF _____

Conduit/Tray No:	6643	Reference:	E-653
Size:	103	Type:	RGS conduit
From:	6642	To:	6644
Total Fill (mm2):	3115.90	Remarks:	Installed in Skyway contract. System ground cable is existing.
Allowable Fill (mm2):	3324.51		
Description of Changes:			

Included Cable No.	Conductor Type	Area (mm2)
1392	3-1/C #4/0, 15 KV, EPR insulation	2780.99
System Ground	500 kcmil, bare copper wire, stranded	334.91
Pull Rope	Soft-Fiber Polyester	0.00

Conduit/Tray No:	6644	Reference:	E-653
Size:	103	Type:	Liquidtight flex metal conduit
From:	6643	To:	1T13
Total Fill (mm2):	3115.90	Remarks:	Installed in Skyway contract. System ground cable is existing.
Allowable Fill (mm2):	3275.44		
Description of Changes:			

Included Cable No.	Conductor Type	Area (mm2)
1392	3-1/C #4/0, 15 KV, EPR insulation	2780.99
System Ground	500 kcmil, bare copper wire, stranded	334.91
Pull Rope	Soft-Fiber Polyester	0.00

EXISTING
CONDUIT AND TRAY SCHEDULE

E-1028

REVISED BY	DATE REVISED
DATE 01/10	01/10
SYC	FW
CALCULATED/ DESIGNED BY	CHECKED BY

DESIGN OVERSIGHT BEHZAD GOLEMOHAMMADI

STATE OF CALIFORNIA - DEPARTMENT OF TRANSPORTATION
Caltrans

THIS PLAN ACCURATE FOR ELECTRICAL WORK ONLY.

FOR REDUCED PLANS ORIGINAL SCALE IS IN MILLIMETERS 0 20 40 60 80

DGN FILE =>04-0120f1_E-1028.dgn
USERNAME =>llorico

CU 04251

EA 0120F1

LAST REVISION 00-00-00
DATE PLOTTED => 06-MAY-2010
TIME PLOTTED => 18:46

DIST	COUNTY	ROUTE	KILOMETER POST TOTAL PROJECT	SHEET No	TOTAL SHEETS
04	SF, Ala	80	12.2/14.3 0.0/4.0	407a 10S30	1204

Syn Yee Chin 03/08/10
REGISTERED ELECTRICAL ENGINEER DATE

05-06-2010
PLANS APPROVAL DATE

REGISTERED PROFESSIONAL ENGINEER
SYN YEE CHIN
No. 18186
Exp. 09/30/2011
ELECTRICAL
STATE OF CALIFORNIA

PB AMERICAS, Inc.
A Parsons Brinckerhoff Company
303 Second St., Suite 700N
San Francisco, CA 94107-1317

The State of California or its officers or agents shall not be responsible for the accuracy or completeness of electronic copies of this plan sheet.

Caltrans now has a web site! To get to the web site, go to http://www.dot.ca.gov

REQUEST FOR INFORMATION NOT ADDRESSED IN THIS CCO REMAIN IN FORCE

MARK	DATE	DESCRIPTIONS	BY	CH'D	CCO#
		REVISIONS			
0	03/08/10	MEP INTEGRATION	SYC	FW	110

CONTRACT CHANGE ORDER NO._____
SHEET _____ OF _____

Conduit/Tray No:	6668	Reference:	E-653
Size:	103	Type:	Liquidtight flex metal conduit
From:	1T42	To:	6673
Total Fill (mm2):	647.30	Remarks:	Installed in Skyway contract.
Allowable Fill (mm2):	3275.44		
Description of Changes:			

Included Cable No.	Conductor Type	Area (mm2)
1475-4	72 Fiber, single mode fiber optic riser cable inside innerduct	323.65
1477-3	72 Fiber, single mode fiber optic riser cable inside innerduct	323.65
Pull Rope	Soft-Fiber Polyester	0.00
Spare Innerduct	25.4mm Smoothwall Innerduct	0.00
Spare Innerduct	25.4mm Smoothwall Innerduct	0.00

Conduit/Tray No:	6673	Reference:	E-653
Size:	103	Type:	RGS conduit
From:	6668	To:	6678
Total Fill (mm2):	647.30	Remarks:	Installed in Skyway contract.
Allowable Fill (mm2):	3324.51		
Description of Changes:			

Included Cable No.	Conductor Type	Area (mm2)
1475-4	72 Fiber, single mode fiber optic riser cable inside innerduct	323.65
1477-3	72 Fiber, single mode fiber optic riser cable inside innerduct	323.65
Pull Rope	Soft-Fiber Polyester	0.00
Spare Innerduct	25.4mm Smoothwall Innerduct	0.00
Spare Innerduct	25.4mm Smoothwall Innerduct	0.00

Conduit/Tray No:	6678	Reference:	E-653
Size:	103	Type:	Liquidtight flex metal conduit
From:	6673	To:	1T43 (on Skyway)
Total Fill (mm2):	647.30	Remarks:	Installed in Skyway contract.
Allowable Fill (mm2):	3275.44		
Description of Changes:			

Included Cable No.	Conductor Type	Area (mm2)
1475-4	72 Fiber, single mode fiber optic riser cable inside innerduct	323.65
1477-3	72 Fiber, single mode fiber optic riser cable inside innerduct	323.65
Pull Rope	Soft-Fiber Polyester	0.00
Spare Innerduct	25.4mm Smoothwall Innerduct	0.00
Spare Innerduct	25.4mm Smoothwall Innerduct	0.00

Conduit/Tray No:	6700	Reference:	E-655
Size:	103	Type:	Liquidtight flex metal conduit
From:	6937	To:	6701
Total Fill (mm2):	3115.90	Remarks:	Installed in Skyway contract. System ground cable is existing.
Allowable Fill (mm2):	3275.44		
Description of Changes:			

Included Cable No.	Conductor Type	Area (mm2)
1392	3-1/C #4/0, 15 KV, EPR insulation	2780.99
Pull Rope	Soft-Fiber Polyester	0.00
System Ground	500 kcmil, bare copper wire, stranded	334.91

Conduit/Tray No:	6701	Reference:	E-655
Size:	103	Type:	RGS conduit
From:	6700	To:	Contract Interface @ Hinge EW
Total Fill (mm2):	3115.90	Remarks:	Installed in Skyway contract. System ground cable is existing.
Allowable Fill (mm2):	3324.51		
Description of Changes:			

Included Cable No.	Conductor Type	Area (mm2)
1392	3-1/C #4/0, 15 KV, EPR insulation	2780.99
Pull Rope	Soft-Fiber Polyester	0.00
System Ground	500 kcmil, bare copper wire, stranded	334.91

EXISTING
CONDUIT AND TRAY SCHEDULE

E-1029

DATE	REVISED BY	DATE REVISED
01/10	FW	01/10

CALCULATED/DESIGNED BY
CHECKED BY
SYC

DESIGN OVERSIGHT
BEHZAD GOLEMOHAMMADI

STATE OF CALIFORNIA - DEPARTMENT OF TRANSPORTATION
Caltrans

THIS PLAN ACCURATE FOR ELECTRICAL WORK ONLY.

FOR REDUCED PLANS ORIGINAL SCALE IS IN MILLIMETERS 0 20 40 60 80

DGN FILE =>04-0120f1_E-1029.dgn
USERNAME =>llorico

CU 04251

EA 0120F1

DATE PLOTTED => 06-MAY-2010
TIME PLOTTED => 18:46

LAST REVISION 00-00-00

DIST	COUNTY	ROUTE	KILOMETER POST TOTAL PROJECT	SHEET No	TOTAL SHEETS
04	SF, Ala	80	12.2/14.3 0.0/4.0	407a 10S31	1204

Syn Yee Chin 03/08/10
REGISTERED ELECTRICAL ENGINEER DATE

05-06-2010
PLANS APPROVAL DATE

REGISTERED PROFESSIONAL ENGINEER
SYN YEE CHIN
No. 18186
Exp. 09/30/2011
ELECTRICAL
STATE OF CALIFORNIA

PB AMERICAS, Inc.
A Parsons Brinckerhoff Company
303 Second St., Suite 700N
San Francisco, CA 94107-1317

The State of California or its officers or agents shall not be responsible for the accuracy or completeness of electronic copies of this plan sheet.

Caltrans now has a web site! To get to the web site, go to http://www.dot.ca.gov

REQUEST FOR INFORMATION NOT ADDRESSED IN THIS CCO REMAIN IN FORCE

MARK	DATE	REVISIONS DESCRIPTIONS	BY	CH'D	CCO#
0	03/08/10	MEP INTEGRATION	SYC	FW	110

CONTRACT CHANGE ORDER NO._____
SHEET _____ OF _____

Conduit/Tray No:	6719	Reference:	E-655
Size:	103	Type:	RGS conduit
From:	6972	To:	6724
Total Fill (mm2):	323.65	Remarks:	Installed in OTD-1 contract.
Allowable Fill (mm2):	3324.51		
Description of Changes:			

Included Cable No.	Conductor Type	Area (mm2)
1475-5	72 Fiber, single mode fiber optic riser cable inside innerduct	323.65
Pull Rope	Soft-Fiber Polyester	0.00
Spare Innerduct	25.4mm Smoothwall Innerduct	0.00
Spare Innerduct	25.4mm Smoothwall Innerduct	0.00
Spare Innerduct	25.4mm Smoothwall Innerduct	0.00

Conduit/Tray No:	6720	Reference:	E-655
Size:	103	Type:	RGS conduit
From:	6973	To:	6725
Total Fill (mm2):	323.65	Remarks:	Installed in OTD-1 contract.
Allowable Fill (mm2):	3324.51		
Description of Changes:			

Included Cable No.	Conductor Type	Area (mm2)
1477-4	72 Fiber, single mode fiber optic riser cable inside innerduct	323.65
Pull Rope	Soft-Fiber Polyester	0.00
Spare Innerduct	25.4mm Smoothwall Innerduct	0.00
Spare Innerduct	25.4mm Smoothwall Innerduct	0.00
Spare Innerduct	25.4mm Smoothwall Innerduct	0.00

Conduit/Tray No:	6724	Reference:	E-655
Size:	103	Type:	RGS conduit
From:	6719	To:	6729
Total Fill (mm2):	323.65	Remarks:	Installed in OTD-1 contract.
Allowable Fill (mm2):	3324.51		
Description of Changes:			

Included Cable No.	Conductor Type	Area (mm2)
1475-5	72 Fiber, single mode fiber optic riser cable inside innerduct	323.65
Pull Rope	Soft-Fiber Polyester	0.00
Spare Innerduct	25.4mm Smoothwall Innerduct	0.00
Spare Innerduct	25.4mm Smoothwall Innerduct	0.00
Spare Innerduct	25.4mm Smoothwall Innerduct	0.00

Conduit/Tray No:	6725	Reference:	E-655
Size:	103	Type:	RGS conduit
From:	6720	To:	6730
Total Fill (mm2):	323.65	Remarks:	Installed in OTD-1 contract.
Allowable Fill (mm2):	3324.51		
Description of Changes:			

Included Cable No.	Conductor Type	Area (mm2)
1477-4	72 Fiber, single mode fiber optic riser cable inside innerduct	323.65
Pull Rope	Soft-Fiber Polyester	0.00
Spare Innerduct	25.4mm Smoothwall Innerduct	0.00
Spare Innerduct	25.4mm Smoothwall Innerduct	0.00
Spare Innerduct	25.4mm Smoothwall Innerduct	0.00

Conduit/Tray No:	6729	Reference:	E-617, E-656
Size:	103	Type:	RGS conduit
From:	Hinge EW Girder Interface	To:	TOS/COM Vault
Total Fill (mm2):	323.65	Remarks:	Installed in OTD-1 contract.
Allowable Fill (mm2):	3324.51		
Description of Changes:			

Included Cable No.	Conductor Type	Area (mm2)
1475-5	72 Fiber, single mode fiber optic riser cable inside innerduct	323.65
Pull Rope	Soft-Fiber Polyester	0.00
Spare Innerduct	25.4mm Smoothwall Innerduct	0.00
Spare Innerduct	25.4mm Smoothwall Innerduct	0.00
Spare Innerduct	25.4mm Smoothwall Innerduct	0.00

EXISTING
CONDUIT AND TRAY SCHEDULE

E-1030

THIS PLAN ACCURATE FOR ELECTRICAL WORK ONLY.

REVISED BY	DATE REVISED
DATE 01/10	01/10
SYC	FW

CALCULATED/DESIGNED BY
CHECKED BY

DESIGN OVERSIGHT
BEHZAD GOLEMOHAMMADI

STATE OF CALIFORNIA - DEPARTMENT OF TRANSPORTATION
Caltrans

LAST REVISION 00-00-00
DATE PLOTTED => 06-MAY-2010
TIME PLOTTED => 18:46

FOR REDUCED PLANS ORIGINAL SCALE IS IN MILLIMETERS 0 20 40 60 80

DGN FILE =>04-0120f1_E-1030.dgn
USERNAME =>llorico

CU 04251

EA 0120F1

Conduit/Tray No:	6730	Reference:	E-617, E-656
Size:	103	Type:	RGS conduit
From:	Hinge EW Girder Interface	To:	TOS/COM Vault
Total Fill (mm2):	323.65	Remarks:	Installed in OTD-1 contract.
Allowable Fill (mm2):	3324.51		
Description of Changes:			

Included Cable No.	Conductor Type	Area (mm2)
1477-4	72 Fiber, single mode fiber optic riser cable inside innerduct	323.65
Pull Rope	Soft-Fiber Polyester	0.00
Spare Innerduct	25.4mm Smoothwall Innerduct	0.00
Spare Innerduct	25.4mm Smoothwall Innerduct	0.00
Spare Innerduct	25.4mm Smoothwall Innerduct	0.00

Conduit/Tray No:	6937	Reference:	E-655
Size:	103	Type:	RGS conduit
From:	15 kV Splice Cable Tray (Hinge EW)	To:	6700
Total Fill (mm2):	3115.90	Remarks:	Installed in Skyway contract. System ground cable is existing.
Allowable Fill (mm2):	3324.51		
Description of Changes:			

Included Cable No.	Conductor Type	Area (mm2)
1392	3-1/C #4/0, 15 KV, EPR insulation	2780.99
System Ground	500 kcmil, bare copper wire, stranded	334.91
Pull Rope	Soft-Fiber Polyester	0.00

Conduit/Tray No:	6972	Reference:	E-655
Size:	103	Type:	RGS conduit
From:	1T43 (on Skyway)	To:	6719
Total Fill (mm2):	323.65	Remarks:	Installed in OTD-1 contract.
Allowable Fill (mm2):	3324.51		
Description of Changes:			

Included Cable No.	Conductor Type	Area (mm2)
1475-5	72 Fiber, single mode fiber optic riser cable inside innerduct	323.65
Pull Rope	Soft-Fiber Polyester	0.00
Spare Innerduct	25.4mm Smoothwall Innerduct	0.00
Spare Innerduct	25.4mm Smoothwall Innerduct	0.00
Spare Innerduct	25.4mm Smoothwall Innerduct	0.00

DIST	COUNTY	ROUTE	KILOMETER POST TOTAL PROJECT	SHEET No	TOTAL SHEETS
04	SF,Ala	80	12.2/14.3 0.0/4.0	407a 10S32	1204

Syn Yee Chin 03/08/10
REGISTERED ELECTRICAL ENGINEER DATE

REGISTERED PROFESSIONAL ENGINEER
SYN YEE CHIN
No. 18186
Exp. 09/30/2011
ELECTRICAL
STATE OF CALIFORNIA

05-06-2010
PLANS APPROVAL DATE

PB AMERICAS, Inc.
A Parsons Brinckerhoff Company
303 Second St., Suite 700N
San Francisco, CA 94107-1317

The State of California or its officers or agents shall not be responsible for the accuracy or completeness of electronic copies of this plan sheet.

Caltrans now has a web site! To get to the web site, go to http://www.dot.ca.gov

REQUEST FOR INFORMATION NOT ADDRESSED IN THIS CCO REMAIN IN FORCE

MARK	DATE	REVISIONS DESCRIPTIONS	BY	CH'D	CCO#
0	03/08/10	MEP INTEGRATION	SYC	FW	110

CONTRACT CHANGE ORDER NO._____
SHEET _____ OF _____

Conduit/Tray No:	6973	Reference:	E-655
Size:	103	Type:	RGS conduit
From:	1T43 (on Skyway)	To:	6720
Total Fill (mm2):	323.65	Remarks:	Installed in OTD-1 contract.
Allowable Fill (mm2):	3324.51		
Description of Changes:			

Included Cable No.	Conductor Type	Area (mm2)
1477-4	72 Fiber, single mode fiber optic riser cable inside innerduct	323.65
Pull Rope	Soft-Fiber Polyester	0.00
Spare Innerduct	25.4mm Smoothwall Innerduct	0.00
Spare Innerduct	25.4mm Smoothwall Innerduct	0.00
Spare Innerduct	25.4mm Smoothwall Innerduct	0.00

Conduit/Tray No:	7897	Reference:	E-833A
Size:	103	Type:	Liquidtight flex metal conduit
From:	2T42	To:	7901
Total Fill (mm2):	323.65	Remarks:	Installed in Skyway contract.
Allowable Fill (mm2):	3275.44		
Description of Changes:			

Included Cable No.	Conductor Type	Area (mm2)
2475-4	72 Fiber, single mode fiber optic riser cable inside innerduct	323.65
Pull Rope	Soft-Fiber Polyester	0.00
Spare Innerduct	25.4mm Smoothwall Innerduct	0.00
Spare Innerduct	25.4mm Smoothwall Innerduct	0.00
Spare Innerduct	25.4mm Smoothwall Innerduct	0.00

EXISTING
CONDUIT AND TRAY SCHEDULE

E-1031

THIS PLAN ACCURATE FOR ELECTRICAL WORK ONLY.

DATE	BY	REVISED
01/10	SYC	DATE REVISED
01/10	FW	CALCULATED/DESIGNED BY
		CHECKED BY

DESIGN OVERSIGHT
BEHZAD GOLEMOHAMMADI

STATE OF CALIFORNIA - DEPARTMENT OF TRANSPORTATION
Caltrans

FOR REDUCED PLANS ORIGINAL SCALE IS IN MILLIMETERS 0 20 40 60 80

DGN FILE =>04-0120f1_E-1031.dgn
USERNAME =>llorico

CU 04251

EA 0120F1

LAST REVISION 00-00-00
DATE PLOTTED => 06-MAY-2010
TIME PLOTTED => 18:46

DIST	COUNTY	ROUTE	KILOMETER POST TOTAL PROJECT	SHEET No	TOTAL SHEETS
04	SF, Ala	80	12.2/14.3 0.0/4.0	407a 10S33	1204

Syn Yee Chin 03/08/10
REGISTERED ELECTRICAL ENGINEER DATE

05-06-2010
PLANS APPROVAL DATE

REGISTERED PROFESSIONAL ENGINEER
SYN YEE CHIN
No. 18186
Exp. 09/30/2011
ELECTRICAL
STATE OF CALIFORNIA

PB AMERICAS, Inc.
A Parsons Brinckerhoff Company
303 Second St., Suite 700N
San Francisco, CA 94107-1317

The State of California or its officers or agents shall not be responsible for the accuracy or completeness of electronic copies of this plan sheet.

Caltrans now has a web site! To get to the web site, go to http://www.dot.ca.gov

REQUEST FOR INFORMATION NOT ADDRESSED IN THIS CCO REMAIN IN FORCE

MARK	DATE	DESCRIPTIONS	BY	CH'D	CCO#
		REVISIONS			
0	03/08/10	MEP INTEGRATION	SYC	FW	110

CONTRACT CHANGE ORDER NO._____
SHEET _____ OF _____

DESIGNED BY	CALCULATED/ CHECKED BY	DATE	REVISED BY
SYC	FW	01/10	DATE REVISED

DESIGN OVERSIGHT
BEHZAD GOLEMOHAMMADI

STATE OF CALIFORNIA - DEPARTMENT OF TRANSPORTATION
Caltrans

Conduit/Tray No: 7901 | Reference: E-833A
Size: 103 | Type: RGS conduit
From: 7897 | To: 7905
Total Fill (mm2): 323.65 | Remarks: Installed in Skyway contract.
Allowable Fill (mm2): 3324.51
Description of Changes:

Included Cable No.	Conductor Type	Area (mm2)
2475-4	72 Fiber, single mode fiber optic riser cable inside innerduct	323.65
Pull Rope	Soft-Fiber Polyester	0.00
Spare Innerduct	25.4mm Smoothwall Innerduct	0.00
Spare Innerduct	25.4mm Smoothwall Innerduct	0.00
Spare Innerduct	25.4mm Smoothwall Innerduct	0.00

Conduit/Tray No: 7905 | Reference: E-833A
Size: 103 | Type: Liquidtight flex metal conduit
From: 7901 | To: 2T43 (on Skyway)
Total Fill (mm2): 323.65 | Remarks: Installed in Skyway contract.
Allowable Fill (mm2): 3275.44
Description of Changes:

Included Cable No.	Conductor Type	Area (mm2)
2475-4	72 Fiber, single mode fiber optic riser cable inside innerduct	323.65
Pull Rope	Soft-Fiber Polyester	0.00
Spare Innerduct	25.4mm Smoothwall Innerduct	0.00
Spare Innerduct	25.4mm Smoothwall Innerduct	0.00
Spare Innerduct	25.4mm Smoothwall Innerduct	0.00

Conduit/Tray No: 7926 | Reference: E-833A
Size: 103 | Type: Liquidtight flex metal conduit
From: 2T12 | To: 7927
Total Fill (mm2): 3115.90 | Remarks: Installed in Skyway contract. System Ground cable is existing.
Allowable Fill (mm2): 3275.44
Description of Changes:

Included Cable No.	Conductor Type	Area (mm2)
2392	3-1/C #4/0, 15 KV, EPR insulation	2780.99
System Ground	500 kcmil, bare copper wire, stranded	334.91
Pull Rope	Soft-Fiber Polyester	0.00

Conduit/Tray No: 7927 | Reference: E-833A
Size: 103 | Type: RGS conduit
From: 7926 | To: 7928
Total Fill (mm2): 3115.90 | Remarks: Installed in Skyway contract. System Ground cable is existing.
Allowable Fill (mm2): 3324.51
Description of Changes:

Included Cable No.	Conductor Type	Area (mm2)
2392	3-1/C #4/0, 15 KV, EPR insulation	2780.99
System Ground	500 kcmil, bare copper wire, stranded	334.91
Pull Rope	Soft-Fiber Polyester	0.00

Conduit/Tray No: 7928 | Reference: E-833A
Size: 103 | Type: Liquidtight flex metal conduit
From: 7927 | To: 2T13 (on Skyway)
Total Fill (mm2): 3115.90 | Remarks: Installed in Skyway contract. System Ground cable is existing.
Allowable Fill (mm2): 3275.44
Description of Changes:

Included Cable No.	Conductor Type	Area (mm2)
2392	3-1/C #4/0, 15 KV, EPR insulation	2780.99
System Ground	500 kcmil, bare copper wire, stranded	334.91
Pull Rope	Soft-Fiber Polyester	0.00

Conduit/Tray No: Wireway #12E | Reference: E-823
Size: 203.2 | Type: 203 mm x 203 mm Wireway, Nema 4X
From: Platform #12E | To: Platform #12E
Total Fill (mm2): 30.19 | Remarks: Installed in Skyway contract.
Allowable Fill (mm2): 8258.05
Description of Changes:

Included Cable No.	Conductor Type	Area (mm2)
2475-4D	12 Fiber, single mode fiber optic cable	30.19

EXISTING
CONDUIT AND TRAY SCHEDULE

E-1032

LAST REVISION 00-00-00
DATE PLOTTED => 06-MAY-2010
TIME PLOTTED => 18:46

THIS PLAN ACCURATE FOR ELECTRICAL WORK ONLY.

FOR REDUCED PLANS ORIGINAL SCALE IS IN MILLIMETERS 0 20 40 60 80

DGN FILE =>04-0120f1_E-1032.dgn
USERNAME =>llorico

CU 04251 EA 0120F1

DIST	COUNTY	ROUTE	KILOMETER POST TOTAL PROJECT	SHEET No	TOTAL SHEETS
04	SF, Ala	80	12.2/14.3 0.0/4.0	407a 10S34	1204

Caltrans Metric

Syn Yee Chin 03/08/10
REGISTERED ELECTRICAL ENGINEER DATE

05-06-2010
PLANS APPROVAL DATE

REGISTERED PROFESSIONAL ENGINEER
SYN YEE CHIN
No. 18186
Exp. 09/30/2011
ELECTRICAL
STATE OF CALIFORNIA

PB AMERICAS, Inc.
A Parsons Brinckerhoff Company
303 Second St., Suite 700N
San Francisco, CA 94107-1317

The State of California or its officers or agents shall not be responsible for the accuracy or completeness of electronic copies of this plan sheet.

Caltrans now has a web site! To get to the web site, go to http://www.dot.ca.gov

REQUEST FOR INFORMATION NOT ADDRESSED IN THIS CCO REMAIN IN FORCE

MARK	DATE	REVISIONS DESCRIPTIONS	BY	CH'D	CCO#
0	03/08/10	MEP INTEGRATION	SYC	FW	110

CONTRACT CHANGE ORDER NO._____
SHEET _____ OF _____

Conduit/Tray No:	2544A	Reference:	E-836
Size:	103	Type:	Liquidtight flex metal conduit
From:	2T10	To:	15 kV Splice Cable Tray (Hinge BE)
Total Fill (mm2):	2780.99	Remarks:	
Allowable Fill (mm2):	3275.44		
Description of Changes:			

Included Cable No.	Conductor Type	Area (mm2)
2391	3-1/C #4/0, 15 KV, EPR insulation	2780.99
Pull Rope	Soft-Fiber Polyester	0.00

Conduit/Tray No:	2544B	Reference:	E-836
Size:	103	Type:	Liquidtight flex metal conduit
From:	15 kV Splice Cable Tray (Hinge BE)	To:	2T10
Total Fill (mm2):	2780.99	Remarks:	
Allowable Fill (mm2):	3275.44		
Description of Changes:			

Included Cable No.	Conductor Type	Area (mm2)
2391	3-1/C #4/0, 15 KV, EPR insulation	2780.99
Pull Rope	Soft-Fiber Polyester	0.00

Conduit/Tray No:	2593A	Reference:	E-836
Size:	103	Type:	Liquidtight flex metal conduit
From:	2T11	To:	15 kV Splice Cable Tray (Hinge CE)
Total Fill (mm2):	2780.99	Remarks:	
Allowable Fill (mm2):	3275.44		
Description of Changes:			

Included Cable No.	Conductor Type	Area (mm2)
2392	3-1/C #4/0, 15 KV, EPR insulation	2780.99
Pull Rope	Soft-Fiber Polyester	0.00

Conduit/Tray No:	2593B	Reference:	E-836
Size:	103	Type:	Liquidtight flex metal conduit
From:	15 kV Splice Cable Tray (Hinge CE)	To:	2T11
Total Fill (mm2):	2780.99	Remarks:	
Allowable Fill (mm2):	3275.44		
Description of Changes:			

Included Cable No.	Conductor Type	Area (mm2)
2392	3-1/C #4/0, 15 KV, EPR insulation	2780.99
Pull Rope	Soft-Fiber Polyester	0.00

Conduit/Tray No:	4852A	Reference:	E-663
Size:	103	Type:	Liquidtight flex metal conduit
From:	1T40	To:	TOS Splice Cable Tray (SP#09W)
Total Fill (mm2):	323.65	Remarks:	
Allowable Fill (mm2):	4339.96		
Description of Changes:			

Included Cable No.	Conductor Type	Area (mm2)
1475-4	72 Fiber, single mode fiber optic riser cable	323.65
Pull Rope	Soft-Fiber Polyester	0.00

Conduit/Tray No:	4852B	Reference:	E-663
Size:	103	Type:	Liquidtight flex metal conduit
From:	TOS Splice Cable Tray (SP#09W)	To:	1T40
Total Fill (mm2):	323.65	Remarks:	
Allowable Fill (mm2):	4339.96		
Description of Changes:			

Included Cable No.	Conductor Type	Area (mm2)
1475-4	72 Fiber, single mode fiber optic riser cable	323.65
Pull Rope	Soft-Fiber Polyester	0.00

Conduit/Tray No:	4862A	Reference:	E-663
Size:	103	Type:	Liquidtight flex metal conduit
From:	1T40	To:	TOS Splice Cable Tray (SP#10W)
Total Fill (mm2):	323.65	Remarks:	
Allowable Fill (mm2):	4339.96		
Description of Changes:			

Included Cable No.	Conductor Type	Area (mm2)
1475-4	72 Fiber, single mode fiber optic riser cable	323.65
Pull Rope	Soft-Fiber Polyester	0.00

NEW
CONDUIT AND TRAY SCHEDULE

E-1033

DATE	BY	REVISED
01/10	FW	DATE REVISED

CALCULATED/DESIGNED BY: SYC
CHECKED BY: FW

DESIGN OVERSIGHT
BEHZAD GOLEMOHAMMADI

STATE OF CALIFORNIA - DEPARTMENT OF TRANSPORTATION
Caltrans

THIS PLAN ACCURATE FOR ELECTRICAL WORK ONLY.

FOR REDUCED PLANS ORIGINAL SCALE IS IN MILLIMETERS 0 20 40 60 80

DGN FILE =>04-0120f1_E-1033.dgn
USERNAME =>llorico

CU 04251

EA 0120F1

LAST REVISION 00-00-00
DATE PLOTTED => 06-MAY-2010
TIME PLOTTED => 18:47

DIST	COUNTY	ROUTE	KILOMETER POST TOTAL PROJECT	SHEET No	TOTAL SHEETS
04	SF, Ala	80	12.2/14.3 0.0/4.0	407a 10S35	1204

Syn Yee Chin 03/08/10
REGISTERED ELECTRICAL ENGINEER DATE

05-06-2010
PLANS APPROVAL DATE

REGISTERED PROFESSIONAL ENGINEER — SYN YEE CHIN No. 18186 Exp. 09/30/2011 ELECTRICAL — STATE OF CALIFORNIA

PB AMERICAS, Inc.
A Parsons Brinckerhoff Company
303 Second St., Suite 700N
San Francisco, CA 94107-1317

The State of California or its officers or agents shall not be responsible for the accuracy or completeness of electronic copies of this plan sheet.

Caltrans now has a web site! To get to the web site, go to http://www.dot.ca.gov

REQUEST FOR INFORMATION NOT ADDRESSED IN THIS CCO REMAIN IN FORCE

MARK	DATE	REVISIONS DESCRIPTIONS	BY	CH'D	CCO#
0	03/08/10	MEP INTEGRATION	SYC	FW	110

CONTRACT CHANGE ORDER NO._____
SHEET _____ OF _____

Conduit/Tray No:	4862B	Reference:	E-663
Size:	103	Type:	Liquidtight flex metal conduit
From:	TOS Splice Cable Tray (SP#10W)	To:	1T40
Total Fill (mm2):	323.65	Remarks:	
Allowable Fill (mm2):	4339.96		
Description of Changes:			

Included Cable No.	Conductor Type	Area (mm2)
1475-4	72 Fiber, single mode fiber optic riser cable	323.65
Pull Rope	Soft-Fiber Polyester	0.00

Conduit/Tray No:	4872A	Reference:	E-663
Size:	103	Type:	Liquidtight flex metal conduit
From:	1T40	To:	TOS Splice Cable Tray (SP#11W)
Total Fill (mm2):	323.65	Remarks:	
Allowable Fill (mm2):	4339.96		
Description of Changes:			

Included Cable No.	Conductor Type	Area (mm2)
1475-4	72 Fiber, single mode fiber optic riser cable	323.65
Pull Rope	Soft-Fiber Polyester	0.00

Conduit/Tray No:	4872B	Reference:	E-663
Size:	103	Type:	Liquidtight flex metal conduit
From:	TOS Splice Cable Tray (SP#11W)	To:	1T40
Total Fill (mm2):	323.65	Remarks:	
Allowable Fill (mm2):	4339.96		
Description of Changes:			

Included Cable No.	Conductor Type	Area (mm2)
1475-4	72 Fiber, single mode fiber optic riser cable	323.65
Pull Rope	Soft-Fiber Polyester	0.00

Conduit/Tray No:	4881A	Reference:	E-663
Size:	103	Type:	Liquidtight flex metal conduit
From:	1T40	To:	TOS Splice Cable Tray (SP#12W)
Total Fill (mm2):	323.65	Remarks:	
Allowable Fill (mm2):	4339.96		
Description of Changes:			

Included Cable No.	Conductor Type	Area (mm2)
1475-4	72 Fiber, single mode fiber optic riser cable	323.65
Pull Rope	Soft-Fiber Polyester	0.00

Conduit/Tray No:	4881B	Reference:	E-663
Size:	103	Type:	Liquidtight flex metal conduit
From:	TOS Splice Cable Tray (SP#12W)	To:	1T40
Total Fill (mm2):	323.65	Remarks:	
Allowable Fill (mm2):	4339.96		
Description of Changes:			

Included Cable No.	Conductor Type	Area (mm2)
1475-4	72 Fiber, single mode fiber optic riser cable	323.65
Pull Rope	Soft-Fiber Polyester	0.00

Conduit/Tray No:	4912A	Reference:	E-663
Size:	103	Type:	Liquidtight flex metal conduit
From:	1T41	To:	TOS Splice Cable Tray (SP#15W)
Total Fill (mm2):	323.65	Remarks:	
Allowable Fill (mm2):	4339.96		
Description of Changes:			

Included Cable No.	Conductor Type	Area (mm2)
1475-4	72 Fiber, single mode fiber optic riser cable	323.65
Pull Rope	Soft-Fiber Polyester	0.00

Conduit/Tray No:	4912B	Reference:	E-663
Size:	103	Type:	Liquidtight flex metal conduit
From:	TOS Splice Cable Tray (SP#15W)	To:	1T41
Total Fill (mm2):	323.65	Remarks:	
Allowable Fill (mm2):	4339.96		
Description of Changes:			

Included Cable No.	Conductor Type	Area (mm2)
1475-4	72 Fiber, single mode fiber optic riser cable	323.65
Pull Rope	Soft-Fiber Polyester	0.00

NEW
CONDUIT AND TRAY SCHEDULE

E-1034

REVISED BY	DATE REVISED
SYC	01/10
FW	
CALCULATED/ DESIGNED BY	CHECKED BY
DESIGN OVERSIGHT	BEHZAD GOLEMOHAMMADI

STATE OF CALIFORNIA - DEPARTMENT OF TRANSPORTATION
Caltrans

THIS PLAN ACCURATE FOR ELECTRICAL WORK ONLY.

FOR REDUCED PLANS ORIGINAL SCALE IS IN MILLIMETERS 0 20 40 60 80

DGN FILE =>04-0120f1_E-1034.dgn
USERNAME =>llorico

CU 04251

EA 0120F1

DATE PLOTTED => 06-MAY-2010
TIME PLOTTED => 18:47

LAST REVISION 00-00-00

DIST	COUNTY	ROUTE	KILOMETER POST TOTAL PROJECT	SHEET No	TOTAL SHEETS
04	SF, Ala	80	12.2/14.3 0.0/4.0	407a 10S36	1204

SynYee Chin 03/08/10
REGISTERED ELECTRICAL ENGINEER DATE

05-06-2010
PLANS APPROVAL DATE

REGISTERED PROFESSIONAL ENGINEER — SYN YEE CHIN No. 18186 Exp. 09/30/2011 ELECTRICAL — STATE OF CALIFORNIA

PB AMERICAS, Inc.
A Parsons Brinckerhoff Company
303 Second St., Suite 700N
San Francisco, CA 94107-1317

The State of California or its officers or agents shall not be responsible for the accuracy or completeness of electronic copies of this plan sheet.

Caltrans now has a web site! To get to the web site, go to http://www.dot.ca.gov

REQUEST FOR INFORMATION NOT ADDRESSED IN THIS CCO REMAIN IN FORCE

MARK	DATE	REVISIONS DESCRIPTIONS	BY	CH'D	CCO#
0	03/08/10	MEP INTEGRATION	SYC	FW	110

CONTRACT CHANGE ORDER NO._____
SHEET _____ OF _____

Conduit/Tray No:	4922A	Reference:	E-663
Size:	103	Type:	Liquidtight flex metal conduit
From:	1T41	To:	TOS Splice Cable Tray (SP#16W)
Total Fill (mm2):	323.65	Remarks:	
Allowable Fill (mm2):	4339.96		
Description of Changes:			

Included Cable No.	Conductor Type	Area (mm2)
1475-4	72 Fiber, single mode fiber optic riser cable	323.65
Pull Rope	Soft-Fiber Polyester	0.00

Conduit/Tray No:	4922B	Reference:	E-663
Size:	103	Type:	Liquidtight flex metal conduit
From:	TOS Splice Cable Tray (SP#16W)	To:	1T41
Total Fill (mm2):	323.65	Remarks:	
Allowable Fill (mm2):	4339.96		
Description of Changes:			

Included Cable No.	Conductor Type	Area (mm2)
1475-4	72 Fiber, single mode fiber optic riser cable	323.65
Pull Rope	Soft-Fiber Polyester	0.00

Conduit/Tray No:	4931A	Reference:	E-663
Size:	103	Type:	Liquidtight flex metal conduit
From:	1T42	To:	TOS Splice Cable Tray (SP#17W)
Total Fill (mm2):	323.65	Remarks:	
Allowable Fill (mm2):	4339.96		
Description of Changes:			

Included Cable No.	Conductor Type	Area (mm2)
1475-4	72 Fiber, single mode fiber optic riser cable	323.65
Pull Rope	Soft-Fiber Polyester	0.00

Conduit/Tray No:	4931B	Reference:	E-663
Size:	103	Type:	Liquidtight flex metal conduit
From:	TOS Splice Cable Tray (SP#17W)	To:	1T42
Total Fill (mm2):	323.65	Remarks:	
Allowable Fill (mm2):	4339.96		
Description of Changes:			

Included Cable No.	Conductor Type	Area (mm2)
1475-4	72 Fiber, single mode fiber optic riser cable	323.65
Pull Rope	Soft-Fiber Polyester	0.00

Conduit/Tray No:	4942A	Reference:	E-663
Size:	103	Type:	Liquidtight flex metal conduit
From:	1T42	To:	TOS Splice Cable Tray (SP#18W)
Total Fill (mm2):	323.65	Remarks:	
Allowable Fill (mm2):	4339.96		
Description of Changes:			

Included Cable No.	Conductor Type	Area (mm2)
1475-4	72 Fiber, single mode fiber optic riser cable	323.65
Pull Rope	Soft-Fiber Polyester	0.00

Conduit/Tray No:	4942B	Reference:	E-663
Size:	103	Type:	Liquidtight flex metal conduit
From:	TOS Splice Cable Tray (SP#18W)	To:	1T42
Total Fill (mm2):	323.65	Remarks:	
Allowable Fill (mm2):	4339.96		
Description of Changes:			

Included Cable No.	Conductor Type	Area (mm2)
1475-4	72 Fiber, single mode fiber optic riser cable	323.65
Pull Rope	Soft-Fiber Polyester	0.00

Conduit/Tray No:	4962A	Reference:	E-663
Size:	103	Type:	Liquidtight flex metal conduit
From:	1T42	To:	TOS Splice Cable Tray (SP#20W)
Total Fill (mm2):	323.65	Remarks:	
Allowable Fill (mm2):	4339.96		
Description of Changes:			

Included Cable No.	Conductor Type	Area (mm2)
1475-4	72 Fiber, single mode fiber optic riser cable	323.65
Pull Rope	Soft-Fiber Polyester	0.00

NEW
CONDUIT AND TRAY SCHEDULE

E-1035

REVISED BY	DATE REVISED
SYC	01/10
FW	

CALCULATED/DESIGNED BY
CHECKED BY

DESIGN OVERSIGHT
BEHZAD GOLEMOHAMMADI

STATE OF CALIFORNIA - DEPARTMENT OF TRANSPORTATION
Caltrans

THIS PLAN ACCURATE FOR ELECTRICAL WORK ONLY.

FOR REDUCED PLANS ORIGINAL SCALE IS IN MILLIMETERS 0 20 40 60 80

DGN FILE =>04-0120f1_E-1035.dgn
USERNAME =>llorico

CU 04251

EA 0120F1

LAST REVISION 00-00-00
DATE PLOTTED => 06-MAY-2010
TIME PLOTTED => 18:47

DIST	COUNTY	ROUTE	KILOMETER POST TOTAL PROJECT	SHEET No	TOTAL SHEETS
04	SF, Ala	80	12.2/14.3 0.0/4.0	407a 10S37	1204

Syn Yee Chin 03/08/10
REGISTERED ELECTRICAL ENGINEER DATE

05-06-2010
PLANS APPROVAL DATE

REGISTERED PROFESSIONAL ENGINEER
SYN YEE CHIN
No. 18186
Exp. 09/30/2011
ELECTRICAL
STATE OF CALIFORNIA

PB AMERICAS, Inc.
A Parsons Brinckerhoff Company
303 Second St., Suite 700N
San Francisco, CA 94107-1317

The State of California or its officers or agents shall not be responsible for the accuracy or completeness of electronic copies of this plan sheet.

Caltrans now has a web site! To get to the web site, go to http://www.dot.ca.gov

REQUEST FOR INFORMATION NOT ADDRESSED IN THIS CCO REMAIN IN FORCE

MARK	DATE	REVISIONS DESCRIPTIONS	BY	CH'D	CCO#
0	03/08/10	MEP INTEGRATION	SYC	FW	110

CONTRACT CHANGE ORDER NO._____
SHEET _____ OF _____

Conduit/Tray No:	4962B	Reference:	E-663
Size:	103	Type:	Liquidtight flex metal conduit
From:	TOS Splice Cable Tray (SP#20W)	To:	1T42
Total Fill (mm2):	323.65	Remarks:	
Allowable Fill (mm2):	4339.96		
Description of Changes:			

Included Cable No.	Conductor Type	Area (mm2)
1475-4	72 Fiber, single mode fiber optic riser cable	323.65
Pull Rope	Soft-Fiber Polyester	0.00

Conduit/Tray No:	4972A	Reference:	E-663
Size:	103	Type:	Liquidtight flex metal conduit
From:	1T43	To:	TOS Splice Cable Tray (SP#21W)
Total Fill (mm2):	323.65	Remarks:	
Allowable Fill (mm2):	4339.96		
Description of Changes:			

Included Cable No.	Conductor Type	Area (mm2)
1475-4	72 Fiber, single mode fiber optic riser cable	323.65
Pull Rope	Soft-Fiber Polyester	0.00

Conduit/Tray No:	4972B	Reference:	E-663
Size:	103	Type:	Liquidtight flex metal conduit
From:	TOS Splice Cable Tray (SP#21W)	To:	1T43
Total Fill (mm2):	323.65	Remarks:	
Allowable Fill (mm2):	4339.96		
Description of Changes:			

Included Cable No.	Conductor Type	Area (mm2)
1475-4	72 Fiber, single mode fiber optic riser cable	323.65
Pull Rope	Soft-Fiber Polyester	0.00

Conduit/Tray No:	4982A	Reference:	E-663
Size:	103	Type:	Liquidtight flex metal conduit
From:	1T41	To:	TOS Splice Cable Tray (SP#13W)
Total Fill (mm2):	323.65	Remarks:	
Allowable Fill (mm2):	4339.96		
Description of Changes:			

Included Cable No.	Conductor Type	Area (mm2)
1475-4	72 Fiber, single mode fiber optic riser cable	323.65
Pull Rope	Soft-Fiber Polyester	0.00

Conduit/Tray No:	4982B	Reference:	E-663
Size:	103	Type:	Liquidtight flex metal conduit
From:	TOS Splice Cable Tray (SP#13W)	To:	1T41
Total Fill (mm2):	323.65	Remarks:	
Allowable Fill (mm2):	4339.96		
Description of Changes:			

Included Cable No.	Conductor Type	Area (mm2)
1475-4	72 Fiber, single mode fiber optic riser cable	323.65
Pull Rope	Soft-Fiber Polyester	0.00

Conduit/Tray No:	5852A	Reference:	E-836
Size:	103	Type:	Liquidtight flex metal conduit
From:	2T40	To:	TOS Splice Cable Tray (SP#09E)
Total Fill (mm2):	323.65	Remarks:	
Allowable Fill (mm2):	4339.96		
Description of Changes:			

Included Cable No.	Conductor Type	Area (mm2)
2475-4	72 Fiber, single mode fiber optic riser cable	323.65
Pull Rope	Soft-Fiber Polyester	0.00

Conduit/Tray No:	5852B	Reference:	E-836
Size:	103	Type:	Liquidtight flex metal conduit
From:	TOS Splice Cable Tray (SP#09E)	To:	2T40
Total Fill (mm2):	323.65	Remarks:	
Allowable Fill (mm2):	4339.96		
Description of Changes:			

Included Cable No.	Conductor Type	Area (mm2)
2475-4	72 Fiber, single mode fiber optic riser cable	323.65
Pull Rope	Soft-Fiber Polyester	0.00

NEW
CONDUIT AND TRAY SCHEDULE

E-1036

DATE	REVISED BY
01/10	FW

CALCULATED/DESIGNED BY: SYC
CHECKED BY: FW

DESIGN OVERSIGHT
BEHZAD GOLEMOHAMMADI

STATE OF CALIFORNIA - DEPARTMENT OF TRANSPORTATION
Caltrans

THIS PLAN ACCURATE FOR ELECTRICAL WORK ONLY.

FOR REDUCED PLANS ORIGINAL SCALE IS IN MILLIMETERS 0 20 40 60 80

DGN FILE =>04-0120f1_E-1036.dgn
USERNAME =>llorico

CU 04251

EA 0120F1

LAST REVISION 00-00-00
DATE PLOTTED => 06-MAY-2010
TIME PLOTTED => 18:47

DIST	COUNTY	ROUTE	KILOMETER POST TOTAL PROJECT	SHEET No	TOTAL SHEETS
04	SF, Ala	80	12.2/14.3 0.0/4.0	407a 10S38	1204

Syn Yee Chin 03/08/10
REGISTERED ELECTRICAL ENGINEER DATE

05-06-2010
PLANS APPROVAL DATE

REGISTERED PROFESSIONAL ENGINEER
SYN YEE CHIN
No. 18186
Exp. 09/30/2011
ELECTRICAL
STATE OF CALIFORNIA

PB AMERICAS, Inc.
A Parsons Brinckerhoff Company
303 Second St., Suite 700N
San Francisco, CA 94107-1317

The State of California or its officers or agents shall not be responsible for the accuracy or completeness of electronic copies of this plan sheet.

Caltrans now has a web site! To get to the web site, go to http://www.dot.ca.gov

REQUEST FOR INFORMATION NOT ADDRESSED IN THIS CCO REMAIN IN FORCE

MARK	DATE	REVISIONS DESCRIPTIONS	BY	CH'D	CCO#
0	03/08/10	MEP INTEGRATION	SYC	FW	110

CONTRACT CHANGE ORDER NO._____
SHEET _____ OF _____

Conduit/Tray No:	5862A	Reference:	E-836
Size:	103	Type:	Liquidtight flex metal conduit
From:	2T40	To:	TOS Splice Cable Tray (SP#10E)
Total Fill (mm2):	323.65	Remarks:	
Allowable Fill (mm2):	4339.96		
Description of Changes:			

Included Cable No.	Conductor Type	Area (mm2)
2475-4	72 Fiber, single mode fiber optic riser cable	323.65
Pull Rope	Soft-Fiber Polyester	0.00

Conduit/Tray No:	5862B	Reference:	E-836
Size:	103	Type:	Liquidtight flex metal conduit
From:	TOS Splice Cable Tray (SP#10E)	To:	2T40
Total Fill (mm2):	323.65	Remarks:	
Allowable Fill (mm2):	4339.96		
Description of Changes:			

Included Cable No.	Conductor Type	Area (mm2)
2475-4	72 Fiber, single mode fiber optic riser cable	323.65
Pull Rope	Soft-Fiber Polyester	0.00

Conduit/Tray No:	5872A	Reference:	E-836
Size:	103	Type:	Liquidtight flex metal conduit
From:	2T40	To:	TOS Splice Cable Tray (SP#11E)
Total Fill (mm2):	323.65	Remarks:	
Allowable Fill (mm2):	4339.96		
Description of Changes:			

Included Cable No.	Conductor Type	Area (mm2)
2475-4	72 Fiber, single mode fiber optic riser cable	323.65
Pull Rope	Soft-Fiber Polyester	0.00

Conduit/Tray No:	5872B	Reference:	E-836
Size:	103	Type:	Liquidtight flex metal conduit
From:	TOS Splice Cable Tray (SP#11E)	To:	2T40
Total Fill (mm2):	323.65	Remarks:	
Allowable Fill (mm2):	4339.96		
Description of Changes:			

Included Cable No.	Conductor Type	Area (mm2)
2475-4	72 Fiber, single mode fiber optic riser cable	323.65
Pull Rope	Soft-Fiber Polyester	0.00

Conduit/Tray No:	5882A	Reference:	E-836
Size:	103	Type:	Liquidtight flex metal conduit
From:	2T40	To:	TOS Splice Cable Tray (SP#12E)
Total Fill (mm2):	323.65	Remarks:	
Allowable Fill (mm2):	4339.96		
Description of Changes:			

Included Cable No.	Conductor Type	Area (mm2)
2475-4	72 Fiber, single mode fiber optic riser cable	323.65
Pull Rope	Soft-Fiber Polyester	0.00

Conduit/Tray No:	5882B	Reference:	E-836
Size:	103	Type:	Liquidtight flex metal conduit
From:	TOS Splice Cable Tray (SP#12E)	To:	2T40
Total Fill (mm2):	323.65	Remarks:	
Allowable Fill (mm2):	4339.96		
Description of Changes:			

Included Cable No.	Conductor Type	Area (mm2)
2475-4	72 Fiber, single mode fiber optic riser cable	323.65
Pull Rope	Soft-Fiber Polyester	0.00

Conduit/Tray No:	5891A	Reference:	E-836
Size:	103	Type:	Liquidtight flex metal conduit
From:	2T41	To:	TOS Splice Cable Tray (SP#13E)
Total Fill (mm2):	323.65	Remarks:	
Allowable Fill (mm2):	4339.96		
Description of Changes:			

Included Cable No.	Conductor Type	Area (mm2)
2475-4	72 Fiber, single mode fiber optic riser cable	323.65
Pull Rope	Soft-Fiber Polyester	0.00

NEW
CONDUIT AND TRAY SCHEDULE

E-1037

REVISED BY	DATE REVISED
SYC	01/10
FW	
CALCULATED/ DESIGNED BY	CHECKED BY
BEHZAD GOLEMOHAMMADI	
DESIGN OVERSIGHT	

STATE OF CALIFORNIA - DEPARTMENT OF TRANSPORTATION
Caltrans

THIS PLAN ACCURATE FOR ELECTRICAL WORK ONLY.

FOR REDUCED PLANS ORIGINAL SCALE IS IN MILLIMETERS 0 20 40 60 80

DGN FILE =>04-0120f1_E-1037.dgn
USERNAME =>llorico

CU 04251

EA 0120F1

LAST REVISION 00-00-00
DATE PLOTTED => 06-MAY-2010
TIME PLOTTED => 18:47

DIST	COUNTY	ROUTE	KILOMETER POST TOTAL PROJECT	SHEET No	TOTAL SHEETS
04	SF, Ala	80	12.2/14.3 0.0/4.0	407a 10S39	1204

Syn Yee Chin 03/08/10
REGISTERED ELECTRICAL ENGINEER DATE

05-06-2010
PLANS APPROVAL DATE

REGISTERED PROFESSIONAL ENGINEER — SYN YEE CHIN No. 18186 Exp. 09/30/2011 ELECTRICAL — STATE OF CALIFORNIA

PB AMERICAS, Inc.
A Parsons Brinckerhoff Company
303 Second St., Suite 700N
San Francisco, CA 94107-1317

The State of California or its officers or agents shall not be responsible for the accuracy or completeness of electronic copies of this plan sheet.

Caltrans now has a web site! To get to the web site, go to http://www.dot.ca.gov

REQUEST FOR INFORMATION NOT ADDRESSED IN THIS CCO REMAIN IN FORCE

MARK	DATE	REVISIONS DESCRIPTIONS	BY	CH'D	CCO#
0	03/08/10	MEP INTEGRATION	SYC	FW	110

CONTRACT CHANGE ORDER NO._____
SHEET _____ OF _____

Conduit/Tray No:	5891B	Reference:	E-836
Size:	103	Type:	Liquidtight flex metal conduit
From:	TOS Splice Cable Tray (SP#13E)	To:	2T41
Total Fill (mm2):	323.65	Remarks:	
Allowable Fill (mm2):	4339.96		
Description of Changes:			

Included Cable No.	Conductor Type	Area (mm2)
2475-4	72 Fiber, single mode fiber optic riser cable	323.65
Pull Rope	Soft-Fiber Polyester	0.00

Conduit/Tray No:	5912A	Reference:	E-836
Size:	103	Type:	Liquidtight flex metal conduit
From:	2T41	To:	TOS Splice Cable Tray (SP#15E)
Total Fill (mm2):	323.65	Remarks:	
Allowable Fill (mm2):	4339.96		
Description of Changes:			

Included Cable No.	Conductor Type	Area (mm2)
2475-4	72 Fiber, single mode fiber optic riser cable	323.65
Pull Rope	Soft-Fiber Polyester	0.00

Conduit/Tray No:	5912B	Reference:	E-836
Size:	103	Type:	Liquidtight flex metal conduit
From:	TOS Splice Cable Tray (SP#15E)	To:	2T41
Total Fill (mm2):	323.65	Remarks:	
Allowable Fill (mm2):	4339.96		
Description of Changes:			

Included Cable No.	Conductor Type	Area (mm2)
2475-4	72 Fiber, single mode fiber optic riser cable	323.65
Pull Rope	Soft-Fiber Polyester	0.00

Conduit/Tray No:	5922A	Reference:	E-836
Size:	103	Type:	Liquidtight flex metal conduit
From:	2T41	To:	TOS Splice Cable Tray (SP#16E)
Total Fill (mm2):	323.65	Remarks:	
Allowable Fill (mm2):	4339.96		
Description of Changes:			

Included Cable No.	Conductor Type	Area (mm2)
2475-4	72 Fiber, single mode fiber optic riser cable	323.65
Pull Rope	Soft-Fiber Polyester	0.00

Conduit/Tray No:	5922B	Reference:	E-836
Size:	103	Type:	Liquidtight flex metal conduit
From:	TOS Splice Cable Tray (SP#16E)	To:	2T41
Total Fill (mm2):	323.65	Remarks:	
Allowable Fill (mm2):	4339.96		
Description of Changes:			

Included Cable No.	Conductor Type	Area (mm2)
2475-4	72 Fiber, single mode fiber optic riser cable	323.65
Pull Rope	Soft-Fiber Polyester	0.00

Conduit/Tray No:	5932A	Reference:	E-836
Size:	103	Type:	Liquidtight flex metal conduit
From:	2T42	To:	TOS Splice Cable Tray (SP#17E)
Total Fill (mm2):	323.65	Remarks:	
Allowable Fill (mm2):	4339.96		
Description of Changes:			

Included Cable No.	Conductor Type	Area (mm2)
2475-4	72 Fiber, single mode fiber optic riser cable	323.65
Pull Rope	Soft-Fiber Polyester	0.00

Conduit/Tray No:	5932B	Reference:	E-836
Size:	103	Type:	Liquidtight flex metal conduit
From:	TOS Splice Cable Tray (SP#17E)	To:	2T42
Total Fill (mm2):	323.65	Remarks:	
Allowable Fill (mm2):	4339.96		
Description of Changes:			

Included Cable No.	Conductor Type	Area (mm2)
2475-4	72 Fiber, single mode fiber optic riser cable	323.65
Pull Rope	Soft-Fiber Polyester	0.00

NEW
CONDUIT AND TRAY SCHEDULE

E-1038

CALCULATED/ DESIGNED BY	CHECKED BY
SYC	FW
DATE 01/10	01/10
REVISED BY	DATE REVISED

DESIGN OVERSIGHT
BEHZAD GOLEMOHAMMADI

STATE OF CALIFORNIA - DEPARTMENT OF TRANSPORTATION
Caltrans

THIS PLAN ACCURATE FOR ELECTRICAL WORK ONLY.

FOR REDUCED PLANS ORIGINAL SCALE IS IN MILLIMETERS 0 20 40 60 80

DGN FILE =>04-0120f1_E-1038.dgn
USERNAME =>llorico

CU 04251

EA 0120F1

LAST REVISION 00-00-00
DATE PLOTTED => 06-MAY-2010
TIME PLOTTED => 18:47

DIST	COUNTY	ROUTE	KILOMETER POST TOTAL PROJECT	SHEET No	TOTAL SHEETS
04	SF, Ala	80	12.2/14.3 0.0/4.0	407a 10S40	1204

Syn Yee Chin 03/08/10
REGISTERED ELECTRICAL ENGINEER DATE

05-06-2010
PLANS APPROVAL DATE

REGISTERED PROFESSIONAL ENGINEER — SYN YEE CHIN No. 18186 Exp. 09/30/2011 ELECTRICAL — STATE OF CALIFORNIA

PB AMERICAS, Inc.
A Parsons Brinckerhoff Company
303 Second St., Suite 700N
San Francisco, CA 94107-1317

The State of California or its officers or agents shall not be responsible for the accuracy or completeness of electronic copies of this plan sheet.

Caltrans now has a web site! To get to the web site, go to http://www.dot.ca.gov

REQUEST FOR INFORMATION NOT ADDRESSED IN THIS CCO REMAIN IN FORCE

MARK	DATE	DESCRIPTIONS	BY	CH'D	CCO#
		REVISIONS			
0	03/08/10	MEP INTEGRATION	SYC	FW	110

CONTRACT CHANGE ORDER NO._____
SHEET _____ OF _____

Conduit/Tray No:	5942A	Reference:	E-836
Size:	103	Type:	Liquidtight flex metal conduit
From:	2T42	To:	TOS Splice Cable Tray (SP#18E)
Total Fill (mm2):	323.65	Remarks:	
Allowable Fill (mm2):	4339.96		
Description of Changes:			

Included Cable No.	Conductor Type	Area (mm2)
2475-4	72 Fiber, single mode fiber optic riser cable	323.65
Pull Rope	Soft-Fiber Polyester	0.00

Conduit/Tray No:	5942B	Reference:	E-836
Size:	103	Type:	Liquidtight flex metal conduit
From:	TOS Splice Cable Tray (SP#18E)	To:	2T42
Total Fill (mm2):	323.65	Remarks:	
Allowable Fill (mm2):	4339.96		
Description of Changes:			

Included Cable No.	Conductor Type	Area (mm2)
2475-4	72 Fiber, single mode fiber optic riser cable	323.65
Pull Rope	Soft-Fiber Polyester	0.00

Conduit/Tray No:	5962A	Reference:	E-836
Size:	103	Type:	Liquidtight flex metal conduit
From:	2T42	To:	TOS Splice Cable Tray (SP#20E)
Total Fill (mm2):	323.65	Remarks:	
Allowable Fill (mm2):	4339.96		
Description of Changes:			

Included Cable No.	Conductor Type	Area (mm2)
2475-4	72 Fiber, single mode fiber optic riser cable	323.65
Pull Rope	Soft-Fiber Polyester	0.00

Conduit/Tray No:	5962B	Reference:	E-836
Size:	103	Type:	Liquidtight flex metal conduit
From:	TOS Splice Cable Tray (SP#20E)	To:	2T42
Total Fill (mm2):	323.65	Remarks:	
Allowable Fill (mm2):	4339.96		
Description of Changes:			

Included Cable No.	Conductor Type	Area (mm2)
2475-4	72 Fiber, single mode fiber optic riser cable	323.65
Pull Rope	Soft-Fiber Polyester	0.00

Conduit/Tray No:	5972A	Reference:	E-836
Size:	103	Type:	Liquidtight flex metal conduit
From:	2T43	To:	TOS Splice Cable Tray (SP#21E)
Total Fill (mm2):	323.65	Remarks:	
Allowable Fill (mm2):	4339.96		
Description of Changes:			

Included Cable No.	Conductor Type	Area (mm2)
2475-4	72 Fiber, single mode fiber optic riser cable	323.65
Pull Rope	Soft-Fiber Polyester	0.00

Conduit/Tray No:	5972B	Reference:	E-836
Size:	103	Type:	Liquidtight flex metal conduit
From:	TOS Splice Cable Tray (SP#21E)	To:	2T43
Total Fill (mm2):	323.65	Remarks:	
Allowable Fill (mm2):	3275.44		
Description of Changes:			

Included Cable No.	Conductor Type	Area (mm2)
2475-4	72 Fiber, single mode fiber optic riser cable	323.65
Pull Rope	Soft-Fiber Polyester	0.00

Conduit/Tray No:	6502A	Reference:	E-663
Size:	103	Type:	Liquidtight flex metal conduit
From:	1T10	To:	15 kV Splice Cable Tray (Hinge AW)
Total Fill (mm2):	0.00	Remarks:	
Allowable Fill (mm2):	3275.44		
Description of Changes:			

Included Cable No.	Conductor Type	Area (mm2)
Pull Rope	Soft-Fiber Polyester	0.00

NEW
CONDUIT AND TRAY SCHEDULE

E-1039

THIS PLAN ACCURATE FOR ELECTRICAL WORK ONLY.

FOR REDUCED PLANS ORIGINAL SCALE IS IN MILLIMETERS 0 20 40 60 80

DGN FILE =>04-0120f1_E-1039.dgn
USERNAME =>llorico

CU 04251 EA 0120F1

DESIGN OVERSIGHT BEHZAD GOLEMOHAMMADI

CALCULATED/DESIGNED BY CHECKED BY

DATE 01/10 SYC FW

REVISED BY DATE REVISED

STATE OF CALIFORNIA - DEPARTMENT OF TRANSPORTATION Caltrans

LAST REVISION 00-00-00 DATE PLOTTED => 06-MAY-2010 TIME PLOTTED => 18:47

Conduit/Tray No:	6502B	Reference:	E-663
Size:	103	Type:	Liquidtight flex metal conduit
From:	15 kV Splice Cable Tray (Hinge AW)	To:	1T10
Total Fill (mm2):	2780.99	Remarks:	
Allowable Fill (mm2):	3275.44		
Description of Changes:			

Included Cable No.	Conductor Type	Area (mm2)
1391	3-1/C #4/0, 15 KV, EPR insulation	2780.99
Pull Rope	Soft-Fiber Polyester	0.00

Conduit/Tray No:	6523A	Reference:	E-663
Size:	103	Type:	Liquidtight flex metal conduit
From:	1T40	To:	TOS Splice Cable Tray (Hinge AW)
Total Fill (mm2):	0.00	Remarks:	
Allowable Fill (mm2):	3275.44		
Description of Changes:			

Included Cable No.	Conductor Type	Area (mm2)
Pull Rope	Soft-Fiber Polyester	0.00

Conduit/Tray No:	6523B	Reference:	E-663
Size:	103	Type:	Liquidtight flex metal conduit
From:	TOS Splice Cable Tray (Hinge AW)	To:	1T40
Total Fill (mm2):	323.65	Remarks:	
Allowable Fill (mm2):	4339.96		
Description of Changes:			

Included Cable No.	Conductor Type	Area (mm2)
1475-4	72 Fiber, single mode fiber optic riser cable	323.65
Pull Rope	Soft-Fiber Polyester	0.00

Conduit/Tray No:	6523C	Reference:	E-663
Size:	103	Type:	Liquidtight flex metal conduit
From:	1T40	To:	TOS Express Splice Cable Tray (Hinge AW)
Total Fill (mm2):	0.00	Remarks:	
Allowable Fill (mm2):	3275.44		
Description of Changes:			

Included Cable No.	Conductor Type	Area (mm2)
Pull Rope	Soft-Fiber Polyester	0.00

Conduit/Tray No:	6523D	Reference:	E-663
Size:	103	Type:	Liquidtight flex metal conduit
From:	TOS Express Splice Cable Tray (Hinge AW)	To:	1T40
Total Fill (mm2):	323.65	Remarks:	
Allowable Fill (mm2):	4339.96		
Description of Changes:			

Included Cable No.	Conductor Type	Area (mm2)
1477-3	72 Fiber, single mode fiber optic riser cable	323.65
Pull Rope	Soft-Fiber Polyester	0.00

Conduit/Tray No:	6530A	Reference:	E-663
Size:	103	Type:	Liquidtight flex metal conduit
From:	1T10	To:	15 kV Splice Cable Tray (Hinge BW)
Total Fill (mm2):	2780.99	Remarks:	
Allowable Fill (mm2):	3275.44		
Description of Changes:			

Included Cable No.	Conductor Type	Area (mm2)
1391	3-1/C #4/0, 15 KV, EPR insulation	2780.99
Pull Rope	Soft-Fiber Polyester	0.00

Conduit/Tray No:	6530B	Reference:	E-663
Size:	103	Type:	Liquidtight flex metal conduit
From:	15 kV Splice Cable Tray (Hinge BW)	To:	1T10
Total Fill (mm2):	2780.99	Remarks:	
Allowable Fill (mm2):	3275.44		
Description of Changes:			

Included Cable No.	Conductor Type	Area (mm2)
1391	3-1/C #4/0, 15 KV, EPR insulation	2780.99
Pull Rope	Soft-Fiber Polyester	0.00

NEW
CONDUIT AND TRAY SCHEDULE

THIS PLAN ACCURATE FOR ELECTRICAL WORK ONLY.

REQUEST FOR INFORMATION NOT ADDRESSED IN THIS CCO REMAIN IN FORCE

MARK	DATE	DESCRIPTIONS	BY	CH'D	CCO#
		REVISIONS			
0	03/08/10	MEP INTEGRATION	SYC	FW	110

CONTRACT CHANGE ORDER NO._____
SHEET _____ OF _____

DIST	COUNTY	ROUTE	KILOMETER POST TOTAL PROJECT	SHEET No	TOTAL SHEETS
04	SF,Ala	80	12.2/14.3 0.0/4.0	407a 10S41	1204

Syn Yee Chin 03/08/10
REGISTERED ELECTRICAL ENGINEER DATE

05-06-2010
PLANS APPROVAL DATE

REGISTERED PROFESSIONAL ENGINEER
SYN YEE CHIN
No. 18186
Exp. 09/30/2011
ELECTRICAL
STATE OF CALIFORNIA

PB AMERICAS, Inc.
A Parsons Brinckerhoff Company
303 Second St., Suite 700N
San Francisco, CA 94107-1317

The State of California or its officers or agents shall not be responsible for the accuracy or completeness of electronic copies of this plan sheet.

Caltrans now has a web site! To get to the web site, go to http://www.dot.ca.gov

DESIGN OVERSIGHT BEHZAD GOLEMOHAMMADI

CALCULATED/DESIGNED BY | CHECKED BY
SYC | FW
DATE 01/10 | 01/10
REVISED BY | DATE REVISED

STATE OF CALIFORNIA - DEPARTMENT OF TRANSPORTATION
Caltrans

DATE PLOTTED => 06-MAY-2010
TIME PLOTTED => 18:47

LAST REVISION 00-00-00

E-1040

FOR REDUCED PLANS ORIGINAL SCALE IS IN MILLIMETERS 0 20 40 60 80

DGN FILE =>04-0120f1_E-1040.dgn
USERNAME =>llorico

CU 04251 | EA 0120F1

DIST	COUNTY	ROUTE	KILOMETER POST TOTAL PROJECT	SHEET No	TOTAL SHEETS
04	SF, Ala	80	12.2/14.3 0.0/4.0	407a 10S42	1204

Syn Yee Chin 03/08/10
REGISTERED ELECTRICAL ENGINEER DATE

05-06-2010
PLANS APPROVAL DATE

REGISTERED PROFESSIONAL ENGINEER
SYN YEE CHIN
No. 18186
Exp. 09/30/2011
ELECTRICAL
STATE OF CALIFORNIA

PB AMERICAS, Inc.
A Parsons Brinckerhoff Company
303 Second St., Suite 700N
San Francisco, CA 94107-1317

The State of California or its officers or agents shall not be responsible for the accuracy or completeness of electronic copies of this plan sheet.

Caltrans now has a web site! To get to the web site, go to http://www.dot.ca.gov

REQUEST FOR INFORMATION NOT ADDRESSED IN THIS CCO REMAIN IN FORCE

MARK	DATE	REVISIONS DESCRIPTIONS	BY	CH'D	CCO#
0	03/08/10	MEP INTEGRATION	SYC	FW	110

CONTRACT CHANGE ORDER NO._____
SHEET _____ OF _____

Conduit/Tray No: 6586A | Reference: E-663
Size: 103 | Type: Liquidtight flex metal conduit
From: 1T11 | To: 15 kV Splice Cable Tray (Hinge CW)
Total Fill (mm2): 2780.99 | Remarks:
Allowable Fill (mm2): 3275.44
Description of Changes:

Included Cable No.	Conductor Type	Area (mm2)
1392	3-1/C #4/0, 15 KV, EPR insulation	2780.99
Pull Rope	Soft-Fiber Polyester	0.00

Conduit/Tray No: 6586B | Reference: E-663
Size: 103 | Type: Liquidtight flex metal conduit
From: 15 kV Splice Cable Tray (Hinge CW) | To: 1T11
Total Fill (mm2): 2780.99 | Remarks:
Allowable Fill (mm2): 3275.44
Description of Changes:

Included Cable No.	Conductor Type	Area (mm2)
1392	3-1/C #4/0, 15 KV, EPR insulation	2780.99
Pull Rope	Soft-Fiber Polyester	0.00

Conduit/Tray No: 6642A | Reference: E-663
Size: 103 | Type: Liquidtight flex metal conduit
From: 1T12 | To: 15 kV Splice Cable Tray (Hinge DW)
Total Fill (mm2): 2780.99 | Remarks:
Allowable Fill (mm2): 3275.44
Description of Changes:

Included Cable No.	Conductor Type	Area (mm2)
1392	3-1/C #4/0, 15 KV, EPR insulation	2780.99
Pull Rope	Soft-Fiber Polyester	0.00

Conduit/Tray No: 6642B | Reference: E-663
Size: 103 | Type: Liquidtight flex metal conduit
From: 15 kV Splice Cable Tray (Hinge DW) | To: 1T12
Total Fill (mm2): 2780.99 | Remarks:
Allowable Fill (mm2): 3275.44
Description of Changes:

Included Cable No.	Conductor Type	Area (mm2)
1392	3-1/C #4/0, 15 KV, EPR insulation	2780.99
Pull Rope	Soft-Fiber Polyester	0.00

Conduit/Tray No: 6936 | Reference: E-663
Size: 103 | Type: Liquidtight flex metal conduit
From: 1T13 | To: 15 kV Splice Cable Tray (Hinge EW)
Total Fill (mm2): 2780.99 | Remarks:
Allowable Fill (mm2): 3275.44
Description of Changes:

Included Cable No.	Conductor Type	Area (mm2)
1392	3-1/C #4/0, 15 KV, EPR insulation	2780.99
Pull Rope	Soft-Fiber Polyester	0.00

Conduit/Tray No: 6972A | Reference: E-663
Size: 103 | Type: Liquidtight flex metal conduit
From: 1T43 | To: TOS Splice Cable Tray (Hinge EW)
Total Fill (mm2): 323.65 | Remarks:
Allowable Fill (mm2): 4339.96
Description of Changes:

Included Cable No.	Conductor Type	Area (mm2)
1475-4	72 Fiber, single mode fiber optic riser cable	323.65
Pull Rope	Soft-Fiber Polyester	0.00

Conduit/Tray No: 6972B | Reference: E-663
Size: 103 | Type: Liquidtight flex metal conduit
From: TOS Splice Cable Tray (Hinge EW) | To: 1T43
Total Fill (mm2): 323.65 | Remarks:
Allowable Fill (mm2): 4339.96
Description of Changes:

Included Cable No.	Conductor Type	Area (mm2)
1475-5	72 Fiber, single mode fiber optic riser cable	323.65
Pull Rope	Soft-Fiber Polyester	0.00

NEW
CONDUIT AND TRAY SCHEDULE

E-1041

THIS PLAN ACCURATE FOR ELECTRICAL WORK ONLY.

FOR REDUCED PLANS ORIGINAL SCALE IS IN MILLIMETERS 0 20 40 60 80

DGN FILE =>04-0120f1_E-1041.dgn
USERNAME =>llorico

CU 04251 | EA 0120F1

DESIGN OVERSIGHT BEHZAD GOLEMOHAMMADI

CALCULATED/DESIGNED BY | CHECKED BY

DATE 01/10 | SYC | FW

REVISED BY | DATE REVISED

STATE OF CALIFORNIA - DEPARTMENT OF TRANSPORTATION
Caltrans

LAST REVISION 00-00-00
DATE PLOTTED => 06-MAY-2010
TIME PLOTTED => 18:47

DIST	COUNTY	ROUTE	KILOMETER POST TOTAL PROJECT	SHEET No	TOTAL SHEETS
04	SF, Ala	80	12.2/14.3 0.0/4.0	407a 10S43	1204

Syn Yee Chin 03/08/10
REGISTERED ELECTRICAL ENGINEER DATE

05-06-2010
PLANS APPROVAL DATE

REGISTERED PROFESSIONAL ENGINEER
SYN YEE CHIN
No. 18186
Exp. 09/30/2011
ELECTRICAL
STATE OF CALIFORNIA

PB AMERICAS, Inc.
A Parsons Brinckerhoff Company
303 Second St., Suite 700N
San Francisco, CA 94107-1317

The State of California or its officers or agents shall not be responsible for the accuracy or completeness of electronic copies of this plan sheet.

Caltrans now has a web site! To get to the web site, go to http://www.dot.ca.gov

REQUEST FOR INFORMATION NOT ADDRESSED IN THIS CCO REMAIN IN FORCE

MARK	DATE	REVISIONS DESCRIPTIONS	BY	CH'D	CCO#
0	03/08/10	MEP INTEGRATION	SYC	FW	110

CONTRACT CHANGE ORDER NO._____
SHEET _____ OF _____

Conduit/Tray No:	6973A	Reference:	E-663
Size:	103	Type:	Liquidtight flex metal conduit
From:	1T43	To:	TOS Express Splice Cable Tray (Hinge EW)
Total Fill (mm2):	323.65	Remarks:	
Allowable Fill (mm2):	4339.96		
Description of Changes:			

Included Cable No.	Conductor Type	Area (mm2)
1477-3	72 Fiber, single mode fiber optic riser cable	323.65
Pull Rope	Soft-Fiber Polyester	0.00

Conduit/Tray No:	6973B	Reference:	E-663
Size:	103	Type:	Liquidtight flex metal conduit
From:	TOS Express Splice Cable Tray (Hinge EW)	To:	1T43
Total Fill (mm2):	323.65	Remarks:	
Allowable Fill (mm2):	4339.96		
Description of Changes:			

Included Cable No.	Conductor Type	Area (mm2)
1477-4	72 Fiber, single mode fiber optic riser cable	323.65
Pull Rope	Soft-Fiber Polyester	0.00

Conduit/Tray No:	7476A	Reference:	E-836
Size:	103	Type:	Liquidtight flex metal conduit
From:	2T40	To:	TOS Splice Cable Tray (Hinge AE)
Total Fill (mm2):	0.00	Remarks:	
Allowable Fill (mm2):	3275.44		
Description of Changes:			

Included Cable No.	Conductor Type	Area (mm2)
Pull Rope	Soft-Fiber Polyester	0.00

Conduit/Tray No:	7476B	Reference:	E-836
Size:	103	Type:	Liquidtight flex metal conduit
From:	TOS Splice Cable Tray (Hinge AE)	To:	2T40
Total Fill (mm2):	323.65	Remarks:	
Allowable Fill (mm2):	4339.96		
Description of Changes:			

Included Cable No.	Conductor Type	Area (mm2)
2475-4	72 Fiber, single mode fiber optic riser cable	323.65
Pull Rope	Soft-Fiber Polyester	0.00

Conduit/Tray No:	7492A	Reference:	E-836
Size:	103	Type:	Liquidtight flex metal conduit
From:	2T10	To:	15 kV Splice Cable Tray (Hinge AE)
Total Fill (mm2):	0.00	Remarks:	
Allowable Fill (mm2):	3275.44		
Description of Changes:			

Included Cable No.	Conductor Type	Area (mm2)
Pull Rope	Soft-Fiber Polyester	0.00

Conduit/Tray No:	7492B	Reference:	E-836
Size:	103	Type:	Liquidtight flex metal conduit
From:	15 kV Splice Cable Tray (Hinge AE)	To:	2T10
Total Fill (mm2):	2780.99	Remarks:	
Allowable Fill (mm2):	3275.44		
Description of Changes:			

Included Cable No.	Conductor Type	Area (mm2)
2391	3-1/C #4/0, 15 KV, EPR insulation	2780.99
Pull Rope	Soft-Fiber Polyester	0.00

Conduit/Tray No:	7676A	Reference:	E-836
Size:	103	Type:	Liquidtight flex metal conduit
From:	2T43	To:	TOS Splice Cable Tray (Hinge EE)
Total Fill (mm2):	0.00	Remarks:	
Allowable Fill (mm2):	3275.44		
Description of Changes:			

Included Cable No.	Conductor Type	Area (mm2)
Pull Rope	Soft-Fiber Polyester	0.00

NEW
CONDUIT AND TRAY SCHEDULE

E-1042

THIS PLAN ACCURATE FOR ELECTRICAL WORK ONLY.

FOR REDUCED PLANS ORIGINAL SCALE IS IN MILLIMETERS 0 20 40 60 80

DGN FILE =>04-0120f1_E-1042.dgn
USERNAME =>llorico

CU 04251

EA 0120F1

DESIGN OVERSIGHT BEHZAD GOLEMOHAMMADI

CALCULATED/DESIGNED BY | CHECKED BY
SYC | FW
DATE 01/10 | 01/10
REVISED BY | DATE REVISED

STATE OF CALIFORNIA - DEPARTMENT OF TRANSPORTATION
Caltrans

LAST REVISION 00-00-00
DATE PLOTTED => 06-MAY-2010
TIME PLOTTED => 18:48

DIST	COUNTY	ROUTE	KILOMETER POST TOTAL PROJECT	SHEET No	TOTAL SHEETS
04	SF,Ala	80	12.2/14.3 0.0/4.0	407a 10S44	1204

Syn Yee Chin 03/08/10
REGISTERED ELECTRICAL ENGINEER DATE

05-06-2010
PLANS APPROVAL DATE

REGISTERED PROFESSIONAL ENGINEER SYN YEE CHIN No. 18186 Exp. 09/30/2011 ELECTRICAL STATE OF CALIFORNIA

PB AMERICAS, Inc.
A Parsons Brinckerhoff Company
303 Second St., Suite 700N
San Francisco, CA 94107-1317

The State of California or its officers or agents shall not be responsible for the accuracy or completeness of electronic copies of this plan sheet.

Caltrans now has a web site! To get to the web site, go to http://www.dot.ca.gov

Caltrans Metric

REQUEST FOR INFORMATION NOT ADDRESSED IN THIS CCO REMAIN IN FORCE

MARK	DATE	DESCRIPTIONS	BY	CH'D	CCO#
0	03/08/10	MEP INTEGRATION	SYC	FW	110

REVISIONS

CONTRACT CHANGE ORDER NO._____
SHEET _____ OF _____

Conduit/Tray No:	7676B	Reference:	E-836
Size:	103	Type:	Liquidtight flex metal conduit
From:	TOS Splice Cable Tray (Hinge EE)	To:	2T43
Total Fill (mm2):	0.00	Remarks:	
Allowable Fill (mm2):	3275.44		
Description of Changes:			

Included Cable No.	Conductor Type	Area (mm2)
Pull Rope	Soft-Fiber Polyester	0.00

Conduit/Tray No:	7681	Reference:	E-836
Size:	103	Type:	Liquidtight flex metal conduit
From:	2T13	To:	15 kV Splice Cable Tray (Hinge EE)
Total Fill (mm2):	2780.99	Remarks:	
Allowable Fill (mm2):	3275.44		
Description of Changes:			

Included Cable No.	Conductor Type	Area (mm2)
2392	3-1/C #4/0, 15 KV, EPR insulation	2780.99
Pull Rope	Soft-Fiber Polyester	0.00

Conduit/Tray No:	7926A	Reference:	E-836
Size:	103	Type:	Liquidtight flex metal conduit
From:	2T12	To:	15 kV Splice Cable Tray (Hinge DE)
Total Fill (mm2):	2780.99	Remarks:	
Allowable Fill (mm2):	3275.44		
Description of Changes:			

Included Cable No.	Conductor Type	Area (mm2)
2392	3-1/C #4/0, 15 KV, EPR insulation	2780.99
Pull Rope	Soft-Fiber Polyester	0.00

Conduit/Tray No:	7926B	Reference:	E-836
Size:	103	Type:	Liquidtight flex metal conduit
From:	15 kV Splice Cable Tray (Hinge DE)	To:	2T12
Total Fill (mm2):	2780.99	Remarks:	
Allowable Fill (mm2):	3275.44		
Description of Changes:			

Included Cable No.	Conductor Type	Area (mm2)
2392	3-1/C #4/0, 15 KV, EPR insulation	2780.99
Pull Rope	Soft-Fiber Polyester	0.00

NEW
CONDUIT AND TRAY SCHEDULE

E-1043

THIS PLAN ACCURATE FOR ELECTRICAL WORK ONLY.

STATE OF CALIFORNIA - DEPARTMENT OF TRANSPORTATION
Caltrans

DESIGN OVERSIGHT: BEHZAD GOLEMOHAMMADI

CALCULATED/DESIGNED BY: SYC DATE 01/10
CHECKED BY: FW 01/10
REVISED BY
DATE REVISED

DATE PLOTTED => 06-MAY-2010
TIME PLOTTED => 18:48
LAST REVISION 00-00-00

FOR REDUCED PLANS ORIGINAL SCALE IS IN MILLIMETERS 0 20 40 60 80

DGN FILE =>04-0120f1_E-1043.dgn
USERNAME =>llorico

CU 04251 EA 0120F1