DIST	COUNTY	ROUTE	KILOMETER POST TOTAL PROJECT	SHEET No	TOTAL SHEETS
04	SF,Ala	80	12.2/14.3 0.0/4.0	407a 09S71	1204

Syn Yee Chin 03/08/10
REGISTERED ELECTRICAL ENGINEER DATE

05-06-2010
PLANS APPROVAL DATE

REGISTERED PROFESSIONAL ENGINEER
SYN YEE CHIN
No. 18186
Exp. 09/30/2011
ELECTRICAL
STATE OF CALIFORNIA

PB AMERICAS, Inc.
A Parsons Brinckerhoff Company
303 Second St., Suite 700N
San Francisco, CA 94107-1317

The State of California or its officers or agents shall not be responsible for the accuracy or completeness of electronic copies of this plan sheet.

Caltrans now has a web site! To get to the web site, go to http://www.dot.ca.gov

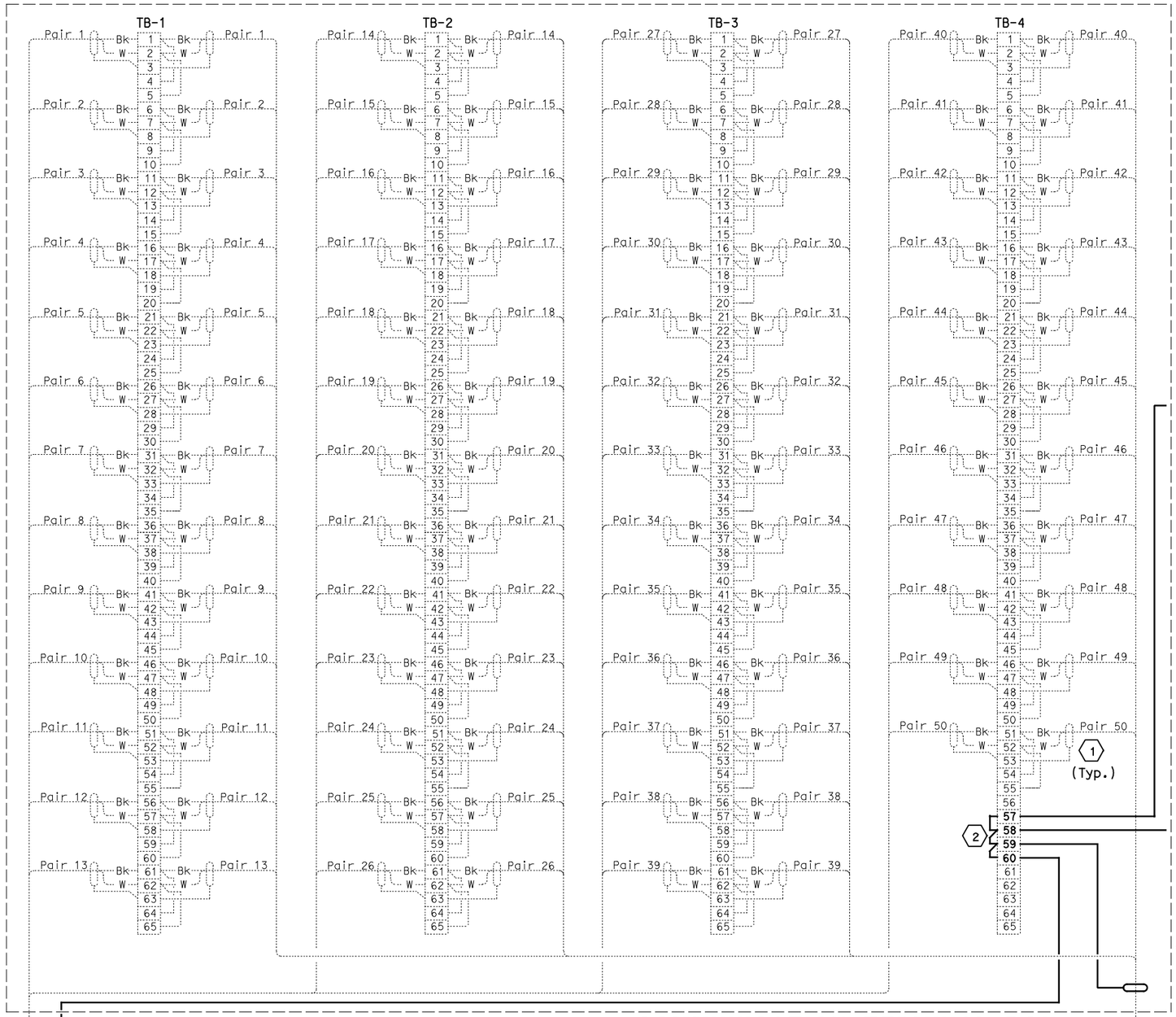

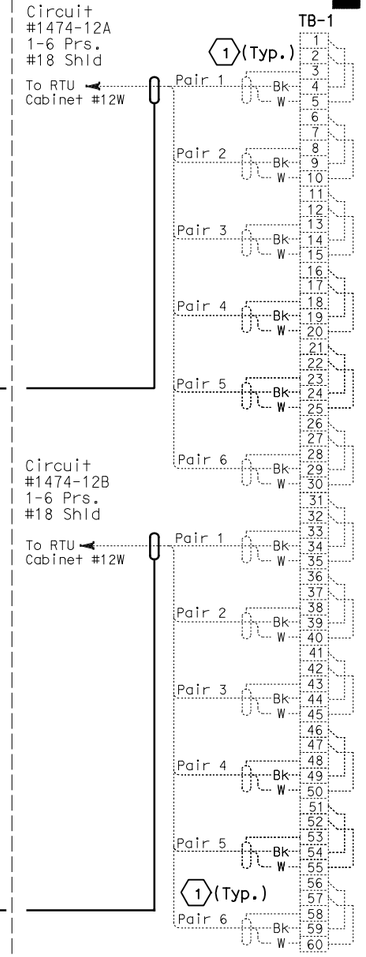

TYPICAL WIRING WITH CONNECTION TO SCADA RTU CABINET

Shown for COM-11W connecting to RTU-12W
(See Table A)

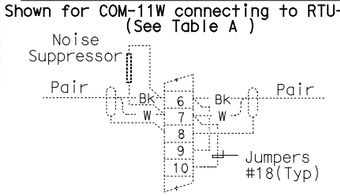

TYPICAL WIRING EACH PAIR

TABLE A

Westbound

Circuit No.	Cable Installed between:
1474-10	SCADA Comm. Term Boxes COM-8W and COM-9W
1474-11	SCADA Comm. Term Boxes COM-9W and COM-10W
1474-12	SCADA Comm. Term Boxes COM-10W and COM-11W
1474-12A	SCADA Comm. Term Box COM-11W and RTU #12W
1474-12B	SCADA Comm. Term Box COM-11W and RTU #12W
1474-13	SCADA Comm. Term Boxes COM-11W and COM-12W
1474-14	SCADA Comm. Term Boxes COM-12W and COM-13W
1474-14A	SCADA Comm. Term Boxes COM-SUB WB and RTU #13W
1474-14B	SCADA Comm. Term Boxes COM-SUB WB and RTU #13W
1474-15	SCADA Comm. Term Boxes COM-SUB WB and COM-14W
1474-16	SCADA Comm. Term Boxes COM-14W and COM-15W
1474-17	SCADA Comm. Term Boxes COM-15W and COM-16W
1474-17A	SCADA Comm. Term Boxes COM-16W and RTU #14W
1474-17B	SCADA Comm. Term Boxes COM-16W and RTU #14W
1474-18	SCADA Comm. Term Boxes COM-16W and COM-17W
1474-19	SCADA Comm. Term Boxes COM-17W and COM-18W
1474-20	SCADA Comm. Term Boxes COM-18W and COM-19W
1474-21	SCADA Comm. Term Boxes COM-19W and COM-20W
1474-21A	SCADA Comm. Term Boxes COM-20W and RTU #15W
1474-21B	SCADA Comm. Term Boxes COM-20W and RTU #15W
1474-22	SCADA Comm. Term Boxes COM-20W and COM-21W
1474-23	SCADA Comm. Term Boxes COM-13W and COM-SUB. WB
1474-24	SCADA Comm. Term Boxes COM-21W and COM-22W
1474-25	SCADA Comm. Term Boxes COM-22W and COM-23W
1474-25A	SCADA Comm. Term Boxes COM-MOLE and RTU #16
1474-25B	SCADA Comm. Term Boxes COM-MOLE and RTU #16
1474-26	SCADA Comm. Term Boxes COM-23W and COM-MOLE

Eastbound

Circuit No.	Cable Installed between:
2474-10	SCADA Comm. Term Boxes COM-8E and COM-9E
2474-11	SCADA Comm. Term Boxes COM-9E and COM-10E
2474-12	SCADA Comm. Term Boxes COM-10E and COM-11E
2474-12A	SCADA Comm. Term Box COM-11E and RTU #12E
2474-12B	SCADA Comm. Term Box COM-11E and RTU #12E
2474-13	SCADA Comm. Term Boxes COM-11E and COM-12E
2474-14	SCADA Comm. Term Boxes COM-12E and COM-13E
2474-14A	SCADA Comm. Term Boxes COM-SUB EB and RTU #13E
2474-14B	SCADA Comm. Term Boxes COM-SUB EB and RTU #13E
2474-15	SCADA Comm. Term Boxes COM-SUB EB and COM-14E
2474-16	SCADA Comm. Term Boxes COM-14E and COM-15E
2474-17	SCADA Comm. Term Boxes COM-15E and COM-16E
2474-17A	SCADA Comm. Term Boxes COM-16E and RTU #14E
2474-17B	SCADA Comm. Term Boxes COM-16E and RTU #14E
2474-18	SCADA Comm. Term Boxes COM-16E and COM-17E
2474-19	SCADA Comm. Term Boxes COM-17E and COM-18E
2474-20	SCADA Comm. Term Boxes COM-18E and COM-19E
2474-21	SCADA Comm. Term Boxes COM-19E and COM-20E
2474-21A	SCADA Comm. Term Boxes COM-20E and RTU #15E
2474-21B	SCADA Comm. Term Boxes COM-20E and RTU #15E
2474-22	SCADA Comm. Term Boxes COM-20E and COM-21E
2474-23	SCADA Comm. Term Boxes COM-13E and COM-SUB. EB
2474-24	SCADA Comm. Term Boxes COM-21E and COM-22E
2474-25	SCADA Comm. Term Boxes COM-22E and COM-23E
2474-26	SCADA Comm. Term Boxes COM-23E and COM-MOLE
2474-27	SCADA Comm. Term Boxes COM-MOLE and COM-OAKL. SUB
1201-25A	SCADA Comm. Term Boxes COM-OAKL. SUB and RTU #17
1201-25B	SCADA Comm. Term Boxes COM-OAKL. SUB. and RTU #17

COMMUNICATION TERMINAL BOX

Shown for COM-09W, See Table A

To Scada Communication Terminal Box COM-8W (Contract 04-012014)

Ckt. #1474-10
50 prs. #18, shielded
prs. with overall shield

To Scada Communication Terminal Box COM-10W

Ckt. #1474-11
50 prs. #18, shielded
prs. with overall shield

NOTES:

1. This plan sheet is a record drawing of the Skyway Structures SCADA Communications COM-09W and RTU Terminal Box #12W. The Contractor shall verify the existing installation. See sheet EE-372 from the Skyway Structures, contract No. 04-012024.

2. Contractor shall wire connection shown by bold lines.

SHEET NOTES:

(1) Verify that the shield is that not grounded.

(2) Do not ground shield.

(3) For Cable Circuit Numbers, see Table A.

THIS PLAN ACCURATE FOR ELECTRICAL WORK ONLY.

REQUEST FOR INFORMATION NOT ADDRESSED IN THIS CCO REMAIN IN FORCE

MARK	DATE	DESCRIPTIONS	BY	CH'D	CCO#
0	03/08/10	MEP INTEGRATION	JE	SYC	110

REVISIONS

CONTRACT CHANGE ORDER NO._____
SHEET _____ OF _____

DETAILS
SCADA REMOTE TERMINAL UNIT SYSTEM COMMUNICATION TERMINAL BOX WIRING DIAGRAM

NO SCALE

E-959

STATE OF CALIFORNIA - DEPARTMENT OF TRANSPORTATION
Caltrans

DESIGN OVERSIGHT
BEHZAD GOLEMOHAMMADI

CALCULATED/ DESIGNED BY	SYC	DATE 01/10	REVISED BY
CHECKED BY	FW	01/10	DATE REVISED

LAST REVISION 00-00-00
DATE PLOTTED => 06-MAY-2010
TIME PLOTTED => 19:11

FOR REDUCED PLANS ORIGINAL SCALE IS IN MILLIMETERS 0 20 40 60 80

DGN FILE =>04-0120f1_E-959.dgn
USERNAME =>llorico

CU 04251 EA 0120F1