DIST	COUNTY	ROUTE	KILOMETER POST TOTAL PROJECT	SHEET No	TOTAL SHEETS
04	SF,Ala	80	12.2/14.3 0.0/4.0	407a 09S50	1204

Syn Yee Chin 03/08/10
REGISTERED ELECTRICAL ENGINEER DATE

05-06-2010
PLANS APPROVAL DATE

REGISTERED PROFESSIONAL ENGINEER SYN YEE CHIN No. 18186 Exp. 09/30/2011 ELECTRICAL STATE OF CALIFORNIA

PB AMERICAS, Inc.
A Parsons Brinckerhoff Company
303 Second St., Suite 700N
San Francisco, CA 94107-1317

The State of California or its officers or agents shall not be responsible for the accuracy or completeness of electronic copies of this plan sheet.

Caltrans now has a web site! To get to the web site, go to http://www.dot.ca.gov

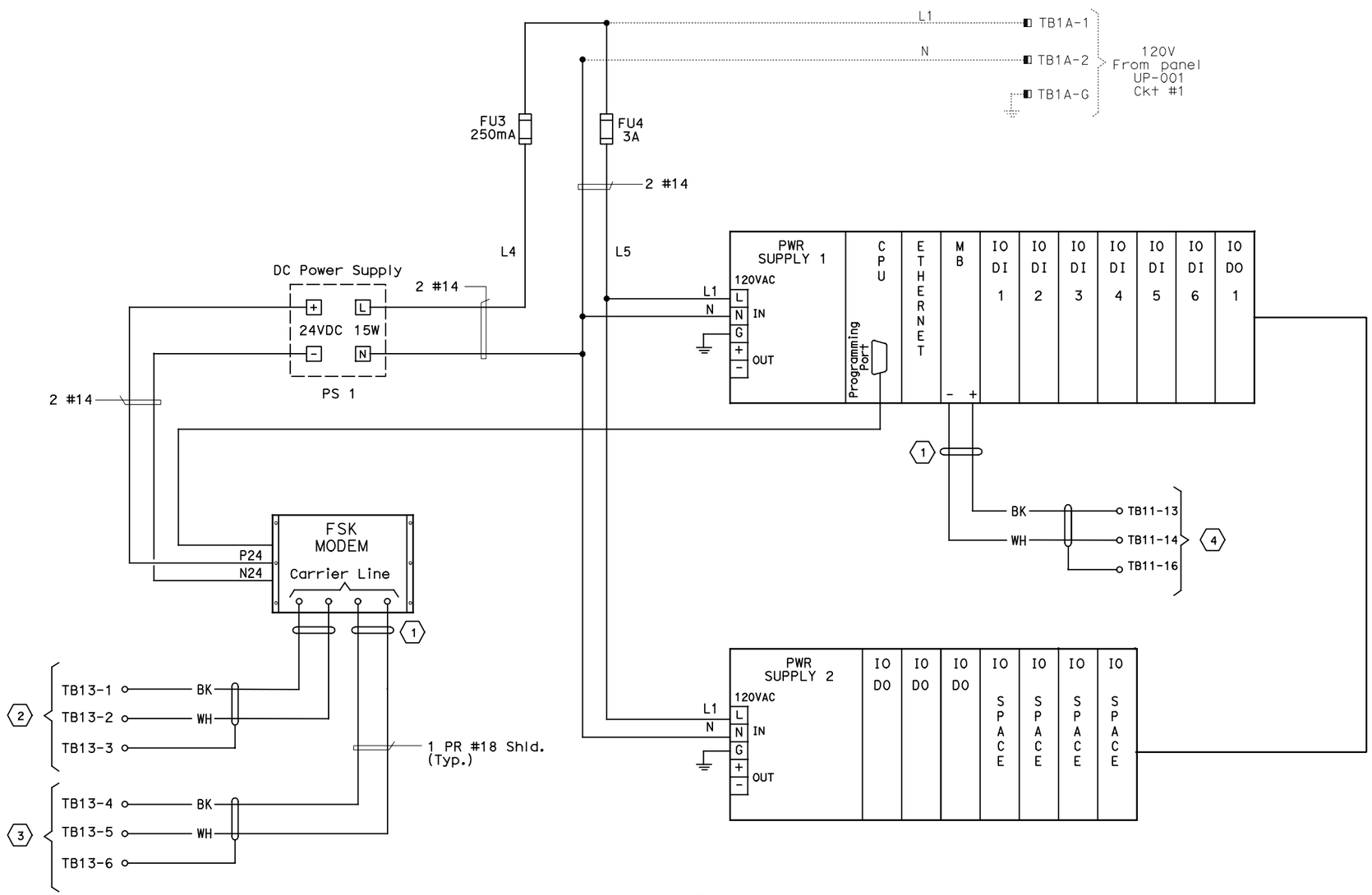

RTU #16 WIRING DIAGRAM

NOTES:

1. For RTU wiring see sheets E-942 through E-949.
2. For FSK to Modems interconnect wiring, see sheet E-902.
3. Contractor shall wire connection shown by bold lines.

SHEET NOTES:

(1) Contractor to tape shield. This circuit is not grounded at this end.

(2) Pair 7 of 50 pair SCADA cable

(3) Pair 8 of 50 pair SCADA cable.

(4) To management relay communication cable and Call Box Communications cable RS-485, see sheets E-950 and E-951.

REQUEST FOR INFORMATION NOT ADDRESSED IN THIS CCO REMAIN IN FORCE

MARK	DATE	DESCRIPTIONS	BY	CH'D	CCO#
0	03/08/10	MEP INTEGRATION	JE	FW	110

REVISIONS

CONTRACT CHANGE ORDER NO._____
SHEET _____ OF _____

DETAILS
SCADA REMOTE TERMINAL UNIT SYSTEM
RTU #16 WIRING DIAGRAM
NO SCALE

E-941

THIS PLAN ACCURATE FOR ELECTRICAL WORK ONLY.

STATE OF CALIFORNIA - DEPARTMENT OF TRANSPORTATION
Caltrans

DESIGN OVERSIGHT
BEHZAD GOLEMOHAMMADI

CALCULATED/DESIGNED BY | SYC | DATE 01/10 | REVISED BY
CHECKED BY | FW | 01/10 | DATE REVISED

LAST REVISION 00-00-00
DATE PLOTTED => 06-MAY-2010
TIME PLOTTED => 19:09